Construction

Construction Management Support Services

for

Terminal Island Maritime Support Facility and Terminal Island Grade Separation Projects

REQUEST FOR PROPOSALS

THE PORT
OF LOS ANGELES

September 30, 2025

RAMP ID #225482

September 30, 2025

Prospective Consultants:

SUBJECT: REQUEST FOR PROPOSALS FOR CONSTRUCTION MANAGEMENT SUPPORT SERVICES FOR TERMINAL ISLAND MARITIME SUPPORT FACILITY AND TERMINAL ISLAND GRADE SEPARATION PROJECTS

The City of Los Angeles Harbor Department (Harbor Department or Department) invites the submittal of proposals to provide construction management support services for Terminal Island Maritime Support Facility and Terminal Island Grade Separation Projects. These services shall commence after a contract is approved by the Board of Harbor Commissioners.

Instructions and forms to be used in preparing the qualifications are found in the information included in the Request for Proposals (RFP).

The schedule for this RFP will be as follows:

Request for Proposals Published	Tuesday, September 30, 2025
Questions Due	Tuesday, October 14, 2025 by 3pm
Responses Posted	Tuesday, October 28, 2025
Proposals Due	Wednesday, November 12, 2025 by 3pm

If your firm cannot agree to the requirements exactly as set forth in this RFP, please do not submit a proposal.

For questions regarding this RFP, please contact Susana Eldridge by email at Seldridge@portla.org. Questions must be submitted by Tuesday, October 14, 2025 by 3pm. Responses will be posted on the Harbor Department's website and the Regional Alliance Marketplace for Procurement (RAMP), at www.rampla.org, on Tuesday, October 28, 2025. It is the responsibility of all proposers to review both websites for any RFP revisions or answers to questions prior to submitting a proposal in order to ensure their proposal is complete and responsive.

In addition to providing information requested in this RFP, it should be noted that there are administrative documents that must be submitted with the proposal. Please refer to the Business Enterprise Programs and Contract Administrative Requirements section of this RFP. **In order for your proposal to be deemed responsive, these documents MUST be included with your proposal.**

All consultants and subconsultants must be registered on RAMP at the time proposals are due. If selected for award, for-profit companies and corporations must comply with RAMP's demographic reporting requirements, per the Mayor's Executive Directive 35.

Sincerely,

Susana Eldridge for

TRICIA J. CAREY
Director, Contracts and Purchasing Division

TABLE OF CONTENTS

1. INTRODUCTION 5
1.1 Brief Overview of the Projects 5
1.2 The Port of Los Angeles 5
2. PROJECT DESCRIPTIONS 6
2.1 Projects Scope of Work 7
2.2 Schedule of Work 17
3. PROPOSAL REQUIREMENTS 18
3.1 Proposal Questions 18
3.2 Proposal Submission 18
3.3 Evaluation Process and Selection Criteria 18
3.4 Proposal Content 19
3.5 Checklist for RFP Submittal Requirements 24
4. STANDARD CONTRACT PROVISIONS 25
4.1 Affirmative Action 25
4.2 Small/Very Small Business Enterprise Program and Local Business Preference Programs 25
4.3 Business Tax Registration Certificate 26
4.4 Indemnity and Insurance Requirements 26
4.5 Conflict of Interest 30
4.6 Compliance with Applicable Laws 30
4.7 Governing Law / Venue 30
4.8 Termination Provision 31
4.9 Proprietary Information 31
4.10 Trademarks, Copyrights, and Patents 32
4.11 Confidentiality 32
4.12 Notices 32
4.13 Termination Due to Non-Appropriation of Funds 32
4.14 Taxpayer Identification Number 33
4.15 Service Contractor Worker Retention Policy and Living Wage Policy Requirements 33
4.16 Wage and Earnings Assignment Orders/Notices of Assignments 33
4.17 Equal Benefits Policy 33
4.18 State Tidelands Grants 34
4.19 Contract Solicitations Charter Section 470 (c) (12) 34
4.20 Iran Contracting Act of 2010 34
4.21 Recordkeeping And Audit Rights 35

ATTACHMENTS / EXHIBITS

Exhibit A - Affirmative Action Program Provisions

Exhibit B – Small/Very Small Business Enterprise Program

Exhibit C – Proprietary Small Business Enterprise Application

Exhibit D - Business Tax Registration Certificate (BTRC) Number

Exhibit E - Equal Benefits Ordinance

Exhibit F - RFP Selection Evaluation Form

Exhibit G – City Ethics Commission (CEC) Forms 50 and 55

Exhibit H – Iran Contracting Act of 2010

Attachment 1 – Conceptual Site Plan

Attachment 2 – Project A (TIGS) Project Cost

Attachment 2 – Project B (TIMSF) Project Cost

Attachment 3 – Resource Schedule Project A (TIGS)

Attachment 3 – Resource Schedule Project B (TIMSF)

Spec 2844 TIMSF 80% Plans

Spec 2845 TIGS 80% Plans

1. INTRODUCTION

1.1 Brief Overview of the Projects

The Construction Division is soliciting proposals from qualified consultants to provide construction management support services for the Maritime Support Facility Access/Terminal Island Rail System Grade Separation (TIGS) and Terminal Island Maritime Support Facility (TIMSF) projects (Project or Projects). Consultants are invited to submit proposals for one or both Projects. If submitting for both Projects, separate proposals are required.

The TIGS Project will provide unimpeded access into the TIMSF. The TIMSF Project will develop the temporary support facility site, which was developed under emergency conditions to alleviate vessel congestion, into a permanent backland support facility. The proposed Projects are illustrated in Attachment 1.

The TIGS and TIMSF construction will adhere to Harbor Department Construction Division procedures and the TIGS construction will also adhere to Caltrans 2024 Standard Specifications.

The duration of the contract awarded as a result of this RFP is expected to be three years from the date of execution of the Agreement.

1.2 The Port of Los Angeles

The Port of Los Angeles is America's Port®, the nation's premier gateway for international commerce and the busiest seaport in the Western Hemisphere. Located in San Pedro Bay, 25 miles south of downtown Los Angeles, the Port encompasses 7,500 acres of land and water along 43 miles of waterfront.

The Port features both passenger and cargo terminals, including cruise, container, automobile, breakbulk, dry and liquid bulk, and warehouse facilities that manage billions of dollars' worth of cargo each year. One of the world's busiest seaports and leading gateway for international trade in North America, the Port of Los Angeles has ranked as the number one container port in the United States each year since 2000. In 2024, the Port handled a total of 10.3 million container units.

The Port of Los Angeles is a department of the City of Los Angeles (also known as the Los Angeles Harbor Department) and is governed by the Los Angeles Board of Harbor Commissioners (Board), a panel appointed by the Mayor of Los Angeles. Although the Port is a City department, it is not supported by City taxes. Operating as a landlord port with more than 200 leaseholders, the Port instead generates its revenues from leasing and shipping service fees. The Port's jurisdiction is limited to the Harbor District, which includes property in San Pedro, Wilmington, and Terminal Island.

2. PROJECT DESCRIPTIONS

Terminal Island Rail System Grade Separation

The proposed TIGS Project entails the following:

- Construction of a new four-lane grade separated roadway that shall span three (3) existing Port of Los Angeles mainline tracks, linking the intersection of Ferry Street and Terminal Way to the TIMSF. The new grade separation is currently envisioned to be constructed on fill material, retaining walls, and abutments, featuring a precast girder bridge.
- Modifications to the intersection of Ferry Street and Terminal Way to the new grade separated roadway, including the installation of a new and/or modified traffic signal.
- A new westbound on-ramp from Terminal Way to the new grade separated roadway, between the intersection of Ferry Street and Terminal Way and the existing Terminal Way grade separation.

This grade separation will provide access to the TIMSF, which is located at the former LAXT 80-acre site enclosed by a loop of three heavily used rail tracks. Current access to and from the site is severely limited and constrained via an existing at-grade rail crossing, and via a one-way tunnel with substandard vertical clearance which requires manual flagging operation for non-concurrent movement in one direction.

The Ports of Los Angeles and Long Beach completed a joint rail study in December 2020 using the current rail data and projections to identify future expansion needs over the next 25 years. Under opening year 2027 and year 2046 conditions, an estimated 1,325 and 3,030 trucks per day respectively, will be blocked by trains (moving and stationary) for about 10 hours per day. The completion of this Project will eliminate a significant truck access impediment into the TIMSF and connect the TIMSF to Terminal Way and Ferry Street.

The preliminary construction estimate for the TIGS Project is $31.4 million.

Terminal Island Maritime Support Facility

The proposed TIMSF entails the following:

- Redevelopment of the approximately 80 acres of new backland facility, which will include removals, contaminated soil removal, grading, paving, pavement markings, electrical and power infrastructure, high mast pole lighting, security fencing, stormwater drainage system, low impact development improvements, sewage system, potable water, and fire protection.
- Installation of three (3) new electrical charging stations using zero emission equipment.
- Construction of a roadability canopy, two (2) longshore restrooms, and two (2)

guard booths.
- Modifications to the existing tunnel access to the current facility for emergency use only.

The former LAXT 80-acre backland site at 740 Terminal Way in San Pedro, CA 90731 on Terminal Island will be used for a permanent chassis support facility and container storage for three separate operators. The facility will support activities such as chassis dispatch, stacking and storage, maintenance, other roadability services, and stop/start functionality. The backland will be linked to the rest of the Port of Los Angeles by the TIGS.

The Port of Los Angeles completed 23.3 acres of temporary site improvements (CMB pavement) and a rock drainage system to the existing 80-acre site in February 2022. This previous project was completed under an emergency development to help alleviate vessel congestion by providing additional storage areas to stack empty containers and chassis.

The preliminary construction estimate for the TIMSF Project is $156 million.

2.1 Projects Scope of Work

Services to be Performed by Consultant

Consultant shall provide construction management services, administration, and coordination for one or both of the Projects specified herein to facilitate timely and cost-effective completion of the work. All services in this Contract shall be known as “Basic Services” except those specifically described as “Other Services”.

In rendering the services required, Consultant shall comply with applicable laws and regulations and include necessary consultations and conferences with personnel of City, County, State, or Federal agencies, which may have jurisdiction over, or have any official interest in, the construction of the Projects, officers and employees of the City, representatives of Board, the Engineer, the Design Consultant and other entities, in order to determine all relevant requirements for and coordinate the construction of the Projects. Changes in laws or regulations which require Consultant to expend significant and substantial additional effort will be the basis for adjustment of Consultant’s compensation pursuant to the “Additional Services” provisions of this Agreement.

During construction phases and post-construction phase services, Consultant’s field office personnel will be provided offices in on-site field trailers provided by the contractor.

Task 1 Pre-Construction Services

Task 1.1 Constructability Review

Review the contract documents and determine the adequacy and completeness of the contract documents for both bidding and construction of the Project. Review shall consider information from the contract documents, reference documents, geotechnical and other reports, permits, and a site inspection. Identify particular risks, including conflicts,

errors or omissions in the contract documents, which could impact schedule, cost or quality of the work. Develop a preliminary construction schedule for completing the work within the time required in the contract documents considering interim milestones, phasing, and constraints, and compare to schedule developed by Design Consultant. Recommend liquidated damages, as appropriate.

Task 1.2 Construction Management Procedures

Obtain from the Engineer and review the latest edition of the Construction Division Procedures Manual. In consultation with the Engineer, determine and document the construction management and administrative procedures and processes to be utilized during the Project, including a document control system and the format of documents to be prepared by Consultant.

Task 1.3 Pre-Bid Meeting

Attend and participate in the meeting, prepare minutes and assist in resolution of issues and questions raised in the meeting.

Task 1.4 Bid Support

Manage and respond to inquiries from potential bidders in conjunction with the Designer and the Engineer.

Task 1.5 Bid Analysis

Review and evaluate bids received to assist in determining which bids are responsive and which bidder is the lowest, responsible bidder to whom award may be recommended.

Task 1.6 Staffing

Consultant shall be compensated for Pre-Construction Services in Tasks 1.1 through 1.5 on an hourly basis as defined in the Project Cost, Attachment 2. To complete these tasks, Consultant shall provide the following staff:

- Senior Construction Manager – half time
- Field/Office Engineer – half time
- Document Control/Clerical – half time

Task 2 Construction Services

Task 2.1 Construction Start-Up

Upon award of the construction contract and execution of the contract, perform services necessary for the start of construction including, but not limited to, coordinating and conducting initial scheduling meetings, pre-construction meeting(s), coordination meetings, and safety meetings, if applicable. Monitor and assist in the Contractor's acquisition of photo identification badges for Contractor personnel requiring unescorted access to secure areas. In consultation with the Department and the Contractor, develop

and disseminate emergency notification instructions.

Task 2.2 Contractor's Construction Schedule

The Contractor's baseline construction schedule shall show logical sequencing of construction activities and completion of the Project within the specified time limits. Contract documents generally require the base line schedule to be prepared with Oracle's Primavera P6 v7.0 or later. Consultant shall review the Contractor's construction schedule submittals and make appropriate written comments and recommendations. Schedule submittals review shall include all contractually required deliverables, including baseline schedule, work force, equipment and material resource loading, cash flow curves, and variance reports. Scheduling services shall include, but shall not be limited to, the following:

A. Review Contractor's baseline construction schedule for compliance with contract requirements, number of activities, logic and sequencing, duration of activities, procurement times and submittal review times, critical activities, milestones, and float. Prepare written comments and recommendations, especially regarding any potential omissions, conflicts or delays. Coordinate and conduct a construction scheduling meeting with the Contractor, critical subcontractors and the Engineer to review the construction schedule, comments and recommendations. If required, review the Contractor's baseline schedule re-submittal and make appropriate comments and recommendations until the baseline schedule is accepted by the Engineer.

B. Provide parallel schedules to the Contractor's monthly update schedules based on field observations and weekly (three-week look ahead) schedules. Review other schedule related submittals including workforce, equipment and material resource loading and cash flow projections for coordination with the baseline schedule. Prepare written comments and recommendations.

C. Review the updated or revised construction schedules submitted by Contractor in accordance with the Contract Documents. Based upon the Contractor's weekly schedule submittals, observations of Consultant and information from Daily Inspection Reports, Consultant shall verify actual activity dates and the remaining durations in the updates, and review and analyze forecasts of work force, equipment, and material resources, and cash flow projections. Consultant shall identify modifications and variations from the last approved schedule (logic, activities, durations, etc.) and prepare written comments and recommendations based on the schedule update analysis.

D. In instances where an update or revision to the construction schedule indicates an actual or potential delay of Project completion, Consultant shall advise the Engineer of available alternatives and, with approval of the Engineer, take appropriate actions. The Consultant shall review and analyze the Contractor's requests for time extensions, the cost of compensable delays, perform "what if' analyses to identify opportunities to mitigate delays, and provide appropriate comments and recommendations to the Engineer. The Consultant shall monitor and review the duration of the individual construction phases and recommend if liquidated damage assessments are warranted.

E. Consultant shall monitor the adequacy of Contractor's equipment and personnel resources, the performance of subcontractors and suppliers, and the availability of materials and supplies in relation to the work projected in the Project schedule forecasts.

Task 2.3 Project Meeting

Consultant shall prepare and distribute meeting notices and agenda and shall conduct regularly scheduled weekly job meetings with Contractor, Design Consultant's representatives, Department representatives, and such other City and governmental personnel as may be required to advance the timely progress of the Work. In addition, Consultant shall coordinate, conduct, and distribute minutes of other special meetings as required during construction. Consultant shall prepare, review and distribute the minutes of meetings within two working days.

Task 2.4 Change Orders / Authorities for Adjustment

Consultant shall arrange for and process all changes to the construction contract, including estimating costs, performing delay analyses, reviewing Contractor price quotations, negotiating costs, coordinating with the Design Consultant, and preparing change orders and Authorities for Adjustment in accordance with Department standards. Consultant shall also maintain a log and records of all changes.

Task 2.5 Shop Drawings, Materials and Samples

Consultant shall establish and implement procedures for review of shop drawings, materials, samples and other submittals by the Contractor. Consultant shall arrange for and process for review by the Design Consultant, the Department, and other agencies as applicable; all shop drawings, materials, samples, and other submittals by the Contractor. Consultant shall monitor the construction schedule to verify that submittals are made in accordance with the construction schedule and shall log and track all submittals. Review and processing of submittals is a priority activity. Every effort shall be made to return submittals within two weeks of receipt from Contractor.

Task 2.6 Requests for Information

Consultant shall arrange for and process such drawings and written memoranda as are necessary to either clarify the intent of the Contract Documents, and/or complete the same, between the Contractor, Design Consultant and the Engineer. The Consultant shall log and track all Requests for Information (RFIs) submitted by the Contractor. Reviewing and processing RFIs is a priority activity. Every effort shall be made to respond to Requests for Information within three days of receipt from Contractor.

Task 2.7 Internet-Based Project Management

The Consultant shall utilize an Internet-based project management system, PMWeb, for this Project. The Department will provide the Consultant access to the system, training, and further assistance if needed. PMWeb will be used to generate, coordinate, manage and transmit submittals, and Requests for Information. Project

correspondence shall also be uploaded into PMWeb. Correspondence shall include, but not be limited to:

- Fully executed Authority for Adjustments
- Fully executed Change Orders
- Requests for Quotes
- Meeting Minutes
- Field Memorandums generated by Department's field personnel
- Department Inspector's daily and weekly reports
- Site photos
- Project personnel directory
- Project Drawings and Specifications
- Records of conversations
- Record Drawings

Such folders and logs will be maintained daily in the field and periodically printed, distributed, and reviewed at weekly meetings.

PMWeb is an Internet-based project management system that provides a single repository for all project information as listed above, which may be expanded to include additional items.

Task 2.8 Other Internet-Based Systems

Consultant may be required to utilize other systems as directed by the Engineer. Such systems shall be provided by the Department.

Task 2.9 Document Control System

Consultant shall maintain a neat, organized filing system for all Project records, including contract document revisions, shop drawings, change orders, requests for information, field memos, contract clarifications, purchase orders, monthly progress payments, Contractor's construction schedules, correspondence and other related documents that are not required to be managed by PMWeb.

Task 2.10 Coordination

The purpose of coordination is to proactively cause the Work to be progressed in an efficient and effective manner in accordance with contract provisions, to anticipate, avoid or mitigate conflicts and adverse impacts, and to minimize the cost of the Work assigned to each entity, including the Department. Coordination for obtaining permits from various agencies for the Project is within the Scope of Work. Consultant shall perform Project coordination with respect to the following entities:

A. <u>Coordination of Project Team</u>
Los Angeles Harbor Department
Design Consultants and their associated subconsultants

B. <u>Coordination with Construction Contractor(s)</u>
Construction Contractor and its subcontractors

Other contractors on or adjacent to the Project site

C. Coordination with other Governmental Agencies
South Coast Air Quality Management District
Regional Water Quality Control Board
City of Los Angeles Department of Building and Safety
City of Los Angeles Department of Public Works
Los Angeles Department of Transportation

D. Coordination with Utilities
Water, power and telephone providers, petroleum companies
Other utility owners affected by the construction

E. Coordination with Adjacent Tenants
Adjacent tenants affected by the construction work or with a contractual interest in its completion

Task 2.11 Payment Requests

Consultant shall coordinate with Department Inspection and Contractor in the preparation, review, and recommendation for approval of all monthly progress payment request, including any quantity and cost breakdowns submitted by Contractor per the Project specifications.

Task 2.12 Monthly Progress Reports

Consultant shall provide to the Engineer monthly progress reports in a format and on a schedule as Engineer directs. Progress reports shall include, but not be limited to, a description of work completed, cumulative dollar costs incurred, as well as costs since the last progress report, anticipated work for the next reporting period, percentage of work complete, and the expected completion date for remaining work. The report shall identity problem areas and important issues that may affect Project cost and/or schedule. The report shall present actual percentage completion and cash flow versus planned percentage completion and cash flow both numerically and graphically.

Task 2.13 Accounting and Cost Control

Consultant shall monitor Project costs including, but not limited to:

A. Tracking of Contractor's monthly progress payments.
B. Tracking of proposed and final changes to the construction contract.
C. Review Contractor's monthly quantity and cost breakdowns with the Contractor's cost loaded schedule and provide comments and recommendations for the Engineer.
D. Tracking of Contractor's monthly quantities with respect to the approximate quantities in the construction contract.
E. Monitor and segregate costs for state or grant funded elements of Project, if any.
F. Tracking of Contractor's daily time and material sheets to ensure costs of changes do not exceed authorized amounts.

Task 2.14 Daily Log

Consultant shall maintain a daily log of jobsite events.

Task 2.15 Visual Media

Consultant shall compile and maintain an electronic file folder of Project progress and record photos and videos at appropriate times, including those supplied by Contractor(s) and/or other parties. Electronic files shall be stored in formats and file sizes using file-naming conventions deemed appropriate by the Engineer. Consultant will be required to forward files, as directed by the Engineer, at regular intervals, for inclusion into Harbor Department's master (including images and video from other projects) Web-based digital asset management system, and shall assist with cataloguing and categorizing photo and video assets.

Task 2.16 Site Representatives

Consultant shall provide on-site Construction Management staff for field visits through all phases of construction. Consultant shall furnish on-site representatives to assist the Department in monitoring and coordinating the operations and performance of Contractor by reviewing the sequence of work and directing, with Department approval, actions to mitigate actual or anticipated conflicts, interferences and delays so that Work is accomplished in accordance with the current, approved schedule. Consultant shall assist in resolution of construction problems that may require design changes, modifications, technical interpretations, or other actions. Consultant shall review and monitor Contractor's security and housekeeping practices and shall, with Department approval, coordinate plans for traffic and material flow.

Task 2.17 Quality Control

Consultant shall review the Contractor's quality control program and provide results of such review to the Department. Consultant shall also notify the Department of any instances of non-compliance with the Contractors quality control program of which the Consultant is aware, or becomes aware. The Consultant shall comply with the State of California Department of Transportation (CALTRANS) requirements as applicable to the Project including, but not limited to CALTRANS approval procedures, quality control, and quality assurance (for TIGS only). Consultant shall recommend remedial action to correct any unacceptable work of Contractor. Consultant shall also attend the final inspection and shall report the results and make appropriate recommendations to the Department concerning beneficial occupancy of the Project or any part thereof.

Task 2.18 Environmental Compliance and Stormwater Pollution Prevention Program Coordination

Consultant shall, while reporting to the Project Construction Manager for the Project, be familiar with all environmental compliance (within Project specification) requirements of each contractor and monitor that all compliance measures are met before, during, and after construction. Monitoring includes periodic audits of environmental compliance related- project files and preparation of required documents for eventual

submittal to the Harbor Department's Environmental Management Division. In addition, Consultant shall conduct environmental testing (soil, groundwater, etc.), monitoring and observations and prepare reports as required for construction of the Project

Consultant, while reporting to the Project Construction Manager for the Project, shall review the contractor's Stormwater Pollution Prevention Plan (SWPPP) and provide results of such review to City. The Consultant shall also monitor all SWPPP requirements are met before, during and after construction. Monitoring includes periodic field evaluation of installed Best Management Practices as detailed in the contractor's SWPPP and audit of the SWPPP document. Consultant shall also notify the Department of any instances of non-compliance with the SWPPP.

Task 2.19 Claims Management.

Consultant shall assist with the resolution of claims or actions arising during construction. Specifically, Consultant shall:

A. Maintain a potential claim file for any issue which may or will have a potential to result in a claim for additional time or cost;
B. Gather site and other relevant information relating to potential claims or actions including associated correspondence, reports and meeting minutes;
C. Direct and monitor time and materials work in conjunction with Department Inspectors for potential claims or changes to the construction contract;
D. Render assistance to the Department regarding any claim made or any litigation or action commenced which relates to construction of the Project including the review and investigation of all claims, and making written recommendation(s) regarding claim disposition; and
E. Assist the Department in negotiating resolution of such claims or actions.

Task 2.20 Specialized Scheduling Services

Consultant shall provide scheduling services necessary to assist with changes to the construction contract, and with the resolution of claims or actions arising during construction. Specifically, Consultant shall:

A. Perform delay analyses;
B. Render assistance to the Department regarding any claim made or any litigation or action commenced which relates to construction of the Project including the development of "what if' and "but for" scenarios and schedule analyses where appropriate, and making written recommendation(s) regarding claim disposition; and
C. Assist the Department in negotiating resolution of such claims or actions.

Task 2.21 Independent Estimating Services

Consultant shall provide estimating services necessary to assist with changes to the construction contract, and with the resolution of claims or actions arising during construction. Specifically, Consultant shall:

A. Review and analyze potential changes to the construction contract;

B. Provide independent estimates for proposed changes to the construction contract;
C. Review Contractor price quotations and assist with negotiating costs;
D. Render assistance to the Department regarding any claim made or any litigation or action commenced which relates to construction of the Project including the review and investigation of all claims; and
E. Assist the Department in negotiating resolution of such claims or actions.

Task 2.22 Safety Programs

Consultant shall review Contractor's health and safety plan and provide results of such review to City. Consultant shall also notify the Department of any instances of non-compliance with safety programs of which Consultant is aware, or becomes aware. Consultant shall not be required to make safety inspections nor shall Consultant have any responsibility for implementation of Contractor's safety program. Consultant shall have sole responsibility for implementation of its own safety program.

Task 2.23 Structure Representative/Engineer (for TIGS only)

Consultant certified by CALTRANS shall perform quality assurance over contractor's work that involves structures and perform the contract's necessary structure related administrative tasks on all phases of structure construction. Consultant shall review and approve structure related submittals, inspect each stage of structure construction with the Department and the Contractor prior to Department's acceptance or beneficial occupancy.

Task 2.24 City Furnished Materials

Consultant shall monitor and assist with the procurement of Department furnished equipment and materials, if any.

Task 2.25 Record Drawings

Consultant shall establish controls for, and monitor and report to the Department on the maintenance by Contractor of record drawings. The intent of said controls is to ensure the record drawings are maintained on a current basis and to authorize the monthly payment (if any) for maintenance of record drawings in accordance with the Project specifications.

Task 2.26 Staffing

Consultant shall be compensated for Construction Services in Tasks 2.1, 2.3 through 2.17, 2.24, and 2.25 in Fixed Fee amounts as defined in the Project Cost, Attachment 2. To complete these tasks, Consultant shall provide the following staff:

- Senior Construction Manager – full time
- Field/Office Engineer – full time
- Document Control/Clerical – full time

Task 3 Post Construction Services

Task 3.1 Project Close-Out Administration

Consultant shall provide construction contract closeout services and obtain, coordinate and transmit to the Department, Contractor-provided information such as guarantees, warranties, certifications, final permits, Record Drawings, releases, affidavits, operation and maintenance manuals and other items required by the Contract Documents. Consultant shall review preliminary and final punch lists prepared by the Design Consultant and/or Inspection and shall coordinate with the Contractor to complete all items. Consultant shall:

A. Coordinate, schedule and participate in a final inspection of the Project;
B. Schedule and coordinate all start-up and commissioning of equipment, including, but not limited to:
    1. Coordinate pre-start-up meeting with Contractor, Design Consultant and Department staff to confirm equipment is ready for testing/operation and the Contractor's plan for start-up;
    2. Observe, with the Design Consultant and Inspection, the field testing and adjustment of equipment;
    3. Ensure equipment operation and maintenance manuals have been submitted by the Contractor and accepted by the Engineer and Department operations and maintenance personnel;
    4. Coordinate instruction sessions for Department and/or tenant personnel in proper operation and maintenance of equipment; and
    5. If specialized maintenance is required, ensure that necessary maintenance contracts are in place to support start of operations.
C. Make recommendations that may be beneficial to the Department during initial operating period;
D. Negotiate final Authorities for Adjustment and obtain subcontractor releases;
E. Obtain and verify the completeness of the Contractor's record drawings and transmit them to the Department;
F. Perform warranty administration for warranty issues raised by operations and maintenance personnel; and
G. Upon completion and acceptance of the Project, deliver to the Department computer hardware/software and other equipment purchased through this Agreement and all Project documents and records, both in hard copy and electronic formats.

Task 3.2 Post-Mortem Report

In conjunction with the Engineer, coordinate a meeting with key team members, including the Design Consultant and Contractor, to identify particular problems, challenges and successes during the construction phase of the Project. Prepare a report of the findings and any recommendations regarding changes to policies and procedures to improve future performance.

Task 3.3 Staffing

Consultant shall be compensated for Post-Construction Services in Tasks 3.1 & 3.2 on an hourly basis as defined in the Project Cost, Attachment 2. To complete these tasks, Consultant shall provide the following staff:

- Senior Construction Manager – full time
- Field/Office Engineer – full time
- Document Control/Clerical – full time

Task 4 Other Services

The Engineer may require Consultant to perform optional services, as noted herein. Payment to Consultant for such optional services shall be as defined in the Project Cost, Attachment 2. Such services shall include, but not be limited to:

Task 4.1 Partnering Facilitation Services

Organize, sponsor and facilitate Partnering workshops, executive sessions, follow-up sessions and evaluation sessions with selected Department, Consultant and Contractor staff.

Task 4.2 Quality Assurance Services (for TIGS only)

Provide Acceptance Testing and Independent Quality Assurance services for work under CALTRANS Standard Specifications, as directed by the Engineer.

Task 4.3 Additional As-Needed Services

Provide other additional as-needed services for this Project, or other Department projects, as directed by the Engineer.

2.2 Schedule of Work

Following the first Notice to Proceed, the Consultant shall complete the Scope of Work as described in Section 2.2 for each phase of the Projects according to the following schedule:

Project A - TIGS

Pre-Construction Services:	4 months
Construction Services:	20 months
Post-Construction Services:	6 months
Total Contract Duration:	30 months

Project B - TIMSF

Pre-Construction Services:	4months
Construction Services:	24 months
Post-Construction Services:	6 months
Total Contract Duration:	34 months

3. PROPOSAL REQUIREMENTS

3.1 Proposal Questions

All questions regarding this RFP must be submitted, in writing, exclusively to Susana Eldridge, the Contract Administrator, at Seldridge@portla.org by no later than 3pm on Tuesday, October 14, 2025.

Attempts to contact any other Harbor Department employee or members of the Board of Harbor Commissioners, either directly or through third-parties acting for or on the proposer's behalf, may be presumed to constitute efforts to bias or influence the competitive process with information not detailed in the RFP and not available on an equal basis to all proposers. Accordingly, such attempts shall constitute grounds to disqualify the proposer undertaking them. Any information provided by the Contract Administrator to one proposer in response to questions shall be provided to all proposers.

3.2 Proposal Submission

One (1) digital copy of your proposal, as one complete file in .pdf format, must be submitted on or before 3pm PST on Wednesday, November 12, 2025 to:

Susana Eldridge at Seldridge@portla.org

Subject: Construction Management Support Services for Terminal Island Maritime Support Facility and Terminal Island Grade Separation Projects

Proposers solely are responsible for the timeliness of their submittals. As such, proposers are cautioned to budget adequate time to ensure that their proposals are delivered before the deadline set forth above.

By submitting a proposal, proposers certify that such proposal constitutes their full and complete written response to the RFP and evidences their acknowledgement that additional written material outside of such proposal shall not be considered by the City in connection with this RFP, unless the City provides a written request that they submit additional written materials. Absent such written request, proposers are instructed to not submit to the City written or other materials outside of the proposal, either in a subsequent interview or otherwise.

3.3 Evaluation Process and Selection Criteria

All proposals meeting the requirements of this RFP shall be reviewed and rated by an evaluation committee according to the following criteria: 1) firm qualifications, experience, and references; 2) Project organization, personnel, and staffing; 3) Project approach, work plan, management, and timeline; 4) rates, fees, and budget control; and 5) clarity and comprehensiveness of the proposal. See Exhibit F.

Selected proposers may be contacted to arrange in-person interviews with the evaluation committee. The evaluation committee will make the final recommendation for

selecting the Consultant. All recommendations are subject to the approval of the Chief Harbor Engineer, the Executive Director of the Harbor Department, and the Board of Harbor Commissioners.

Proposers are advised that all documentation submitted in response to this RFP will be considered property of the Harbor Department and may become available to the public as a public record and be released without further notification. Any information that the proposer considers confidential should not be submitted with the proposal.

The right to reject any and all proposals shall, in every case, be reserved, as shall the right to waive any informality in the proposal when to do so would be to the advantage of the City.

3.4 Proposal Content

The following items shall be included in your proposal:

1. Cover Transmittal Letter

Provide a narrative which introduces the firm and team highlighting the special strengths of the firm to perform the work requested in this RFP. The letter should be signed by an authorized principal of the proposing consulting firm.

2. Firm Qualifications, Experience and References

Provide a narrative describing the firm's qualifications to perform the Project work, including past (relevant) experience and at least three client references, with contact names and information. Include information regarding your firm's experience involving the size and level of complexity of the proposed Project. Qualifications and experience for proposed subconsultants should also be included.

Identify any members of your proposed team, including proposer's firm and any subconsultant firms, who are former Commissioners, officers or employees of the Harbor Department. Provide their name, proposed team position, and their past position and years of employment/appointment with the Department. If your proposed team does not have any such members, please include a statement in your proposal so stating.

Proposers are advised that it is a proposer's obligation to determine whether any conflicts of interest exist for their team members and the extent to which those conflicts need to be resolved or disclosed prior to engaging in business with the Department.

3. Project Organization, Personnel and Staffing

Provide a brief description of all key personnel and technical staff (including vendors, partners or subconsultants) to be involved and their relationship to the services to be provided.

- ☐ Include names, titles, licenses, certificates, fields of expertise, and relevant experience for all proposed personnel and staff.
- ☐ Identify the Project Manager for the proposed services.

- ☐ Complete resumes should be provided as part of an appendix to the proposal.
- ☐ Provide a project organization chart which depicts the organization of the project team, including reporting relationships to the Department's Project Manager and supervision of project team staff.
- ☐ Indicate the on-site availability for project manager as well as other staff during the lifetime of the project.

4. Project Approach and Work Plan

Provide a narrative which shows your firm's understanding of the Project's requirements and documents a logical technical approach to the project scope of work. Include a general work plan as well as the proposed approach to undertaking the scope of work described earlier in this RFP.

- ☐ Using the scope of work presented in this RFP, propose a work plan detailing major tasks and subtasks and the work to be conducted in each.
- ☐ If specific project team members or vendors are critical to specific tasks, identify where they will be utilized and/or committed.
- ☐ Include the results and deliverables expected from each major task.
- ☐ Identify appropriate assumptions and considerations that could impact the scope and timeline for completing each task.
- ☐ Provide a detailed equipment list for each application area with associated costs.
- ☐ Provide a detailed list of estimated expenses by category. Identify related considerations and assumptions for these expenses.

5. Project Management

Describe how your firm intends to manage all aspects of the work to be performed, including schedules for completion of tasks/subtasks, procedures for scheduling and cost control. The Project management proposal must include:

- ☐ Project kick off meeting
- ☐ Regularly scheduled project team meetings
- ☐ Written progress reports
- ☐ Issue/risk management techniques

6. Cost

Provide pricing and cost information for the Project. Include hourly rates for all proposed team members and a total Project cost. Also provide pricing for any proposed equipment, software, or hardware costs and any other related expenses for the Project. Discuss any budget control measures of your firm and proposed subconsultants.
Complete Attachment 2 – Method of Compensation and Attachment 3 – Resource Schedule and submit them with your proposal.

7. Business Enterprise Programs and Contract Administrative Requirements

In order for your proposal to be deemed responsive, the following documents <u>MUST</u> be included with your proposal:

A) SMALL/VERY SMALL BUSINESS ENTERPRISE (EXHIBIT B)

Provide with your proposal the Small/Very Small Business Enterprise Program Affidavit and Consultant Description forms (Exhibit B), fully filled out for your firm and any proposed subconsultants. Please refer to Exhibit B for detailed information relative to these programs and instructions on completing the forms.

The **mandatory** Small Business Enterprise (SBE) participation will be **25**%, including **5**% Very Small Business Enterprise (VSBE) participation. **Proposers who fail to demonstrate that they will meet or exceed the SBE requirements will be deemed non-responsive.** In order to ensure the highest participation of SBEs, VSBEs, Minority Business Enterprises, Women Business Enterprises, and Disabled Veteran Business Enterprises, all proposers shall utilize the RAMP to outreach to potential subconsultants.

Firms must be certified as SBEs or Very Small Business Enterprises (VSBE) through RAMP at the time proposals are due. **Firms will only receive credit for SBE/VSBE certifications reflected on their RAMP profile.** Firms may certify as SBE (Proprietary) and VSBE (Harbor) by completing the SBE (Proprietary) application (Exhibit C). Please refer to the Road Map in Exhibit C for a listing of agency certifications that may be accepted in lieu of completing the application. For VSBE certification, you must complete the application or be certified as a Micro-business through the State of California Department of General Services (DGS). If your firm is certified by one of the listed agencies, you must complete the instructions in the application in regards to obtaining certification on RAMP. Applications should be mailed to the following address referencing the RFP:

CITY OF LOS ANGELES
DEPARTMENT OF PUBLIC WORKS
Bureau of Contract Administration
Office of Contract Compliance – Centralized Certification Administration
1149 S. Broadway, Ste. 300
Los Angeles, CA 90015

B) INSURANCE VERIFICATION LETTER

Provide a letter from your firm indicating that the insurance requirements for this project as described in this RFP are presently part of your insurance coverage, or that your firm will be able to obtain such coverage should you be selected for award. The proposer must be aware of the indemnification requirements also set forth in this RFP. Proposers are not required to purchase the required insurance in order to respond; however, all required insurance will need to be submitted at the time of contract award. **ACORD® Certificate of Liability Insurance sheets submitted alone, without also including an insurance verification letter, will not be accepted. Proposals submitted without an insurance verification letter, as described above, will be deemed non-responsive.**

C) CITY ETHICS COMMISSION (CEC) FORMS 50 and 55

Proposers who submit a response to this solicitation (proposers) are subject to Charter section 470 (c) (12) and related ordinances. As a result, proposers may not make campaign contributions to and or engage in fundraising for certain elected City officials or candidates for elected City office from the time they submit the response until either the contract is approved or, for successful proposers, 12 months after the contract is signed. The proposer's principals and subcontractors performing $100,000 or more in work on the contract, as well as the principals of those subcontractors, are also subject to the same limitations on campaign contributions and fundraising.

Proposers must submit CEC Forms 50 and 55 to the awarding authority at the same time the response is submitted (See Exhibit G). The forms require proposers to identify their principals, their subcontractors performing $100,000 or more in work on the contract, and the principals of those subcontractors. Proposers must also notify their principals and subcontractors in writing of the restrictions and include the notice in contracts with subcontractors. Responses submitted without completed CEC Forms 50 and 55 may be deemed non-responsive. Proposers who fail to comply with City law may be subject to penalties, termination of contract, and debarment. Additional information regarding these restrictions and requirements may be obtained from the City Ethics Commission at (213) 978-1960 or ethics.lacity.org.

D) IRAN CONTRACTING ACT OF 2010

In accordance with California Public Contract Code Sections 2200-2208, all proposers submitting proposals for, entering into, or renewing contracts with the Harbor Department for goods and services estimated at $1,000,000 or more are required to complete, sign, and submit the Iran Contracting Act of 2010 Compliance Affidavit (See Exhibit H).

E) ACCEPTANCE OF STANDARD CONTRACT PROVISIONS AND EXECUTIVE DIRECTIVE 35

Proposers are advised that pursuant to Executive Directive (ED) 35, if your firm is a for-profit company or corporation and is selected for award, you shall, within 30 days of the effective date of the contract and on an annual basis thereafter (i.e., within 30 days of the anniversary of the effective date of the contract), report the following information to the City via the Regional Alliance Marketplace for Procurement (RAMP) or via another method specified by the City:

- Annual revenue
- Number of employees
- Location
- Industry
- Race/ethnicity and gender of majority owner

On an annual basis, the Consultant shall further request that any subconsultant input or update its business profile, with the above information, on RAMP or via another method prescribed by City.

Proposers must submit a signed letter confirming their intention to comply with the RAMP demographic reporting requirements of ED 35, and their firm's acceptance of all of the Standard Contract Provisions exactly as set forth in Section 4. Do not submit your demographic information in the letter; only the selected Consultant needs to enter that information into RAMP, after contract award.

3.5 Checklist for RFP Submittal Requirements

A checklist is provided to assist in verification that all elements of the RFP have been addressed. However, firms are encouraged to review the entirety of the RFP, including the Standard Contract Provisions section, to ensure full compliance and not rely solely on this checklist.

- ☐ Cover transmittal letter, signed by an authorized principal of the proposing consulting firm.
- ☐ Table of Contents, if included (not required).
- ☐ Proposal with the following sections, in order:
  - Firm Qualifications, Experience and References
  - Project Organization, Personnel and Staffing
  - Project Approach and Work Plan
  - Project Management
  - Cost
- ☐ Attachment 2 – Method of Compensation
- ☐ Attachment 3 – Resource Schedule
- ☐ Resumes for all proposed staff personnel provided in an appendix.
- ☐ Small/Very Small Business Enterprise Program form:
  - Affidavit of Company Status (**Prime**)
  - Consultant Description Form (**Prime and any subconsultants**)
- ☐ Letter from your firm indicating your ability to meet the insurance requirements for this project as described in Section 4.4 of the RFP. **Do not submit an ACORD® Certificate of Liability Insurance sheet alone; it must be submitted with an insurance verification letter.**
- ☐ CEC Form 50 (Bidder Certification)
- ☐ CEC Form 55 (Prohibited Contributors (Bidders))
- ☐ Iran Contracting Act of 2010 Compliance Affidavit
- ☐ Letter of acceptance of Standard Contract Provisions and Executive Directive 35

4. STANDARD CONTRACT PROVISIONS

The following sections are standard contract provisions for the Harbor Department. In submitting a proposal, proposer agrees to accept these terms without change. **If your firm cannot agree to the following requirements, exactly as set forth below, please do not submit a proposal.**

4.1 Affirmative Action

Consultant, during the performance of the Agreement, shall not discriminate in its employment practices against any employee or applicant for employment because of the employee's or applicant's race, religion, national origin, ancestry, sex, age, sexual orientation, disability, marital status, domestic partner status, or medical condition. The provisions of Section 10.8.4 of the Los Angeles Administrative Code shall be incorporated and made a part of the Agreement. All subcontracts awarded shall contain a like nondiscrimination provision. See Exhibit A.

4.2 Small/Very Small Business Enterprise Program and Local Business Preference Programs

It is the policy of the Department to provide Small Business Enterprises (SBE), Very Small Business Enterprises (VSBE), Minority-Owned, Women-Owned, Disabled Veteran-Owned and all Other Business Enterprises (MBE/WBE/DVBE/OBE) an equal opportunity to participate in the performance of all City contracts in all areas where such contracts afford such participation opportunities. Consultant shall assist the City in implementing this policy and shall use its best efforts to afford the opportunity for SBEs, VSBEs, MBEs, WBEs, DVBEs, and OBEs to achieve participation in subcontracts where such participation opportunities present themselves and attempt to ensure that all available business enterprises, including SBEs, VSBEs, MBEs, WBEs, DVBEs, and OBEs, have equal participation opportunity which might be presented under this Agreement. See Exhibit B.

It is also the policy of the Department to support an increase in local and regional jobs. The Department's Local Business Preference Program aims to benefit the Southern California region by increasing jobs and expenditures within the local and regional private sector. Consultant shall assist the City in implementing this policy and shall use its best efforts to afford the opportunity for Local Business Enterprises to achieve participation in subcontracts where such participation opportunities present themselves. See Exhibit B.

NOTE: Prior to being awarded a contract with the Harbor Department, all consultants and subconsultants must be registered on the City's Contracts Management and Opportunities Database, Regional Alliance Marketplace for Procurement (RAMP), at http://www.RAMPLA.org. Consultant shall comply with all RAMP reporting requirements set forth in Executive Directive No. 35 (August 25, 2022), Equitable Access to Contracting Opportunities, during the term of this Agreement.

4.3 Business Tax Registration Certificate

The City of Los Angeles, Office of Finance requires the implementation and enforcement of Los Angeles Municipal Code Section 21.09 et seq. This section provides that every person, other than a municipal employee, who engages in any business within the City of Los Angeles, is required to obtain the necessary Business Tax Registration Certificate and pay business taxes. The City Controller has determined that this Code Section applies to consulting firms that are doing work for the Los Angeles Harbor Department. See Exhibit D.

4.4 Indemnity and Insurance Requirements

REQUIRED AT PROPOSAL STAGE: A letter from each proposer must be provided with their proposal. The letter should indicate that the requirements below are presently part of the proposer's insurance coverage or that the proposer will be able to obtain such coverage should they be selected for award. The proposer must be aware of the indemnification requirements below. Proposers are not required to purchase the required insurance in order to respond; however, all required insurance will need to be submitted at the time of contract award. **ACORD® certificates submitted without an insurance verification letter will not be accepted.**

1. Indemnification

Except for the sole negligence or willful misconduct of the City, or any of its Boards, Officers, Agents, Employees, Assigns and Successors in Interest, Contractor undertakes and agrees to defend, indemnify and hold harmless the City and any of its Boards, Officers, Agents, Employees, Assigns, and Successors in Interest from and against all suits and causes of action, claims, losses, demands and expenses, including, but not limited to, attorney's fees (both in house and outside counsel) and cost of litigation (including all actual litigation costs incurred by the City, including but not limited to, costs of experts and consultants), damages or liability of any nature whatsoever, for death or injury to any person, including Contractor's employees and agents, or damage or destruction of any property of either party hereto or of third parties, arising in any manner by reason of the negligent acts, errors, omissions or willful misconduct incident to the performance of this Contract by Contractor or its subcontractors of any tier. Rights and remedies available to the City under this provision are cumulative of those provided for elsewhere in this Contract and those allowed under the laws of the United States, the State of California, and the City.

2. Acceptable Evidence and Approval of Insurance

Electronic submission is the required method of submitting insurance documents. Consultant's insurance broker or agent shall register with the City's online insurance compliance system **KwikComply** at http://kwikcomply.org and follow the instructions to register and submit the appropriate proof of insurance on Consultant's behalf.

Carrier Requirements

All insurance which Consultant is required to provide pursuant to this Agreement

shall be placed with insurance carriers authorized to do business in the State of California and which are rated A-, VII or better in Best's Insurance Guide. Carriers without a Best's rating shall meet comparable standards in another rating service acceptable to City.

Primary Coverage

The coverages submitted must be primary with respect to any insurance or self insurance of the City of Los Angeles Harbor Department. The City of Los Angeles Harbor Department's program shall be excess of this insurance and non-contributing.

Notice Of Cancellation

For each insurance policy described below, the Consultant shall give the Board of Harbor Commissioners a 10-days prior notice of cancellation or reduction in coverage for nonpayment of premium, and a 30-days prior notice of cancellation or reduction in coverage for any other reason, by written notice via registered mail and addressed to the City of Los Angeles Harbor Department, Attention Risk Manager and the City Attorney's Office, 425 S. Palos Verdes Street, San Pedro, California 90731.

Modification of Coverage

Executive Director, at his or her discretion, based upon recommendation of independent insurance consultants to City, may increase or decrease amounts an types of insurance coverage required hereunder at any time during the term hereof by giving ninety (90) days' written notice to Consultant.

Renewal of Policies

At least thirty (30) days prior to the expiration of any policy, Consultant shall direct their insurance broker or agent to submit to the City's online insurance compliance system **KwikComply** at http://kwikcomply.org a renewal certificate showing that the policy has been renewed or extended or, if new insurance has been obtained, evidence of insurance as specified below. If Consultant neglects or fails to secure or maintain the insurance required below, Executive Director may, at his or her own option but without any obligation, obtain such insurance to protect the City's interests. The cost of such insurance will be deducted from the next payment due Consultant.

Policy Copies

Upon request by City, Consultant shall furnish a copy of the binder of insurance and/or full certified policy for any insurance policy required herein. This requirement shall survive the termination or expiration of this Agreement.

Limits of Coverage

If the Consultant maintains higher limits than the minimums shown below, City requires and shall be entitled to coverage for the higher limits maintained by the Consultant. Any available insurance proceeds in excess of the specified minimum limits of insurance and coverage shall be available to City.

Right to Self-Insure

Upon written approval by Executive Director, Consultant may self-insure if the following conditions are met:

a. Consultant has a formal self-insurance program in place prior to execution of this Agreement. If a corporation, Consultant must have a formal resolution of its board of directors authorizing self-insurance.

b. Consultant agrees to protect the City, its boards, officers, agents and employees at the same level as would be provided by full insurance with respect to types of coverage and minimum limits of liability required by this Agreement.

c. Consultant agrees to defend the City, its boards, officers, agents and employees in any lawsuit that would otherwise be defended by an insurance carrier.

d. Consultant agrees that any insurance carried by Department is excess of Consultant's self-insurance and will not contribute to it.

e. Consultant provides the name and address of its claims administrator.

f. Consultant submits its most recently filed 10-Q and its 10-K or audited annual financial statements for the three most recent fiscal years prior to the Executive Director's consideration of approval of self-insurance and annually thereafter.

g. Consultant agrees to inform Department in writing immediately of any change in its status or policy which would materially affect the protection afforded Department by this self-insurance.

h. Consultant has complied with all laws pertaining to self-insurance.

Insurance

In addition to and not as a substitute for, or limitation of, any of the indemnity obligations imposed by [Indemnification Section Above], Consultant shall procure and maintain at its sole cost and expense and keep in force during the term of this Agreement the following insurance:

3. General Liability Insurance

Consultant shall procure and maintain in effect throughout the term of this Agreement, without requiring additional compensation from the City, commercial general liability insurance covering personal and advertising injury, bodily injury, and property damage providing contractual liability, independent contractors, products and completed operations, and premises/operations coverage written by an insurance company authorized to do business in the State of California rated VII, A- or better in Best's Insurance Guide (or an alternate guide acceptable to City if Best's is not available) within

Consultant's normal limits of liability but not less than One Million Dollars ($1,000,000) combined single limit for injury or claim. Where Consultant provides or dispenses alcoholic beverages, Host Liquor Liability coverage shall be provided as above. Where Consultant provides pyrotechnics, Pyrotechnics Liability shall be provided as above. Said limits shall provide first dollar coverage except that Executive Director may permit a self-insured retention or self-insurance in those cases where, in his or her judgment, such retention or self-insurance is justified by the net worth of Consultant. The retention or self-insurance provided shall provide that any other insurance maintained by Department shall be excess of Consultant's insurance and shall not contribute to it. In all cases, regardless of any deductible or retention, said insurance shall contain a defense of suits provision and a severability of interest clause. Additionally, each policy shall include an additional insured endorsement (CG 2010 or equivalent) naming the City of Los Angeles Harbor Department, its officers, agents and employees as Primary additional insureds.

Where Consultant's operations involve work within 50 feet of railroad track, Consultant's Commercial General Liability coverage shall also have the railroad exclusion deleted.

4. Automobile Liability Insurance

Consultant shall procure and maintain at its expense and keep in force at all times during the term of this Agreement, automobile liability insurance written by an insurance company authorized to do business in the State of California rated VII, A- or better in Best's Insurance Guide (or an alternate guide acceptable to City if Best's is not available) within Consultant's normal limits of liability but not less than One Million Dollars ($1,000,000) covering damages, injuries or death resulting from each accident or claim arising out of any one claim or accident. Said insurance shall protect against claims arising from actions or operations of the insured, or by its employees. Coverage shall contain a defense of suits provision. Additionally, each policy shall include an additional insured endorsement (CG 2010 or equivalent) naming the City of Los Angeles Harbor Department, its officers, agents and employees as Primary additional insureds.

5. Professional Liability Insurance

Consultant is required to provide Professional Liability insurance with respect to negligent or wrongful acts, errors or omissions, or failure to render services in connection with the professional services to be provided under this "Agreement". This insurance shall protect against claims arising from professional services of the insured, or by its employees, agents, or contractors, and includes coverage (or no exclusion) for contractual liability. Consultant certifies that it now has professional liability insurance in the amount of One Million Dollars ($1,000,000), which covers work to be performed pursuant to this Agreement and that it will keep such insurance or its equivalent in effect at all times during performance of said Agreement and until two (2) years following the completed term of the Agreement. Notice of occurrences of claims under the policy shall be made to the City Attorney's office with copies to Risk Management.

6. Workers' Compensation and Employer's Liability

Where applicable, Consultant shall comply with the provisions of Section 3700 of the California Labor code which requires every employer to be insured against liability for Workers' Compensation or to undertake self-insurance in accordance with the provisions of that Code, and that the Consultant shall comply with such provisions before commencing the performance of the tasks under this Agreement. Coverage for claims under U.S. Longshore and Harbor Workers' Compensation Act, if required under applicable law, shall be included. Consultant shall submit Workers' Compensation policies whether underwritten by the state insurance fund or private carrier, which provide that the public or private carrier waives it right of subrogation against the City in any circumstance in which it is alleged that actions or omissions of the City contributed to the accident. Such worker's compensation and occupational disease requirements shall include coverage for all employees of Consultant, and for all employees of any subcontractor or other vendor retained by Consultant.

4.5 Conflict of Interest

It is hereby understood and agreed that the parties to this Agreement have read and are aware of the provisions of Section 1090 et seq. and Section 87100 et seq. of the California Government Code relating to conflict of interest of public officers and employees, as well as the Los Angeles Municipal Code (LAMC) Municipal Ethics and Conflict of Interest provisions of Section 49.5.1 et seq. and the Conflict of Interest Codes of the City and Department. All parties hereto agree that they are unaware of any financial or economic interest of any public officer or employee of City relating to this Agreement. Notwithstanding any other provision of this Agreement, it is further understood and agreed that if such financial interest does exist at the inception of this Agreement, City may immediately terminate this Agreement by giving written notice thereof.

During the term of this Agreement, Consultant shall inform the Department when Consultant, or any of its subconsultants, employs or hires in any capacity, and for any length of time, a person who has worked for the Department as a Commissioner, officer or employee. Said notice shall include the individual's name and current position and their prior position and years of employment with the Department. Notice shall be provided by Consultant to the Department within thirty (30) days of the employment or hiring of the individual.

4.6 Compliance with Applicable Laws

Consultant shall at all times in the performance of its obligations comply with all applicable laws, statutes, ordinances, rules and regulations, and with the reasonable requests and directions of the Executive Director.

4.7 Governing Law / Venue

This Agreement shall be governed by and construed in accordance with the laws of the State of California, without reference to the conflicts of law, rules and principles of such State. The parties agree that all actions or proceedings arising in connection with this Agreement shall be tried and litigated exclusively in the State or Federal courts located in

the County of Los Angeles, State of California, in the judicial district required by court rules.

4.8 Termination Provision

The Board of Harbor Commissioners, in its sole discretion, shall be able to terminate and cancel all or any part of the Agreement it enters into with the selected Consultant for any reason upon giving the Consultant ten (10) days' notice in writing of its election to cancel and terminate the Agreement. It is agreed that any Agreement entered into shall not limit the right of the City to hire additional consultants to perform the services described in the Agreement either during or after the term of the Agreement.

4.9 Proprietary Information

1. Writings, as that term is defined in Section 250 of the California Evidence Code (including, without limitation, drawings, specifications, estimates, reports, records, reference material, data, charts, documents, renderings, computations, computer tapes or disks, submittals and other items of any type whatsoever, whether in the form of writing, figures or delineations), which are obtained, generated, compiled or derived in connection with this Agreement (collectively hereafter referred to as "property"), are owned by City as soon as they are developed, whether in draft or final form. City has the right to use or permit the use of property and any ideas or methods represented by such property for any purpose and at any time without compensation other than that provided in this Agreement. Consultant hereby warrants and represents that City at all times owns rights provided for in this section free and clear of all third-party claims whether presently existing or arising in the future, whether or not presently known. Consultant need not obtain for City the right to use any idea, design, method, material, equipment or other matter which is the subject of a valid patent, unless such patent is owned by Consultant or one of its employees, or its subconsultant or the subconsultant's employees, in which case such right shall be obtained without additional compensation. Whether or not Consultant's initial proposal or proposals made during this Agreement are accepted by City, it is agreed that all information of any nature whatsoever connected with the Scope of Work, regardless of the form of communication, which has been or may be given by Consultant, its subconsultants or on either's behalf, whether prior or subsequent to this Agreement becoming effective, to the City, its boards, officers, agents or employees, is not given in confidence. Accordingly, City or its designees may use or disclose such information without liability of any kind, except as may arise under valid patents.

2. If research or development is furnished in connection with this Agreement and if, in the course of such research or development, patentable work product is produced by Consultant, its officers, agents, employees, or subconsultants, the City shall have, without cost or expense to it, an irrevocable, non-exclusive royalty-free license to make and use, itself or by anyone on its behalf, such work product in connection with any activity now or hereafter engaged in or permitted by City. Upon City's request, Consultant, at its sole cost and expense, shall promptly furnish or obtain from the appropriate person a form of license satisfactory to the City. It is expressly understood and agreed that, as between City and Consultant, the referenced license shall arise for City's benefit immediately upon the production of the work product, and is not dependent on the written license specified above. City may transfer such license to its successors in the operation or ownership of any real or personal property now or hereafter owned or operated by City.

4.10 Trademarks, Copyrights, and Patents

Consultant agrees to save, keep, hold harmless, protect and indemnify the City and any of its officers or agents from any damages, cost, or expenses in law or equity from infringement of any patent, trademark, service mark or copyright of any person or persons, or corporations in consequence of the use by City of any materials supplied by Consultant in the performance of this Agreement.

4.11 Confidentiality

The data, documents, reports or other materials which contain information relating to the review, documentation, analysis and evaluation of the work described in this Agreement and any recommendations made by Consultant relative thereto shall be considered confidential and shall not be reproduced, altered, used or disseminated by Consultant or its employees or agents in any manner except and only to the extent necessary in the performance of the work under this Agreement. In addition, Consultant is required to safeguard such information from access by unauthorized personnel.

4.12 Notices

In all cases where written notice is to be given under this Agreement, service shall be deemed sufficient if said notice is deposited in the United States mail, postage paid. When so given, such notice shall be effective from the date of mailing of the same. For the purposes hereof, unless otherwise provided by notice in writing from the respective parties, notice to the Department shall be addressed to _____, Los Angeles Harbor Department, P.O. Box 151, San Pedro, California, 90733-0151, and notice to Consultant shall be addressed to it at the address set forth above. Nothing herein contained shall preclude or render inoperative service of such notice in the manner provided by law.

4.13 Termination Due to Non-Appropriation of Funds

This Agreement is subject to the provisions of the Los Angeles City Charter which, among other things, precludes the City from making any expenditure of funds or incurring any liability, including contractual commitments, in excess of the amount appropriated thereof.

The Board, in awarding this Agreement, is expected to appropriate sufficient funds to meet the estimated expenditure of funds through June 30 of the current fiscal year and to make further appropriations in each succeeding fiscal year during the life of the Agreement. However, the Board is under no legal obligation to do so.

The City, its boards, officers, and employees are not bound by the terms of this Agreement or obligated to make payment thereunder in any fiscal year in which the Board does not appropriate funds therefore. The Consultant is not entitled to any compensation in any fiscal year in which funds have not been appropriated for the Agreement by the Board.

Although the Consultant is not obligated to perform any work under the Agreement

in any fiscal year in which no appropriation for the Agreement has been made, the Consultant agrees to resume performance of the work required by the Agreement on the same terms and conditions for a period of sixty (60) days after the end of the fiscal year if an appropriation therefore is approved by the Board within that 60 day period. The Consultant is responsible for maintaining all insurance and bonds during this 60 day period until the appropriation is made; however, such extension of time is not compensable.

If in any subsequent fiscal year funds are not appropriated by the Board for the work required by the Agreement, the Agreement shall be terminated. However, such termination shall not relieve the parties of liability for any obligation previously incurred.

4.14 Taxpayer Identification Number

The Internal Revenue Service (IRS) requires that all consultants and suppliers of materials and supplies provide a TIN to the party that pays them. Consultant declares that it has an authorized TIN which shall be provided to the Department prior to payment under the Agreement. No payments will be made under the Agreement without a valid TIN.

4.15 Service Contractor Worker Retention Policy and Living Wage Policy Requirements

The Board of Harbor Commissioners of the City of Los Angeles adopted Resolution Nos. 19-8419 and 19-8420 on January 24, 2019, adopting the provisions of Los Angeles City Ordinance No. 185356, relating to Service Contractor Worker Retention (SCWR), Section 10.36 et seq. of the Los Angeles Administrative Code, as the policy of the Department. Further, Charter Section 378 requires compliance with the City's Living Wage requirements as set forth by ordinance, Section 10.37 et seq. of the Los Angeles Administrative Code. Consultant shall comply with the policy wherever applicable. Violation of this provision, where applicable, shall entitle the City to terminate this Agreement and otherwise pursue legal remedies that may be available.

4.16 Wage and Earnings Assignment Orders/Notices of Assignments

Consultant and/or any subconsultant are obligated to fully comply with all applicable state and federal employment reporting requirements for the Consultant and/or subconsultant's employees.

Consultant and/or any subconsultant shall certify that the principal owner(s) are in compliance with any Wage and Earnings Assignment Orders and Notices of Assignments applicable to them personally. Consultant and/or any subconsultant will fully comply with all lawfully served Wage and Earnings Assignment Orders and Notices of Assignments in accordance with Cal. Family Code § 5230 et seq. Consultant or any subconsultant will maintain such compliance throughout the term of the Agreement.

4.17 Equal Benefits Policy

The Board of Harbor Commissioners of the City of Los Angeles adopted Resolution

No. 6328 on January 12, 2005, agreeing to adopt the provisions of Los Angeles City Ordinance 172,908, as amended, relating to Equal Benefits, Section 10.8.2.1 et seq. of the Los Angeles Administrative Code, as a policy of the Harbor Department. Consultant shall comply with the policy wherever applicable. Violation of the policy shall entitle the City to terminate any Agreement with Consultant and pursue any and all other legal remedies that may be available. See Exhibit E.

4.18 State Tidelands Grants

The Agreement will be entered into in furtherance of and as a benefit to the State Tidelands Grant and the trust created thereby. Therefore, the Agreement will at all times be subject to the limitations, conditions, restrictions and reservations contained in and prescribed by the Act of the Legislature of the State of California entitled "An Act Granting to the City of Los Angeles the Tidelands and Submerged Lands of the State Within the Boundaries of Said City," approved June 3, 1929, (Stats. 1929, Ch. 651), as amended, and provisions of Article VI of the Charter of the City of Los Angeles relating to such lands. Consultant agrees that any interpretation of the Agreement and the terms contained therein must be consistent with such limitations, conditions, restrictions and reservations.

4.19 Contract Solicitations Charter Section 470 (c) (12)

Persons who submit a response to this solicitation (proposers) are subject to Charter section 470 (c) (12) and related ordinances. As a result, proposers may not make campaign contributions to and or engage in fundraising for certain elected City officials or candidates for elected City office from the time they submit the response until either the contract is approved or, for successful proposers, 12 months after the contract is signed. The proposer's principals and subcontractors performing $100,000 or more in work on the contract, as well as the principals of those subcontractors, are also subject to the same limitations on campaign contributions and fundraising.

Proposers must submit CEC form 50 and 55 to the awarding authority at the same time the response is submitted (See Exhibit G). The form requires proposers to identify their principals, their subcontractors performing $100,000 or more in work on the contract, and the principals of those subcontractors. Proposers must also notify their principals and subcontractors in writing of the restrictions and include the notice in contracts with subcontractors. Responses submitted without a completed CEC Form 55 may be deemed nonresponsive. Proposers who fail to comply with City law may be subject to penalties, termination of contract, and debarment. Additional information regarding these restrictions and requirements may be obtained from the City Ethics Commission at (213) 978-1960 or ethics.lacity.org.

4.20 Iran Contracting Act of 2010

The California Legislature adopted the Iran Contracting Act of 2010 to respond to policies of Iran in a uniform fashion (PCC § 2201(q)). The Iran Contracting Act prohibits proposers engaged in investment activities in Iran from submitting proposals for, or entering into or renewing contracts with public entities for goods and services of one million dollars ($1,000,000) or more (PCC § 2203(a)). In accordance with California Public Contract Code Sections 2200-2208, all proposers submitting proposals for, entering into,

or renewing contracts with the Harbor Department for goods and services estimated at $1,000,000 or more are required to complete, sign, and submit the Iran Contracting Act of 2010 Compliance Affidavit (See Exhibit H).

4.21 Recordkeeping And Audit Rights

A. Consultant shall keep and maintain full, complete and accurate books of accounts and records of the services performed under this Agreement in accordance with generally accepted accounting principles consistently applied, which books and records shall be readily accessible to and open for inspection and copying at the premises by City, its auditors or other authorized representatives. Notwithstanding any other provision of this Agreement, failure to do so shall constitute a conclusive waiver of any right to compensation for such services as are otherwise compensable hereunder. Such books and records shall be maintained by Consultant for a period of three (3) years after completion of services to be performed under this Agreement or until all disputes, appeals, litigation or claims arising from this Agreement have been resolved.

B. During the term of this Agreement, City may audit, review and copy any and all writings (as that term is defined in Section 250 of the California Evidence Code) of Consultant and subconsultants arising from or related to this Agreement or performance of the Scope of Work, whether such writings are (a) in final form or not, (b) prepared by Consultant, subconsultants or any individual or entity acting for or on behalf of Consultant or a subconsultant, and (c) without regard to whether such writings have previously been provided to City. Consultant shall be responsible for obtaining access to and providing writings of subconsultants. Consultant shall provide City at Consultant's sole cost and expense a copy of all such writings within fourteen (14) calendar days of a written request by City. City's right shall also include inspection at reasonable times of the Consultant's office or facilities which are engaged in the performance of the Scope of Work. Consultant shall, at no cost to City, furnish reasonable facilities and assistance for such review and audit. Consultant's failure to comply with this Article 6 shall constitute a material breach of this Agreement and shall entitle City to withhold any payment due under this Agreement until such breach is cured.

EXHIBIT A - AFFIRMATIVE ACTION PROGRAM PROVISIONS

Sec. 10.8.4 Affirmative Action Program Provisions.

Every non-construction and construction Contract with, or on behalf of, the City of Los Angeles for which the consideration is $25,000 or more shall contain the following provisions which shall be designated as the AFFIRMATIVE ACTION PROGRAM provisions of such Contract:

A. During the performance of a City Contract, the Contractor certifies and represents that the Contractor and each Subcontractor hereunder will adhere to an Affirmative Action Program to ensure that in its employment practices, persons are employed and employees are treated equally and without regard to or because of race, color, religion, national origin, ancestry, sex, sexual orientation, age, disability, marital status, domestic partner status or medical condition.

1. This section applies to work or services performed or materials manufactured or assembled in the United States.

2. Nothing in this section shall require or prohibit the establishment of new classifications of employees in any given craft, work or service category.

3. The Contractor shall post a copy of Paragraph A., hereof, in conspicuous places at its place of business available to employees and applicants for employment.

B. The Contractor shall, in all solicitations or advertisements for employees placed, by or on behalf of, the Contractor, state that all qualified applicants will receive consideration for employment without regard to their race, color, religion, national origin, ancestry, sex, sexual orientation, age, disability, marital status, domestic partner status or medical condition.

C. At the request of the Awarding Authority or the DAA, the Contractor shall certify on an electronic or hard copy form to be supplied, that the Contractor has not discriminated in the performance of City Contracts against any employee or applicant for employment on the basis or because of race, color, religion, national origin, ancestry, sex, sexual orientation, age, disability, marital status, domestic partner status or medical condition.

D. The Contractor shall permit access to, and may be required to provide certified copies of, all of its records pertaining to employment and to its employment practices by the Awarding Authority or the DAA for the purpose of investigation to ascertain compliance with the Affirmative Action Program provisions of City Contracts and, upon request, to provide evidence that it has or will comply therewith.

E. The failure of any Contractor to comply with the Affirmative Action Program provisions of City Contracts may be deemed to be a material breach of a City Contract. The failure shall only be established upon a finding to that effect by the Awarding Authority, on the basis of its own investigation or that of the DAA. No finding shall be made except upon a full and fair hearing after notice and an opportunity to be heard has been given to the Contractor.

F. Upon a finding duly made that the Contractor has breached the Affirmative Action Program provisions of a City Contract, the Contract may be forthwith cancelled, terminated or suspended, in whole or in part, by the Awarding Authority, and all monies

due or to become due hereunder may be forwarded to and retained by the City of Los Angeles. In addition thereto, the breach may be the basis for a determination by the Awarding Authority or the Board of Public Works that the Contractor is a non-responsible bidder or proposer pursuant to the provisions of Section 10.40 of this Code. In the event of such determination, the Contractor shall be disqualified from being awarded a contract with the City of Los Angeles for a period of two years, or until he or she shall establish and carry out a program in conformance with the provisions hereof.

G. In the event of a finding by the Fair Employment and Housing Commission of the State of California, or the Board of Public Works of the City of Los Angeles, or any court of competent jurisdiction, that the Contractor has been guilty of a willful violation of the California Fair Employment and Housing Act, or the Affirmative Action Program provisions of a City Contract, there may be deducted from the amount payable to the Contractor by the City of Los Angeles under the contract, a penalty of ten dollars for each person for each calendar day on which the person was discriminated against in violation of the provisions of a City Contract.

H. Notwithstanding any other provisions of a City Contract, the City of Los Angeles shall have any and all other remedies at law or in equity for any breach hereof.

I. The Public Works Board of Commissioners shall promulgate rules and regulations through the DAA and provide to the Awarding Authorities electronic and hard copy forms for the implementation of the Affirmative Action Program provisions of City contracts, and rules and regulations and forms shall, so far as practicable, be similar to those adopted in applicable Federal Executive Orders. No other rules, regulations or forms may be used by an Awarding Authority of the City to accomplish this contract compliance program.

J. Nothing contained in City Contracts shall be construed in any manner so as to require or permit any act which is prohibited by law.

K. By affixing its signature to a Contract that is subject to this article, the Contractor shall agree to adhere to the provisions in this article for the duration of the Contract. The Awarding Authority may also require Contractors and suppliers to take part in a pre-registration, pre-bid, pre-proposal, or pre-award conference in order to develop, improve or implement a qualifying Affirmative Action Program.

1. The Contractor certifies and agrees to immediately implement good faith effort measures to recruit and employ minority, women and other potential employees in a non-discriminatory manner including, but not limited to, the following actions as appropriate and available to the Contractor's field of work. The Contractor shall:

(a) Recruit and make efforts to obtain employees through:

(i) Advertising employment opportunities in minority and other community news media or other publications.

(ii) Notifying minority, women and other community organizations of employment opportunities.

(iii) Maintaining contact with schools with diverse populations of students to notify them of employment opportunities.

(iv) Encouraging existing employees, including minorities and women, to refer their friends and relatives.

(v) Promoting after school and vacation employment opportunities for minority, women and other youth.

(vi) Validating all job specifications, selection requirements, tests, etc.

(vii) Maintaining a file of the names and addresses of each worker referred to the Contractor and what action was taken concerning the worker.

(viii) Notifying the appropriate Awarding Authority and the DAA in writing when a union, with whom the Contractor has a collective bargaining agreement, has failed to refer a minority, woman or other worker.

(b) Continually evaluate personnel practices to assure that hiring, upgrading, promotions, transfers, demotions and layoffs are made in a non-discriminatory manner so as to achieve and maintain a diverse work force.

(c) Utilize training programs and assist minority, women and other employees in locating, qualifying for and engaging in the training programs to enhance their skills and advancement.

(d) Secure cooperation or compliance from the labor referral agency to the Contractor's contractual Affirmative Action Program obligations.

(e) Establish a person at the management level of the Contractor to be the Equal Employment Practices officer. Such individual shall have the authority to disseminate and enforce the Contractor's Equal Employment and Affirmative Action Program policies.

(f) Maintain records as are necessary to determine compliance with Equal Employment Practices and Affirmative Action Program obligations and make the records available to City, State and Federal authorities upon request.

(g) Establish written company policies, rules and procedures which shall be encompassed in a company-wide Affirmative Action Program for all its operations and Contracts. The policies shall be provided to all employees, Subcontractors, vendors, unions and all others with whom the Contractor may become involved in fulfilling any of its Contracts.

(h) Document its good faith efforts to correct any deficiencies when problems are experienced by the Contractor in complying with its obligations pursuant to this article. The Contractor shall state:

(i) What steps were taken, how and on what date.

(ii) To whom those efforts were directed.

(iii) The responses received, from whom and when.

(iv) What other steps were taken or will be taken to comply and when.

(v) Why the Contractor has been or will be unable to comply.

2. Every contract of $25,000 or more which may provide construction, demolition, renovation, conservation or major maintenance of any kind shall also comply with the requirements of Section 10.13 of the Los Angeles Administrative Code.

L. The Affirmative Action Program required to be submitted hereunder and the pre-registration, pre-bid, pre-proposal or pre-award conference which may be required by the Awarding Authority shall, without limitation as to the subject or nature of employment activity, be concerned with such employment practices as:

1. Apprenticeship where approved programs are functioning, and other on-the-job training for non-apprenticeable occupations;

2. Classroom preparation for the job when not apprenticeable;

3. Pre-apprenticeship education and preparation;

4. Upgrading training and opportunities;

5. Encouraging the use of Contractors, Subcontractors and suppliers of all racial and ethnic groups; provided, however, that any contract subject to this ordinance shall require the Contractor, Subcontractor or supplier to provide not less than the prevailing wage, working conditions and practices generally observed in private industries in the Contractor's, Subcontractor's or supplier's geographical area for such work;

6. The entry of qualified women, minority and all other journeymen into the industry; and

7. The provision of needed supplies or job conditions to permit persons with disabilities to be employed, and minimize the impact of any disability.

M. Any adjustments which may be made in the Contractor's work force to achieve the requirements of the City's Affirmative Action Program in purchasing and construction shall be accomplished by either an increase in the size of the work force or replacement of those employees who leave the work force by reason of resignation, retirement or death and not by termination, layoff, demotion or change in grade.

N. This ordinance shall not confer upon the City of Los Angeles or any Agency, Board or Commission thereof any power not otherwise provided by law to determine the legality of any existing collective bargaining agreement and shall have application only to discriminatory employment practices by Contractors engaged in the performance of City Contracts.

O. All Contractors subject to the provisions of this article shall include a similar provision in all subcontracts awarded for work to be performed under the Contract with the City and shall impose the same obligations including, but not limited to, filing and reporting obligations, on the Subcontractors as are applicable to the Contractor. Failure of the Contractor to comply with this requirement or to obtain the compliance of its Subcontractors with all such obligations shall subject the Contractor to the imposition of any and all sanctions allowed by law, including, but not limited to, termination of the Contractor's Contract with the City.

EXHIBIT B

SMALL/VERY SMALL BUSINESS ENTERPRISE PROGRAM

The Harbor Department is committed to creating an environment that provides all individuals and businesses open access to the business opportunities available at the Harbor Department in a manner that reflects the diversity of the City of Los Angeles. The Harbor Department's Small Business Enterprise (SBE) Program was created to provide additional opportunities for small businesses to participate in professional service and construction contracts. An overall Department goal of 25% SBE participation, including 5% Very Small Business Enterprise (VSBE) participation, has been established for the Program. The specific goal or requirement for each contract opportunity may be higher or lower based on the scope of work.

It is the policy of the Harbor Department to solicit participation in the performance of all service contracts by all individuals and businesses, including, but not limited to, SBEs, VSBEs, women-owned business enterprises (WBEs), minority-owned business enterprises (MBEs), and disabled veteran business enterprises (DVBEs). The SBE Program allows the Harbor Department to target small business participation, including MBEs, WBEs, and DVBEs, more effectively. It is the intent of the Harbor Department to make it easier for small businesses to participate in contracts by providing education and assistance on how to do business with the City, and ensuring that payments to small businesses are processed in a timely manner. **In order to ensure the highest participation of SBE/VSBE/MBE/WBE/DVBEs, all proposers shall utilize the City's contracts management and opportunities database, the Regional Alliance Marketplace for Procurement (RAMP), at http://www.RAMPLA.org, to outreach to potential subconsultants.**

The Harbor Department defines a SBE as an independently owned and operated business that is not dominant in its field and meets criteria set forth by the Small Business Administration in Title 13, Code of Federal Regulations, Part 121. Go to www.sba.gov for more information. The Harbor Department defines a VSBE based on the State of California's Micro-business definition which is (1) a small business that has average annual gross receipts of $5,000,000 or less within the previous three years, or (2) a small business manufacturer with 25 or fewer employees.

The SBE Program is a results-oriented program, requiring consultants who receive contracts from the Harbor Department to perform outreach and utilize certified small businesses. **Based on the work to be performed, it has been determined that the percentage of small business participation will be 25%, including 5% VSBE participation**. The North American Industry Classification System (NAICS) Code for the scope of services is **541330**. This NAICS Code is the industry code that corresponds to at least 51% of the scope of services and will be used to determine the size standard for SBE participation of the Prime Consultant. The maximum SBE size standard for this NAICS Code is $25.5 million.

Consultant shall be responsible for determining the SBE status of its subconsultants for purposes of meeting the small business requirement. Subconsultants must qualify as an SBE based on the type of services that they will be performing under the Agreement. All business participation will be determined by the percentage of the total amount of compensation under the agreement paid to SBEs. The Consultant shall not substitute an SBE firm without obtaining prior approval of the City. A request for substitution must be based upon demonstrated good cause. If substitution is permitted, Consultant shall endeavor to make an in-kind substitution for the substituted SBE.

Consultant shall complete, sign and submit as part of the executed agreement the attached Affidavit and Consultant Description Form. The Affidavit and Consultant Description Form, when signed, will signify the Consultant's intent to comply with the SBE requirement. All SBE/VSBE firms must be certified by the time proposals are due to receive credit. In addition all consultants and subconsultants must be registered on the RAMP by the time proposals are due.

AFFIDAVIT OF COMPANY STATUS

"The undersigned declares under penalty of perjury pursuant to the laws of the State of California that the following information and information contained on **the attached Consultant Description Form** is true and correct and includes all material information necessary to identify and explain the operations of

_____

Name of Firm

as well as the ownership and location thereof. Further, the undersigned agrees to provide complete and accurate information regarding ownership in the named firm, and all of its domestic and foreign affiliates, any proposed changes of the ownership and to permit the audit and examination of firm ownership documents, and the ownership documents of all of its domestic and foreign affiliates, in association with this agreement."

(1) **Small/Very Small Business Enterprise Program:** Please indicate the ownership of your company. Please check all that apply. At least one box must be checked:

☐SBE ☐VSBE ☐MBE ☐WBE ☐DVBE ☐OBE

- A Small Business Enterprise (SBE) is an independently owned and operated business that is not dominant in its field and meets criteria set forth by the Small Business Administration in Title 13, Code of Federal Regulations, Part 121.
- A Very Small Business Enterprise (VSBE) is 1) a small business that has average annual gross receipts of $5,000,000 or less within the previous three years, or (2) a small business manufacturer with 25 or fewer employees.
- A Minority Business Enterprise (MBE) is defined as a business in which a minority owns and controls at least 51% of the business. A Woman Business (WBE) is defined as a business in which a woman owns and controls at least 51% of the business. For the purpose of this project, a minority includes:
  (1) Black (all persons having origins in any of the Black African racial groups not of Hispanic origin);
  (2) Hispanic (all persons of Mexican, Puerto Rican, Cuban, Central or South American or other Spanish Culture or origin, regardless of race);
  (3) Asian and Pacific Islander (all persons having origins in any of the original peoples of the Far East, Southeast Asia, The Indian Subcontinent, or the Pacific Islands); and
  (4) American Indian or Alaskan Native (all persons having origins in any of the original peoples of North America and maintaining identifiable tribal affiliations through membership and participation or community identification).
- A Disabled Veteran Business Enterprise (DVBE) is defined as a business in which a disabled veteran owns at least 51% of the business, and the daily business operations are managed and controlled by one or more disabled veterans.
- An OBE (Other Business Enterprise) is any enterprise that is neither an SBE, VSBE, MBE, WBE, or DVBE.

(2) **Local Business Preference Program:** Please indicate the Local Business Enterprise status of your company. Only one box must be checked:

☐LBE ☐Non-LBE

- A Local Business Enterprise (LBE) is: (a) a business headquartered within Los Angeles, Orange, Riverside, San Bernardino, or Ventura Counties; or (b) a business that has at least 50 full-time employees, or 25 full-time employees for specialty marine contracting firms, working in Los Angeles, Orange, Riverside, San Bernardino, or Ventura Counties. "Headquartered" shall mean that the business physically conducts and manages all of its operations from a location in the above-named counties.
- A Non-LBE is any business that does not meet the definition of a LBE.

Signature:_____ Title: _____

Printed Name:_____ Date Signed:_____

Consultant Description Form

PRIME CONSULTANT:

Contract Title: _____

Business Name: _____ RAMP ID#: _____

Award Total: $ _____

Owner's Ethnicity: _____ Gender _____Group: SBE VSBE MBE WBE DVBE OBE (Circle all that apply)

Local Business Enterprise: YES_____ NO_____ (Check only one)

Primary NAICS Code: _____

Address: _____

City/State/Zip: _____

County: _____

Telephone: ( ) _____ FAX: ( ) _____

Contact Person/Title: _____

Email Address: _____

SUBCONSULTANT:

Business Name: _____ RAMP ID#: _____

Award Total: (% or $): _____

Services to be provided: _____

Owner's Ethnicity: _____ Gender _____ Group: SBE VSBE MBE WBE DVBE OBE (Circle all that apply)

Local Business Enterprise: YES_____ NO_____ (Check only one)

Primary NAICS Code: _____

Address: _____

City/State/Zip: _____

County: _____

Telephone: ( ) _____ FAX: ( ) _____

Contact Person/Title: _____

Email Address: _____

SUBCONSULTANT:

Business Name: _____ RAMP ID#: _____

Award Total: (% or $): _____

Services to be provided: _____

Owner's Ethnicity: _____ Gender _____ Group: SBE VSBE MBE WBE DVBE OBE (Circle all that apply)

Local Business Enterprise: YES_____ NO_____ (Check only one)

Primary NAICS Code: _____

Address: _____

City/State/Zip: _____

County: _____

Telephone: ( ) _____ FAX: ( ) _____

Contact Person/Title: _____

Email address: _____

Consultant Description Form

SUBCONSULTANT:

Business Name: _____ RAMP ID#: _____

Award Total: (% or $): _____

Services to be provided: _____

Owner's Ethnicity: _____ Gender _____ Group: SBE VSBE MBE WBE DVBE OBE (Circle all that apply)

Local Business Enterprise: YES_____ NO_____ (Check only one)

Primary NAICS Code: _____

Address: _____

City/State/Zip: _____

County: _____

Telephone: ( ) _____ FAX: ( ) _____

Contact Person/Title: _____

Email Address: _____

SUBCONSULTANT:

Business Name: _____ RAMP ID#: _____

Award Total: (% or $): _____

Services to be provided: _____

Owner's Ethnicity: _____ Gender _____ Group: SBE VSBE MBE WBE DVBE OBE (Circle all that apply)

Local Business Enterprise: YES_____ NO_____ (Check only one)

Primary NAICS Code: _____

Address: _____

City/State/Zip: _____

County: _____

Telephone: ( ) _____ FAX: ( ) _____

Contact Person/Title: _____

Email Address: _____

SUBCONSULTANT:

Business Name: _____ RAMP ID#: _____

Award Total: (% or $): _____

Services to be provided: _____

Owner's Ethnicity: _____ Gender _____ Group: SBE VSBE MBE WBE DVBE OBE (Circle all that apply)

Local Business Enterprise: YES_____ NO_____ (Check only one)

Primary NAICS Code: _____

Address: _____

City/State/Zip: _____

County: _____

Telephone: ( ) _____ FAX: ( ) _____

Contact Person/Title: _____

Email address: _____

EXHIBIT C

PROPRIETARY SMALL BUSINESS ENTERPRISE (SBE)

ROADMAP FOR APPLICANTS

Should I apply?

If your firm is currently certified with any of the following agencies, you do NOT need to submit the SBE (Proprietary) Application:

- Federal Small Business Administration (SBA) - 8(a) Business Development Program
- State of California Department of General Services (DGS) – Small Business (SB),Micro Business (MB) and Public Works (PW)
- California Department of Transportation (CALTRANS)- Small Minority/Women Business Enterprise (SMBE/SWBE)
- L.A. County Metropolitan Transportation Authority (METRO) – Small Business Enterprise (SBE)
- US Women's Chamber of Commerce (USWCC) - Women-Owned Small Business (WOSB) & Economically Disadvantaged Women-owned Business (EDWOSB)
- National Women Business Owners Corporation (NWBOC) - Women-Owned Small Business (WOSB) & Economically Disadvantaged Women-owned Business (EDWOSB)
- City of Los Angeles – Local Small Business (LSB)
- Los Angeles County – Local Small Business Enterprise (LSBE)
- California Unified Certification Program (CUCP) – Disadvantaged Business Enterprise (DBE)
  CUCP Agencies include:

- California Department of Transportation (CALTRANS)
- L.A. County Metropolitan Transportation Authority (METRO)
- San Francisco Bay Area Rapid Transit District (BART)
- San Francisco Municipal Transportation Agency (SFMTA)
- Santa Clara Valley Transportation Authority (VTA)
- City of Fresno
- City of Los Angeles
- San Diego County Regional Airport Authority (SAN)
- San Francisco International Airport (SFO)
- San Mateo County Transit District (SAMTRANS)

If you are certified by one of the agencies listed above you may add SBE (Proprietary) to your LA RAMP profile for verification or check the Bid/Proposal documents for the Department's instruction regarding verification of certification.

If your firm is not currently certified with one of the above agencies, answer these questions:

- Is your firm an independently-owned and operated business?
- Is your firm a small business that meets the size criteria set forth by the Small Business Administration 8(a) Business Development Program **or** the State of California DGS Small Business Program?
- Is your firm organized as a for-profit business?

If you answered "Yes" to all of the questions above, you may be eligible to be certified as an SBE (Proprietary)

Complete the attached application and include all of the required documents listed on the checklist of SUPPORTING DOCUMENTATION at the end of this form.

Send completed application to:

CITY OF LOS ANGELES
DEPARTMENT OF PUBLIC WORKS
Bureau of Contract Administration
Office of Contract Compliance – Centralized Certification Administration
1149 S. Broadway, Ste. 300
Los Angeles, CA 90015

For Assistance:

Email bca.certifications@lacity.org or Call (213) 847-2684

Where can I find more information?

- State of California SBE program - http://www.dgs.ca.gov/pd/Programs/OSDS/GetCertified.aspx
- Small Business Administration 8(a) Business Development, WOSB, and EDWOSB Programs: http://www.sba.gov
- SBA Size Standards www.sba.gov/sites/default/files/Size_Standards_Table.pdf
- NAICS Search https://www.census.gov/naics/?99967
- LAWA SBE Program Rules and Regulations – http://www.lawa.org/welcome_LAWA.aspx?id=6413
- Port of Los Angeles Small Business Enterprise (SBE) and VSBE Program information- https://www.portoflosangeles.org/business/sbp.asp
- DWP SBE Program Information – https://www.ladwp.com/ladwp/faces/ladwp/partners/p-vendorsandbidders/p-vb-sbedvbe?_adf.ctrl-state=bfw1rfro4_4&_afrLoop=78220979903629

EXHIBIT C

PROPRIETARY SMALL BUSINESS ENTERPRISE (SBE)

Please answer the following:

Which Department referred you to the Office of Contract Compliance for Proprietary SBE Certification? (You must check only one box)

- ☐ Department of Water and Power
- ☐ Harbor Department
- ☐ Los Angeles World Airports

Are you currently bidding or participating on a City Project?

☐ NO ☐ YES

If yes, please provide the following information:

Project Name: _____

RAMP ID Number: _____

Bid/RFP Number: _____

Due Date: _____

EXHIBIT C
PROPRIETARY SMALL BUSINESS ENTERPRISE (SBE)

I. GENERAL INFORMATION

HAS YOUR FIRM BEEN CERTIFIED BY ANOTHER CERTIFYING AGENCY? ☐ YES ☐ NO

IF YES, WHICH AGENCY & CERTIFICATION (e.g. SBE, MBE, WBE, DBE, etc.):	HAS FIRM EVER BEEN DENIED CERTIFICATION? ☐YES ☐NO IF YES, WHICH AGENCY & DATE:		
LEGAL BUSINESS NAME	FICTITIOUS OR DOING BUSINESS AS (DBA) NAME(S):		
STREET ADDRESS OF PRINCIPAL OFFICE LOCATION (DO NOT USE PO BOX)	CITY	STATE	ZIP
MAILING ADDRESS (IF DIFFERENT)	CITY	STATE	ZIP

FEDERAL EMPLOYER ID NUMBER (FEIN)	DATE FIRM ESTABLISHED:	WEBPAGE ADDRESS:
PRIMARY POINT OF CONTACT: (NAME & TITLE)	PHONE NUMBER:	FAX NUMBER:
	OTHER PHONE NUMBER:	EMAIL ADDRESS:

ADDRESSES OF OTHER LOCATIONS, FACILITIES, STORAGE SPACES, ETC. (ATTACH ADDITIONAL PAGES IF NECESSARY)

DESCRIPTION (e.g. STORAGE, FIELD OFFICE, FACTORY)	CITY	STATE	ZIP
DESCRIPTION (e.g. STORAGE, FIELD OFFICE, FACTORY)	CITY	STATE	ZIP

METHOD OF ACQUISITION: ☐ STARTED NEW BUSINESS ☐ PURCHASED EXISTING BUSINESS ☐ INHERITED BUSINESS

OTHER (EXPLAIN): _____

BUSINESS STRUCTURE: ☐ SOLE PROPRIETORSHIP ☐ PARTNERSHIP ☐ CORPORATION ☐ LLC ☐ JOINT VENTURE

TYPE OF BUSINESS: ☐ CONSTRUCTION ☐ MANUFACTURING ☐ SERVICE/CONSULTING ☐ WHOLESALER/RETAILER

☐ DISTRIBUTOR/BROKER ☐ CONCESSION ☐ TRUCKER ☐ OTHER _____

IF TYPE OF BUSINESS IS CONSTRUCTION, PROVIDE:

CONTRACTOR'S LICENSE NUMBER:	LICENSE CLASSIFICATION CODE(S) :

ENTER FIRM'S AVERAGE NUMBER OF EMPLOYEES FOR THE LAST FOUR QUARTERS INCLUDING ALL EMPLOYEES THAT ARE IN CALIFORNIA, OUT OF STATE, AND/OR OUT OF THE COUNTRY. (IF IN BUSINESS LESS THAN A YEAR, AVERAGE THE NUMBER OF EMPLOYEES OVER THE NUMBER OF QUARTERS THAT YOU HAVE BEEN IN BUSINESS)	NUMBER OF EMPLOYEES:

NUMBER OF: OWNERS _____ OFFICERS _____ DIRECTORS_____

HAS FIRM EVER EXISTED UNDER DIFFERENT OWNERSHIP? ☐ YES ☐ NO

IF YES, PROVIDE PREVIOUS OWNERSHIP, BUSINESS STRUCTURE, DATE THE CHANGE OCCURRED, AND BRIEF EXPLANATION OF CHANGE:

EXHIBIT C
PROPRIETARY SMALL BUSINESS ENTERPRISE (SBE)

II. OWNERSHIP (ATTACH ADDITIONAL PAGES IF NECESSARY)			
NAME OF INDIVIDUAL OWNER(S) SHAREHOLDER(S) AND/OR CORPORATE OFFICERS	TITLE	% OWNERSHIP	HOME ADDRESS (STREET, CITY, STATE, ZIP)

III. AFFILIATE BUSINESS RELATIONSHIP(S) - DO NOT LEAVE BLANK OR ENTER N/A		
DURING THE PREVIOUS THREE (3) TAX YEARS DID ANY OWNER/OFFICER:	YES	NO
1. HAVE OWNERSHIP INTEREST IN ANOTHER BUSINESS?	☐	☐
2. SHARE OR HAVE COMMON MANAGEMENT WITH ANOTHER BUSINESS?	☐	☐
3. SHARE OR HAVE COMMON OWNERS WITH ANOTHER BUSINESS?	☐	☐
4. HAVE A FAMILY MEMBER(S) ENGAGED IN A SIMILAR BUSINESS ACTIVITY?	☐	☐
5. HAVE A FINANCIAL RELATIONSHIP WITH ANOTHER BUSINESS CONSISTING OF A LOAN AND/OR ASSISTANCE BOND, SECURITY, OR CREDIT REQUIREMENTS?	☐	☐
6. HAVE A LONG-TERM OR PERMANENT CONTRACTUAL RELATIONSHIP WITH ANOTHER BUSINESS?	☐	☐
7. SHARE FACILITIES, EQUIPMENT, OR SYSTEMS WITH ANOTHER BUSINESS?	☐	☐
8. SHARE EMPLOYEES WITH ANOTHER BUSINESS?	☐	☐

IF YOU ANSWERED YES TO ANY OF THE ABOVE, PROVIDE THE FOLLOWING INFORMATION FOR EACH BUSINESS THAT APPLIES TO EACH "YES" RESPONSE (ATTACH ADDITIONAL PAGES IF NECESSARY)

1)OWNER/OFFICER NAME	2)OWNER/OFFICER NAME	3)OWNER/OFFICER NAME
BUSINESS NAME	BUSINESS NAME	BUSINESS NAME
BUSINESS ADDRESS	BUSINESS ADDRESS	BUSINESS ADDRESS
NATURE OF BUSINESS	NATURE OF BUSINESS	NATURE OF BUSINESS
NATURE OF RELATIONSHIP W/ APPLICANT FIRM	NATURE OF RELATIONSHIP W/ APPLICANT FIRM	NATURE OF RELATIONSHIP W/ APPLICANT FIRM

IV. BUSINESS CLASSIFICATION

PROVIDE A DESCRIPTION OF YOUR BUSINESS AND/OR INDIVIDUAL KEYWORDS WHICH BEST DESCRIBE YOUR BUSINESS SERVICES:
USE THE NORTH AMERICAN INDUSTRY CLASSIFICATION SYSTEM (NAICS) TO IDENTIFY THE FIRM'S AREA(S) OF SPECIALTY.
THE PRIMARY NAICS REPRESENTS THE FIRM'S LARGEST SOURCE OF REVENUE FOR THE MOST RECENTLY COMPLETED FISCAL YEAR. ENTER UP TO 5 CODES.
FOR A FULL LIST OF NAICS CODES AND ASSISTANCE IN LOCATING APPROPRIATE CODES PLEASE VISIT: HTTP://WWW.NAICS.COM/SEARCH.HTM

6 DIGIT NAICS CODE & DESCRIPTION:	% OF THE FIRM'S REVENUES EARNED IN THIS NAICS DURING PAST 12 MONTHS:
1)	
2)	
3)	
4)	
5)	

EXHIBIT C
PROPRIETARY SMALL BUSINESS ENTERPRISE (SBE)

PENALTY OF PERJURY DECLARATION

The undersigned states:

I certify under penalty of perjury under the laws of the City of Los Angeles and the State of California that all information submitted in the Small Business Enterprise application, and any additional information to determine eligibility is true and correct.

Authorized Signature | Title

Print Name | Date

SUPPORTING DOCUMENTATION CHECKLIST
SUBMIT REQUIRED DOCUMENTATION FOR ALL CATEGORIES BELOW THAT APPLY TO YOUR BUSINESS.

PLEASE DO NOT BIND YOUR SUBMITTAL

ALL APPLICANTS

- ☐ Most recently entire filed Federal Individual Income Tax Return (Form 1040) for **each owner** including all schedules and statements.
- ☐ Entire filed Federal Income Tax Return (Form 1040, 1220, 1120S or 1065) for the applicant business **and** each affiliate business for the most recent three (3) years or for the years the firm or its affiliate(s) were in business.
- ☐ If the firm's business classification identified by the selected NAICS codes requires a professional license or permit in order to operate, include a copy of the current license or permit (e.g. Architect, Engineer, Contractor, Broker/Agent, Lawyer, Security, etc.)
- ☐ If the size standard for the selected NAICS codes is number of employees- provide the Quarterly Contribution returns and report of wages (Form DE 9C) for the applicant business and each affiliate business for the four (4) most recent completed quarters. Submit a copy of out of state and/or out of country equivalent to form DE 9C, if applicable.

SOLE PROPRIETORSHIP

- ☐ Fictitious Business Name Statement

PARTNERSHIP

- ☐ Partnership Agreement and Amendments

CORPORATION

- ☐ Articles of Incorporation *(signed by the state official with approval date)*
- ☐ Corporate Meeting minutes for the past two (2) years listing current elected corporate officers and directors; or statement of information as filed with CA Secretary of State

LLC

- ☐ Articles of Organization, as filed with State
- ☐ LLC Statement of Information
- ☐ Operating Agreement and Amendments

JOINT VENTURE

- ☐ Joint Venture Agreement and Amendments

TRUCKING COMPANY

- ☐ Title(s) and registration certificate(s) for each truck owned and/or operated by your business
- ☐ Current Motor Carrier Permit

Exhibit D - Business Tax Registration Certificate (BTRC) Number

The City of Los Angeles, Office of Finance requires all firms that engage in any business activity within the City of Los Angeles to pay City business taxes. Each firm or individual (other than a municipal employee) is required to obtain the necessary Business Tax Registration Certification (BTRC) and pay business tax. (Los Angeles Municipal code Section 21.09 et seq.)

All firms and individuals that do business with the City of Los Angeles will be required to provide a BTRC number or an exemption number as proof of compliance with Los Angeles City business tax requirements in order to receive payment for goods or services. Beginning October 14, 1987, payments for goods or services will be withheld unless proof of tax compliance is provided to the City.

The Tax and Permit Division of Los Angeles Office of Finance, has the sole authority to determine whether a firm is covered by business tax requirements. Those firms not required to pay will be given an exemption number.

If you do NOT have a BTRC number contact the Tax and Permit Division at the office listed below, or log on to http://finance.lacity.org/, to download the business tax registration application.

MAIN OFFICE

LA City Hall	201 N. Main Street, Rm. 101	(844) 663-4411

Exhibit E- Equal Benefits Ordinance

Sec. 10.8.2.1. Equal Benefits Ordinance.

Discrimination in the provision of employee benefits between employees with domestic partners and employees with spouses results in unequal pay for equal work. Los Angeles law prohibits entities doing business with the City from discriminating in employment practices based on marital status and/or sexual orientation. The City's departments and contracting agents are required to place in all City contracts a provision that the company choosing to do business with the City agrees to comply with the City's nondiscrimination laws.

It is the City's intent, through the contracting practices outlined in this Ordinance, to assure that those companies wanting to do business with the City will equalize the total compensation between similarly situated employees with spouses and with domestic partners. The provisions of this Ordinance are designed to ensure that the City's contractors will maintain a competitive advantage in recruiting and retaining capable employees, thereby improving the quality of the goods and services the City and its people receive, and ensuring protection of the City's property.

(c) Equal Benefits Requirements.

(1) No Awarding Authority of the City shall execute or amend any Contract with any Contractor that discriminates in the provision of Benefits between employees with spouses and employees with Domestic Partners, between spouses of employees and Domestic Partners of employees, and between dependents and family members of spouses and dependents and family members of Domestic Partners.

(2) A Contractor must permit access to, and upon request, must provide certified copies of all of its records pertaining to its Benefits policies and its employment policies and practices to the DAA, for the purpose of investigation or to ascertain compliance with the Equal Benefits Ordinance.

(3) A Contractor must post a copy of the following statement in conspicuous places at its place of business available to employees and applicants for employment: "During the performance of a Contract with the City of Los Angeles, the Contractor will provide equal benefits to its employees with spouses and its employees with domestic partners." The posted statement must also include a City contact telephone number which will be provided each Contractor when the Contract is executed.

(4) A Contractor must not set up or use its contracting entity for the purpose of evading the requirements imposed by the Equal Benefits Ordinance.

(d) Other Options for Compliance. Provided that the Contractor does not discriminate in the provision of Benefits, a Contractor may also comply with the Equal Benefits Ordinance in the following ways:

(1) A Contractor may provide an employee with the Cash Equivalent only if the DAA determines that either:

a. The Contractor has made a reasonable, yet unsuccessful effort to provide Equal Benefits; or

b. Under the circumstances, it would be unreasonable to require the Contractor to provide Benefits to the Domestic Partner (or spouse, if applicable).

(2) Allow each employee to designate a legally domiciled member of the employee's household as being eligible for spousal equivalent Benefits.

(3) Provide Benefits neither to employees' spouses nor to employees' Domestic Partners.

(e) Applicability.

(1)Unless otherwise exempt, a Contractor is subject to and shall comply with all applicable provisions of the Equal Benefits Ordinance.

(2) The requirements of the Equal Benefits Ordinance shall apply to a Contractor's operations as follows:

a. A Contractor's operations located within the City limits, regardless of whether there are employees at those locations performing work on the Contract.

b. A Contractor's operations on real property located outside of the City limits if the property is owned by the City or the City has a right to occupy the property, and if the Contractor's presence at or on that property is connected to a Contract with the City.

c. The Contractor's employees located elsewhere in the United States but outside of the City limits if those employees are performing work on the City Contract.

(3) The requirements of the Equal Benefits Ordinance do not apply to collective bargaining agreements ("CBA") in effect prior to January 1, 2000. The Contractor must agree to propose to its union that the requirements of the Equal Benefits Ordinance be incorporated into its CBA upon amendment, extension, or other modification of a CBA occurring after January 1, 2000.

(f) Mandatory Contract Provisions Pertaining to Equal Benefits. Unless otherwise exempted, every Contract shall contain language that obligates the Contractor to comply with the applicable provisions of the Equal Benefits Ordinance. The language shall include provisions for the following:

(1) During the performance of the Contract, the Contractor certifies and represents that the Contractor will comply with the Equal Benefits Ordinance.

(2) The failure of the Contractor to comply with the Equal Benefits Ordinance will be deemed to be a material breach of the Contract by the Awarding Authority.

(3) If the Contractor fails to comply with the Equal Benefits Ordinance the Awarding Authority may cancel, terminate or suspend the Contract, in whole or in part, and all monies due or to become due under the Contract may be retained by the City. The City may also pursue any and all other remedies at law or in equity for any breach.

(4) Failure to comply with the Equal Benefits Ordinance may be used as evidence against the Contractor in actions taken pursuant to the provisions of Los Angeles Administrative Code Section 10.40, et seq., Contractor Responsibility Ordinance.

(5) If the DAA determines that a Contractor has set up or used its Contracting entity for the purpose of evading the intent of the Equal Benefits Ordinance, the Awarding Authority may terminate the Contract on behalf of the City. Violation of this provision may be used as evidence against the Contractor in actions taken pursuant to the provisions of Los Angeles Administrative Code Section 10.40, et seq., Contractor Responsibility Ordinance.

EXHIBIT F

RFP SELECTION EVALUATION FORM

PROJECT A: Maritime Support Facility/Terminal Island Rail System Grade Separation (TIGS)

Firm Name: _____ **Date:** _____

Evaluated by: _____

	Criteria to be Rated	Score (0-5)	Weight Factor	Weighted Score	Comments
Firm Qualifications, Experience and Reference					
1	Understanding of the Project		5		
2	Understanding of the Technical Issues		5		
3	Bridge Construction Management and Caltrans Experience		4		
4	Bridge Construction Inspection and Quality Assurance Experience		4		
5	Familiarity with City of LA and Caltrans Construction Codes and Regulations		2		
6	Understanding of Local Community and Tenant Concerns		2		
7	Utility Relocation/Coordination Experience		4		
Project Organization, Personnel and Staffing					
8	Project Manager/Senior Construction Manager		5		
9	Technical Teams		5		
10	Sub-Consultants		5		
Project Approach, Work Plan, Management and Timeline					
11	Overall Management Plan		5		
12	Quality Assurance		4		
13	Cost Control		4		
14	Schedule Control		4		
15	Identification of key issues that may impact work		3		
Rates, Fees and Budget Control					
16	Value of Services/Cost Effectiveness (Rates)		5		
Clarity and Comprehensiveness of Proposal					
17	Appearance and organization of proposal		2		

TOTAL

SCORING GUIDELINES:

0 - Not Included/Non-Responsive
1 - Marginal Abilities, Serious Deficiencies
2 - Adequate with Minor Deficiencies
3 - Adequate-Standard-Acceptable
4 - Well Qualified
5 - Exceptionally Well Qualified

EXHIBIT F

RFP SELECTION EVALUATION FORM

PROJECT B : Terminal Island Maritime Support Facility **(TIMSF)**

Firm Name: _____ **Date:** _____

Evaluated by: _____

	Criteria to be Rated	Score (0-5)	Weight Factor	Weighted Score	Comments
Firm Qualifications, Experience and Reference					
1	Understanding of the Project		5		
2	Understanding of the Technical Issues		5		
3	Heavy Civil and Building Construction Experience		5		
4	Familiarity with City of LA Construction Codes and Regulations		2		
5	Understanding of Local Community and Tenant Concerns		2		
6	Utility Relocation/Coordination Experience		4		
Project Organization, Personnel and Staffing					
7	Project Manager/Senior Construction Manager		5		
8	Technical Teams		5		
9	Sub-Consultants		5		
Project Approach, Work Plan, Management and Timeline					
10	Overall Management Plan		5		
11	Quality Assurance		4		
12	Cost Control		4		
13	Schedule Control		4		
14	Identification of key issues that may impact work		3		
Rates, Fees and Budget Control					
15	Value of Services/Cost Effectiveness (Rates)		5		
Clarity andComprehensiveness of Proposal					
16	Appearance and organization of proposal		2		

TOTAL

SCORING GUIDELINES:

0 - Not Included/Non-Responsive
1 - Marginal Abilities, Serious Deficiencies
2 - Adequate with Minor Deficiencies
3 - Adequate-Standard-Acceptable
4 - Well Qualified
5 - Exceptionally Well Qualified

EXHIBIT G

FORM 50

Bidder Certification

Los Angeles City ETHICS COMMISSION

This form must be submitted with your bid or proposal to the City department that is awarding the contract noted below. If you have questions about this form, please contact the Ethics Commission at (213) 978-1960.

☐ Original Filing ☐ Amendment: Date of Signed Original_____. Date of Last Amendment_____.

Reference Number (Bid, Contract, or BAVN)	Awarding Authority (Department awarding the contract)
Bidder Name	
Address	
Email Address	Phone Number

Certification

I certify the following on my own behalf or on behalf of the entity named above, which I am authorized to represent:

A. I am applying for one of the following types of contracts with the City of Los Angeles:

1. A goods or services contract with a value of more than $25,000 and a term of at least three months;
2. A construction contract with any value and duration;
3. A financial assistance contract, as defined in Los Angeles Administrative Code § 10.40.1(h), with a value of at least $100,000 and a term of any duration; or
4. A public lease or license, as defined in Los Angeles Administrative Code § 10.40.1(i), with any value and duration.

B. I acknowledge and agree to comply with the disclosure requirements and prohibitions established in the Los Angeles Municipal Lobbying Ordinance if I qualify as a lobbying entity under Los Angeles Municipal Code § 48.02.

I certify under penalty of perjury under the laws of the City of Los Angeles and the state of California that the information in this form is true and complete.

Name _____ Signature _____

Title _____ Date _____

Los Angeles Administrative Code § 10.40.1

(h) '"**City Financial Assistance Recipient**" means any person who receives from the City discrete financial assistance in the amount of One Hundred Thousand Dollars ($100,000.00) or more for economic development or job growth expressly articulated and identified by the City, as contrasted with generalized financial assistance such as through tax legislation.

Categories of such assistance shall include, but are not limited to, bond financing, planning assistance, tax increment financing exclusively by the City, and tax credits, and shall not include assistance provided by the Community Development Bank. City staff assistance shall not be regarded as financial assistance for purposes of this article. A loan shall not be regarded as financial assistance. The forgiveness of a loan shall be regarded as financial assistance. A loan shall be regarded as financial assistance to the extent of any differential between the amount of the loan and the present value of the payments thereunder, discounted over the life of the loan by the applicable federal rate as used in 26 U.S.C. Sections 1274(d), 7872(f). A recipient shall not be deemed to include lessees and sublessees.

Los Angeles Administrative Code § 10.37.1

(l) **"Public lease or license".**

(a) Except as provided in (l)(b), "Public lease or license" means a lease or license of City property on which services are rendered by employees of the public lessee or licensee or sublessee or sublicensee, or of a contractor or subcontractor, but only where any of the following applies:
  (1) The services are rendered on premises at least a portion of which is visited by substantial numbers of the public on a frequent basis (including, but not limited to, airport passenger terminals, parking lots, golf courses, recreational facilities); or
  (2) Any of the services could feasibly be performed by City employees if the awarding authority had the requisite financial and staffing resources; or
  (3) The DAA has determined in writing that coverage would further the proprietary interests of the City.

(b) A public lessee or licensee will be exempt from the requirements of this article subject to the following limitations:
  (1) The lessee or licensee has annual gross revenues of less than the annual gross revenue threshold, three hundred fifty thousand dollars ($350,000), from business conducted on City property;
  (2) The lessee or licensee employs no more than seven (7) people total in the company on and off City property;
  (3) To qualify for this exemption, the lessee or licensee must provide proof of its gross revenues and number of people it employs in the company's entire workforce to the awarding authority as required by regulation;
  (4) Whether annual gross revenues are less than three hundred fifty thousand dollars ($350,000) shall be determined based on the gross revenues for the last tax year prior to application or such other period as may be established by regulation;
  (5) The annual gross revenue threshold shall be adjusted annually at the same rate and at the same time as the living wage is adjusted under section 10.37.2 (a);
  (6) A lessee or licensee shall be deemed to employ no more than seven (7) people if the company's entire workforce worked an average of no more than one thousand two-hundred fourteen (1,214) hours per month for at least three-fourths (3/4) of the time period that the revenue limitation is measured;
  (7) Public leases and licenses shall be deemed to include public subleases and sublicenses;
  (8) If a public lease or license has a term of more than two (2) years, the exemption granted pursuant to this section shall expire after two (2) years but shall be renewable in two-year increments upon meeting the requirements therefor at the time of the renewal application or such period established by regulation.

FORM 55

Prohibited Contributors
(Bidders)

Los Angeles City ETHICS COMMISSION

This form must be completed in its entirety and submitted with your bid or proposal to the City department that is awarding the contract. Failure to submit a completed form may affect your bid or proposal. If you have questions about this form, please contact the Ethics Commission at (213) 978-1960.

☐ **Original Filing** ☐ **Amendment:** Date of Signed Original _____ Date of Last Amendment _____

Reference Number (Bid, Contract, or BAVN): _____ Date Bid Submitted: _____

Contract Description (Title of the RFP or City contract solicitation and description of the services to be provided):

_____

Awarding Authority (Department awarding the contract): _____

Bidder Name: _____

Bidder Address: _____

Bidder Email Address: _____ Bidder Phone Number: _____

Schedule Summary

Please complete all three of the following:

1. **SCHEDULE A — Bidder's Principals** *(check one)*
   The bidder has one or more **PRINCIPALS,** as defined in LAMC § 49.7.35(A)(6).
   At least one principal is required for entities. *(If you check "Yes", Schedule A is required.)*
   Yes ☐ No ☐

2. **SCHEDULE B — Subcontractors and Their Principals** *(check one)*
   The bidder has one or more **SUBCONTRACTORS** on this bid or proposal with subcontracts worth $100,000 or more. *(If you check "Yes", Schedule B is required.)*
   Yes ☐ No ☐

3. **TOTAL NUMBER OF PAGES SUBMITTED** (including this cover page): _____

Certification

I certify the following under penalty of perjury under the laws of the City of Los Angeles and the state of California: A) I understand, will comply with, and have notified my principals and subcontractors of the requirements and restrictions in Los Angeles City Charter § 470(c)(12) and any related ordinances; B) I understand that I must amend this form within ten business days if any information changes; C) I am the bidder named above or I am authorized to represent the bidder named above, and my name appears below; and D) The information provided in this form is true and complete to the best of my knowledge and belief.

_____ _____

Name Signature

_____ _____

Title Date

FORM 55

Prohibited Contributors
(Bidders)

Los Angeles City ETHICS COMMISSION

Schedule A - Bidder's Principals

Please identify the names and titles of all the bidder's principals (attach additional sheets if necessary). Principals include a bidder's board chair, president, chief executive officer, chief operating officer, and individuals who serve in the functional equivalent of one or more of those positions. Principals also include individuals who hold an ownership interest in the bidder of at least 20 percent and employees of the bidder who are authorized by the bid or proposal to represent the bidder before the City.

Name: _____ Title: _____

Address: _____

Name: _____ Title: _____

Address: _____

Name: _____ Title: _____

Address: _____

Name: _____ Title: _____

Address: _____

Name: _____ Title: _____

Address: _____

Name: _____ Title: _____

Address: _____

Name: _____ Title: _____

Address: _____

Name: _____ Title: _____

Address: _____

Name: _____ Title: _____

Address: _____

☐ Check this box if additional Schedule A pages are attached.

FORM 55

Prohibited Contributors
(Bidders)

Los Angeles City ETHICS COMMISSION

Schedule B - Subcontractors and Their Principals

Please identify all subcontractors whose subcontracts are worth $100,000 or more. Separate Schedule B pages are required for each subcontractor who meets the threshold.

Subcontractor's Name
Subcontractor's Address

Please check one of the following options:

This subcontractor has one or more principals. ☐ **Yes*** ☐ **No**

* *Each principal's name and title must be identified below. Attach additional sheets if necessary. Principals include a subcontractor's board chair, president, chief executive officer, chief operating officer, and individuals who serve in the functional equivalent of one or more of those positions. Principals also include individuals who hold an ownership interest in the subcontractor of at least 20 percent and employees of the subcontractor who are authorized by the bid or proposal to represent the subcontractor before the City.*

Name: _____ Title: _____

Address: _____

Name: _____ Title: _____

Address: _____

Name: _____ Title: _____

Address: _____

Name: _____ Title: _____

Address: _____

Name: _____ Title: _____

Address: _____

Name: _____ Title: _____

Address: _____

☐ **Check this box if additional Schedule B pages are attached.**

EXHIBIT H

IRAN CONTRACTING ACT OF 2010 COMPLIANCE AFFIDAVIT

(California Public Contract Code Sections 2200-2208)

The California Legislature adopted the Iran Contracting Act of 2010 to respond to policies of Iran in a uniform fashion (PCC § 2201(q)). The Iran Contracting Act prohibits bidders engaged in investment activities in Iran from bidding on, submitting proposals for, or entering into or renewing contracts with public entities for goods and services of one million dollars ($1,000,000) or more (PCC § 2203(a)). A bidder who "engages in investment activities in Iran" is defined as either:

1. A bidder providing goods or services of twenty million dollars ($20,000,000) or more in the energy sector of Iran, including provision of oil or liquefied natural gas tankers, or products used to construct or maintain pipelines used to transport oil or liquefied natural gas, for the energy sector of Iran; **or**
2. A bidder that is a financial institution (as that term is defined in 50 U.S.C. § 1701) that extends twenty million dollars ($20,000,000) or more in credit to another person, for 45 days or more, if that person will use the credit to provide goods or services in the energy sector in Iran and is identified on a list created by the California Department of General Services (DGS) pursuant to PCC § 2203(b) as a person engaging in the investment activities in Iran.

The bidder shall certify that at the time of submitting a bid for new contract or renewal of an existing contract, the bidder is **not** identified on the DGS list of ineligible businesses or persons and that the bidder is **not** engaged in investment activities in Iran in violation of the Iran Contracting Act of 2010.

California law establishes penalties for providing false certifications, including civil penalties equal to the greater of $250,000 or twice the amount of the contract for which the false certification was made; contract termination; and three-year ineligibility to bid on contracts (PCC § 2205).

To comply with the Iran Contracting Act of 2010, the bidder shall provide its vendor or financial institution name, and City Business Tax Registration Certificate (BRTC) if available, in completing **ONE** of the options shown below.

OPTION #1: CERTIFICATION

I, the official named below, certify that I am duly authorized to execute this certification on behalf of the bidder or financial institution identified below, and that the bidder or financial institution identified below is **not** on the current DGS list of persons engaged in investment activities in Iran and is **not** a financial institution extending twenty million dollars ($20,000,000) or more in credit to another person or vendor, for 45 days or more, if that other person or vendor will use the credit to provide goods or services in the energy sector in Iran and is identified on the current DSG list of persons engaged in investment activities in Iran.

Vendor Name/Financial Institution (printed)		*BTRC (or n/a)*
By (Authorized Signature)		
Print Name and Title of Person Signing		
Date Executed	*City Approval (Signature)*	*(Print Name)*

OPTION #2: EXEMPTION

Pursuant to PCC § 2203(c) and (d), a public entity may permit a bidder or financial institution engaged in investment activities in Iran, on a case-by-case basis, to be eligible for, or to bid on, submit a proposal for, or enter into, or renew, a contract for goods and services. If the bidder or financial institution identified below has obtained an exemption from the certification requirement under the Iran Contracting Act of 2010, the bidder or financial institution shall complete and sign below and attach documentation demonstrating the exemption approval.

Vendor Name/Financial Institution (printed)		*BTRC (or n/a)*
By (Authorized Signature)		
Print Name and Title of Person Signing		
Date Executed	*City Approval (Signature)*	*(Print Name)*

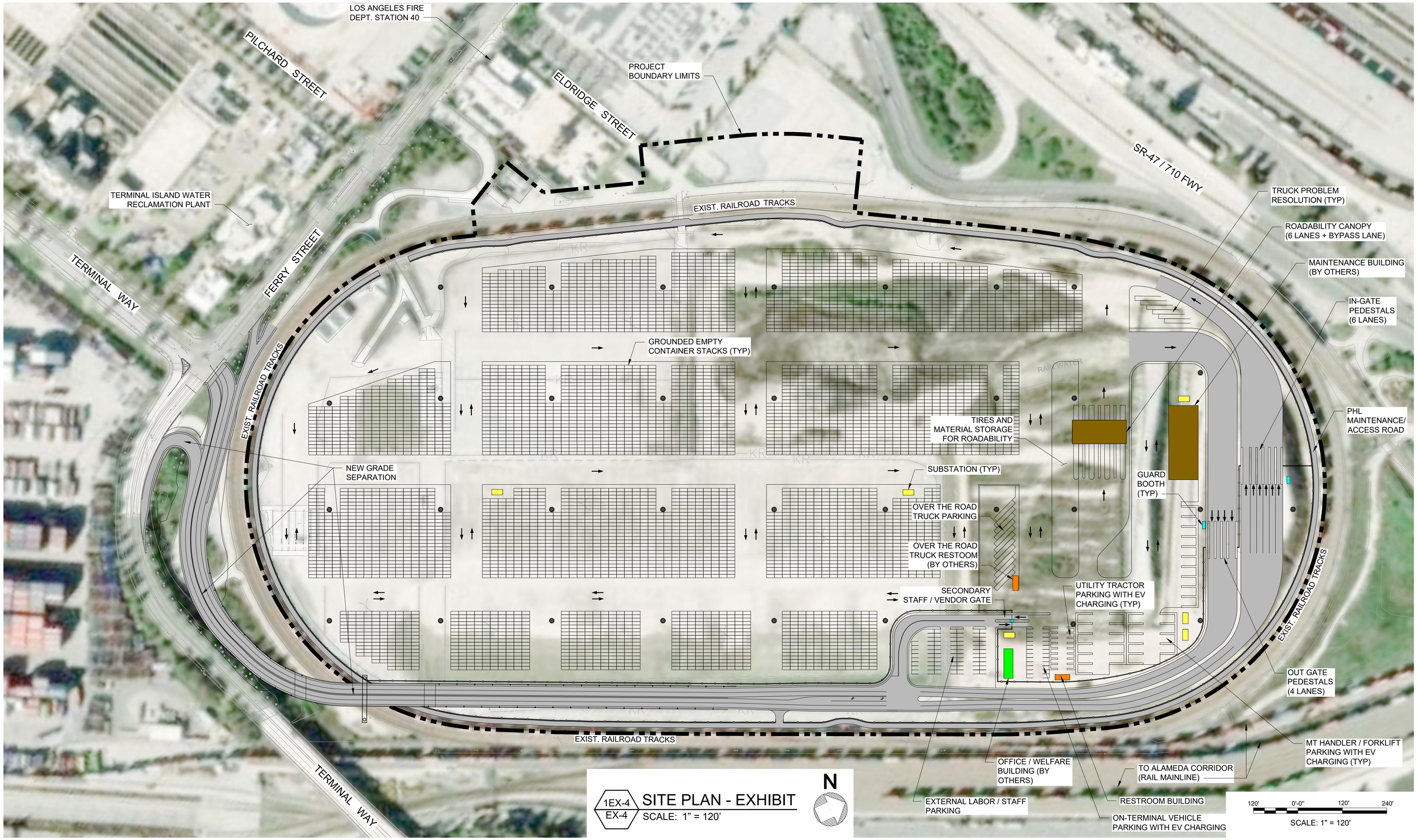

1EX-4 / EX-4 SITE PLAN - EXHIBIT
SCALE: 1" = 120'

NO.	DATE	DRAWN	REVISIONS -	CHK'D	APP'D	NO.	DATE	DRAWN	REVISIONS -	CHK'D	APP'D
			NOT FOR CONSTRUCTION						CONCEPT DESIGN		

Jacobs
2600 MICHELSON DRIVE, SUITE 500
IRVINE, CA 92612
T: (949) 224-7500
F: (949) 224-7501

SCALE: 1"=120'
DRAWN: EF
CHECKED: XX
DESIGNED: SM
ENGINEER / ARCHITECT

CHIEF OF DESIGN
ASSISTANT CHIEF HARBOR ENGINEER
CHIEF HARBOR ENGINEER DATE

TERMINAL ISLAND MARITIME SUPPORT FACILITY

SITE PLAN - EXHIBIT

THE PORT OF LOS ANGELES
ENGINEERING DIVISION
425 S. PALOS VERDES STREET SAN PEDRO CA 90731-3309

DRAWING NUMBER 1-3513
SHEET NUMBER EX-4

POLAPRO1_04/2023_BWD

DWG: C:\Users\McAmisMS\DC\ACCDocs\Jacobs\US CA_D3371901_POLA TIMSF\Project Files\30 PROJECT DATA\PID\CIVIL\Exhibits\1-3513 EX-4.dwg USER: McamisMS
DATE: Mar 04, 2025 9:57am XREFS:Base00 1-3513-C01 - Exhibit 4 2-3513 C02 sub_water_master sub_electrical_master sub_gas_master sub_oil_master sub_sewer_master sub_storm_master sub_tele_master 1-3513 C00D 1-3497 C-01 - East TD 1-3497 C-01 - East TD - Left turn pocket IMAGES:Pola TIMSF_00

ATTACHMENT 2

PROJECT A (TIGS) - PROJECT COST

For those items of the work for which compensation is payable in Fixed Fee amounts, Payment to the Consultant shall be made in monthly installments for the Fixed Fee amount set forth below, according to the percentage of completion of each phase of work, as determined and approved by the Chief Harbor Engineer based upon monthly progress reports submitted by Consultant. Monthly progress payments shall be equal to the percentage of completion for each phase multiplied by the Fixed Fee payable for completion of each phase, less amounts previously billed.

For those items of the work for which compensation is payable up to Estimated amounts, Consultant shall be paid an hourly fee at the rates set forth in this Proposal. Consultant's monthly invoice shall itemize all hours actually worked in performing such services, identifying the personnel and sub-consultant classifications of individuals performing such work and the applicable hourly rates.

Compensable amounts set forth on an hourly basis, or fixed fee basis, are estimated only. In the event that all necessary services required in any category described herein, in the judgement of the Chief Harbor Engineer, are fully performed by Consultant at a cost to City which is less than the amounts estimated and authorized hereunder, the Chief Harbor Engineer may apply the unexpended balance to compensate Consultant for services in any other category for which compensation was underestimated on either of these bases.

I. PRE-CONSTRUCTION SERVICES

1. Pre-Construction Services, as described in Tasks 1.1 through 1.5 of the Project Scope of Services (sub-Task scope and fee as noted in individual Directives),
Estimated Amount $_____.

II. CONSTRUCTION SERVICES

1. Construction Services, as described in Tasks 2.1, 2.3 through 2.17, 2.24, and 2.25 of the Project Scope of Services.
Fixed Fee $_____.

2. Construction Services, as described in Tasks 2.2, and 2.18, through 2.23 of the Project Scope of Services (sub-Task scope and fee as noted in individual Directives),
Estimated Amount $_____.

3. POST-CONSTRUCTION SERVICES

1. Post-Construction Services, as described in Tasks 3.1 and 3.2 of the Project Scope of Services (Sub-Task scope and fee as noted in individual Directives),
Estimated Amount $_____.

Subtotal for above Services $ _____.

III. OTHER SERVICES

1. Partnering facilitation and follow-up sessions as described in Task 4.1 of the Project Scope of Work (Sub-Task scope and fee as noted in individual Directives),

Estimated Amount $150,000.00

2. Quality Assurance Services as described in Task 4.2 of the Project Scope of Work (Sub-Task scope and fee as noted in individual Directives),

Estimated Amount $300,000.00

3. Additional As-Needed Services as described in Task 4.3 of the Project Scope of Work (Sub-Task scope and fee as noted in individual Directives),

Estimated Amount $300,000.00

Subtotal for Other Services $ _____.

Expenses for the Fixed Fee items are included in the Fixed Fee amounts.

Expenses for the estimated items in I. Pre-Construction Services, II. Construction Services, and III. Post-Construction Services are included in those Estimated Amounts.

Expenses for the items described in IV. Other Services shall be billed as noted in individual Directives.

Maximum Agreement compensation shall not exceed the total of I. through IV.

$ _____.

ATTACHMENT 2

PROJECT B (TIMSF) – PROJECT COST

For those items of the work for which compensation is payable in Fixed Fee amounts, Payment to the Consultant shall be made in monthly installments for the Fixed Fee amount set forth below, according to the percentage of completion of each phase of work, as determined and approved by the Chief Harbor Engineer based upon monthly progress reports submitted by Consultant. Monthly progress payments shall be equal to the percentage of completion for each phase multiplied by the Fixed Fee payable for completion of each phase, less amounts previously billed.

For those items of the work for which compensation is payable up to Estimated amounts, Consultant shall be paid an hourly fee at the rates set forth in this Proposal. Consultant's monthly invoice shall itemize all hours actually worked in performing such services, identifying the personnel and sub-consultant classifications of individuals performing such work and the applicable hourly rates.

Compensable amounts set forth on an hourly basis, or fixed fee basis, are estimated only. In the event that all necessary services required in any category described herein, in the judgement of the Chief Harbor Engineer, are fully performed by Consultant at a cost to City which is less than the amounts estimated and authorized hereunder, the Chief Harbor Engineer may apply the unexpended balance to compensate Consultant for services in any other category for which compensation was underestimated on either of these bases.

I. PRE-CONSTRUCTION SERVICES

1. Pre-Construction Services, as described in Tasks 1.1 through 1.5 of the Project Scope of Services (sub-Task scope and fee as noted in individual Directives),
Estimated Amount $_____.

II. CONSTRUCTION SERVICES

1. Construction Services, as described in Tasks 2.1, 2.3 through 2.17, 2.24, and 2.25 of the Project Scope of Services.
Fixed Fee $_____.

2. Construction Services, as described in Tasks 2.2, and 2.18, through 2.22 of the Project Scope of Services (sub-Task scope and fee as noted in individual Directives),
Estimated Amount $_____.

III. POST-CONSTRUCTION SERVICES

1. Post-Construction Services, as described in Tasks 3.1 and 3.2 of the Project Scope of Services (Sub-Task scope and fee as noted in individual Directives),
Estimated Amount $_____.

Subtotal for above Services $ _____.

IV. OTHER SERVICES

1. Partnering facilitation and follow-up sessions as described in Task 4.1 of the Project Scope of Work (Sub-Task scope and fee as noted in individual Directives),

Estimated Amount $150,000.00

2. Additional As-Needed Services as described in Task 4.3 of the Project Scope of Work (Sub-Task scope and fee as noted in individual Directives),

Estimated Amount $500,000.00

Subtotal for Other Services $ _____.

Expenses for the Fixed Fee items are included in the Fixed Fee amounts.

Expenses for the estimated items in I. Pre-Construction Services, II. Construction Services, and III. Post-Construction Services are included in those Estimated Amounts.

Expenses for the items described in IV. Other Services shall be billed as noted in individual Directives.

Maximum Agreement compensation shall not exceed the total of I. through IV.

$ _____.

Attachment 3 - Resource Schedule TIGS
Project A - Terminal Island Support Facility Access/Terminal Island Grade Separation

Task		Description/Position	Hourly Rate	Pre-Construction 4-Month Period		Construction 20-Month Period		Post-Construction 6-Month Period	
				Hours	Total Cost	Hours	Total Cost	Hours	Total Cost
1. PRE-CONSTRUCTION SERVICES	Pre-Construction Services as described in Tasks 1.1 through 1.5 of the Project Scope of Work	Senior Construction Manager (half time)		320	$0.00				
		Field/Office Engineer (half time)		320	$0.00				
		Document Control/Clerical (half time)			$0.00				
		Estimated Amount for this task			$0.00				
2. CONSTRUCTION SERVICES	Construction Services as described in Tasks 2.1, 2.3 through 2.17, 2.24 and 2.25 of the Project Scope of Services	Senior Construction Manager (full time)				3,200	$0.00		
		Field/Office Engineer (full time)				3,200	$0.00		
		Document Control/Clerical (full time)				3,200	$0.00		
		Fixed fee amount for this task					$0.00		
		Monthly Fixed Fee					$0.00		
	Construction Services as described in Tasks 2.2 and 2.18 through 2.23 of the Project Scope of Services	*2.2 Contractor's Construction Schedule (Assume 1600 hours)*				1,600	$0.00		
		2.18 Environmental Compliance and SWPPP Coordination (Assume 800 hours)				800	$0.00		
		2.19 Claims Management (Assume 500 hours)				500	$0.00		
		2.20 Specialized Scheduling Services (Assume 500 hours)				500	$0.00		
		2.21 Independent Estimating Services (Assume 1700 hours)				1,700	$0.00		
		2.22 Safety Programs (Assume 800 hours)				800	$0.00		
		2.23 Structure Representative (Assume 1700 hours)				1,700	$0.00		
							$0.00		
		Estimated Amount for this task					$0.00		
3. POST-CONSTRUCTION SERVICES	Post-Construction Services as described in Tasks 3.1 and 3.2 of the Project Scope of Work	Senior Construction Manager (full time)						960	$0.00
		Field Office Engineer (full time)						960	$0.00
		Document Control/Clerical (full time)						960	$0.00
		Estimated Amount for this task							$0.00
4. OTHER SERVICES	4.1 Partnering Facilitation Services as described in the Project Scope of Work						Estimated Amount		$150,000.00
	4.2 Quality Assurance Services as described in the Project Scope of Work						Estimated Amount		$300,000.00
	4.3 Additional As-Needed Services as described in the Project Scope of Work						Estimated Amount		$300,000.00

Maximum Agreement Compensation **$750,000.00**

Notes:

Proposer to enter information only in shaded cells.

Enter additional resources as necessary.

Attachment 3 - Resource Schedule
Project B - Terminal Island Maritime Support Facility

Task		Description/Position	Hourly Rate	Pre-Construction 4-Month Period		Construction 24-Month Period		Post-Construction 6-Month Period	
				Hours	Total Cost	Hours	Total Cost	Hours	Total Cost
1. PRE-CONSTRUCTION SERVICES	Pre-Construction Services as described in Tasks 1.1 through 1.5 of the Project Scope of Work	Senior Construction Manager (half time)		320	$0.00				
		Field/Office Engineer (half time)		320	$0.00				
		Document Control/Clerical (half time)		320	$0.00				
		Estimated Amount for this task			$0.00				
2. CONSTRUCTION SERVICES	Construction Services as described in Tasks 2.1, 2.3 through 2.17, 2.24 and 2.25 of the Project Scope of Services	Senior Construction Manager (full time)				3,900	$0.00		
		Field/Office Engineer (full time)				3,900	$0.00		
		Document Control/Clerical (full time)				3,900	$0.00		
		Fixed fee amount for this task					$0.00		
		Monthly Fixed Fee					$0.00		
	Construction Services as described in Tasks 2.2 and 2.18 through 2.22 of the Project Scope of Services	*2.2 Contractor's Construction Schedule (Assume 2000 hours)*				2,000	$0.00		
		2.18 Environmental Compliance and SWPPP Coordination (Assume 1000 hours)				1,000	$0.00		
		2.19 Claims Management (Assume 500 hours)				500	$0.00		
		2.20 Specialized Scheduling Services (Assume 500 hours)				500	$0.00		
		2.21 Independent Estimating Services (Assume 2200 hours)				2,200	$0.00		
		2.22 Safety Programs (Assume 1000 hours)				1,000	$0.00		
							$0.00		
							$0.00		
		Estimated Amount for this task					$0.00		
3. POST-CONSTRUCTION SERVICES	Post-Construction Services as described in Tasks 3.1 and 3.2 of the Project Scope of Work	Senior Construction Manager (full time)						960	$0.00
		Field Office Engineer (full time)						960	$0.00
		Document Control/Clerical (full time)						960	$0.00
		Estimated Amount for this task							$0.00
4. OTHER SERVICES	4.1 Partnering Facilitation Services as described in the Project Scope of Work						Estimated Amount		$150,000.00
	4.3 Additional As-Needed Services as described in the Project Scope of Work						Estimated Amount		$500,000.00

Maximum Agreement Compensation **$650,000.00**

Notes:

Proposer to enter information only in shaded cells.

Enter additional resources as necessary.



THE PORT OF LOS ANGELES

ENGINEERING DIVISION

TERMINAL ISLAND
MARITIME SUPPORT FACILITY

SPECIFICATION NO. 2844

NO.	DATE	DRAWN	REVISIONS -	CHK'D	APP'D
A	3/20/25	-	30% CONCEPTUAL DESIGN		
B	4/25/25	-	FINAL CONCEPTUAL DESIGN		
C	7/18/25	-	40% DESIGN		
D	9/19/25	-	80% DESIGN		

NOT FOR CONSTRUCTION

Jacobs
2600 MICHELSON DRIVE, SUITE 500
IRVINE, CA 92612
T: (949) 224-7500
F: (949) 224-7501

80% DESIGN REVIEW
SEP 19 , 2025

CONSTRUCTION DIVISION		TRANS	R/W	ARCH	SPECS	CHIEF OF DESIGN
INSPECTION	SURVEY	WATERFRONT	CIVIL	ELEC	PR MNGR	ASSISTANT CHIEF HARBOR ENGINEER
CHIEF HARBOR ENGINEER - CONST DIV.			STRUCT	MECH	CAD MNGR	CHIEF HARBOR ENGINEER DATE

TERMINAL ISLAND MARITIME SUPPORT FACILITY

COVER SHEET

THE PORT OF LOS ANGELES
ENGINEERING DIVISION
425 S. PALOS VERDES STREET SAN PEDRO CA 90731-3309

DRAWING NUMBER 1-3513

SHEET NUMBER T-01

DWG: C:\Users\TRUJILA\DOCACCDocs\Jacobs\US CA_D3371901_POLA TIMSP\Project Files\30 PROJECT DATA\WIP\GENERAL\Drawings\1-3513 T-01.dwg USER: TRUJILA
DATE: Sep 19, 2025 2:25pm
POLAPRD1_04/2023_BWD

CITY OF LOS ANGELES PERMITTING REQUIREMENTS:

1. PROPERTY OWNER: CITY OF LOS ANGELES HARBOR DEPARTMENT
PORT OF LOS ANGELES
425 SOUTH PALOS VERDES STREET
SAN PEDRO, CALIFORNIA 90731
PHONE: (310) 732-3590 FAX: (310) 519-0178

2. CIVIL / ARCHITECT / ELECTRICAL / TELECOMMUNICATIONS: JACOBS
2600 MICHELSON DRIVE, SUITE 500
IRVINE, CALIFORNIA 92612
PHONE: (949) 224-7500 FAX: (949) 224-7501

3. GEOTECHNICAL: EARTH MECHANICS, INC.
461 W. 6TH STREET, SUITE 203
PHONE: (310) 519-3947 FAX: (310) 519-1197

4. STRUCTURAL: CORNERSTONE STRUCTURAL ENGINEERING GROUP
986 W. ALLUVIAL AVENUE, SUITE 201
FRESNO, CALIFORNIA 93711
PHONE: (559) 320-3200 FAX: (559) 320-3201

5. MEPT: IDS GROUP
1 PETERS CANYON ROAD, SUITE 130
IRVINE, CALIFORNIA 92606
PHONE: (949) 387-8500 FAX: (949) 387-0800

6. JOB ADDRESS: TERMINAL ISLAND, 740 TERMINAL WAY
SAN PEDRO, CALIFORNIA 90731

7. LEGAL DESCRIPTION (FOR JOB ADDRESS)

ALL THE LAND IN THE CITY OF LOS ANGELES, COUNTY OF LOS ANGELES, STATE OF CALIFORNIA WITHIN THE RANCHO LOS PALOS VERDES, INNER BAY OF SAN PEDRO AND PACIFIC OCEAN AS SHOWN ON THE MAP RECORDED IN BOOK 2, PAGES 543 THROUGH 545, OF PATENTS, TOGETHER WITH THOSE PORTIONS WITHIN THE RANCHO SAN PEDRO AS SHOWN ON THE MAP RECORDED IN BOOK 1, PAGES 119 THROUGH 121, OF PATENTS, BOTH IN THE OFFICE OF THE COUNTY RECORDER OF SAID COUNTY.

VICINITY MAP

REFERENCING SYSTEM

MAIN PLAN & ELEVATIONS
1A-01 / A-01
- DETAIL NUMBER OF PLAN OR ELEVATION NUMBERED CONSECUTIVELY ON EACH SHEET.
- SHEET NUMBER WHERE PLAN OR ELEVATION IS DRAWN.

MAIN DETAIL, FLAG-SECTIONS & DETAILS
2A-03 / 1A-01
- DETAIL NUMBER OF SECTION OR ELEVATION NUMBERED CONSECUTIVELY ON EACH SHEET.
- SHEET NUMBER WHERE SECTION OR ELEVATION IS DRAWN.
- DETAIL & SHEET NUMBER WHERE SECTION OR DETAIL REFERENCE ORIGINATED.

SUB-DETAIL, FLAG-INTERIOR, ELEVATIONS & DETAILS
A / 2A-04
- SUB-DETAIL NUMBER OF INTERIOR ELEVATION OR DETAIL CONSECUTIVELY LISTED ALPHABETICALLY.
- DETAIL & SHEET NUMBER WHERE SUB-DETAIL REFERENCE ORIGINATED.

REFERENCE FLAG
2A-05
- DETAIL & SHEET NUMBER WHERE DETAIL, SECTION DETAIL OR ELEVATION IS DRAWN.

SECTION FLAG
2A-05
- ARROW INDICATES DIRECTION OF CUT-VIEW.
- DETAIL & SHEET NUMBER WHERE SECTION OR DETAIL IS DRAWN.

A / D X B / C
- INTERIOR ELEVATION CALLOUT.
- DRAWN ELEVATION CALLOUT WHERE MULTI ELEVATION OCCURS.

REVISION SYMBOL
A
- REVISION NUMBER (ALPHABETIC DESIGNATION-PRIOR TO BID OPENING. NUMERIC DESIGNATION APPROVED DURING CONSTRUCTION).
- CLOUDED AREA DESIGNATES REVISED AREA.

INDEX TO DRAWINGS

DRAWING NUMBER	TITLE	DRAWING NUMBER	TITLE
	GENERAL	UR-09	UTILITY REMOVAL PLAN - AREA 8
T-01	COVER SHEET	UR-10	UTILITY REMOVAL PLAN - AREA 9
T-02	INDEX TO DRAWINGS, VICINITY MAP	UR-11	UTILITY REMOVAL PLAN - AREA 10
T-03	INDEX TO DRAWINGS		
T-04	INDEX TO DRAWINGS		**GRADING & PAVING**
GN-01	GENERAL NOTES	GP-01	GRADING & PAVING KEY PLAN AND NOTES
GN-02	GENERAL NOTES (NOT USED)	GP-02	GRADING & PAVING PLAN - AREA 1
GN-03	ABBREVIATIONS	GP-03	GRADING & PAVING PLAN - AREA 2
GN-04	LEGEND AND SYMBOLS	GP-04	GRADING & PAVING PLAN - AREA 3
CC-01	HORIZONTAL COORDINATE CONTROL MAP	GP-05	GRADING & PAVING PLAN - AREA 4
CC-02	SITE PLAN - OVERALL	GP-06	GRADING & PAVING PLAN - AREA 5
CC-03	SITE PLAN - AREA 1	GP-07	GRADING & PAVING PLAN - AREA 6
CC-04	SITE PLAN - AREA 2	GP-08	GRADING & PAVING PLAN - AREA 7
		GP-09	GRADING & PAVING PLAN - AREA 8
	PHASING	GP-10	GRADING & PAVING PLAN - AREA 9
PH-01	PHASING PLAN	GP-11	GRADING & PAVING PLAN - AREA 10
		GP-12	GRADING & PAVING PLAN - AREA 11 (NOT USED)
	EROSION CONTROL	GP-13	GRADING & PAVING ENLARGED PLAN
C-01	EROSION CONTROL KEY PLAN AND NOTES	GP-14	GRADING & PAVING ENLARGED PLAN
C-02	EROSION CONTROL PLAN - AREA 1	GP-15	GRADING & PAVING ENLARGED PLAN
C-03	EROSION CONTROL PLAN - AREA 2	GP-16	TYPICAL GRADING CROSS-SECTIONS
C-04	EROSION CONTROL DETAILS	GP-17	TYPICAL GRADING CROSS-SECTIONS
		GP-18	GRADING & PAVING SECTIONS (NOT USED)
	REMOVALS	GP-19	GRADING & PAVING SECTIONS (NOT USED)
R-01	REMOVAL KEY PLAN AND NOTES	GP-20	GRADING & PAVING DETAILS
R-02	REMOVAL PLAN - AREA 1	GP-21	GRADING & PAVING DETAILS
R-03	REMOVAL PLAN - AREA 2	GP-22	GRADING & PAVING DETAILS
R-04	REMOVAL PLAN - AREA 3	GP-23	GRADING & PAVING DETAILS
R-05	REMOVAL PLAN - AREA 4	GP-24	GRADING & PAVING COORDINATE POINT TABLE
R-06	REMOVAL PLAN - AREA 5		
R-07	REMOVAL PLAN - AREA 6		**COMPOSITE UTILITY**
R-08	REMOVAL PLAN - AREA 7	U-01	COMPOSITE UTILITY KEY PLAN AND NOTES
R-09	REMOVAL PLAN - AREA 8	U-02	COMPOSITE UTILITY PLAN - AREA 1
R-10	REMOVAL PLAN - AREA 9	U-03	COMPOSITE UTILITY PLAN - AREA 2
R-11	REMOVAL PLAN - AREA 10		
R-12	REMOVAL DETAILS		**STORM DRAIN**
		SD-01	STORM DRAIN KEY PLAN AND NOTES
	UTILITY REMOVALS	SD-02	STORM DRAIN PLAN - AREA 1
UR-01	UTILITY REMOVAL KEY PLAN AND NOTES	SD-03	STORM DRAIN PLAN - AREA 2
UR-02	UTILITY REMOVAL PLAN - AREA 1	SD-04	STORM DRAIN PLAN - AREA 3
UR-03	UTILITY REMOVAL PLAN - AREA 2	SD-05	STORM DRAIN PLAN - AREA 4
UR-04	UTILITY REMOVAL PLAN - AREA 3	SD-06	STORM DRAIN PLAN - AREA 5
UR-05	UTILITY REMOVAL PLAN - AREA 4		FOR CONTINUATION, SEE SHEET NO. T-03
UR-06	UTILITY REMOVAL PLAN - AREA 5		
UR-07	UTILITY REMOVAL PLAN - AREA 6		*REFERENCE DRAWINGS ARE AVAILABLE FOR REVIEW IN THE DEPARTMENTS WEB-BASED BID MANAGEMENT SYSTEM SEE SPECIFICATIONS FOR DETAILS
UR-08	UTILITY REMOVAL PLAN - AREA 7		

NO.	DATE	DRAWN	REVISIONS -	CHK'D	APP'D
A	3/20/25	-	30% CONCEPTUAL DESIGN		
B	4/25/25	-	FINAL CONCEPTUAL DESIGN		
C	7/18/25	-	40% DESIGN		
D	9/19/25	-	80% DESIGN		

NOT FOR CONSTRUCTION

NO.	DATE	DRAWN	REVISIONS -	CHK'D	APP'D
			80% DESIGN REVIEW SEP 19 , 2025		

Jacobs
2600 MICHELSON DRIVE, SUITE 500
IRVINE, CA 92612
T: (949) 224-7500
F: (949) 224-7501

REGISTERED PROFESSIONAL ENGINEER — MICHAEL S. MCAMIS — No. 60573 — CIVIL — STATE OF CALIFORNIA

SCALE: NONE
DRAWN: E. FLORES
CHECKED: G. NGUYEN
DESIGNED: S. MCAMIS
ENGINEER / ARCHITECT

TERMINAL ISLAND MARITIME SUPPORT FACILITY

INDEX TO DRAWINGS, VICINITY MAP

THE PORT OF LOS ANGELES
ENGINEERING DIVISION
425 S. PALOS VERDES STREET SAN PEDRO CA 90731-3309

DRAWING NUMBER 1-3513
SHEET NUMBER T-02

POLAPRDT_04/2023_BWD

INDEX TO DRAWINGS

DRAWING NUMBER	TITLE
SD-07	STORM DRAIN PLAN - AREA 6
SD-08	STORM DRAIN PLAN - AREA 7
SD-09	STORM DRAIN PLAN - AREA 8
SD-10	STORM DRAIN PLAN - AREA 9
SD-11	STORM DRAIN PROFILE - 1
SD-12	STORM DRAIN PROFILE - 2
SD-13	STORM DRAIN PROFILE - 3
SD-14	STORM DRAIN PROFILE - 4
SD-15	STORM DRAIN PROFILE - 5
SD-16	STORM DRAIN PROFILE - 6
SD-17	STORM DRAIN PROFILE - 7
SD-18	STORM DRAIN DETAILS
SD-19	STORM DRAIN DETAILS
SD-20	SD DETAILS - TRENCHLESS CROSSING
	SEWER
SS-01	SEWER KEY PLAN AND NOTES
SS-02	SEWER PLAN - AREA 1 (NOT USED)
SS-03	SEWER PLAN - AREA 2
SS-04	SEWER PLAN - AREA 3 (NOT USED)
SS-05	SEWER PLAN - AREA 4 (NOT USED)
SS-06	SEWER PLAN - AREA 5 (NOT USED)
SS-07	SEWER PLAN - AREA 6
SS-08	SEWER PLAN - AREA 7
SS-09	SEWER PLAN - AREA 8
SS-10	SEWER PLAN - AREA 9 (NOT USED)
SS-11	SEWER PLAN - AREA 10 (NOT USED)
SS-12	SEWER PROFILE - 1
SS-13	SEWER PROFILE - 2
SS-14	TRENCHLESS PLAN & PROFILE DETAIL
SS-15	SEWER DETAILS (NOT USED)
SS-16	SEWER DETAILS (NOT USED)
SS-17	SEWER DETAILS
SS-18	SEWER DETAILS
SS-19	SEWER DETAILS
SS-20	SEWER DETAILS (NOT USED)
SS-21	SEWER DETAILS (NOT USED)
SS-22	SEWER DETAILS (NOT USED)
SS-23	SEWER COORDINATE POINT TABLE
	WATER
W-01	WATER KEY PLAN AND NOTES
W-02	WATER PLAN - AREA 1
W-03	WATER PLAN - AREA 2
W-04	WATER PLAN - AREA 3
W-05	WATER PLAN - AREA 4
W-06	WATER PLAN - AREA 5
W-07	WATER PLAN - AREA 6
W-08	WATER PLAN - AREA 7
W-09	WATER PLAN - AREA 8
W-10	WATER PLAN - AREA 9
W-11	WATER PLAN - AREA 10
W-12	WATER PROFILE - 1
W-13	WATER PROFILE - 2
W-14	WATER PROFILE - 3 (NOT USED)
W-15	WATER PROFILE - 4 (NOT USED)
W-16	WATER DETAILS
W-17	WATER DETAILS
W-18	WATER DETAILS
W-19	WATER DETAILS (NOT USED)
W-20	WATER DETAILS (NOT USED)
W-21	WATER COORDINATE POINT TABLE
	ELECTRICAL (SITE)
E-01	ELECTRICAL NOTES AND ABBREVIATIONS
E-02	ELECTRICAL KEY PLAN AND NOTES
E-03	ELECTRICAL PLAN - AREA 1
E-04	ELECTRICAL PLAN - AREA 2
E-05	ELECTRICAL PLAN - AREA 3
E-06	ELECTRICAL PLAN - AREA 4
E-07	ELECTRICAL PLAN - AREA 5
E-08	ELECTRICAL PLAN - AREA 6
E-09	ELECTRICAL PLAN - AREA 7
E-10	ELECTRICAL PLAN - AREA 8
E-11	ELECTRICAL PLAN - AREA 9
E-12	ELECTRICAL PLAN - AREA 10
E-13	ELECTRICAL DETAILS
E-14	ELECTRICAL DETAILS
E-15	ELECTRICAL DETAILS
E-16	ELECTRICAL DETAILS
E-17	ELECTRICAL DETAILS
E-18	ELECTRICAL DETAILS
E-19	ELECTRICAL DETAILS
E-20	SINGLE LINE DIAGRAM
E-21	SINGLE LINE DIAGRAM
E-22	SINGLE LINE DIAGRAM
E-23	ELECTRICAL ENLARGED PLAN - UNIT SUBSTATION
E-24	ELECTRICAL ENLARGED PLAN - UNIT SUBSTATION
E-25	ELECTRICAL ENLARGED PLAN - UNIT SUBSTATION
E-26	CONDUIT SCHEDULE
E-27	CONDUIT SCHEDULE
E-28	DUCTBANK SECTION
E-29	DUCTBANK SECTION
E-30	ELECTRICAL LIGHTING PHOTOMETRY PLAN
	TELECOMMUNICATION (SITE)
TL-01	TELECOM KEY NOTES AND ABBREVIATIONS (NOT USED)
TL-02	TELECOM KEY PLAN AND NOTES
TL-03	TELECOM PLAN - AREA 1
TL-04	TELECOM PLAN - AREA 2
TL-05	TELECOM PLAN - AREA 3
TL-06	TELECOM PLAN - AREA 4
TL-07	TELECOM PLAN - AREA 5
TL-08	TELECOM PLAN - AREA 6
TL-09	TELECOM PLAN - AREA 7
TL-10	TELECOM PLAN - AREA 8
TL-11	TELECOM PLAN - AREA 9
TL-12	TELECOM PLAN - AREA 10
	ARCHITECTURAL
A-0.0	ARCHITECTURAL SITE PLAN & CODE ANALYSIS
A-0.1	ARCHITECTURAL NOTES
A-0.2	ARCHITECTURAL NOTES
A-0.3	ARCHITECTURAL NOTES
A-0.4	ARCHITECTURAL NOTES
A-0.5	ARCHITECTURAL NOTES
A-0.6	ADA STANDARDS
A-0.7	ADA STANDARDS
A-0.8	ACCESSIBILITY DETAILS
A-0.9	ACCESSIBILITY DETAILS
A-0.10	ACCESSIBILITY DETAILS
A-0.11	LADBS GREEN BUILDING CODE CHECKLIST
A-1.0	FLOOR PLAN & RCP - GUARD BOOTH
A-1.1	PLANS, RCP, & INT. ELEV. - RESTROOM BUILDING
A-1.2	ROOF PLAN - RESTROOM BUILDING
A-1.3	FLOOR PLAN - ROADABILITY CANOPY
A-1.4	REFLECTED CEILING PLAN - ROADABILITY CANOPY
A-1.5	ROOF PLAN - ROADABILITY CANOPY
A-2.0	BUILDING ELEVATIONS - GUARD BOOTH
A-2.1	BUILDING ELEVATIONS - RESTROOM BUILDING
A-2.2	BUILDING ELEVATIONS - ROADABILITY CANOPY
A-3.1	BUILDING SECTIONS - RESTROOM BUILDING
A-3.2	BUILDING SECTIONS - ROADABILITY CANOPY
A-8.0	SCHEDULES (DOOR, LOUVER AND FINISH)
A-9.0	TYPICAL DETAILS - EXTERIOR - RESTROOM BUILDING
A-9.1	TYPICAL DETAILS - EXTERIOR - ROADABILITY CANOPY
A-9.2	TYPICAL DETAILS - INTERIOR - RESTROOM BUILDING
	STRUCTURAL (BUILDING)
S-0.1	PROJECT INFORMATION
S-0.2	MATERIAL SPECIFICATIONS
S-0.3	TESTING & SPECIAL INSPECTIONS
S-0.4	TYPICAL DETAILS NO. 1
S-0.5	TYPICAL DETAILS NO. 2
S-0.6	TYPICAL DETAILS NO. 3
S-0.7	TYPICAL DETAILS NO. 4
S-0.8	TYPICAL DETAILS NO. 5
S-0.9	TYPICAL DETAILS NO. 6
S-1.1	CANOPY FOUNDATION PLAN
S-1.2	CANOPY ROOF FRAMING PLAN
S-1.3	RESTROOM FOUNDATION & ROOF FRAMING PLAN
S-3.1	CANOPY SECTION
S-7.1	CANOPY DETAILS
S-7.2	RESTROOM DETAILS
S-7.3	PRECAST PILE DETAILS
S-7.4	ELECTRICAL EQUIPMENT FOUNDATIONS
S-7.5	100' LIGHT POLE FOUNDATION
	MECHANICAL (BUILDING)
M-01	MECHANICAL GEN. NOTES, LEGEND AND ABBREV.
M-02	MECHANICAL EQUIPMENT SCHEDULE AND DETAILS
M-03	MECHANICAL FLOOR / ROOF PLAN - WASHROOM
	ELECTRICAL (BUILDING)
AE-01	ELECTRICAL SYMBOL LIST SHEET INDEX
AE-02	ELECTRICAL GENERAL NOTES
AE-03	SINGLE LINE DIAGRAM - ROADABILITY CANOPY
AE-04	SINGLE LINE DIAGRAM - WASHROOM
AE-05	LIGHTING FIXTURE SCHEDULE AND SPECS
AE-06	ELECTRICAL DETAILS
AE-06A	ELECTRICAL LIGHTING CONTROL DETAILS
AE-07	ELECTRICAL ROADABILITY CANOPY PLAN - POWER
AE-08	ELECTRICAL ROADABILITY CANOPY PLAN - LIGHTING
AE-09	ROADABILITY CANOPY PLAN - PHOTOMETRIC
	FOR CONTINUATION, SEE SHEET NO. T-04

NO.	DATE	DRAWN	REVISIONS -	CHK'D	APP'D
A	3/20/25	-	30% CONCEPTUAL DESIGN		
B	4/25/25	-	FINAL CONCEPTUAL DESIGN		
C	7/18/25	-	40% DESIGN		
D	9/19/25	-	80% DESIGN		

NOT FOR CONSTRUCTION

NO.	DATE	DRAWN	REVISIONS -	CHK'D	APP'D
			80% DESIGN REVIEW SEP 19 , 2025		

Jacobs
2600 MICHELSON DRIVE, SUITE 500
IRVINE, CA 92612
T: (949) 224-7500
F: (949) 224-7501

REGISTERED PROFESSIONAL ENGINEER
MICHAEL S. McAMIS
No. 60573
CIVIL
STATE OF CALIFORNIA

SCALE:	NONE
DRAWN:	E. FLORES
CHECKED:	G. NGUYEN
DESIGNED:	S. MCAMIS
	ENGINEER / ARCHITECT

TERMINAL ISLAND MARITIME SUPPORT FACILITY

INDEX TO DRAWINGS

THE PORT OF LOS ANGELES
ENGINEERING DIVISION
425 S. PALOS VERDES STREET SAN PEDRO CA 90731-3309

DRAWING NUMBER	SHEET NUMBER
1-3513	T-03

POLAPR01_040223_BWD

INDEX TO DRAWINGS

DRAWING NUMBER	TITLE
AE-10	ELECTRICAL FLOOR PLAN - WASHROOM
AE-11.1	ELECTRICAL T24 INDOOR FORMS
AE-11.2	ELECTRICAL T24 OUTDOOR FORMS
AE-11.3	ELECTRICAL T24 OUTDOOR FORMS
	PLUMBING
PL-01	NOTES, ABRREV., LEGEND & APPLICABLE CODES
PL-02	GENERAL NOTES
PL-03	SCHEDULES
PL-04	PLUMBING SITE PLAN
PL-05	PLUMBING FLOOR PLAN - WASHROOM
PL-06	PLUMBING FLOOR PLAN - ROADABILITY CANOPY
PL-07	PLUMBING DETAILS
	STRIPING, SIGNAGE & FENCING
SP-01	STRIPING, SIGNAGE & FENCING KEY PLAN AND NOTES
SP-02	STRIPING, SIGNAGE & FENCING PLAN - AREA 1
SP-03	STRIPING, SIGNAGE & FENCING PLAN - AREA 2
SP-04	STRIPING, SIGNAGE & FENCING PLAN - AREA 3
SP-05	STRIPING, SIGNAGE & FENCING PLAN - AREA 4
SP-06	STRIPING, SIGNAGE & FENCING PLAN - AREA 5
SP-07	STRIPING, SIGNAGE & FENCING PLAN - AREA 6
SP-08	STRIPING, SIGNAGE & FENCING PLAN - AREA 7
SP-09	STRIPING, SIGNAGE & FENCING PLAN - AREA 8
SP-10	STRIPING, SIGNAGE & FENCING PLAN - AREA 9
SP-11	STRIPING, SIGNAGE & FENCING PLAN - AREA 10
SP-12	STRIPING DETAILS
SP-13	STRIPING DETAILS (NOT USED)
SP-14	SIGNAGE DETAILS
SP-15	SIGNAGE DETAILS
SP-16	SIGNAGE DETAILS (NOT USED)
SP-17	FENCING DETAILS
SP-18	FENCING DETAILS
SP-19	FENCING DETAILS
SP-20	FENCING DETAILS
SP-21	FENCING DETAILS
SP-22	STRIPING, SIGNAGE & FENCING COORDINATE POINT TABLE

DRAWING NUMBER	TITLE

DRAWING NUMBER	TITLE

DRAWING NUMBER	TITLE
	*REFERENCE DRAWINGS
1-1472	SEASIDE AVE STORM DRAIN
1-1555	REEVES FIELD SITE DEVELOPMENT
1-1570	PILCHARD ST WATER MAIN & SERVICE
1-2016	BERTH 301 BACKLAND IMPROVEMENTS
1-2033	TERMINAL WAY REALIGNMENT
1-2098	TERMINAL & REEVE
1-2661	US CUSTOMS HOUSE LAB PHASE 1
1-2779	BERTH 301 DEMOLITION
1-3475	LAXT CARGO SUPPORT FACILITY
K582 1-2016	BERTH 301 REFERENCE DRAWING

NO.	DATE	DRAWN	REVISIONS -	CHK'D	APP'D
A	3/20/25	-	30% CONCEPTUAL DESIGN		
B	4/25/25	-	FINAL CONCEPTUAL DESIGN		
C	7/18/25	-	40% DESIGN		
D	9/19/25	-	80% DESIGN		

NOT FOR CONSTRUCTION

NO.	DATE	DRAWN	REVISIONS -	CHK'D	APP'D
			80% DESIGN REVIEW SEP 19 , 2025		

Jacobs
2600 MICHELSON DRIVE, SUITE 500
IRVINE, CA 92612
T: (949) 224-7500
F: (949) 224-7501

REGISTERED PROFESSIONAL ENGINEER — MICHAEL S. McAMIS — No. 60573 — CIVIL — STATE OF CALIFORNIA

SCALE: NONE
DRAWN: E. FLORES
CHECKED: G. NGUYEN
DESIGNED: S. MCAMIS
ENGINEER / ARCHITECT

TERMINAL ISLAND MARITIME SUPPORT FACILITY

INDEX TO DRAWINGS

THE PORT OF LOS ANGELES
ENGINEERING DIVISION
425 S. PALOS VERDES STREET SAN PEDRO CA 90731-3309

DRAWING NUMBER: 1-3513
SHEET NUMBER: T-04

POLAPROT_040223_BWD

GENERAL NOTES:

1. CONTRACTOR SHALL BE SPECIFICALLY CAUTIONED THAT THE LOCATION AND ELEVATION OF EXISTING UTILITIES AND STRUCTURES, AS SHOWN ON THESE PLANS, IS BASED ON RECORDS OF VARIOUS UTILITY COMPANIES AND, WHERE POSSIBLE, MEASUREMENTS TAKEN IN THE FIELD. THIS INFORMATION IS NOT TO BE RELIED ON AS BEING EXACT OR COMPLETE. CONTRACTOR, PRIOR TO THE START OF CONSTRUCTION, SHALL VERIFY, VIA POTHOLE OR OTHER MEANS, THE LOCATION OF ALL UNDERGROUND UTILITIES AND STRUCTURES IN THE FIELD. CONTRACTOR SHALL CONTACT THE APPROPRIATE UTILITY COMPANY, ANY GOVERNING PERMITTING AUTHORITY, AND "CALL 811" AT LEAST 2 WORKING DAYS PRIOR TO ANY EXCAVATION WORK TO REQUEST THE EXACT FIELD LOCATION OF UTILITIES. ENGINEER SHALL BE NOTIFIED, IN WRITING, OF ANY UTILITIES INTERFERING WITH THE PROPOSED CONSTRUCTION AND APPROPRIATE REMEDIAL ACTIONS TAKEN BEFORE PROCEEDING WITH WORK. CONTRACTOR SHALL BE RESPONSIBLE TO RELOCATE ALL EXISTING UTILITIES WHICH CONFLICT WITH THE PROPOSED IMPROVEMENTS SHOWN ON THE PLAN.
2. NO WORK SHALL COMMENCE UNTIL THE APPROPRIATE CITY INSPECTOR FOR STRUCTURAL, GRADING, PLUMBING, AND ELECTRICAL HAS BEEN NOTIFIED. NOTIFY ALL APPROPRIATE LADBS INSPECTORS PRIOR TO COMMENCING WORK.
3. CONTRACTOR SHALL BE RESPONSIBLE FOR ESTABLISHING AND MAINTAINING ALL CONTROL POINTS AND BENCH MARKS NECESSARY FOR WORK.
4. CONTRACTOR SHALL BE RESPONSIBLE FOR OBTAINING AND THE PORT WILL PAY FOR ANY CITY AGENCY PERMITS AND/OR CONNECTION FEES REQUIRED TO CARRY OUT WORK INCLUDING, BUT NOT LIMITED TO, DEMOLITION. CONTRACTOR SHALL BE RESPONSIBLE FOR OTHER AGENCY PERMIT FEES.
5. CONTRACTOR SHALL BE RESPONSIBLE FOR THE DISPOSAL OF DEMOLISHED MATERIALS AND SHALL BE HAULED OFF-SITE IN CONFORMANCE WITH FEDERAL, STATE, AND LOCAL MUNICIPAL REQUIREMENTS.
6. CONTRACTOR SHALL PROTECT AND/OR CAP OFF ALL EXISTING ON-SITE UTILITY SERVICES DESIGNATED ON THESE DRAWINGS. SERVICES SHALL BE CAPPED OFF WHERE THEY ENTER THE PERIMETER OF THE REMOVAL LIMITS. CONTRACTOR SHALL PROVIDE 3D SURVEY OF POINTS WHERE UTILITIES ARE CAPPED.
7. THE LIMIT OF WORK LINE FOR THE AREA TO BE CLEARED AND GRUBBED SHALL BE THE SAME AS THE LIMIT OF WORK LINE NECESSARY FOR GRADING PURPOSES, IE, THE GRADING LIMITS AROUND THE PERIMETER OF THE PROJECT AREA.
8. THE AREA, OR AREAS, OF ENTRANCE AND EXIT, TO AND FROM PROJECT SITE, SHALL BE CLEARED OF VEGETATION, ROOTS, AND OTHER OBJECTIONABLE MATERIAL AS DETERMINED BY ENGINEER.
9. THE AREA, OR AREAS, OF ENTRANCE AND EXIT, TO AND FROM PROJECT SITE, SHALL BE STABILIZED AND MAINTAINED IN A CONDITION THAT WILL PREVENT TRACKING OR FLOWING OF SEDIMENT ONTO PUBLIC RIGHTS-OF-WAY. ACCIDENTAL DEPOSITIONS OF SEDIMENT THAT IS WASHED, TRACKED OR DROPPED IN A PUBLIC RIGHT-OF-WAY SHALL BE SWEPT UP IMMEDIATELY AND MAY NOT BE WASHED DOWN BY RAIN OR OTHER MEANS.
10. EROSION AND SEDIMENTATION CONTROL MEASURES SHALL BE CONSTRUCTED IN CONFORMANCE WITH THE CALIFORNIA ENVIRONMENTAL PROTECTION AGENCY, STATE WATER RESOURCES CONTROL BOARD "EROSION & SEDIMENT CONTROL FIELD MANUAL", REVISED 2002 AND THE CONSTRUCTION GENERAL PERMIT (MOST RECENT ADDITION) 2009, AMENDED 2022.
11. EROSION AND SEDIMENTATION CONTROL MEASURES SHALL BE IN PLACE PRIOR TO THE COMMENCEMENT OF ANY PROJECT SITE WORK OR EARTHWORK OPERATIONS, SHALL BE MAINTAINED DURING CONSTRUCTION, AND SHALL REMAIN IN PLACE UNTIL PROJECT SITE WORK IS COMPLETE AND GROUNDCOVER IS ESTABLISHED.
12. ALL STOCKPILES SHALL BE PROTECTED FROM EROSION AND SILTATION FOR THE DURATION OF THE PROJECT. PRIOR TO ANY EXCAVATION, RUNOFF SHALL BE DIVERTED AWAY FROM DISTURBED AND STOCKPILED AREAS. APPROVED PERMANENT EROSION PROTECTION DEVICES SHALL BE USED WHEN EROSION EXPOSURE PERIOD IS EXPECTED TO BE GREATER THAN OR EQUAL TO 6 MONTHS, AND APPROVED TEMPORARY EROSION PROTECTION DEVICES MAY BE USED WHEN THE EROSION EXPOSURE PERIOD IS EXPECTED TO BE LESS THAN 6 MONTHS. NO LOAM OR TOPSOIL SHALL BE REMOVED FROM PROJECT SITE WITHOUT THE WRITTEN PERMISSION OF ENGINEER.
13. DISTURBED, OR EXPOSED, AREAS SUBJECT TO EROSION SHALL BE STABILIZED WITH MULCH OR SEEDED FOR TEMPORARY VEGETATIVE COVER. NO AREA SUBJECT TO EROSION SHALL BE LEFT DISTURBED AND UNSTABILIZED FOR PERIODS LONGER THAN IS ABSOLUTELY NECESSARY TO CARRY OUT THAT PORTION OF THE CONSTRUCTION WORK OR 6 MONTHS AFTER SOIL HAS BEEN DISTURBED, WHICHEVER IS LESS.
14. EARTHWORK ACTIVITY ON THE SITE SHALL BE DONE IN SUCH A MANNER THAT RUNOFF IS DIRECTED TO TEMPORARY DRAINAGE SWALES AND SEDIMENTATION BASINS AS DESCRIBED IN THE CONTRACT DOCUMENTS AND AS NEEDED. TEMPORARY DRAINAGE SWALES AND SEDIMENTATION TRAPS SHALL BE RELOCATED AS REQUIRED AS CONSTRUCTION PROGRESSES IN CONFORMANCE WITH THE ABOVE-REFERENCED STANDARDS.
15. APPROVED EROSION CONTROL DEVICES SHALL PROTECT CULVERT INLETS AND OUTFALLS AND SHALL BE CONSTRUCTED AT DRAINAGE INLET STRUCTURES SUBJECT TO STORMWATER RUNOFF.
16. NO SEDIMENT SHALL ENTER THE ON-SITE, OR OFF-SITE, DRAINAGE SYSTEMS AT ANY TIME.
17. FUELS, OILS, SOLVENTS AND OTHER TOXIC MATERIALS MUST BE STORED IN ACCORDANCE WITH THEIR LISTING AND ARE NOT TO CONTAMINATE THE SOIL NOR THE SURFACE WATERS. APPROVED TOXIC STORAGE CONTAINERS ARE TO BE PROTECTED FROM THE WEATHER. SPILLS MUST BE CLEANED UP IMMEDIATELY AND DISPOSED OF IN A PROPER MANNER. SPILLS MAY NOT BE WASHED INTO THE DRAINAGE SYSTEM.
18. NON-STORM WATER RUNOFF FROM EQUIPMENT AND VEHICLE WASHING AND ANY OTHER ACTIVITY SHALL BE CONTAINED AT PROJECT SITE.
19. EXCESS OR WASTE CONCRETE MAY NOT BE WASHED INTO THE PUBLIC WAY OR ANY DRAINAGE SYSTEM. PROVISIONS SHALL BE MADE TO RETAIN CONCRETE WASTES IN CONCRETE WASHOUTS ON-SITE UNTIL THE CONCRETE WASTE CAN BE APPROPRIATELY DISPOSED OF OR RECYCLED.
20. TRASH AND CONSTRUCTION-RELATED SOLID WASTES SHALL BE DEPOSITED INTO A COVERED RECEPTACLE TO PREVENT CONTAMINATION OF RAINWATER AND DISPERSAL BY WIND.
21. THROUGHOUT CONSTRUCTION EROSION CONTROL MEASURES SHALL BE INSPECTED WEEKLY AND PRIOR TO AND IMMEDIATELY AFTER STORM EVENTS TO ENSURE THAT BEST MANAGEMENT PRACTICES ARE PROPERLY CLEANED AND REPAIRED OR REPLACED.
22. CONTRACTOR SHALL KEEP, ON SITE AT ALL TIMES, ADDITIONAL EROSION CONTROL DEVICES FOR INSTALLATION AT THE DIRECTION OF ENGINEER OR AUTHORITY HAVING JURISDICTION TO MITIGATE ANY EMERGENCY CONDITION.
23. SAFE CONSTRUCTION EXCAVATION SLOPES AND SHORING ARE THE RESPONSIBILITY OF THE CONTRACTOR AND SHALL COMPLY WITH ALL OSHA AND OTHER APPLICABLE SAFETY REGULATIONS.
24. SLOPES STEEPER THAN 3:1 SHALL BE STABILIZED AND PROTECTED FROM EROSION WITH AN APPROVED SLOPE STABILIZATION DEVICE.
25. DISTURBED AREAS OUTSIDE THE LIMITS OF WORK SHALL BE RESTORED TO THEIR ORIGINAL CONDITION, UNLESS OTHERWISE NOTED.
26. ITEMS WITHIN THE LIMIT OF WORK NOT SPECIFICALLY CALLED OUT TO BE DEMOLISHED SHALL BE PROTECTED.
27. CONTRACTOR SHALL NOTE THE PRESENCE OF DWP POLES AND OVERHEAD POWER LINES WITHIN THE PROJECT SITE AND SHALL USE EXTREME CAUTION WHEN WORKING IN THEIR VICINITY. CONTRACTOR SHALL MAINTAIN PROPER CLEARANCES FROM DWP FACILITIES WHEN WORKING IN THEIR VICINITY.
28. WHERE CROSSING ANY EXISTING SUBSTRUCTURES WITH NEW SUBSURFACE IMPROVEMENTS, CONTRACTOR SHALL TRENCH CAREFULLY TO LOCATE ACTIVE AND IDLE SUBSTRUCTURES AT THESE CROSSINGS.
29. CONTRACTOR SHALL BE RESPONSIBLE TO REPAIR SUBSTRUCTURES DAMAGED DURING CONSTRUCTION AT NO ADDITIONAL COST TO THE DEPARTMENT IF THE DAMAGED SUBSTRUCTURE IS SHOWN ON THESE DRAWINGS OR REFERENCE DRAWINGS.
30. CONTRACTOR SHALL PROVIDE ADEQUATE PUMPING AND DRAINAGE FACILITIES TO KEEP EXCAVATED AREA SUFFICIENTLY DRY FROM GROUNDWATER AND/OR RUNOFF SO AS NOT TO ADVERSELY AFFECT CONSTRUCTION PROCEDURES OR CAUSE EXCESSIVE DISTURBANCE OF UNDERLYING NATURAL GROUND, FOOTING SUBGRADE, AND SLAB SUBGRADE.
31. ANY CATCH BASINS THAT RECEIVE RUNOFF FROM THE PROJECT WORK SHALL BE PROTECTED AND CLEANED, AS NECESSARY.
32. A REGISTERED DEPUTY GRADING INSPECTOR IS REQUIRED ON GRADING AND FOUNDATION EARTHWORK WHERE FOUNDATION EXCAVATION BELOW A 1:1 PLANE FROM PROPERTY LINE AND PROJECTS INVOLVE UNUSUAL HAZARDS.
33. A REGISTERED DEPUTY GRADING INSPECTOR IS REQUIRED ON SHORING WORK INCLUDING SLOT-CUTS.
34. NO FILL TO BE PLACED UNTIL THE CITY GRADING INSPECTOR HAS INSPECTED AND APPROVED THE BOTTOM EXCAVATION.
35. FILL SHALL BE COMPACTED PER THE REQUIREMENTS STATED IN THE GEOTECHNICAL REPORT AND THE SPECIFICATIONS. ENGINEER SHALL BE NOTIFIED OF ANY DISCREPANCIES BETWEEN THE PLANS, THE GEOTECHNICAL REPORT, AND THE SPECIFICATIONS PRIOR TO BEGINNING WORK.

NO.	DATE	DRAWN	REVISIONS -	CHK'D	APP'D
A	3/20/25	-	30% CONCEPTUAL DESIGN		
B	4/25/25	-	FINAL CONCEPTUAL DESIGN		
C	7/18/25	-	40% DESIGN		
D	9/19/25	-	80% DESIGN		

NOT FOR CONSTRUCTION

NO.	DATE	DRAWN	REVISIONS -	CHK'D	APP'D
			80% DESIGN REVIEW SEP 19 , 2025		

Jacobs
2600 MICHELSON DRIVE, SUITE 500
IRVINE, CA 92612
T: (949) 224-7500
F: (949) 224-7501

REGISTERED PROFESSIONAL ENGINEER
MICHAEL S. MCAMIS
No. 60573
CIVIL
STATE OF CALIFORNIA

SCALE: NONE
DRAWN: E. FLORES
CHECKED: G. NGUYEN
DESIGNED: S. MCAMIS
ENGINEER / ARCHITECT

TERMINAL ISLAND MARITIME SUPPORT FACILITY

GENERAL NOTES

THE PORT OF LOS ANGELES
ENGINEERING DIVISION
425 S. PALOS VERDES STREET SAN PEDRO CA 90731-3309

DRAWING NUMBER 1-3513

SHEET NUMBER GN-01

POLAPRDY_042023_BW2

A	@	AT
	AB	ANCHOR BOLT
	ABAND	ABANDON
	AC	ACRE, ASPHALT CONCRETE
	AHJ	AUTHORITY HAVING JURISDICTION
	AL	ALUMINUM
	ALT	ALTERNATE, ALTERNATIVE, ALTERNATING
	AMP	ALTERNATIVE MARITIME POWER
	APPD	APPROVED
	APPROX	APPROXIMATE, APPROXIMATELY
	ASSY	ASSEMBLY
	ASTM	AMERICAN SOCIETY FOR TESTING AND MATERIALS
	AVE	AVENUE
	AVG	AVERAGE
B	BC	BEGINNING OF CURVE, BETWEEN CENTERS
	BCR	BEGINNING OF CURVE RETURN
	BD	BOARD
	BET	BETWEEN
	BEG	BEGINNING
	BF	BACKFLOW
	BKHD	BULKHEAD
	BLDG	BUILDING
	BM	BEAM
	BOT	BOTTOM
	BVC	BEGINNING OF VERTICAL CURVE
	BVCE	BEGINNING OF VERTICAL CURVE ELEVATION
	BVCS	BEGINNING OF VERTICAL CURVE STATION
C	C	CONDUIT
	CAB	CRUSH AGGREGATE BASE
	CB	CATCH BASIN
	CD	CALENDAR DAYS
	CFS	CONTAINER FREIGHT STATION
	CI	CAST IRON
	CJ	CONSTRUCTION JOINT
	CLR	CLEAR, CLEARANCE
	CMB	CRUSHED MISCELLANEOUS BASE
	CO	CLEANOUT
	COL	COLUMN
	CONC	CONCRETE
	CONN	CONNECTION
	CONST	CONSTRUCTION
	CONT	CONTINUE, CONTINUOUS
	COTG	CLEANOUT TO GRADE
	CT	CONTAINER TERMINAL, CALTRANS
	CU FT	CUBIC FEET
	℄	CENTER LINE
	CW	CONTAINER WHARF
D	∆	DEFLECTION ANGLE
	D	DEGREE OF CURVATURE
	DEG	DEGREE
	DEPT	DEPARTMENT
	DEMO	DEMOLISH
	DET	DETAIL
	DIA	DIAMETER
	DIAG	DIAGONAL
	DIM	DIMENSION
	DISC	DISCONNECT
	DWP	DEPARTMENT OF WATER AND POWER
	DWPPS	DEPARTMENT OF WATER AND POWER, POWER SYSTEMS
	DWPWS	DEPARTMENT OF WATER AND POWER, WATER SYSTEMS
	DWG	DRAWING
E	E	EAST
	EA	EACH
	EC	END OF CURVE
	ECD	ELECTRICAL CONDUIT DUCT
	ECR	END OF CURVE RETURN
	EG	EXISTING GRADE
	EHT	EXTREMELY HIGH TIDE
	EL OR ELEV	ELEVATION
	ELEC	ELECTRICAL
	ELT	EXTREMELY LOW TIDE
	ELB	ELBOW
	EMH	ELECTRICAL MAINTENANCE HOLE
	ENCSD	ENCASED
	ENGR	ENGINEER
	EP	EDGE OF PAVEMENT
	EQ	EQUAL
	EQUIP	EQUIPMENT
	EST	ESTIMATE
	EV	ELECTRICAL VAULT
	EVC	END OF VERTICAL CURVE
	EX, EXIST	EXISTING
	EXP JT	EXPANSION JOINT
F	FA	FIRE ALARM
	FDN	FOUNDATION
	FF	FINISHED FLOOR
	FG	FINISHED GRADE
	FH	FIRE HYDRANT
	FIG	FIGURE
	FL	FLOOR
	FLEX	FLEXIBLE
	FLG	FLANGE
	FLL	FLOW LINE
	FM	FORCE MAIN
	FP	FULL PENETRATION GROOVE WELD
	FS	FINISHED SURFACE
	FT	FEET, FOOT
	FTG	FOOTING
G	G	GAS
	GA	GAUGE
	GAL	GALLON
	GALV	GALVANIZED
	GB	GRADE BREAK
	GD	GUARD
	GL	GROUND LINE
	GND	GROUND
	GR	GRADE
	GVL	GRAVEL
	GWB	GYPSUM WALLBOARD
H	HDPE	HIGH DESNSITY POLYETHYLENE
	HORIZ	HORIZONTAL
	HMLP	HIGH MAST LIGHT POLE
	HP	HIGH POINT
	HS	HIGH STRENGTH
	HT	HEIGHT
	HV	HOSE VALVE
I	ID	INSIDE DIAMETER
	IF	INSIDE FACE
	IN	INCH
	INFIL	INFILTRATION
	INSUL	INSULATE
	INV	INVERT
	IP	INDICATOR PILE
J	JB	JUNCTION BOX
	JPCP	JOINTED PLAIN CONCRETE PAVEMENT
	JS	JUNCTION STRUCTURES
	JT	JOINT
K	KSI	KIPS PER SQUARE INCH
	KV	KILOVOLTS
	KV-A	KILOVOLT-AMPERE
L	L	LENGTH, STRUCTURAL STEEL ANGLE
	LA	LOS ANGELES
	LADOT	LOS ANGELES DEPARTMENT OF TRANSPORTATION
	LAHD	LOS ANGELES HARBOR DEPARTMENT
	LAXT	LOS ANGELES EXPORT TERMINAL
	LB/FT	POUNDS PER FOOT
	LOA	LENGTH OVERALL
	LB	POUND
	LF	LINEAR FEET
	LG	LONG
	LONG	LONGITUDINAL
	LP	LOW POINT
	LS	LANDSIDE
	LT	LEFT
M	MAINT	MAINTENANCE
	MATL	MATERIAL
	MAX	MAXIMUM
	MECH	MECHANICAL
	MFG	MANUFACTURER OF FEATURE (WATER DIST. SYSTEM)
	MFR	MANUFACTURER
	MH	MAINTENANCE HOLE
	MHW	MEAN HIGH WATER
	MIN	MINIMUM
	MID	MIDDLE
	MISC	MISCELLANEOUS
	MJ	MECHANICAL JOINT
	ML	MUD LINE
	MLLW	MEAN LOWER LOW WATER
	MLW	MEAN LOW WATER
	MOD	MODIFICATION
	MPH	MILE PER HOUR
	MSL	MEAN SEA LEVEL
	MTD	MOUNTED
	MTL	MATERIAL
N	N	NORTH
	NGVD	NATIONAL GEODETIC VERTICAL DATUM
	NIC	NOT IN CONTRACT
	NO	NUMBER
	NOM	NOMINAL
	NTP	NOTICE TO PROCEED
	NTS	NOT TO SCALE
	N/A	NOT APPLICABLE
O	OC	ON CENTER
	OD	OUTSIDE DIAMETER
	OF	
	OG	ORIGINAL GROUND
	OPNG	OPENING
	OPP	OPPOSITE
	ORIG	ORIGINAL
P	P	POLE, PIPE
	PB	PULL BOX
	P/C	PRECAST
	P/S	PRESTRESS, PRESTRESSING
	PC	POINT OF CURVE
	PH	PHASE, POTHOLE
	PHL	PIERHEAD LINE
	PI ℄	POINT OF INTERSECTION
	PL,	PLATE (STEEL), PROPERTY LINE
	PMB	PERMEABLE MATERIAL BASE
	POLA	PORT OF LOS ANGELES
	PP	POWER POLE
	PSI	POUNDS PER SQUARE INCH
	PT	POINT OF TANGENCY
	PVC	POLYVINYL CHLORIDE
	PVMT	PAVEMENT
	PWR	POWER
R	R	RADIUS
	RCB	REINFORCED CONCRETE BOX
	RCP	REINFORCED CONCRETE PIPE
	RD	ROAD
	RDWY	ROADWAY
	RED.	REDUCING
	REF	REFERENCE
	REINF	REINFORCE, REINFORCED, REINFORCEMENT
	REQD	REQUIRED
	RP	REDUCED PRESSURE
	RR	RAILROAD
	RS	
	R/W	RIGHT OF WAY
S	S	SLOPE, SOUTH
	SCH	SCHEDULE
	SD	STORM DRAIN
	SDMH	STORM DRAIN MAINTENANCE HOLE
	SECT	SECTION
	SEP	SEPARATION
	SHT(S)	SHEET(S)
	SMH	SEWER MAINTENANCE HOLE
	SIM	SIMILAR
	SPA	SPACING, SPACED
	SPLY	SUPPLY
	SQ	SQUARE
	SQ FT	SQUARE FOOT/FEET
	SQ IN	SQUARE INCH
	SS	SANITARY SEWER, STAINLESS STEEL
	ST	STREET
	ST LT	STREET LIGHT
	STA	STATION
	STD	STANDARD
	STIFF	STIFFEN, STIFFENER
	STL	STEEL
	STRUCT	STRUCTURAL, STRUCTURE
	SUBSTA	SUBSTATION
	SW	SWITCH
	SWBD	SWITCHBOARD
	SWGR	SWITCHGEAR
	SYM	SYMMETRICAL, SYMBOL
T	T	TANGENT DISTANCE
	TC	TOP OF CURB
	TCB	TOP OF CATCH BASIN
	TEL	TELEPHONE
	TEMP	TEMPORARY
	TERM	TERMINAL
	TEU	TWENTY FOOT EQUIVALENT UNITS
	THK	THICK(NESS)
	TIGS	TERMINAL ISLAND GRADE SEPARATION
	TIMSF	TERMINAL ISLAND MARITIME SUPPORT FACILITY
	TOC	TOP OF CONCRETE
	TOD	TOP OF DECK
	TOG	TOP OF GRATE
	TOW	TOP OF WALL
	TOR	TOP OF RAIL
	TRK	TRACK
	TYP	TYPICAL
U	UG	UNDER GROUND
	UNO	UNLESS NOTED OTHERWISE
	UP	UNION PACIFIC
	USGS	UNITED STATES GEODETIC SURVEY
	USPHL	UNITED STATES PIERHEAD LINE
V	V	VOLTS
	VA	VOLT-AMPERE
	VC	VERTICAL CURVE
	VCP	VITRIFIED CLAY PIPE
	VERT	VERTICAL
W	W	WATER, WEST
	W/	WITH
	W/O	WITHOUT
	WHB	WELDED HEADED REINF. BARS
	WS	WATERSIDE
	WT	WEIGHT
	WWF	WELDED WIRE FABRIC
Y	YD	YARD

NO.	DATE	DRAWN	REVISIONS -	CHK'D	APP'D
A	3/20/25	-	30% CONCEPTUAL DESIGN		
B	4/25/25	-	FINAL CONCEPTUAL DESIGN		
C	7/18/25	-	40% DESIGN		
D	9/19/25	-	80% DESIGN		

NOT FOR CONSTRUCTION

NO.	DATE	DRAWN	REVISIONS -	CHK'D	APP'D
			80% DESIGN REVIEW SEP 19 , 2025		

Jacobs
2600 MICHELSON DRIVE, SUITE 600
IRVINE, CA 92612
T: (949) 224-7500
F: (949) 224-7501

REGISTERED PROFESSIONAL ENGINEER
MICHAEL S. McAMIS
No. 60573
CIV IL
STATE OF CALIFORNIA

SCALE: NONE
DRAWN: E. FLORES
CHECKED: G. NGUYEN
DESIGNED: S. MCAMIS
ENGINEER / ARCHITECT

TERMINAL ISLAND MARITIME SUPPORT FACILITY

ABBREVIATIONS

THE PORT OF LOS ANGELES
ENGINEERING DIVISION
425 S. PALOS VERDES STREET SAN PEDRO CA 90731-3309

DRAWING NUMBER 1-3513
SHEET NUMBER GN-03

POLAPRD1_042023_BWD

LEGEND AND SYMBOLS:

SYMBOL LEGEND

- AIR MAINTENANCE HOLE
- ANODIC PROTECTION
- BOLLARD
- CAMERA
- CATHODIC PROTECTION
- CITRUS TREE
- CLEAN OUT
- CLEAT
- CONCRETE PILE
- CONTROL POINT
- DERAIL
- DECORATIVE LIGHT
- ELECTRICAL MAINTENANCE HOLE
- ELECTRICAL PANEL
- FENDER
- FIRE CONNECTION
- FIRE HYDRANT
- FIRE MAINTENANCE HOLE
- FLAG POLE
- GAS METER
- GAS VALVE
- GROUND LIGHT
- GROUND ROD
- GUARD POLE
- GUY WIRE
- GUY POLE
- HANDICAP SIGN
- HIGH MAST POLE
- IRRIGATION CONTROL VALVE
- LAMP HOLE
- LIGHT POLE
- MAINTENANCE HOLE
- MONITORING WELL
- OAK TREE
- PALM TREE
- PEPPER TREE
- PETROLEUM MAINTENANCE HOLE
- PETROLEUM VALVE
- PINE TREE
- POWER POLE
- PULLBOX
- RAILROAD CROSSING ARM
- RAILROAD SIGN
- RAILROAD SWITCH
- RED CAR OVERHEAD CABLE SYSTEM
- SEWER MAINTENANCE HOLE
- SIGN
- STORM DRAIN MAINTENANCE HOLE
- STOWPIN
- TELEPHONE MAINTENANCE HOLE
- TRAFFIC SIGNAL
- TREE
- VALVE
- VENT
- WATER MAINTENANCE HOLE
- WATER METER
- WATER SHUTOFF
- WATER VALVE
- WOOD/TIMBER PILE

POLA ANNOTATIONS

POLA STD CALLOUT: TAIL ONLY

POLA STD CALLOUT: SINGLE REFERENCE

0X-00

POLA STD CALLOUT: SINGLE REFERENCE HEAD ONLY

0X-00

POLA STD CALLOUT: DETAIL REFERENCE + SHEET REFERENCE

0X-0.0
0X-0.0

POLA STD CALLOUT: VIEW TITLE

XX-XX
0X-00
0X-00

DETAIL TITLE
DETAIL TITLE
SCALE: SELECT SCALE VIA DROPDOWN

POLA STD CALLOUT: NORTH ARROW

N

REVISION DELTA SYMBOL

A

GRAPHIC SCALE BLOCK

10' 0'-0" 10' 20'

SCALE: 1" = 10'

MULTILEADERS: ARROW, INTEGRAL, AND CIRCLE ARROWHEADS

- MULTILEADER PLACEHOLDER
- MULTILEADER PLACEHOLDER
- MULTILEADER PLACEHOLDER
- MULTILEADER PLACEHOLDER

LEGEND OF CONSTRUCTION NOTES

- COORDINATE
- CONSTRUCT
- EXISTING
- REMOVE
- NOT IN CONTRACT
- REMODEL EXISTING
- REMOVE AND CONSTRUCT
- RELOCATE
- ABANDON

SUBSTRUCTURE LINETYPE STANDARDS

ACTIVE - ELECTRICAL COND	E
ABANDONED - ELECTRICAL COND	ABAND E
ACTIVE - FIBER OPTIC CABLE	FOC
ABANDONED - FIBER OPTIC CABLE	ABAND FOC
ACTIVE - GAS LINE	GAS
ABANDONED - GAS LINE	ABAND GAS
ACTIVE - OIL LINE	OIL
ABANDONED - OIL LINE	ABAND OIL
ACTIVE - SEWER LINE	SS
ABANDONED - SEWER LINE	ABAND SS
ACTIVE - STORM DRAIN LINE	SD
ABANDONED - STORM DRAIN LINE	ABAND SD
ACTIVE - TELEPHONE LINE	TELE
ABANDONED - TELEPHONE LINE	ABAND TELE
ACTIVE - WATER LINE	W
ABANDONED - WATER LINE	ABAND W
REMOVED - WATER LINE	REM W
ACTIVE - WATER (FIRE) LINE	FW
ABANDONED - WATER (FIRE) LINE	ABAND FW
REMOVED - WATER (FIRE) LINE	REM FW
ACTIVE - WATER (DWP) LINE	DWP WS
ABANDONED - WATER (DWP) LINE	ABAND DWP WS
REMOVED - WATER (DWP) LINE	REM DWP WS
PROJECT LIMITS	
U.S. PIERHEAD LINE	
FENCE LINE	X X X

CONSTRUCTION KEYNOTES BLOCKS & MULTILEADERS

MULTI LEADER	BLOCK	DESCRIPTION
##	##	CONSTRUCT
##	##	EXISTING/PROTECT-IN-PLACE
##	##	REMOVE
##	##	NOT IN CONTRACT (NIC)
## ##	## ##	REMODEL EXIST.
## ##	## ##	REMOVE & CONST.
##	##	RELOCATE
##	##	ABANDON
##	##	COORDINATE
##	##	OCTAGON (UNASSIGNED)

LINE COLOR LEGEND

ELECTRIC	E E E
FIBER OPTIC	FO FO FO
GAS	GAS GAS
IRRIGATION	I I I
PETROLEUM	P P P
SEWER	SS SS SS
SLURRY	
STORM DRAIN	SD SD SD
TELEPHONE	TELE TELE
TRENCH	
UNKNOWN	
WATER	W W W

LINETYPE LEGEND

- AC GRADE CHANGE (AGGC)
- ASPHALT CURB (ACTC)
- ASPHALT BERM (BRM)
- BACK OF WALK (BW)
- BALLAST GRADE CHANGE (BGC)
- BULLRAIL
- CONCRETE GRADE CHANGE (CGC)
- DIRT GRADE CHANGE (DGC)
- EDGE OF BALLAST (EBL)
- EDGE OF CONCRETE (EOC)
- EDGE OF CMB (ECMB)
- EDGE OF DIRT (EOD)
- EDGE OF ROCK (EOR)
- EDGE OF STEEL (EOS)
- EDGE OF WOOD (EOW)
- EDGE OF PAVEMENT (EP)
- FLOWLINE (FL)
- CHAIN LINK FENCE (CLF) X X X
- GUTTER OUT (GO)
- GUARD RAIL (GR)
- K-RAIL (KRL) KR KR
- MAJOR CONTOUR INTERVAL
- MINOR CONTOUR INTERVAL
- RAIL / CRANE RAIL (RL / CRL)
- RAILROAD WORKING LINE (RWL)
- ROCK GRADE CHANGE (RGC)
- STRIPING (STR)
- TOP OF CURB (TC)
- WALL BOTTOM (WB)
- WOOD FENCE (WDF)
- WHARF FACE (WF)
- WROUGHT IRON FENCE (WIF)
- WALL TOP (WT)

NO.	DATE	DRAWN	REVISIONS -	CHK'D	APP'D
A	3/20/25	-	30% CONCEPTUAL DESIGN		
B	4/25/25	-	FINAL CONCEPTUAL DESIGN		
C	7/18/25	-	40% DESIGN		
D	9/19/25	-	80% DESIGN		

NOT FOR CONSTRUCTION

NO.	DATE	DRAWN	REVISIONS -	CHK'D	APP'D
			80% DESIGN REVIEW SEP 19 , 2025		

Jacobs
2600 MICHELSON DRIVE, SUITE 500
IRVINE, CA 92612
T: (949) 224-7500
F: (949) 224-7501

REGISTERED PROFESSIONAL ENGINEER — MICHAEL S. McAMIS — No. 60573 — CIVIL — STATE OF CALIFORNIA

SCALE: NONE
DRAWN: E. FLORES
CHECKED: G. NGUYEN
DESIGNED: S. MCAMIS
ENGINEER / ARCHITECT

TERMINAL ISLAND MARITIME SUPPORT FACILITY

LEGENDS AND SYMBOLS

THE PORT OF LOS ANGELES
ENGINEERING DIVISION
425 S. PALOS VERDES STREET SAN PEDRO CA 90731-3309

DRAWING NUMBER 1-3513

SHEET NUMBER GN-04

POLAPRO1_040223_BWD



1CC-01
CC-01

HORIZONTAL COORDINATE CONTROL MAP

SCALE: 1" = 200'

N

LEGEND:

△ CONTROL POINT

NOTES:

1. ALL COORDINATES ARE BASED ON THE NORTH AMERICAN DATUM OF 1983 (NAD 83), CALIFORNIA COORDINATE SYSTEM, ZONE 5, U.S. FEET 1991.35 EPOCH.
2. ALL ELEVATIONS ARE BASED ON THE NATIONAL GEODETIC VERTICAL DATUM OF 1929 (NGVD 29), MEAN LOWER LOW WATER (MLLW), USC&GS BM #DY 1083 941 0660 TIDAL 8 EL=13.929.
3. CONTACT POLA SURVEY FOR DRAWINGS R5337_C AND E5249_A FOR ADDITIONAL INFORMATION.

CONTROL: POLA BASE NET 2010 (1991.35 EPOCH)
HORIZ: NAD83 CA ZONE 5
VERT: MLLW (BASED ON NGVD29 DATUM)
BM: TIDAL 8 EL 13.929'

POINT TABLE

NAME	NORTHING	EASTING	ELEVATION	DESCRIPTION
BARK	1729915.00	6482177.90	12.74	SET SPK IN N CRB PILCHARD ST 8' W/O BCR & 75' W/O C/L FERRY ST
CUSTOM	1730852.42	6481824.30	13.84	SET SPK & WSHR IN ISLAND NOSE C/L FERRY ST & 62' N/O N SIDE U.S. CUSTOM BLDG
EAGLE	1730480.99	6482042.66	13.69	FND SPK IN E CRB FERRY ST & SOUTH SIDE PROD U.S. CUSTOM BLD
LITE	1729244.74	6482419.44	11.16	SET SPK IN N CRB TERMINAL WAY & 114' W/O W CRB FERRY ST
RED	1730026.03	6484413.95	15.39	FND SPK IN CNC CRB 0.5' N/O CB & 431' SW/O CP "YES"
SHALLOW	1730902.45	6484829.71	16.94	FND PNCHD POLA DISC IN SE COR CB S/S TERMINAL WAY & 1600' W/O NAVY WAY
STIFF	1729968.30	6482288.47	12.61	SET SPK & WSHR IN E CRB FERRY ST & 21' N/O C/L PILCHARD ST
TURLING	1729117.84	6482716.42	9.41	SET SPK IN N CB 58' E/O C/L TERMINAL WAY & 323' E/O CP 'LITE'
VILLA	1729756.69	6482389.68	12.11	SET SPK & WSHR IN E CRB FERRY ST & OPPC/L ENTRANCE DPW SANITATION
YES	1730415.89	6484598.72	18.59	SET SPK & WSHR IN E AC WALK TERMINAL WAS & 540' S/O CP "SHALLOW"

NOTE: COORDINATES LISTED ARE GRID. FOR GROUND DISTANCES, USE SCALE FACTOR OF 1.00008

200' 0' 200' 400'

SCALE: 1" = 200'

NO.	DATE	DRAWN	REVISIONS -	CHK'D	APP'D
C	7/18/25	-	40% DESIGN		
D	9/19/25	-	80% DESIGN		

NOT FOR CONSTRUCTION

NO.	DATE	DRAWN	REVISIONS -	CHK'D	APP'D
			80% DESIGN REVIEW SEP 19 , 2025		

Jacobs
3600 MICHELSON DRIVE, SUITE 600
IRVINE, CA 92612
T: (949) 224-7500
F: (949) 224-7501

REGISTERED PROFESSIONAL ENGINEER
MICHAEL S. MCAMIS
No. 60573
CIVIL
STATE OF CALIFORNIA

SCALE: 1"=200'
DRAWN: E. FLORES
CHECKED: G. NGUYEN
DESIGNED: S. MCAMIS
ENGINEER / ARCHITECT

TERMINAL ISLAND MARITIME SUPPORT FACILITY

HORIZONTAL COORDINATE CONTROL MAP

THE PORT OF LOS ANGELES
ENGINEERING DIVISION
425 S. PALOS VERDES STREET SAN PEDRO CA 90731-3309

DRAWING NUMBER: 1-3513
SHEET NUMBER: CC-01

POLAPRD1_04/2023_BWD

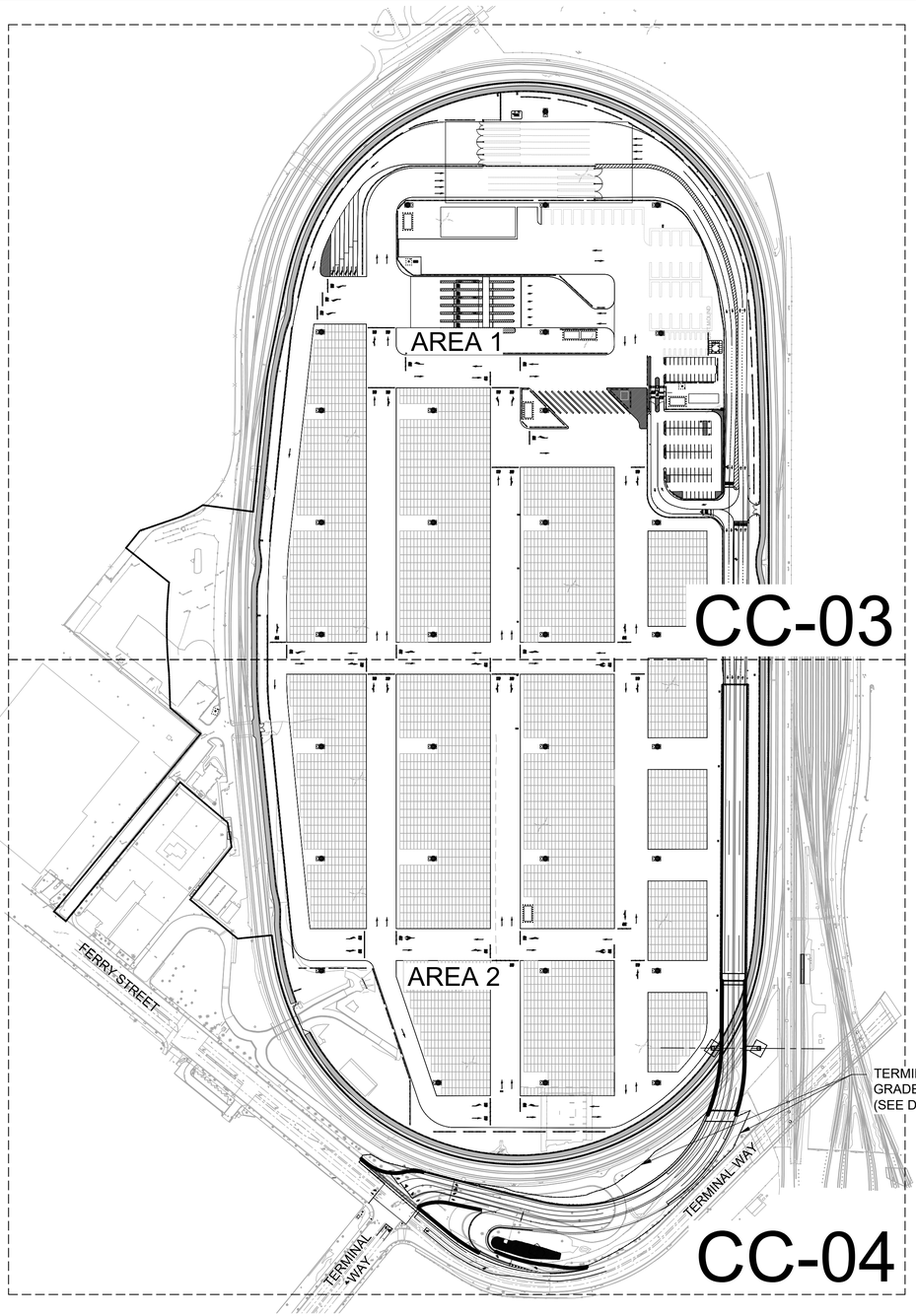

1CC-02
CC-02
SITE PLAN - OVERALL
SCALE: 1" = 200'

N

POINT TABLE		
POINT	NORTHING	EASTING
1	1731857.32	6484175.21
2	1731707.78	6483411.21
3	1731654.80	6483367.03
4	1731584.85	6483314.12
5	1731452.53	6483215.40
6	1731420.72	6483194.17
7	1731131.69	6483019.76
8	1731205.43	6482905.65
9	1731202.17	6482842.46
10	1731215.40	6482723.67
11	1731189.65	6482670.64
12	1731056.84	6482735.49
13	1730838.95	6482632.04
14	1730751.79	6482594.54
15	1730654.64	6482638.75
16	1730391.85	6482080.00
17	1730354.88	6482097.75
18	1730560.58	6482533.22
19	1730408.36	6482602.21
20	1730344.71	6482583.97
21	1730264.98	6482423.36
22	1730116.12	6482493.73
23	1730085.19	6482580.40
24	1730026.02	6482561.84
25	1729906.13	6482539.15
26	1729227.69	6482965.03
27	1729460.65	6483616.69
28	1729432.97	6483674.39
29	1729462.57	6483730.61
30	1729500.96	6483756.07
31	1729591.48	6483806.40
32	1729680.58	6483853.01
33	1729758.76	6483892.57
34	1729848.18	6483937.01
35	1729931.50	6483977.10
36	1730027.76	6484024.02
37	1730175.87	6483959.78
38	1730148.19	6484017.49
39	1730430.79	6484215.32
40	1730609.77	6484300.25
41	1730759.07	6484369.58
42	1730835.82	6484403.25
43	1730929.14	6484443.24
44	1731016.15	6484479.69
45	1731098.41	6484508.83
46	1731161.24	6484524.01

200' 0' 200' 400'

SCALE: 1" = 200'

NO.	DATE	DRAWN	REVISIONS -	CHK'D	APP'D
C	7/18/25	-	40% DESIGN		
D	9/19/25	-	80% DESIGN		

NOT FOR CONSTRUCTION

NO.	DATE	DRAWN	REVISIONS -	CHK'D	APP'D

80% DESIGN REVIEW
SEP 19 , 2025

Jacobs
2600 MICHELSON DRIVE, SUITE 500
IRVINE, CA 92612
T: (949) 224-7500
F: (949) 224-7501

REGISTERED PROFESSIONAL ENGINEER
MICHAEL S. McAMIS
No. 60573
CIVIL
STATE OF CALIFORNIA

SCALE: 1"=200'
DRAWN: E. FLORES
CHECKED: G. NGUYEN
DESIGNED: S. MCAMIS
ENGINEER / ARCHITECT

TERMINAL ISLAND MARITIME SUPPORT FACILITY

SITE PLAN - OVERALL

THE PORT OF LOS ANGELES
ENGINEERING DIVISION
425 S. PALOS VERDES STREET SAN PEDRO CA 90731-3309

DRAWING NUMBER: 1-3513
SHEET NUMBER: CC-02

POLAPRDT_040320_BWD

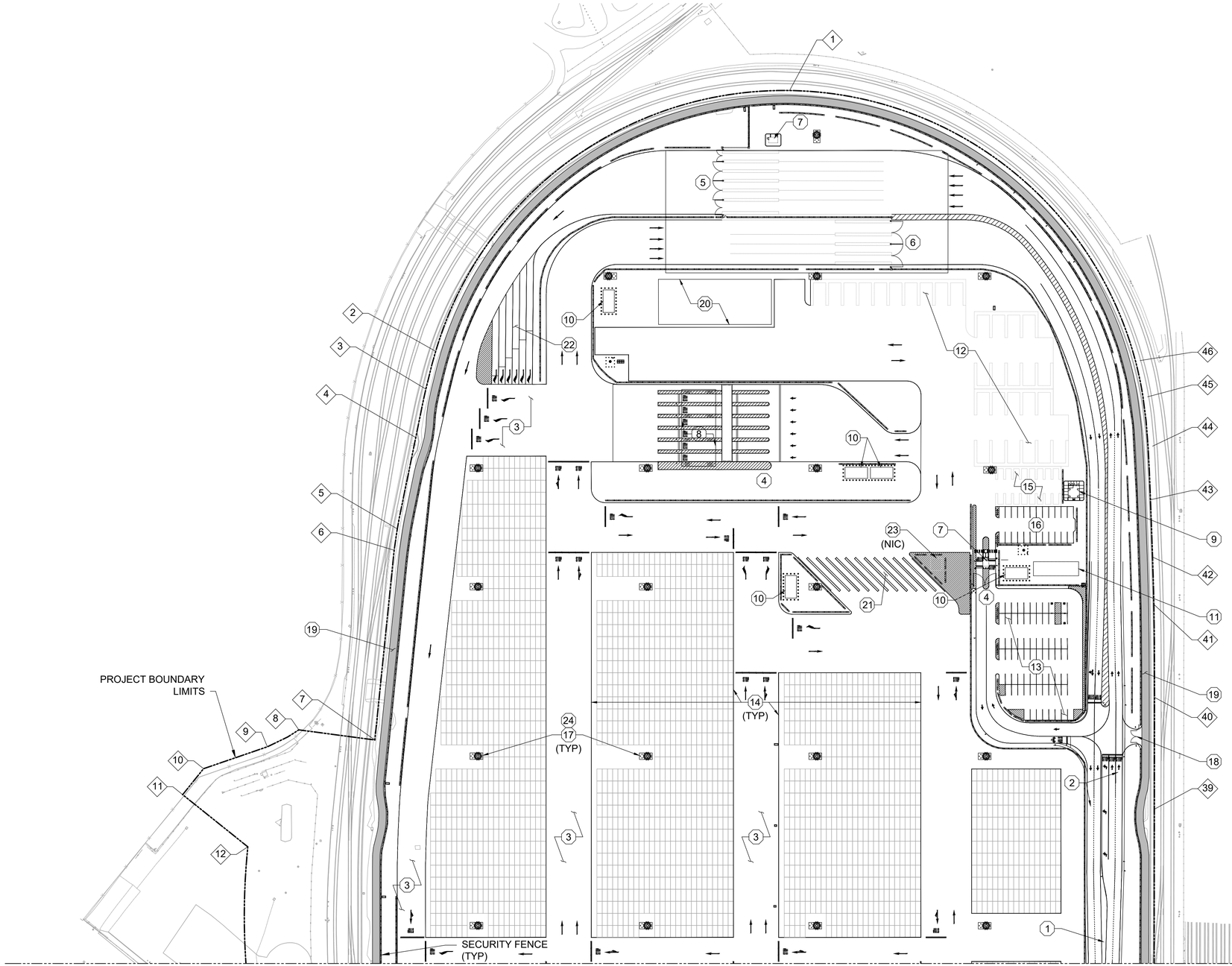

1CC-03 / CC-03 SITE PLAN - AREA 1

SCALE: 1" = 100'

N

KEY NOTES:

1. TERMINAL ISLAND GRADE SEPARATION PROJECT (1-3497) TOUCH DOWN
2. FOUR LANE, TWO-WAY TRAFFIC ROADWAY
3. ONE-WAY TRAFFIC ROADWAY
4. SECONDARY ACCESS GATE
5. IN-GATE (NIC)
6. OUT GATE (NIC)
7. GUARD BOOTH
8. ROADABILITY CANOPY
9. RESTROOM BUILDING
10. LOCAL SUBSTATION
11. OFFICE / WELFARE BUILDING (NIC)
12. MT HANDLER / FORKLIFT PARKING/ EV CHARGING (NIC)
13. POV PARKING
14. GROUNDED EMPTY CONTAINER STACKS (NIC)
15. UTILITY TRACTOR PARKING/ EV CHARGING (NIC)
16. TERMINAL VEHICLE PARKING
17. HIGH MAST POLE
18. EMERGENCY / PHL ACCESS GATES
19. EMERGENCY / PHL ACCESS ROAD
20. MAINTENANCE CANOPY (NIC)
21. TRUCK PARKING
22. TROUBLE PARKING
23. OVER THE ROAD TRUCK RESTROOM (NIC)
24. FIRE HYDRANT

LEGEND:

◇ COORDINATE POINT

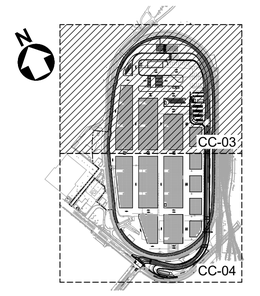

KEY MAP

100' 0' 100' 200'

SCALE: 1" = 100'

NO.	DATE	DRAWN	REVISIONS -	CHK'D	APP'D
C	7/18/25	-	40% DESIGN		
D	9/19/25	-	80% DESIGN		

NOT FOR CONSTRUCTION

NO.	DATE	DRAWN	REVISIONS -	CHK'D	APP'D

80% DESIGN REVIEW SEP 19 , 2025

Jacobs
2900 MICHELSON DRIVE, SUITE 500
IRVINE, CA 92612
T: (949) 224-7500
F: (949) 224-7501

REGISTERED PROFESSIONAL ENGINEER — MICHAEL S. MCAMIS — No. 60573 — CIVIL — STATE OF CALIFORNIA

SCALE:	1"=100'
DRAWN:	E. FLORES
CHECKED:	G. NGUYEN
DESIGNED:	S. MCAMIS

ENGINEER / ARCHITECT

TERMINAL ISLAND MARITIME SUPPORT FACILITY

SITE PLAN - AREA 1

THE PORT OF LOS ANGELES
ENGINEERING DIVISION
425 S. PALOS VERDES STREET SAN PEDRO CA 90731-3309

DRAWING NUMBER: 1-3513

SHEET NUMBER: CC-03

POLAPRDT_04/2023_BWD

MATCHLINE, SEE DRAWING CC-03 FOR CONTINUATION

PROJECT BOUNDARY LIMITS

SECURITY FENCE (TYP)

FERRY STREET

TERMINAL WAY

TERMINAL WAY

TERMINAL ISLAND GRADE SEPARATION (NIC) (SEE DRAWING 1-3497)

14 (TYP)

24 17 (TYP)

KEY NOTES:

1. TERMINAL ISLAND GRADE SEPARATION PROJECT (1-3497) TOUCH DOWN
2. FOUR LANE, TWO-WAY TRAFFIC ROADWAY
3. ONE-WAY TRAFFIC ROADWAY
4. SECONDARY ACCESS GATE
5. IN-GATE (NIC)
6. OUT GATE (NIC)
7. GUARD BOOTH
8. ROADABILITY CANOPY
9. RESTROOM BUILDING
10. LOCAL SUBSTATION
11. OFFICE / WELFARE BUILDING (NIC)
12. MT HANDLER / FORKLIFT PARKING/ EV CHARGING (NIC)
13. POV PARKING
14. GROUNDED EMPTY CONTAINER STACKS (NIC)
15. UTILITY TRACTOR PARKING/ EV CHARGING (NIC)
16. TERMINAL VEHICLE PARKING
17. HIGH MAST POLE
18. EMERGENCY / PHL ACCESS GATES
19. EMERGENCY / PHL ACCESS ROAD
20. MAINTENANCE CANOPY (NIC)
21. TRUCK PARKING
22. TROUBLE PARKING
23. OVER THE ROAD TRUCK RESTROOM (NIC)
24. FIRE HYDRANT

LEGEND:

◇ COORDINATE POINT

1CC-04 / CC-04 SITE PLAN - AREA 2
SCALE: 1" = 100'

N

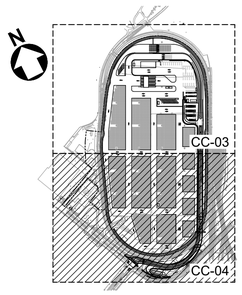

KEY MAP

100' 0' 100' 200'
SCALE: 1" = 100'

NO.	DATE	DRAWN	REVISIONS -	CHK'D	APP'D
C	7/18/25	-	40% DESIGN		
D	9/19/25	-	80% DESIGN		

NOT FOR CONSTRUCTION

NO.	DATE	DRAWN	REVISIONS -	CHK'D	APP'D

80% DESIGN REVIEW
SEP 19 , 2025

Jacobs
2600 MICHELSON DRIVE, SUITE 600
IRVINE, CA 92612
T: (949) 224-7500
F: (949) 224-7501

REGISTERED PROFESSIONAL ENGINEER
MICHAEL S. McAMIS
No. 60573
CIVIL
STATE OF CALIFORNIA

SCALE: 1"=100'
DRAWN: E. FLORES
CHECKED: G. NGUYEN
DESIGNED: S. MCAMIS
ENGINEER / ARCHITECT

TERMINAL ISLAND MARITIME SUPPORT FACILITY

SITE PLAN - AREA 2

THE PORT OF LOS ANGELES
ENGINEERING DIVISION
425 S. PALOS VERDES STREET SAN PEDRO CA 90731-3309

DRAWING NUMBER 1-3513
SHEET NUMBER CC-04

POLAPRD1_042023_BWD

PHASING NOTES:

1. MAINTAIN ROADWAY TRAFFIC ON PUBLIC STREETS AROUND PROJECT SITE, PARTICULARLY FERRY STREET AND TERMINAL WAY. DEBRIS SHALL BE REMOVED AND ANY DAMAGE CAUSED BY CONSTRUCTION ACTIVITIES SHALL BE REPAIRED IMMEDIATELY.
2. CONSTRUCTION WILL BE OCCURRING ON PROJECTS IDENTIFIED HEREON DURING THE DURATION OF THIS CONTRACT. COORDINATE WORK WITH ADJACENT CONTRACTS AND PLAN WORK ACCORDINGLY.
3. FOR TIMSF ACCESS FROM SR-47 TAKE FERRY STREET EXIT. PROCEED SOUTH BOUND AND MAKE LEFT TO ENTER ELDRIDGE STREET.
4. COORDINATE WITH LADWP FOR WORK ASSOCIATED WITH UTILITIES AND STRUCTURES OWNED BY LADWP THIRTY (30) DAYS PRIOR TO THE START OF WORK. COORDINATE WITH AT&T FOR WORK ASSOCIATED WITH UTILITIES AND STRUCTURES OWNED BY AT&T THIRTY (30) DAYS PRIOR TO THE START OF WORK. COORDINATE WITH ANY OTHER UTILITY OWNERS FOR WORK ASSOCIATED WITH UTILITIES AND STRUCTURES IMPACTED BY THIS PROJECT THIRTY (30) DAYS PRIOR TO THE START OF WORK.
5. CONSTRUCT AND MAINTAIN TEMPORARY FENCE ALONG PHASE LIMITS AT EACH PHASE. WHEN THE CURRENT PHASE IS COMPLETE, REMOVE THE TEMPORARY FENCING ALONG THE PERIMETER OF THE CURRENT PHASE AND BUILD THE FENCE ALONG THE PERIMETER OF THE NEXT PHASE.
6. COORDINATE WITH ADJACENT PROJECTS NOT IN CONTRACT (NIC) FOR ACCESS TO ADJACENT PROJECT AREAS. WORK SHALL BE COORDINATED AND CONDUCTED IN A MANNER THAT NO ADJACENT PROJECTS (NIC) ARE INTERRUPTED.
7. CONSTRUCT THE PROPOSED UTILITIES PRIOR TO ANY ABANDONMENT OR REMOVAL OF EXISTING UTILITIES. CONNECTING TO EXISTING WATER SYSTEM SHALL BE MADE ONLY AFTER SUCH SYSTEM IS DEPRESSURIZED BY CONTRACTOR. NO MORE THAN TWO FIRE HYDRANTS SHALL BE OUT OF SERVICE FOR NO MORE THAN 2 HOURS AT A TIME. DISINFECT POTABLE WATER PIPELINES. CONFORM TO AWWA C651 FOR DISINFECTION REQUIREMENTS.
8. COVER TRENCHES WITH STEEL PLATES DURING NON-CONSTRUCTION HOURS. ALL EXCAVATIONS SHALL BE BACKFILLED OR PLATED DURING NON-WORKING HOURS. ASPHALT RAMP SHALL BE PLACED AROUND EACH TRENCH PLATE TO PREVENT PLATE FROM BEING DISLODGED. MONITOR TRENCH PLATES DURING NON-WORKING HOURS TO ENSURE PLATES ARE NOT DISLODGED. NON-SKID TRENCH PLATES SHALL BE USED ON AREAS OPEN TO VEHICULAR TRAFFIC.
9. COORDINATE AND CONDUCT APPROPRIATE TRAFFIC CONTROL AT FERRY ST. AND TERMINAL WAY. AT LEAST ONE TRAFFIC LANE IN EACH DIRECTION SHALL REMAIN OPEN AT ALL TIMES. LOCAL TRAFFIC SHALL NOT BE INTERRUPTED DUE TO CONSTRUCTION ACTIVITIES. CONTRACTORS SHALL ATTEND WEEKLY COORDINATION MEETINGS FOR TUNNEL ACCESS USAGE.
10. ACCUMULATED PRECIPITATION MAY OCCUR DURING CONSTRUCTION. DEWATER ACCUMULATED PRECIPITATION PER PROJECT SPECIFICATIONS AND PREVENT ACCUMULATION OF RUNOFF IN STORM DRAINS UNTIL DOWNSTREAM CONNECTION TO EXISTING STORM DRAINS ARE COMPLETED.
11. COMPLY WITH THE TRAFFIC CONTROL MEASURES OF OTHER CONTRACTORS CONTROLLING PORTIONS OF THE SITE THROUGH WHICH THEY TRAVEL AND ALLOW OTHER CONTRACTORS TO TRAVEL THROUGH PORTIONS OF THE SITE IN WHICH THE CONTRACTOR IS WORKING.
12. PROVIDE ACCESS TO ALL DRIVEWAYS AND ADJACENT PROPERTIES AT ALL TIMES.
13. ENGINEER RESERVES THE RIGHT TO OBSERVE APPROVED TRAFFIC CONTROL PLANS IN USE AND MAKE NECESSARY CHANGES AS FIELD CONDITIONS WARRANT. THE CONTRACTOR SHALL BE RESPONSIBLE FOR THE PLACEMENT OF ANY ADDITIONAL TRAFFIC CONTROL DEVICES NECESSARY TO ENSURE PUBLIC SAFETY AT ALL TIMES.
14. TRAFFIC CONTROL SHALL BE REMOVED DURING NON-WORKING HOURS.
15. BE RESPONSIBLE FOR THE RESTORATION OF STRIPING AND PAVEMENT MARKINGS TO THE ORIGINAL CONDITIONS USING THERMOPLASTIC MATERIALS UNLESS OTHERWISE INSTRUCTED BY ENGINEER. ENGINEER SHALL INSPECT AND APPROVE ANY CONTRACTOR MARK OUT PRIOR TO THE FINAL INSTALLATION OF THE STRIPING BY CONTRACTOR.
16. BE RESPONSIBLE FOR ALL INSTALLATION, MAINTENANCE, AND REMOVAL OF ALL DEVICES SHOWN ON PLANS.
17. BE ON PROJECT SITE AT ALL TIMES TO MAINTAIN TRAFFIC CONTROL DEVICES DURING IMPLEMENTATION.
18. WORK OF THE PROJECT SHALL BE PERFORMED IN COOPERATION WITH THE PACIFIC HARBOR LINE (PHL). COORDINATE THE CONSTRUCTION ACTIVITIES WITH PHL AND COOPERATE WITH PHL. RAIL OPERATIONS TO BE MAINTAINED AT ALL TIMES.
19. THE CONSTRUCTION VEHICLES OF BOTH TIMSF AND TIGS (NIC) SHALL ACCESS THE PROJECT SITE THROUGH THE ONE-LANE WIDE EXISTING TUNNEL IN BOTH DIRECTIONS. PROVIDE FLAGGERS TO SAFELY AND EFFICIENTLY DIRECT VEHICLES THROUGH THE TUNNEL.
20. THE VERTICAL CLEARANCE AT THE EXISTING TUNNEL IS RESTRICTED TO 14 FEET. THE HEIGHT OF THE CONSTRUCTION VEHICLE SHALL NOT EXCEED 14 FEET. ADDITIONALLY, THE TUNNEL HAS A WIDTH OF 24 FEET, AND DUE TO VISUAL IMPAIRMENT, ONLY ONE VEHICLE IS PERMITTED AT A TIME.
21. THE PHASE 2 AREA WILL BE AVAILABLE FOR CONSTRUCTION ON 10/30/27.

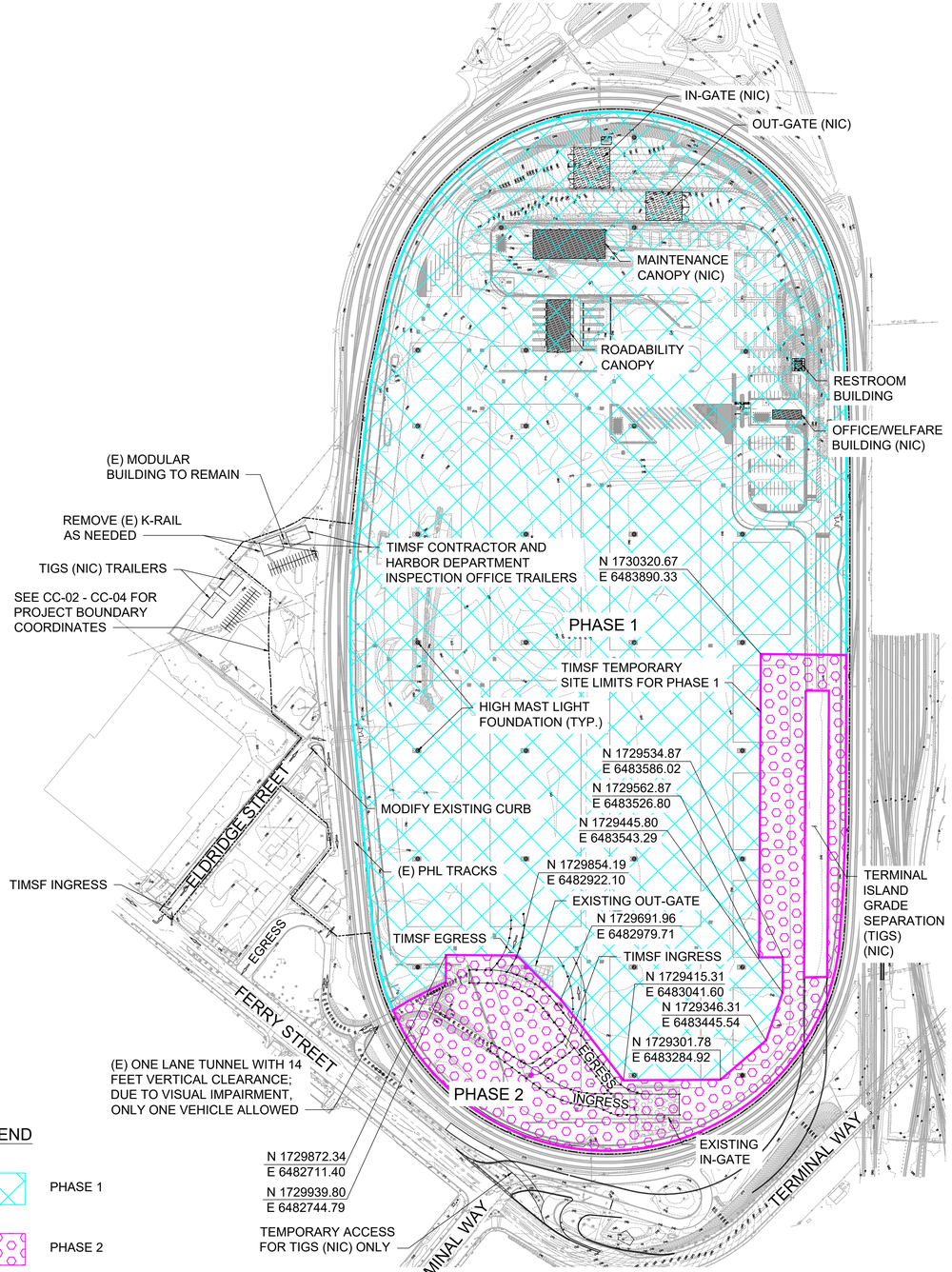

PH-01 / PH-01 PLAN
SCALE: 1" = 200'

NO.	DATE	DRAWN	REVISIONS -	CHK'D	APP'D
C	7/18/25	-	40% DESIGN		
D	9/19/25	-	80% DESIGN		

NOT FOR CONSTRUCTION

NO.	DATE	DRAWN	REVISIONS -	CHK'D	APP'D
			80% DESIGN REVIEW SEP 19 , 2025		

Jacobs
2600 MICHELSON DRIVE, SUITE 500
IRVINE, CA 92612
T: (949) 224-7500
F: (949) 224-7501

REGISTERED PROFESSIONAL ENGINEER — MICHAEL S. McANIS — No. 60573 — CIVIL — STATE OF CALIFORNIA

SCALE: 1"=100'
DRAWN: E. FLORES
CHECKED: G. NGUYEN
DESIGNED: M. DESAI
ENGINEER / ARCHITECT

TERMINAL ISLAND MARITIME SUPPORT FACILITY

PHASING PLAN

THE PORT OF LOS ANGELES
ENGINEERING DIVISION
425 S. PALOS VERDES STREET SAN PEDRO CA 90731-3309

DRAWING NUMBER: 1-3513
SHEET NUMBER: PH-01

POLARIS1_040320_BWD

EROSION CONTROL NOTES:

1. IN CASE OF EMERGENCY, CONTACT: SEE SPECIFICATION SECTION 01 31 13.
2. A STAND-BY CREW FOR EMERGENCY WORK SHALL BE AVAILABLE AT ALL TIMES DURING THE RAINY SEASON (NOVEMBER 1 TO APRIL 15). NECESSARY MATERIALS SHALL BE AVAILABLE ONSITE AND STOCKPILED AT CONVENIENT LOCATIONS TO FACILITATE RAPID CONSTRUCTION OF EMERGENCY DEVICES WHEN RAIN IS IMMINENT.
3. EROSION CONTROL DEVICES SHOWN ON THIS PLAN AND/OR REQUIRED BY THE BEST MANAGEMENT PRACTICES MAY BE REMOVED WHEN APPROVED BY THE BUILDING OFFICIAL IF THE GRADING OPERATION HAS PROGRESSED TO THE POINT WHERE THEY ARE NO LONGER REQUIRED.
4. GRADED AREAS ADJACENT TO FILL SLOPES LOCATED AT THE SITE PERIMETER MUST DRAIN AWAY FROM THE TOP OF SLOPE AT THE CONCLUSION OF EACH WORKING DAY.
5. ALL SILT AND DEBRIS SHALL BE REMOVED FROM ALL DEVICES WITHIN 24 HOURS AFTER EACH RAINSTORM AND BE DISPOSED OF PROPERLY.
6. A GUARD SHALL BE POSTED ON THE SITE WHENEVER THE DEPTH OF WATER IN ANY DEVICE EXCEEDS TWO FEET. THE DEVICE SHALL BE DRAINED OR PUMPED DRY WITHIN 24 HOURS AFTER EACH RAINSTORM.
7. EXCEPT AS OTHERWISE APPROVED BY THE CITY INSPECTOR, ALL REMOVABLE PROTECTIVE DEVICES SHOWN SHALL BE IN PLACE AT THE END OF EACH WORKING DAY OR ON WEEKENDS WHEN THE FIVE DAY RAIN PROBABILITY FORECAST EXCEEDS 50%.
8. THE PLACEMENT OF ADDITIONAL DEVICES TO REDUCE EROSION DAMAGE WITHIN THE SITE IS LEFT TO THE DISCRETION OF THE FIELD ENGINEER/CITY INSPECTOR. ADDITIONAL DEVICES AS NEEDED SHALL BE INSTALLED TO RETAIN SEDIMENTS AND OTHER POLLUTANTS ON SITE.
9. DESILTING BASINS MAY NOT BE REMOVED OR MADE INOPERABLE BETWEEN NOVEMBER 1 AND APRIL 15 OF THE FOLLOWING YEAR WITHOUT THE APPROVAL OF THE CITY INSPECTOR.
10. EROSION CONTROL DEVICES ARE TO BE MODIFIED, AS NEEDED, AS THE PROJECT PROGRESSES. THE DESIGN AND PLACEMENT OF THESE DEVICES IS THE RESPONSIBILITY OF THE FIELD ENGINEER. PLANS OF THESE CHANGES MUST BE SUBMITTED FOR APPROVAL IF REQUESTED BY THE CITY INSPECTOR.
11. EVERY EFFORT SHOULD BE MADE TO ELIMINATE THE DISCHARGE OF NON-STORMWATER FROM THE PROJECT SITE AT ALL TIMES.
12. ERODED SEDIMENTS AND OTHER POLLUTANTS MUST BE RETAINED ON-SITE AND MAY NOT BE TRANSPORTED FROM THE SITE VIA SHEET FLOW, SWALES, AREA DRAINS, NATURAL DRAINAGE COURSES, OR WIND.
13. STOCKPILES OF EARTH OR OTHER CONSTRUCTION-RELATED MATERIALS MUST BE PROTECTED FROM BEING TRANSPORTED FROM THE SITE BY THE FORCES OF WIND OR WATER.
14. FUELS, OILS, SOLVENTS AND OTHER TOXIC MATERIALS MUST BE STORED IN ACCORDANCE WITH THEIR LISTING AND ARE NOT TO CONTAMINATE THE SOILS AND SURFACE WATERS. ALL APPROVED STORAGE CONTAINERS ARE TO BE PROTECTED FROM THE WEATHER. SPILLS MUST BE CLEANED UP IMMEDIATELY AND DISPOSED OF IN A PROPER MANNER. SPILLS MAY NOT BE WASHED INTO THE DRAINAGE SYSTEM.
15. EXCESS WASTE CONCRETE MAY NOT BE WASHED INTO THE PUBLIC WAY OR ANY OTHER DRAINAGE SYSTEM. PROVISIONS SHALL BE MADE TO RETAIN CONCRETE WASTES ON PROJECT SITE UNTIL THEY CAN BE DISPOSED OF AS SOLID WASTE.
16. CONTRACTORS SHALL BE RESPONSIBLE TO INSPECT ALL EROSION CONTROL DEVICES AND BMPs ARE INSTALLED AND FUNCTIONING PROPERLY IF THERE IS A 50% OR GREATER PROBABILITY OF PREDICTED PRECIPITATION, AND AFTER ACTUAL PRECIPITATION.
17. TRASH AND CONSTRUCTION-RELATED SOLID WASTES MUST BE DEPOSITED INTO A COVERED RECEPTACLE TO PREVENT CONTAMINATION OF RAINWATER AND DISPERSAL BY WIND.
18. SEDIMENTS AND OTHER MATERIALS MAY NOT BE TRACKED FROM PROJECT SITE BY VEHICLE TRAFFIC. THE CONSTRUCTION ENTRANCE ROADWAYS MUST BE STABILIZED SO AS TO INHIBIT SEDIMENTS FROM BEING DEPOSITED INTO THE PUBLIC WAY. ACCIDENTAL DEPOSITIONS MUST BE SWEPT UP IMMEDIATELY AND MAY NOT BE WASHED DOWN BY RAIN OR OTHER MEANS.
19. ANY SLOPES WITH DISTURBED SOILS OR DENUDED OF VEGETATION MUST BE STABILIZED SO AS TO INHIBIT EROSION BY WIND AND WATER.
20. ADD THE FOLLOWING NOTES (OR SIMILAR) TO THE PLANS TO DEFINE THE CURRENT STATE OF CONSTRUCTION.
    - 20.1. STORM DRAINS AND CATCH BASIN ARE NOT CONSTRUCTED.
    - 20.2. STREETS ARE PAVED, EXCEPT AS NOTED ON THE EROSION CONTROL PLAN.
    - 20.3. DRAINAGE DEVICES ARE NOT CONSTRUCTED, EXCEPT AS NOTED ON PLANS.
21. STORMWATER POLLUTION CONTROL REQUIREMENTS MUST BE INTEGRATED INTO THE EROSION CONTROL PLANS PER TITLE 26, SECTION 7010 OF THE COUNTY CODE FOR ANY CONSTRUCTION BETWEEN OCTOBER 1 AND APRIL 15.
22. BEST MANAGEMENT PRACTICES (BMPs) ARE SPECIFIED HEREON FOR THIS PROJECT TO CONTROL STORMWATER AND OTHER RUNOFF POLLUTION FROM THE PROJECT SITE DURING CONSTRUCTION AND ARE TO BE IMPLEMENTED YEAR ROUND. THE BMPs ARE FROM THE "CALIFORNIA STORMWATER BMP HANDBOOK" (JANUARY 2015) BY THE CALIFORNIA STORMWATER QUALITY ASSOCIATION. EACH BMP HAS A FACT SHEET THAT DESCRIBES THE BMP OBJECTIVES AND TARGETED CONSTITUENTS, AND EXPLAINS IMPLEMENTATION AND INSPECTION REQUIREMENTS. THE BMPs ARE TO BE FOLLOWED PER THE FACT SHEETS UNLESS OTHERWISE SUPERSEDED BY A NOTE ON THESE PLANS. BMP FACT SHEETS ARE EITHER ATTACHED HERETO OR CAN BE FOUND AT DPW.LACOUNTY.GOV/CONS/SPECS/BMPMANUAL.PDF OR PURCHASED FROM CASQA AT WWW.CASQA.ORG/RESOURCES/BMP-HANDBOOKS/CONSTRUCTION.
23. PROJECT SITE IS PRESENTLY (PRIOR TO CONSTRUCTION) PAVED WITH ASPHALT CONCRETE TO BE REMOVED DURING CONSTRUCTION ACTIVITIES. THERE ARE NO AREAS OF VEGETATIVE COVER OR NATIVE VEGETATION AT THE PROJECT SITE.
24. BY NECESSITY, PROJECT SITE LOCATIONS OF CONSTRUCTION MATERIAL LOADING, UNLOADING AND ACCESS; CONSTRUCTION VEHICLE AND EQUIPMENT STORAGE, CLEANING AND MAINTENANCE; AND, TO A LESSER EXTENT WASTE STORAGE, WILL CHANGE FROM TIME TO TIME AS WORK PROGRESSES FROM ONE AREA OF PROJECT SITE TO ANOTHER. AS A RESULT, IT IS NOT PRACTICAL TO SPECIFY LOCATIONS FOR THE ABOVE DESCRIBED CONSTRUCTION ACTIVITIES. THE LOCATIONS FOR THE ABOVE ACTIVITIES CAN CHANGE AS WORK PROGRESSES BUT ONLY IF THE FOLLOWING CONDITIONS ARE MET:
    - 24.1. THE CHANGING OF SUCH LOCATIONS IS MINIMIZED TO THE EXTENT POSSIBLE, AND;
    - 24.2. THE BEST MANAGEMENT PRACTICES FOR THESE ACTIVITIES ARE FOLLOWED AT EACH LOCATION.
25. THE EROSION CONTROL PLANS AND GRADING PLANS SHOW AREAS OF SOIL DISTURBANCE, CUT OR FILL AND THE DRAINAGE PATTERN ACROSS THE PROJECT SITE, AND, (IF APPLICABLE) RELEVANT OFF-SITE DRAINAGE AREAS INCLUDING DRAINAGE PATTERN AND SLOPES ANTICIPATED AFTER MAJOR GRADING ACTIVITIES, AND, (IF APPLICABLE) MEASURES NECESSARY TO DIVERT ONSITE STORMWATER RUN-ON FROM OFF-SITE PROPERTIES.
26. THE EROSION CONTROL PLANS AND GRADING PLANS SHOW THE CONSTRUCTION PROJECT INCLUDING EXISTING AND PLANNED PAVED AREAS, ROADWAYS AND BUILDINGS, PROJECT SITE TOPOGRAPHY (BEFORE AND AFTER CONSTRUCTION), PROPOSED STORMWATER COLLECTION AND DISCHARGE POINTS INCLUDING DRAINAGE AREA AND PATTERN FOR EACH STORMWATER INLET POINT AND THE BEST MANAGEMENT PRACTICES NECESSARY TO PROTECT SUCH INLETS FROM CONTAMINATED DISCHARGES.
27. A STORMWATER POLLUTION PREVENTION PLAN WILL BE PREPARED FOR THIS PROJECT IT WILL SPECIFY BEST MANAGEMENT PRACTICES TO CONTROL NON-STORMWATER DISCHARGE FROM THE PROJECT SITE.

BEST MANAGEMENT PRACTICES (BMP) NOTES:

THE FOLLOWING BMPs FROM THE "CASQA CONSTRUCTION BMP HANDBOOK/PORTAL", MUST BE IMPLEMENTED FOR ALL CONSTRUCTION ACTIVITIES AS APPLICABLE. BMPs FROM THE "CALIFORNIA STORMWATER BMP CONSTRUCTION HANDBOOK - JANUARY 2015" MAY BE USED IF DETAIL IS INDICATED. ADDITIONAL MEASURES MAY BE REQUIRED IF DEEMED APPROPRIATE. BMPS IMPLEMENTED SHALL ALSO COMPLY WITH THE CALIFORNIA STORMWATER BEST MANAGEMENT PRACTICE HANDBOOK-CONSTRUCTION ACTIVITY (2017) AND THE CALTRANS STORMWATER QUALITY HANDBOOKS, CONSTRUCTION GUIDE AND SPECIFICATIONS (1997) PER CITY OF LONG BEACH INFORMATION BULLETINS IB-BU-038, IB-BU-039, AND IB-BU-042.

EROSION CONTROL BMPS:
EC1 - SCHEDULING - ESC1
EC2 - PRESERVATION OF EXISTING VEGETATION - ESC2
EC3 - HYDRAULIC MULCH - ESC11
EC4 - HYDROSEEDING - ESC10
EC5 - SOIL BINDERS
EC6 - STRAW MULCH - ESC11
EC7 - GEOTEXTILES AND MATS - ESC20
EC8 - WOOD MULCHING - ESC11
EC9 - EARTH DIKES AND DRAINAGE SWALES - ESC30/31
EC10 - VELOCITY DISSIPATION DEVICES
EC11 - SLOPE DRAINS - ESC32
EC12 - STREAMBANK STABILIZATION
EC13 - (RESERVED)
EC14 - COMPOST BLANKETS
EC15 - SOIL PREPARATION/ROUGHENING - ESC42
EC16 - NON-VEGETATED STABILIZATION

TEMPORARY SEDIMENT CONTROL BMPS:
SE1 - SILT FENCE - ESC50
SE2 - SEDIMENT BASIN - ESC56
SE3 - SEDIMENT TRAP - ESC55
SE4 - CHECK DAM - ESC41
SE5 - FIBER ROLLS - ESC53
SE6 - GRAVEL BAG BERM - ESC53
SE7 - STREET SWEEPING AND VACUUMING
SE8 - SANDBAG BARRIER - ESC52
SE9 - STRAW BALE BARRIER - ESC51
SE10 - STORM DRAIN INLET PROTECTION - ESC54
SE11 - ACTIVE TREATMENT SYSTEMS
SE12 - TEMPORARY SILT DIKE
SE13 - COMPOST SOCKS & BERMS
SE14 - BIOFILTER BAGS

WIND EROSION CONTROL BMPS:
WE1 - WIND EROSION CONTROL

TRACKING CONTROL BMPS:
TC1 - STABILIZED CONSTRUCTION ENTRANCE/EXIT - ESC24
TC2 - STABILIZED CONSTRUCTION ROADWAY - ESC23
TC3 - ENTRANCE/OUTLET TIRE WASH

NON-STORMWATER MANAGEMENT BMPS:
NS1 - WATER CONSERVATION PRACTICES - CD4(2)
NS2 - DEWATERING OPERATIONS
NS3 - PAVING AND GRINDING OPERATIONS
NS4 - TEMPORARY STREAM CROSSING - ESC22
NS5 - CLEAR WATER DIVERSION
NS6 - ILLICIT CONNECTION/DISCHARGE
NS7 - POTABLE WATER/IRRIGATION
NS8 - VEHICLE AND EQUIPMENT CLEANING - CA30
NS9 - VEHICLE AND EQUIPMENT FUELING - CA31
NS10 - VEHICLE AND EQUIPMENT MAINTENANCE - CA32
NS11 - PILE DRIVING OPERATIONS
NS12 - CONCRETE CURING
NS13 - CONCRETE FINISHING
NS14 - MATERIAL AND EQUIPMENT USE
NS15 - DEMOLITION ADJACENT TO WATER
NS16 - TEMPORARY BATCH PLANT

WASTE MANAGEMENT AND MATERIALS POLLUTION CONTROL BMPs:
WM1 - MATERIAL DELIVERY AND STORAGE - CA10
WM2 - MATERIAL USE - CA11
WM3 - STOCKPILE MANAGEMENT
WM4 - SPILL PREVENTION AND CONTROL - CA12
WM5 - SOLID WASTE MANAGEMENT - CA21
WM6 - HAZARDOUS WASTE MANAGEMENT
WM7 - CONTAMINATED SOIL MANAGEMENT
WM8 - CONCRETE WASTE MANAGEMENT - CA23
WM9 - SANITARY/SEPTIC WASTE MANAGEMENT
WM10 - LIQUID WASTE MANAGEMENT

NO.	DATE	DRAWN	REVISIONS -	CHK'D	APP'D
D	9/19/25	-	80% DESIGN NOT FOR CONSTRUCTION		

NO.	DATE	DRAWN	REVISIONS -	CHK'D	APP'D
			80% DESIGN REVIEW SEP 19 , 2025		

Jacobs
2600 MICHELSON DRIVE, SUITE 500
IRVINE, CA 92612
T: (949) 224-7500
F: (949) 224-7501

REGISTERED PROFESSIONAL ENGINEER
MICHAEL S. MCAMIS
No. 60573
CIVIL
STATE OF CALIFORNIA

SCALE: NONE
DRAWN: A. TRUJILLO
CHECKED: G. NGUYEN
DESIGNED: S. MCAMIS
ENGINEER / ARCHITECT

TERMINAL ISLAND MARITIME SUPPORT FACILITY

EROSION CONTROL KEY PLAN AND NOTES

THE PORT OF LOS ANGELES
ENGINEERING DIVISION
425 S. PALOS VERDES STREET SAN PEDRO CA 90731-3309

DRAWING NUMBER: 1-3513
SHEET NUMBER: C-01

CONSTRUCTION NOTES:

1. INSTALL SINGLE ROW EROSION CONTROL BAGS (SE6, SE8/ESC53, ESC51) PER DETAIL 1C-04
2. INSTALL FIBER ROLL (SE5, ESC53) PER DETAIL 6C-04
3. INSTALL STORM DRAIN INLET PROTECTION (SE10/ESC54) PER DETAIL 2C-04
4. INSTALL CONCRETE WASHOUT PER DETAIL 5C-04
5. INSTALL COMBINED STAGING AND MATERIALS STORAGE AREA (WM1, WM3/CA10)
6. INSTALL STABILIZED CONSTRUCTION ENTRANCE (TC1/ESC24) PER DETAIL 4C-04

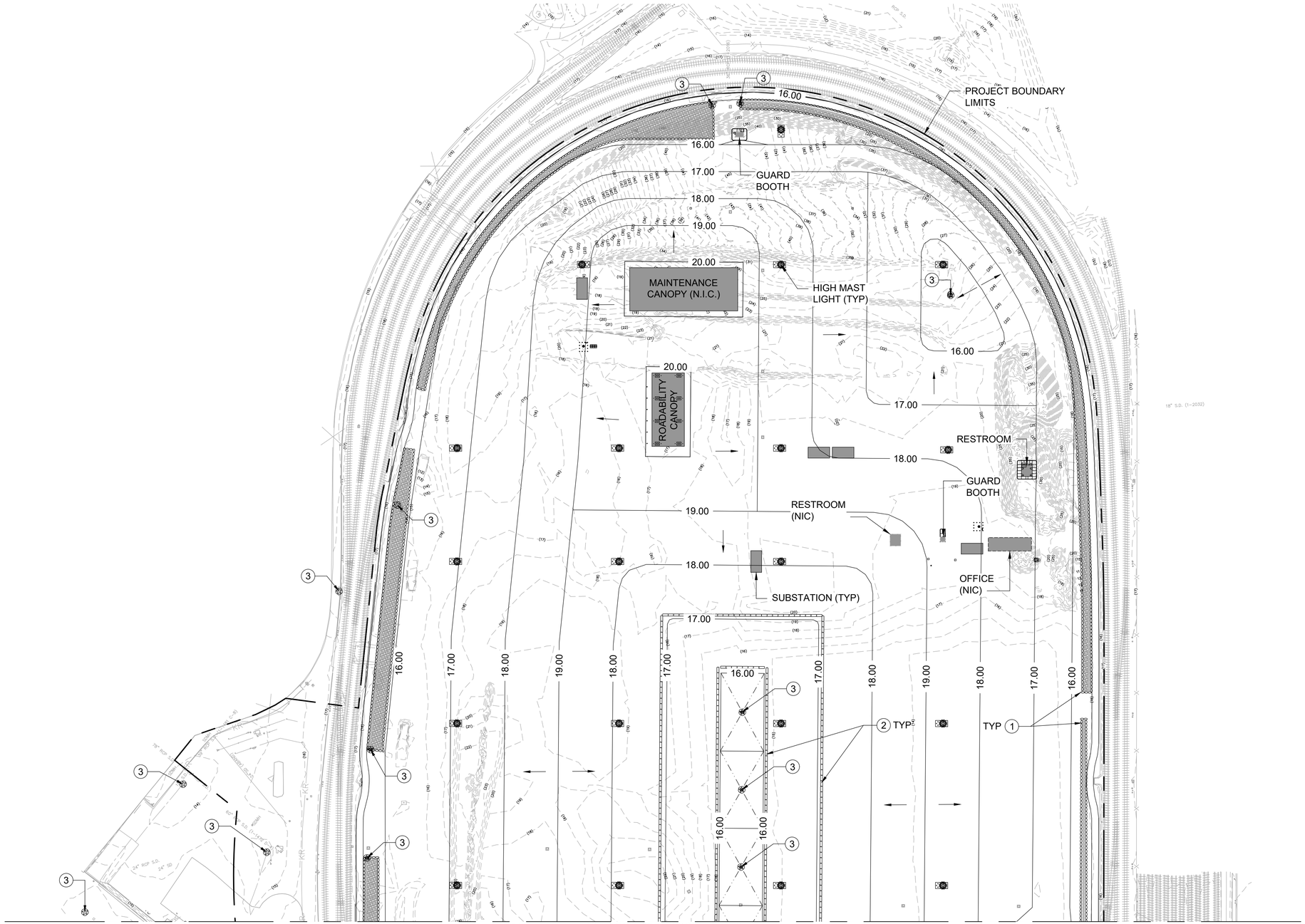

1C-02 / C-02 EROSION CONTROL PLAN - AREA 1

SCALE: 1" = 100'

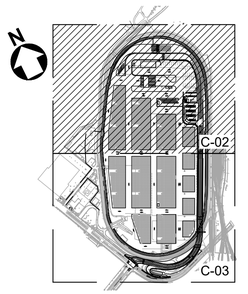

KEY MAP

100' 0' 100' 200'

SCALE: 1" = 100'

NO.	DATE	DRAWN	REVISIONS -	CHK'D	APP'D
D	9/19/25	-	80% DESIGN		

NOT FOR CONSTRUCTION

NO.	DATE	DRAWN	REVISIONS -	CHK'D	APP'D
			80% DESIGN REVIEW SEP 19 , 2025		

Jacobs
2600 MICHELSON DRIVE, SUITE 600
IRVINE, CA 92612
T: (949) 224-7500
F: (949) 224-7501

REGISTERED PROFESSIONAL ENGINEER — MICHAEL S. McAMIS — No. 60573 — CIVIL — STATE OF CALIFORNIA

SCALE: 1"=100'
DRAWN: A. TRUJILLO
CHECKED: G. NGUYEN
DESIGNED: S. MCAMIS
ENGINEER / ARCHITECT

TERMINAL ISLAND MARITIME SUPPORT FACILITY

EROSION CONTROL PLAN - AREA 1

THE PORT OF LOS ANGELES
ENGINEERING DIVISION
425 S. PALOS VERDES STREET SAN PEDRO CA 90731-3309

DRAWING NUMBER: 1-3513
SHEET NUMBER: C-02

MATCHLINE, SEE DRAWING U-01 FOR CONTINUATION

PROJECT BOUNDARY LIMITS

HIGH MAST LIGHT (TYP)

SUBSTATION (TYP)

TYP

TERMINAL ISLAND GRADE SEPARATION (NIC) (SEE DRAWING 1-3497)

16.00

17.00

18.00

19.00

15.00

CONSTRUCTION NOTES:

1. INSTALL SINGLE ROW EROSION CONTROL BAGS (SE6, SE8/ESC53, ESC51) PER DETAIL 1C-04
2. INSTALL FIBER ROLL (SE5, ESC53) PER DETAIL 6C-04
3. INSTALL STORM DRAIN INLET PROTECTION (SE10/ESC54) PER DETAIL 2C-04
4. INSTALL CONCRETE WASHOUT PER DETAIL 5C-04
5. INSTALL COMBINED STAGING AND MATERIALS STORAGE AREA (WM1, WM3/CA10)
6. INSTALL STABILIZED CONSTRUCTION ENTRANCE (TC1/ESC24) PER DETAIL 4C-04

1C-03 / C-03 EROSION CONTROL PLAN - AREA 2

SCALE: 1" = 100'

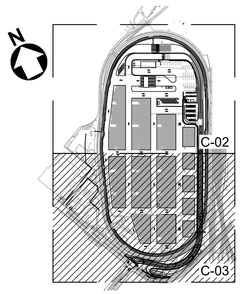

KEY MAP

100' 0' 100' 200'

SCALE: 1" = 100'

NO.	DATE	DRAWN	REVISIONS -	CHK'D	APP'D
D	9/19/25	-	80% DESIGN		

NOT FOR CONSTRUCTION

NO.	DATE	DRAWN	REVISIONS -	CHK'D	APP'D
			80% DESIGN REVIEW SEP 19 , 2025		

Jacobs
2600 MICHELSON DRIVE, SUITE 500
IRVINE, CA 92612
T: (949) 224-7500
F: (949) 224-7501

REGISTERED PROFESSIONAL ENGINEER — MICHAEL S. McAMIS — No. 60573 — CIVIL — STATE OF CALIFORNIA

SCALE: 1"=100'
DRAWN: A. TRUJILLO
CHECKED: G. NGUYEN
DESIGNED: S. MCAMIS
ENGINEER / ARCHITECT

TERMINAL ISLAND MARITIME SUPPORT FACILITY

EROSION CONTROL PLAN - AREA 2

THE PORT OF LOS ANGELES
ENGINEERING DIVISION
425 S. PALOS VERDES STREET SAN PEDRO CA 90731-3309

DRAWING NUMBER: 1-3513
SHEET NUMBER: C-03

POLAPRO1_042023_BWD

NOTE:
EROSION CONTROL BAG SHALL BE FILLED WITH GRAVEL, SAND, OR OTHER PERMEABLE MATERIAL

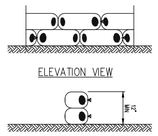

SINGLE ROW
EROSION CONTROL BAGS
(TEMPORARY SEDIMENT CONTROL BMP
SE6, SE8, SE14/ESC52, SEC53)

1C-04 - EROSION CONTROL BAG
SCALE: NTS

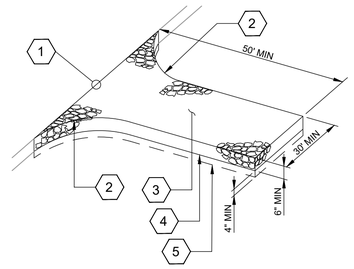

1. EXISTING PAVEMENT OR APPROVED ACCESS POINT.
2. 25' R, MIN.
3. CLEAN PIT RUN OR NJ DOT STANDARD NO. 2 STONE.
4. FREE DRAINING EXCAVATED MATERIAL.
5. GEOTEXTILE

NOTES:

A. ADDITIONAL GRAVEL SHALL BE ADDED PERIODICALLY TO MAINTAIN PROPER FUNCTION OF THE PAD.

B. REMOVE GRAVEL ENTRANCE AND REPLACE WITH NEW BASE COURSE PRIOR TO COMPLETION OF ACCESS ROAD.

4C-04 - GRAVEL CONSTRUCTION ENTRANCE
SCALE: NTS

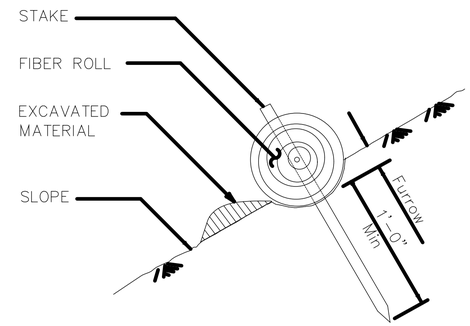

SECTION

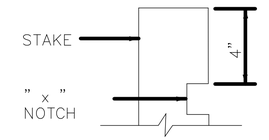

ELEVATION

STAKE NOTCH DETAIL

NOTES:
1. Temporary fiber roll spacing varies depending upon slope inclination.
2. Installations shown in the perspectives are for slope inclination of 10:1 and steeper.

TEMPORARY FIBER ROLL (TYPE 1)

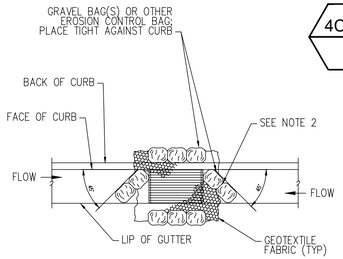

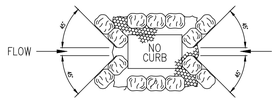

(TEMPORARY SEDIMENT CONTROL
BMP SE10/ESC54)

1. SEDIMENT TRAPPED UPSTREAM OF SEDIMENT CONTROL BMP SHALL BE REMOVED WEEKLY AND PRIOR TO A RAINFALL EVENT.
2. PLACE BMPS TIGHTLY TOGETHER AT JOINTS TO PREVENT SEEPAGE AT JOINTS.
3. INLET SEDIMENT CONTROL MUST BE INSPECTED WEEKLY AND AFTER EACH STORM AND REPAIRED OR REPLACED AS NEEDED.
4. INSTALL FILTER BAG OR USE GEOTEXTILE FABRIC OVER INLET; SECURE FABRIC IN-PLACE WITH EROSION CONTROL BAGS.

2C-04 - STORM DRAIN PROTECTION
SCALE: NTS

NOTES:
1. CONCRETE WASHOUT SHALL MEET REQUIREMENTS OF BMP CA23.
2. FACE SIGN TOWARD NEAREST STREET OR ACCESS POINT.
3. CONCRETE WASHOUT SHALL BE LOCATED BEHIND CURB AND 50' MINIMUM FROM DRAINAGE INLETS OR WATERCOURSES.
4. J-BARS MAY REQUIRE PRE-DRILLING IN PAVED AREAS. HOLES SHALL BE PATCHED AFTER REMOVAL.
5. AN ECO PAN CAN BE USED AS A SUBSTITUTE.
6. DO NOT FILL WASHOUT OVER 75% FULL.

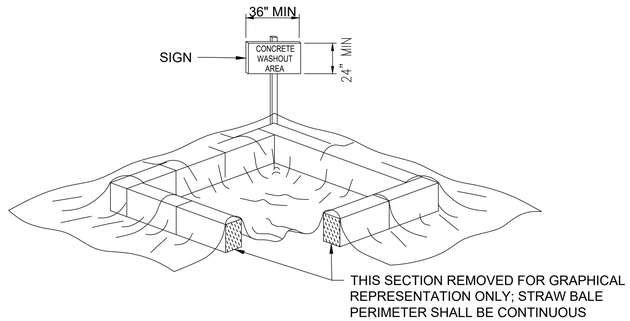

(WASTE MANAGEMENT CONTROL
BMP WM8/CA23)

5C-04 - CONCRETE WASHOUT
SCALE: NTS

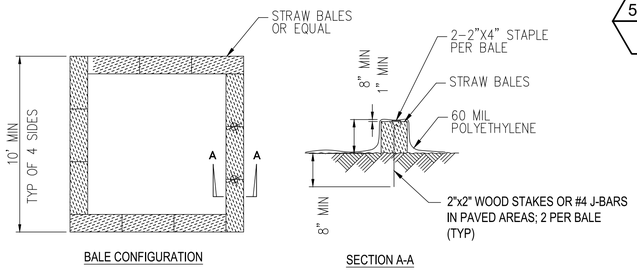

BALE CONFIGURATION

SECTION A-A

3C-04 - STRAW BALES FOR OVERLAND FLOW
SCALE: NTS

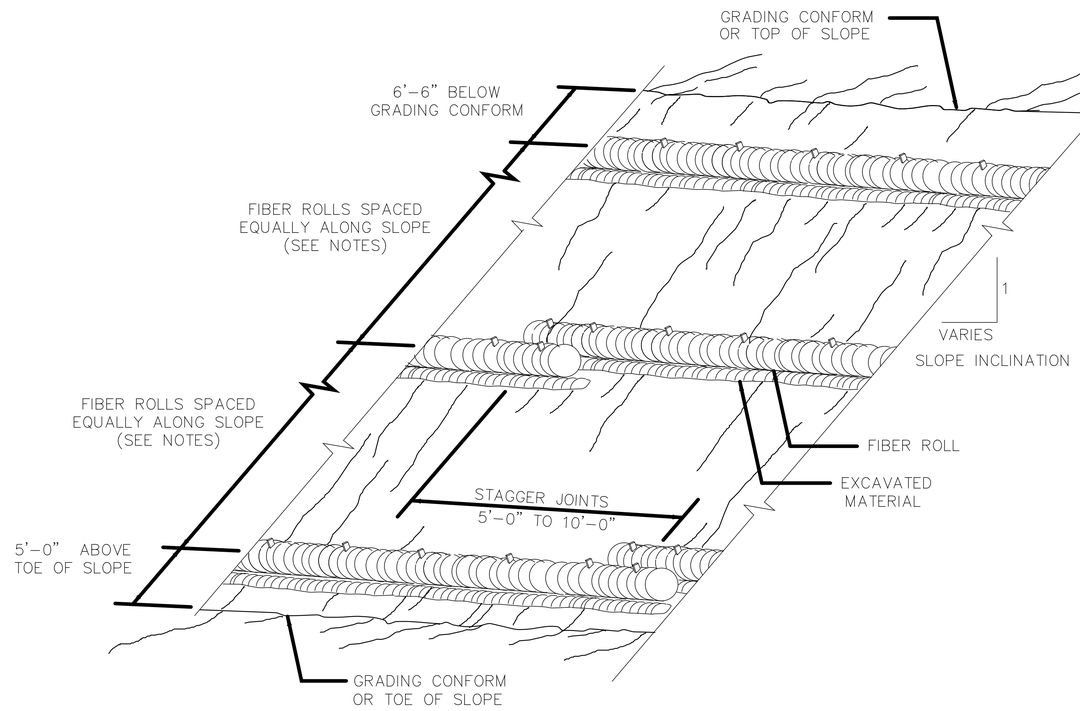

PERSPECTIVE

TEMPORARY FIBER ROLL (TYPE 1)

6C-04 - TEMPORARY FIBER ROLL
SCALE: NTS

NO.	DATE	DRAWN	REVISIONS -	CHK'D	APP'D
D	9/19/25	-	80% DESIGN		
			NOT FOR CONSTRUCTION		

NO.	DATE	DRAWN	REVISIONS -	CHK'D	APP'D
			80% DESIGN REVIEW SEP 19 , 2025		

Jacobs
2600 MICHELSON DRIVE, SUITE 500
IRVINE, CA 92612
T: (949) 224-7500
F: (949) 224-7501

REGISTERED PROFESSIONAL ENGINEER
MICHAEL S. McAMIS
No. 60573
CIVIL
STATE OF CALIFORNIA

SCALE:	AS SHOWN
DRAWN:	A. TRUJILLO
CHECKED:	G. NGUYEN
DESIGNED:	S. MCAMIS
	ENGINEER / ARCHITECT

TERMINAL ISLAND MARITIME SUPPORT FACILITY

EROSION CONTROL DETAILS

THE PORT OF LOS ANGELES
ENGINEERING DIVISION
425 S. PALOS VERDES STREET SAN PEDRO CA 90731-3309

DRAWING NUMBER	SHEET NUMBER
1-3513	C-04

POLAPRO1_042023_BWD

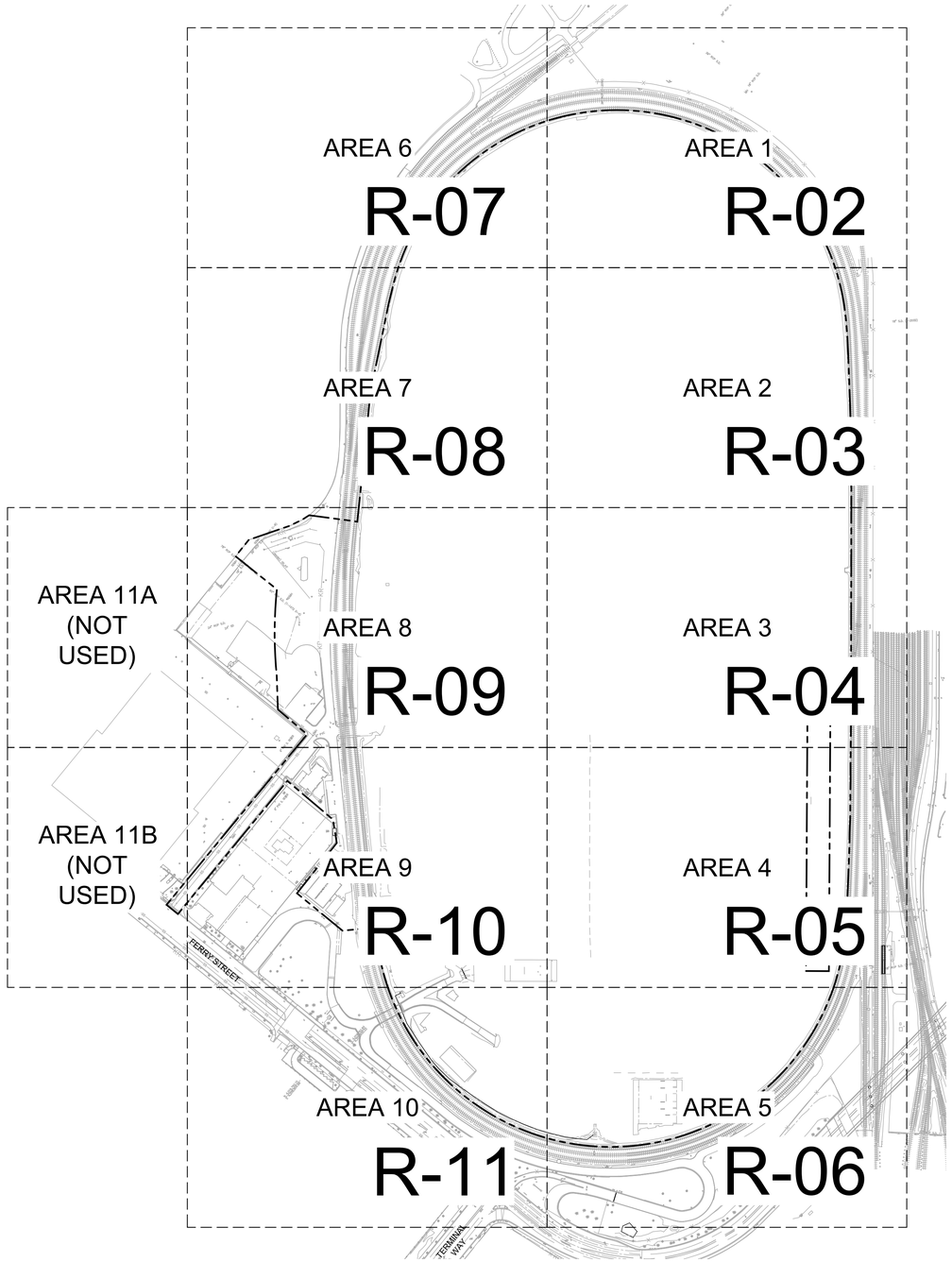

1R-01
R-01
REMOVAL KEY PLAN AND NOTES
SCALE: 1" = 200'

GENERAL REMOVAL NOTES:

A. GENERAL DEMOLITION NOTES:

1. PRIOR TO COMMENCING WORK, EXISTING SITE CONDITIONS SHALL BE FIELD VERIFIED WITH ENGINEER TO CONFIRM THE LIMIT OF WORK ACTIVITIES. EACH ITEM OF WORK SHALL BE DESCRIBED AND ACCOUNTED FOR IN CONTRACT DOCUMENTS.
2. DEBRIS SHALL BE WET AT TIME OF HANDLING TO PREVENT DUST.
3. APPROVAL OF PROTECTION FENCES AND CANOPIES ARE REQUIRED PRIOR TO DEMOLITION
4. VOIDS CAUSED BY DEMOLITION AND REMOVALS SHALL BE FILLED AND COMPACTED AS SPECIFIED.
5. DE-ENERGIZE ELECTRICAL WIRING AND EQUIPMENT PRIOR TO REMOVAL. CONTACT ENGINEER 48 HOURS PRIOR TO WORK.
6. DETAILS OF EXISTING FIELD CONDITIONS SHOWN ON DRAWINGS ARE APPROXIMATE. FIELD VERIFY EXISTING CONDITIONS.
7. ITEMS OUTSIDE OF REMOVAL LIMITS AND CALLED OUT AS EXISTING SHALL REMAIN AND BE PROTECTED IN PLACE, RESPECTIVELY, UNLESS OTHERWISE NOTED. FOR EXAMPLE, 5-PILE TIMBER DOLPHIN PILES SHALL BE REMOVED ALTHOUGH THEY ARE LOCATED OUTSIDE OF THE REMOVAL LIMITS.
8. REMOVAL LIMIT OF PAVEMENT, SIDEWALK, CURB, GUTTER, UTILITIES, AND THE LIKE, SHALL BE PER DRAWINGS AND VERIFIED WITH ENGINEER PRIOR TO REMOVAL. SEE SHEET R-07 AND R-08 FOR COORDINATES INFORMATION.
9. REPAIR, AT NO COST TO DEPARTMENT, ANYTHING DAMAGED OUTSIDE OF THE REMOVAL LIMITS OR ANYTHING NOT CALLED OUT FOR REMOVAL.
10. EXISTING ELEVATIONS, DIMENSIONS, DETAILS, AND SECTIONS SHOWN HEREIN ARE FOR GENERAL INFORMATION ONLY. FIELD VERIFY TO CONFIRM ACTUAL CONDITIONS.
11. PLACE AND COMPACT FILL MATERIAL TO 95% RELATIVE. BACKFILL AND GRADE EXCAVATIONS PER DRAWINGS AND SPECIFICATIONS.
12. EXISTING CHAIN LINK FENCE TO REMAIN, UNLESS OTHERWISE SPECIFIED ON DRAWINGS. ANY DAMAGE CAUSED TO THE CHAIN LINK FENCE SHALL BE REPLACED WITH NEW CHAIN LINK FENCE AT CONTRACTOR'S SOLE COST AND EXPENSE.
13. ELEVATIONS ARE REFERENCED USING MEAN LOWER LOW WATER AT ELEVATION 0'-0".
14. EXISTING UTILITY MARKERS SHALL BE RELOCATED BY THE CORRESPONDING UTILITY COMPANY. CONTRACTOR SHALL COORDINATE RELOCATIONS. REFER TO SPECIFICATIONS FOR UTILITY CONTACTS.
15. MAINTAIN A TEMPORARY FENCE ALONG REMOVAL LIMITS FOR THE DURATION OF CONTRACT.
16. PROTECT-IN-PLACE ROADS, UTILITIES, ETC THAT ARE NOT CALLED OUT FOR REMOVAL.
17. IF ANY HAZARDOUS MATERIALS ARE ENCOUNTERED DURING DEMOLITION STOP WORK AND NOTIFY ENGINEER.
18. SOUTH COAST AIR QUALITY MANAGEMENT DISTRICT (SCAQMD) APPROVAL IS REQUIRED FOR ASBESTOS ABATEMENT PRIOR TO COMMENCING WORK. (NOTE SCAQMD REQUIRES 10 WORKING DAYS WAITING PERIOD PRIOR TO PERMIT).
19. EXCAVATIONS SHALL MEET REGULATIONS AND BE PROTECTED IN AREAS ADJACENT TO PUBLIC ACCESS.
20. NOTIFY ENGINEER IMMEDIATELY WHEREVER EXISTING EQUIPMENT IS ENCOUNTERED WHICH MUST BE RELOCATED DUE TO THE NEW CONSTRUCTION.
21. PROVIDE DUST CONTROL FOR THE DURATION OF DEMOLITION ACTIVITIES.
22. ANY VERTICAL EARTH CUTS CREATED BY DEMOLITION SHALL BE GRADED AT 1:1 MAXIMUM. UNLESS OTHERWISE SPECIFIED BY A GEOTECHNICAL REPORT.
23. DISPOSE MATERIAL PER SPECIFICATIONS.
24. FOR ABOVE AND BELOW GROUND UTILITIES RELATED REMOVALS SEE R SHEETS.
25. REFER TO CS SHEETS FOR ASPHALT RESURFACING EXTENTS.
26. PROJECT SITE SHALL BE CLEARED AND CLEANED OF DEBRIS PRIOR TO GRADING.
27. REMOVE VEGETATION, INCLUDING TREES WITHIN THE REMOVAL LIMITS, UNLESS OTHERWISE SPECIFIED ON DRAWINGS.
28. REMOVE WHEEL STOPS, AND GUARD POSTS WITHIN THE REMOVAL LIMITS, UNLESS OTHERWISE SPECIFIED ON DRAWINGS.
29. REMOVE WIRING IN CONDUITS ASSOCIATED WITH ITEMS REMOVED.
30. DEMOLISH AND REMOVE EXISTING BUILDING STRUCTURES COMPLETELY; INCLUDING FOUNDATION, FOOTINGS AND UTILITIES AS INDICATED ON DRAWINGS.
31. LIGHT POLE REMOVALS INCLUDE, BUT IS NOT LIMITED TO, STRUCTURE, FOUNDATION, AND SUPPORTS.
32. SAWCUT AND REMOVE ASPHALT CONCRETE PAVEMENT AS INDICATED, AND PROTECT REMAINING PORTION FROM SIGNIFICANT DAMAGE; CLEAN, PATCH, REPAIR, WHEN DEMOLITION IS COMPLETE.
33. PROPERLY CAP AND MONUMENT REMOVED UTILITIES, AT THEIR TERMINATION POINT, TO THE STANDARDS OF THE GOVERNING AGENCY OR COMPANY.
34. SUBMIT TO ENGINEER A DEMOLITION PLAN FOR THE REMOVAL OF STRUCTURES FOR APPROVAL.
35. PROVIDE AN 8-FOOT-HIGH CHAIN LINK FENCE TO PREVENT UNAUTHORIZED ENTRY TO THE VACANT LOT AFTER DEMOLITION.
36. PROVIDE POWER DURING CONSTRUCTION. DEPARTMENT IS NOT PROVIDING POWER TO PROJECT SITE DURING THE CONSTRUCTION PERIOD.

B. LADBS INSPECTION

1. CALL LADBS FOR BUILDING DEMOLITION INSPECTION AT (213) 473-3231. A CALL FOR INSPECTION MUST BE MADE AT LEAST 24 HOURS BEFORE WORK IS TO BE STARTED.
2. PROTECTION DEVICE INSPECTION: REQUIRED PROTECTION DEVICES MUST BE IN PLACE PRIOR TO STARTING ANY WORK.
3. FIELD CARD: THE "DEMOLITION INSPECTION RECORD" FORM NO. LADBS B-8B MUST BE POSTED ON PROJECT SITE. THIS CARD MUST BE SIGNED BY THE INSPECTOR APPROVING THE METHOD OF DEMOLITION TO BE USED BEFORE WORK IS STARTED. A SEPARATE APPROVAL SIGNATURE IS REQUIRED FOR EACH DEMOLITION METHOD USED. IF THE METHOD OF DEMOLITION IS TO BE CHANGED DURING THE COURSE OF PROJECT, THE INSPECTOR MUST BE CALLED AND A NEW APPROVAL SIGNATURE OBTAINED BEFORE THE NEW METHOD IS STARTED.
4. SEWER CAP INSPECTION: WHEN THE SEWER HAS BEEN CAPPED, IT SHALL NOT BE COVERED UNTIL AN INSPECTION HAS BEEN MADE BY LADBS. THE INSPECTION SHOULD BE REQUESTED AT LEAST 24 HOURS BEFORE THE INSPECTION IS NEEDED, CALL (213) 473-3231.

C. GENERAL DEMOLITION PROCEDURES

1. PROTECTION DEVICES: BARRICADES, PROTECTION FENCES, AND PROTECTION CANOPIES SHALL BE PROVIDED AND CONSTRUCTED IN CONFORMANCE WITH THE REQUIREMENTS OF SECTION 3306 OF LOS ANGELES BUILDING CODE.

   EXCEPTIONS: A PROTECTION CANOPY SHALL NOT BE REQUIRED WHERE THE ADJOINING PUBLIC WAY IS PARTIALLY CLOSED AND PROPERLY BARRICADED SO AS TO PROHIBIT PEDESTRIAN AND VEHICULAR TRAFFIC WITH THE REQUIRED CLEARANCE DURING THE ENTIRE DEMOLITION OPERATION.
2. HAND WRECKING: HAND WRECKING METHODS MAY BE USED ON ANY TYPE OF BUILDING, PROVIDED THE REQUIRED PROTECTION DEVICES ARE INSTALLED AND APPROVED. HAND WRECKING MAY INCLUDE THE USE OF ANY TYPE OF HAND TOOLS. THE USE OF SMALL WHEEL MOUNTED PNEUMATIC TOOLS SHALL BE PERMITTED IF FIRST APPROVED BY THE BUILDING INSPECTOR.
3. DOZER OR LOADER WRECKING: DOZER OR LOADER WRECKING SHALL NOT BE USED EXCEPT ON ONE- OR TWO-STORY BUILDINGS WITH A MAXIMUM WALL HEIGHT OF 24 FEET. THE BUILDING MUST BE LOCATED A MINIMUM DISTANCE FROM THE PUBLIC WAY AND ADJOINING PROPERTY AT LEAST EQUAL TO THE MAXIMUM WALL HEIGHT OF THE BUILDING.
4. CLAM SHELL WRECKING: CLAM SHELL WRECKING SHALL NOT BE USED UNLESS THE BUILDING IS LOCATED A DISTANCE FROM THE PUBLIC WAY AND ADJOINING PROPERTY WHICH IS AT LEAST EQUAL TO ONE-HALF THE MAXIMUM HEIGHT OF THE BUILDING. THE SEPARATION NEED NOT, HOWEVER, EXCEED TWICE THE MAXIMUM STORY HEIGHT OF THE BUILDING.
5. CABLE WRECKING: CABLE WRECKING SHALL INCLUDE WRECKING METHODS USING A CABLE, WHETHER APPLIED TO A SINGLE WALL OR TO AN ENTIRE BUILDING. CABLE WRECKING SHALL BE ALLOWED ONLY IN THOSE CASES WHERE THE BUILDING IS LOCATED A DISTANCE FROM THE PUBLIC WAY AND ADJOINING PROPERTY GREATER THAN ONE AND ONE-HALF TIMES THE MAXIMUM HEIGHT OF THE BUILDING. WHERE CABLE WRECKING IS TO BE USED ON A SINGLE WALL, THE CLEAR DISTANCE REQUIRED NEED NOT EXCEED TWICE THE HEIGHT OF THE WALL BEING DEMOLISHED. PRIOR TO ISSUANCE OF A PERMIT FOR CABLE WRECKING, A DETAILED DESCRIPTION OF THE METHOD AND SEQUENCE FOR DEMOLISHING THE BUILDING AND SAFETY PRECAUTIONS TO BE TAKEN SHALL BE SUBMITTED TO THE BUILDING DEPARTMENT FOR APPROVAL.
6. BALL WRECKING: BALL WRECKING SHALL NOT BE USED UNLESS THE BUILDING IS LOCATED A DISTANCE FROM THE PUBLIC WAY AND ADJOINING PROPERTY AT LEAST EQUAL TO ONE AND ONE-HALF TIMES THE MAXIMUM HEIGHT OF THE BUILDING. THE SEPARATION NEED NOT, HOWEVER, EXCEED 50 FEET, PRIOR TO ISSUANCE OF A PERMIT FOR BALL WRECKING, SHALL SUBMIT FOR APPROVAL TO BUILDING DEPARTMENT A DETAILED DESCRIPTION OF THE METHOD AND SEQUENCE FOR DEMOLISHING BUILDING AND SAFETY PRECAUTIONS TO BE TAKEN.
7. USE OF EXPLOSIVES: EXPLOSIVES SHALL NOT BE USED IN THE DEMOLITION OF A BUILDING WITHOUT THE SPECIFIC WRITTEN APPROVAL OF DEPARTMENT OF BUILDING AND SAFETY AND ENGINEER. NO APPROVAL BE GRANTED FOR THE USE OF EXPLOSIVES IN A MANNER WHICH WOULD VIOLATE INFORMATION BULLET P/BC 2008-020. NECESSARY PERMITS AND PROCEDURES APPROVALS MUST BE OBTAINED FROM THE FIRE DEPARTMENT PRIOR TO THE USE OF EXPLOSIVES.

D. DEVIATIONS PERMITTED

1. EQUIVALENT PROTECTION: DEVIATIONS FROM THE REQUIREMENTS SPECIFIED ABOVE FOR THE DEMOLITION OF BUILDINGS OR STRUCTURES MAY BE REQUESTED WHERE CONDITIONS WARRANT AND PROVIDED EQUIVALENT PROTECTION IS FURNISHED. THIS MODIFICATION OF REQUIREMENTS MUST BE WELL DETAILED AND REQUIRES AN APPROVAL IN WRITING FROM THE DEPARTMENT OF BUILDING AND SAFETY PRIOR TO COMMENCING ANY DEMOLITION WORK.
2. APPLICATION FOR MODIFICATION: BEFORE ANY REQUEST FOR DEVIATIONS CAN BE ACTED UPON, AN APPLICATION FOR MODIFICATION SHALL BE FILED WITH THE DEPARTMENT OF BUILDING AND SAFETY. THE APPLICATION SHALL BE ON A "REQUEST FOR MODIFICATION OF BUILDING ORDINANCES" FORM NO. LADBS COM 31. THE APPLICATION MUST BE ACCOMPANIED BY AN ADEQUATELY DETAILED DEMOLITION PLAN AND PROCEDURE OF DEMOLITION.

E. DANGEROUS CONDITIONS DURING DEMOLITION

1. SHOULD A DANGEROUS CONDITION DEVELOP DURING DEMOLITION OF A STRUCTURE, IMMEDIATELY BARRICADE THE DANGEROUS AREA, NOTIFY ENGINEER AND DEPARTMENT OF BUILDING AND SAFETY AND TAKE IMMEDIATE STEPS TO MINIMIZE THE HAZARD. NO FURTHER DEMOLITION WORK SHALL BE DONE UNTIL APPROVAL TO PROCEED IS GIVEN BY ENGINEER AND DEPARTMENT OF BUILDING AND SAFETY.

F. SOIL REMOVAL

1. REFER TO SOIL MANAGEMENT PLAN FOR SOIL REMOVAL.
2. SOIL REMOVED SHALL NOT BE REUSED. SOIL IS DESIGNATED AS NON-HAZARDOUS WASTE SOIL UNLESS NOTED OTHERWISE AS SHOWN IN REMOVAL SHEETS.

200' 0' 200' 400'
SCALE: 1" = 200'

NO.	DATE	DRAWN	REVISIONS -	CHK'D	APP'D
C	7/18/25	-	40% DESIGN		
D	9/19/25	-	80% DESIGN		

NOT FOR CONSTRUCTION

NO.	DATE	DRAWN	REVISIONS -	CHK'D	APP'D

80% DESIGN REVIEW
SEP 19 , 2025

Jacobs
2600 MICHELSON DRIVE, SUITE 500
IRVINE, CA 92612
T: (949) 224-7500
F: (949) 224-7501

REGISTERED PROFESSIONAL ENGINEER
MICHAEL S. MCAMIS
No. 60573
CIVIL
STATE OF CALIFORNIA

SCALE: 1"=200'
DRAWN: E. FLORES
CHECKED: G. NGUYEN
DESIGNED: S. MCAMIS
ENGINEER / ARCHITECT

TERMINAL ISLAND MARITIME SUPPORT FACILITY

REMOVAL KEY PLAN AND NOTES

THE PORT OF LOS ANGELES
ENGINEERING DIVISION
425 S. PALOS VERDES STREET SAN PEDRO CA 90731-3309

DRAWING NUMBER: 1-3513
SHEET NUMBER: R-01

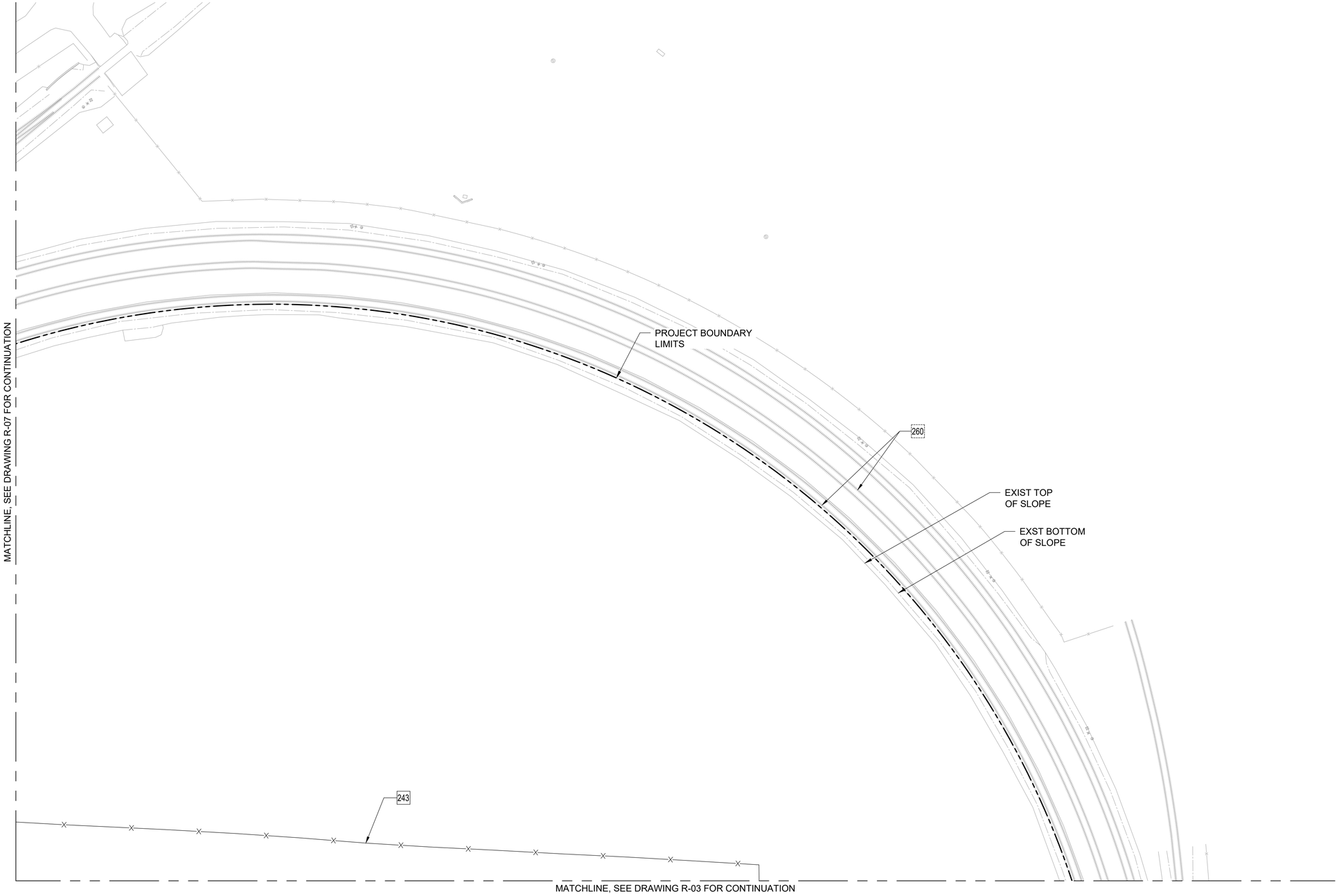

REMOVAL NOTES:

LEGEND OF CONSTRUCTION NOTES			
⬚ EXISTING/PROTECT		☐ REMOVE	
No.	CONSTRUCTION ITEM	QUANTITIES	REFERENCE DWG
1	CONCRETE CURB		
2	CURB AND GUTTER		
8	CONCRETE PAVEMENT	26832 SF	2R-12
12	CONCRETE WALK		
14	ASPHALT CONCRETE PAVEMENT	4522 SF	
16	CRUSHED MISC BASE (CMB)		3R-12, 4R-12
17	MAINTENANCE HOLE		
20	TREE		
32	BOLLARD	25 EA	
36	UTILITY POLE		
41	FIRE HYDRANT	1 EA	
47	SIGN		
61	UTILITY VAULT		
74	HEIGHT LIMIT STEEL BEAM STRUCTURE		
75	RETAINING WALL		
76	TUNNEL		
77	BUILDING STRUCTURE	310 SF	2R-12
82	STORM DRAIN MANHOLE JM	1 EA	
96	INFILTRATION BASIN	70764 CF	4R-12
100	TRENCH DRAIN		
130	STORM DRAIN LIFT STATION		
243	CHAIN LINK FENCING WITH BARBED WIRE	1838 LF	1R-12
244	CHAIN LINK FENCING ON K-RAIL		
245	CHAIN LINK FENCING ON K-RAIL WITH BARBED WIRE	5377 LF	3R-12
246	K-RAIL	7594 LF	1R-12, 2R-12, 4R-12
256	R/R SIGNAL EQUIPMENT AND FOUNDATION		
257	RAILROAD EQUIPMENT		
260	RAILROAD TRACK, BALLAST, SUB BALLAST, AND TIES	209 SF	

LEGEND:

◇ COORDINATE POINT

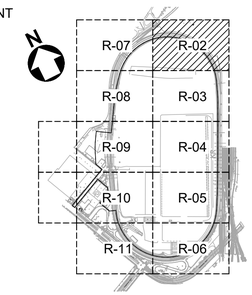

KEY MAP

40' 0' 40' 80'

SCALE: 1" = 40'

1R-02 / R-02 REMOVAL PLAN - AREA 1

SCALE: 1" = 40'

N

NO.	DATE	DRAWN	REVISIONS -	CHK'D	APP'D
C	7/18/25	-	40% DESIGN		
D	9/19/25	-	80% DESIGN		

NOT FOR CONSTRUCTION

NO.	DATE	DRAWN	REVISIONS -	CHK'D	APP'D

80% DESIGN REVIEW SEP 19 , 2025

Jacobs
2900 MICHELSON DRIVE, SUITE 500
IRVINE, CA 92612
T: (949) 224-7500
F: (949) 224-7501

REGISTERED PROFESSIONAL ENGINEER — MICHAEL S. MCAMIS — No. 60573 — CIVIL — STATE OF CALIFORNIA

SCALE: 1"=40'
DRAWN: E. FLORES
CHECKED: G. NGUYEN
DESIGNED: S. MCAMIS
ENGINEER / ARCHITECT

TERMINAL ISLAND MARITIME SUPPORT FACILITY

REMOVAL PLAN - AREA 1

THE PORT OF LOS ANGELES
ENGINEERING DIVISION
425 S. PALOS VERDES STREET SAN PEDRO CA 90731-3309

DRAWING NUMBER 1-3513

SHEET NUMBER R-02

POLAPRDY_04/2023_BW'D'

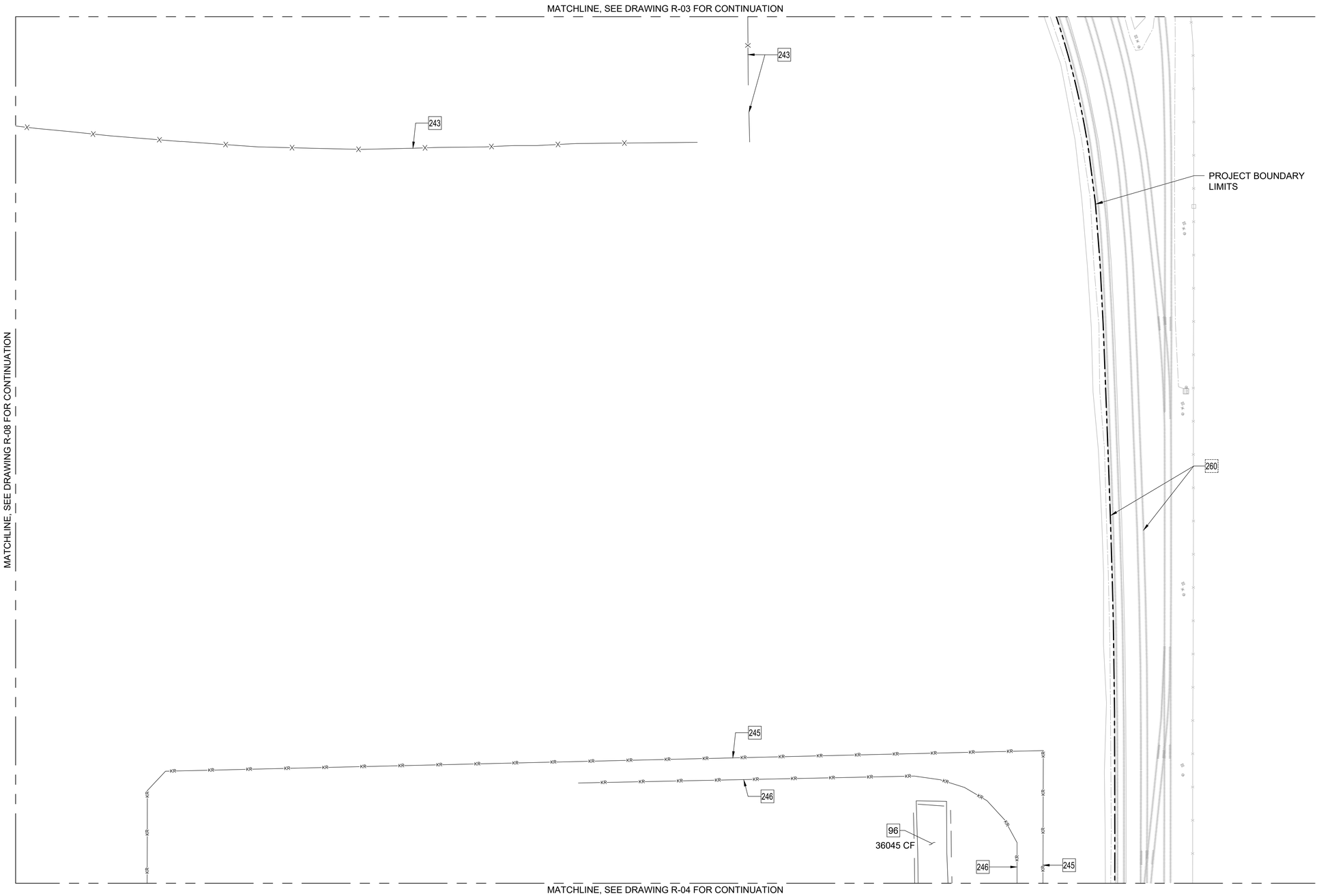

REMOVAL NOTES:

LEGEND OF CONSTRUCTION NOTES

EXISTING/PROTECT REMOVE

No.	CONSTRUCTION ITEM	QUANTITIES	REFERENCE DWG
1	CONCRETE CURB		
2	CURB AND GUTTER		
8	CONCRETE PAVEMENT	26832 SF	2R-12
12	CONCRETE WALK		
14	ASPHALT CONCRETE PAVEMENT	4522 SF	
16	CRUSHED MISC BASE (CMB)		3R-12, 4R-12
17	MAINTENANCE HOLE		
20	TREE		
32	BOLLARD	25 EA	
36	UTILITY POLE		
41	FIRE HYDRANT	1 EA	
47	SIGN		
61	UTILITY VAULT		
74	HEIGHT LIMIT STEEL BEAM STRUCTURE		
75	RETAINING WALL		
76	TUNNEL		
77	BUILDING STRUCTURE	310 SF	2R-12
82	STORM DRAIN MANHOLE JM	1 EA	
96	INFILTRATION BASIN	70764 CF	4R-12
100	TRENCH DRAIN		
130	STORM DRAIN LIFT STATION		
243	CHAIN LINK FENCING WITH BARBED WIRE	1838 LF	1R-12
244	CHAIN LINK FENCING ON K-RAIL		
245	CHAIN LINK FENCING ON K-RAIL WITH BARBED WIRE	5377 LF	3R-12
246	K-RAIL	7594 LF	1R-12, 2R-12, 4R-12
256	R/R SIGNAL EQUIPMENT AND FOUNDATION		
257	RAILROAD EQUIPMENT		
260	RAILROAD TRACK, BALLAST, SUB BALLAST, AND TIES	209 SF	

LEGEND:

COORDINATE POINT

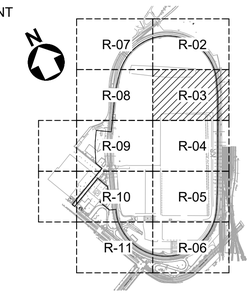

KEY MAP

40' 0' 40' 80'

SCALE: 1" = 40'

1R-03 / R-03 REMOVAL PLAN - AREA 2

SCALE: 1" = 40'

NO.	DATE	DRAWN	REVISIONS -	CHK'D	APP'D
C	7/18/25	-	40% DESIGN		
D	9/19/25	-	80% DESIGN		

NOT FOR CONSTRUCTION

NO.	DATE	DRAWN	REVISIONS -	CHK'D	APP'D
			80% DESIGN REVIEW SEP 19 , 2025		

Jacobs
2600 MICHELSON DRIVE, SUITE 500
IRVINE, CA 92612
T: (949) 224-7500
F: (949) 224-7501

REGISTERED PROFESSIONAL ENGINEER — MICHAEL S. MCAMIS — No. 60573 — CIVIL — STATE OF CALIFORNIA

SCALE: 1"=40'
DRAWN: E. FLORES
CHECKED: G. NGUYEN
DESIGNED: S. MCAMIS
ENGINEER / ARCHITECT

TERMINAL ISLAND MARITIME SUPPORT FACILITY

REMOVAL PLAN - AREA 2

THE PORT OF LOS ANGELES
ENGINEERING DIVISION
425 S. PALOS VERDES STREET SAN PEDRO CA 90731-3309

DRAWING NUMBER: 1-3513
SHEET NUMBER: R-03

MATCHLINE, SEE DRAWING R-03 FOR CONTINUATION

MATCHLINE, SEE DRAWING R-09 FOR CONTINUATION

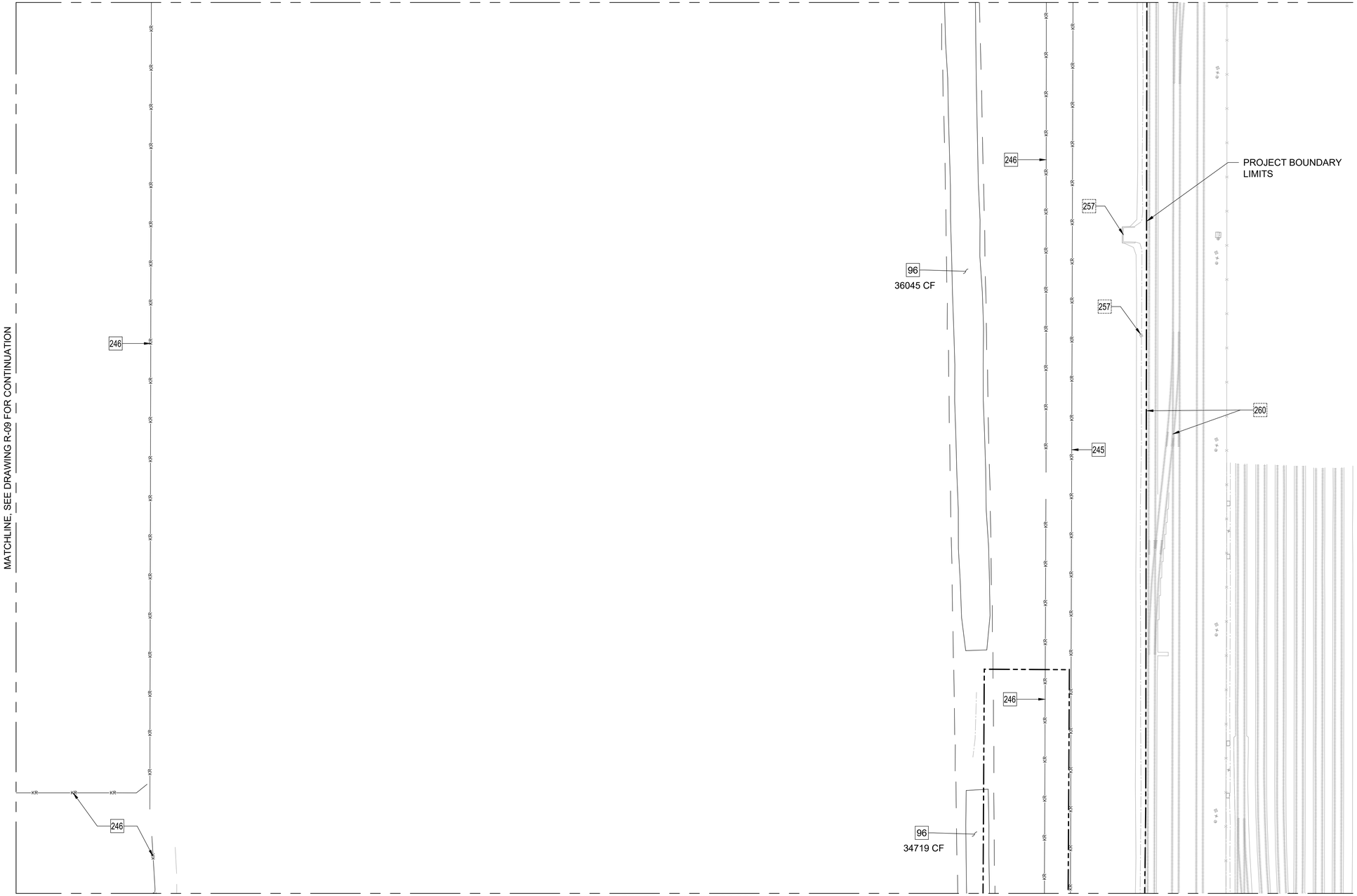

MATCHLINE, SEE DRAWING R-05 FOR CONTINUATION

REMOVAL NOTES:

LEGEND OF CONSTRUCTION NOTES			
⬚ EXISTING/PROTECT		☐ REMOVE	
No.	CONSTRUCTION ITEM	QUANTITIES	REFERENCE DWG
1	CONCRETE CURB		
2	CURB AND GUTTER		
8	CONCRETE PAVEMENT	26832 SF	2R-12
12	CONCRETE WALK		
14	ASPHALT CONCRETE PAVEMENT	4522 SF	
16	CRUSHED MISC BASE (CMB)		3R-12, 4R-12
17	MAINTENANCE HOLE		
20	TREE		
32	BOLLARD	25 EA	
36	UTILITY POLE		
41	FIRE HYDRANT	1 EA	
47	SIGN		
61	UTILITY VAULT		
74	HEIGHT LIMIT STEEL BEAM STRUCTURE		
75	RETAINING WALL		
76	TUNNEL		
77	BUILDING STRUCTURE	310 SF	2R-12
82	STORM DRAIN MANHOLE JM	1 EA	
96	INFILTRATION BASIN	70764 CF	4R-12
100	TRENCH DRAIN		
130	STORM DRAIN LIFT STATION		
243	CHAIN LINK FENCING WITH BARBED WIRE	1838 LF	1R-12
244	CHAIN LINK FENCING ON K-RAIL		
245	CHAIN LINK FENCING ON K-RAIL WITH BARBED WIRE	5377 LF	3R-12
246	K-RAIL	7594 LF	1R-12, 2R-12, 4R-12
256	R/R SIGNAL EQUIPMENT AND FOUNDATION		
257	RAILROAD EQUIPMENT		
260	RAILROAD TRACK, BALLAST, SUB BALLAST, AND TIES	209 SF	

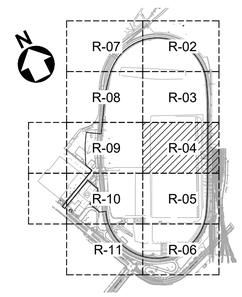

KEY MAP

40' 0' 40' 80'

SCALE: 1" = 40'

1R-04 / R-04 REMOVAL PLAN - AREA 3

SCALE: 1" = 40'

N

NO.	DATE	DRAWN	REVISIONS -	CHK'D	APP'D
C	7/18/25	-	40% DESIGN		
D	9/19/25	-	80% DESIGN		

NOT FOR CONSTRUCTION

NO.	DATE	DRAWN	REVISIONS -	CHK'D	APP'D
			80% DESIGN REVIEW SEP 19 , 2025		

Jacobs
2600 MICHELSON DRIVE, SUITE 500
IRVINE, CA 92612
T: (949) 224-7500
F: (949) 224-7501

REGISTERED PROFESSIONAL ENGINEER — MICHAEL S. McAMIS — No. 60573 — CIVIL — STATE OF CALIFORNIA

SCALE: 1"=40'
DRAWN: E. FLORES
CHECKED: G. NGUYEN
DESIGNED: S. MCAMIS
ENGINEER / ARCHITECT

TERMINAL ISLAND MARITIME SUPPORT FACILITY

REMOVAL PLAN - AREA 3

THE PORT OF LOS ANGELES
ENGINEERING DIVISION
425 S. PALOS VERDES STREET SAN PEDRO CA 90731-3309

DRAWING NUMBER: 1-3513
SHEET NUMBER: R-04

POLAPRO1_04/2023_BWD

MATCHLINE, SEE DRAWING R-04 FOR CONTINUATION

MATCHLINE, SEE DRAWING R-10 FOR CONTINUATION

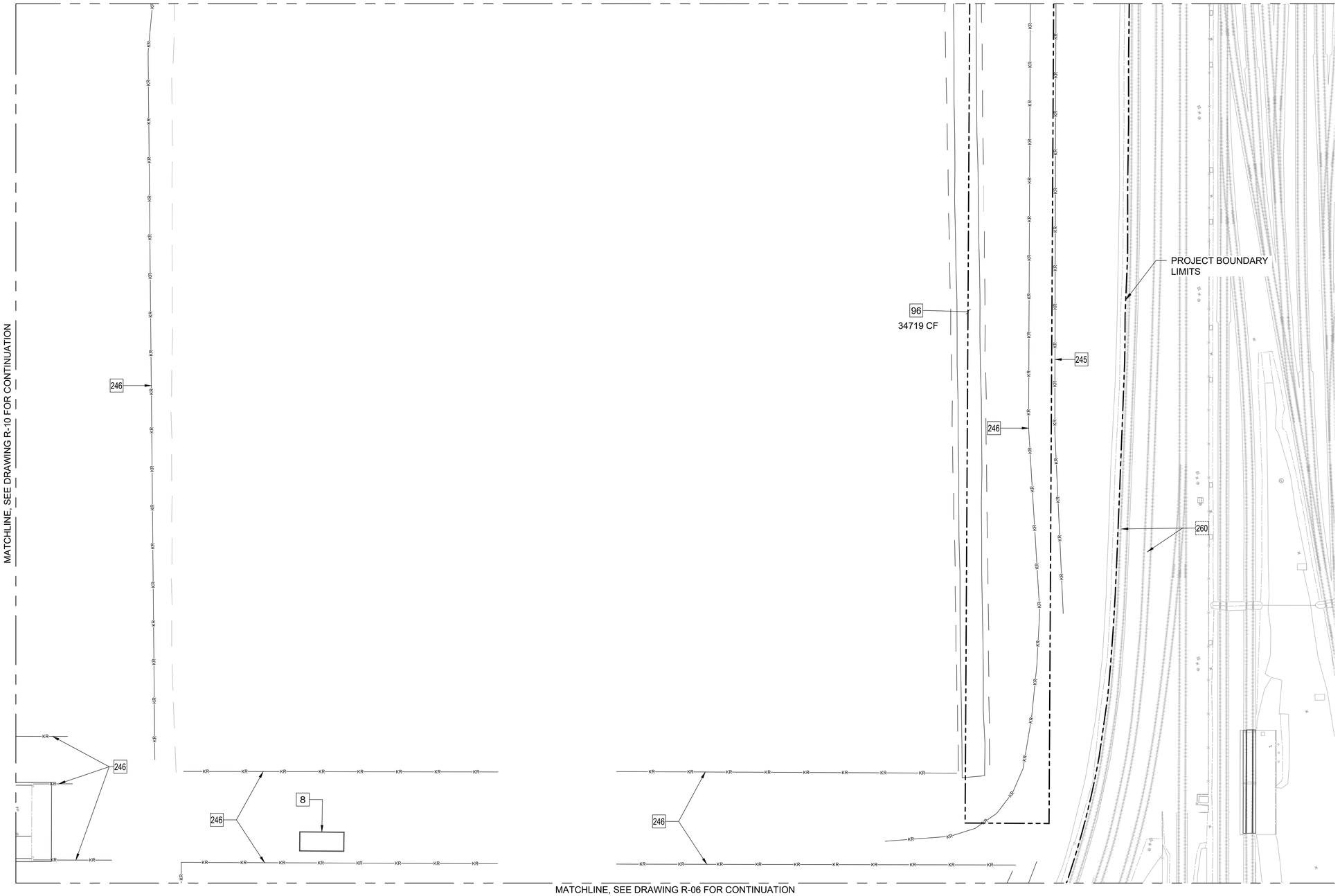

MATCHLINE, SEE DRAWING R-06 FOR CONTINUATION

REMOVAL NOTES:

LEGEND OF CONSTRUCTION NOTES

EXISTING/PROTECT REMOVE

No.	CONSTRUCTION ITEM	QUANTITIES	REFERENCE DWG
1	CONCRETE CURB		
2	CURB AND GUTTER		
8	CONCRETE PAVEMENT	26832 SF	2R-12
12	CONCRETE WALK		
14	ASPHALT CONCRETE PAVEMENT	4522 SF	
16	CRUSHED MISC BASE (CMB)		3R-12, 4R-12
17	MAINTENANCE HOLE		
20	TREE		
32	BOLLARD	25 EA	
36	UTILITY POLE		
41	FIRE HYDRANT	1 EA	
47	SIGN		
61	UTILITY VAULT		
74	HEIGHT LIMIT STEEL BEAM STRUCTURE		
75	RETAINING WALL		
76	TUNNEL		
77	BUILDING STRUCTURE	310 SF	2R-12
82	STORM DRAIN MANHOLE JM	1 EA	
96	INFILTRATION BASIN	70764 CF	4R-12
100	TRENCH DRAIN		
130	STORM DRAIN LIFT STATION		
243	CHAIN LINK FENCING WITH BARBED WIRE	1838 LF	1R-12
244	CHAIN LINK FENCING ON K-RAIL		
245	CHAIN LINK FENCING ON K-RAIL WITH BARBED WIRE	5377 LF	3R-12
246	K-RAIL	7594 LF	1R-12, 2R-12, 4R-12
256	R/R SIGNAL EQUIPMENT AND FOUNDATION		
257	RAILROAD EQUIPMENT		
260	RAILROAD TRACK, BALLAST, SUB BALLAST, AND TIES	209 SF	

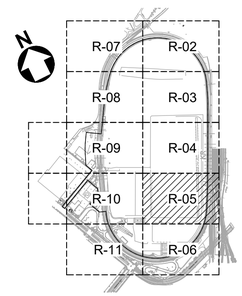

KEY MAP

40' 0' 40' 80'

SCALE: 1" = 40'

1R-05 / R-05 REMOVAL PLAN - AREA 4

SCALE: 1" = 40'

N

NO.	DATE	DRAWN	REVISIONS -	CHK'D	APP'D
C	7/18/25	-	40% DESIGN		
D	9/19/25	-	80% DESIGN		

NOT FOR CONSTRUCTION

NO.	DATE	DRAWN	REVISIONS -	CHK'D	APP'D

80% DESIGN REVIEW SEP 19 , 2025

Jacobs
2600 MICHELSON DRIVE, SUITE 500
IRVINE, CA 92612
T: (949) 224-7500
F: (949) 224-7501

REGISTERED PROFESSIONAL ENGINEER — MICHAEL S. MCAMIS — No. 60573 — CIVIL — STATE OF CALIFORNIA

SCALE: 1"=40'
DRAWN: E. FLORES
CHECKED: G. NGUYEN
DESIGNED: S. MCAMIS
ENGINEER / ARCHITECT

TERMINAL ISLAND MARITIME SUPPORT FACILITY

REMOVAL PLAN - AREA 4

THE PORT OF LOS ANGELES
ENGINEERING DIVISION
425 S. PALOS VERDES STREET SAN PEDRO CA 90731-3309

DRAWING NUMBER: 1-3513
SHEET NUMBER: R-05

PDLAPRD1_04/2023_BWD

MATCHLINE, SEE DRAWING R-05 FOR CONTINUATION

MATCHLINE, SEE DRAWING R-11 FOR CONTINUATION

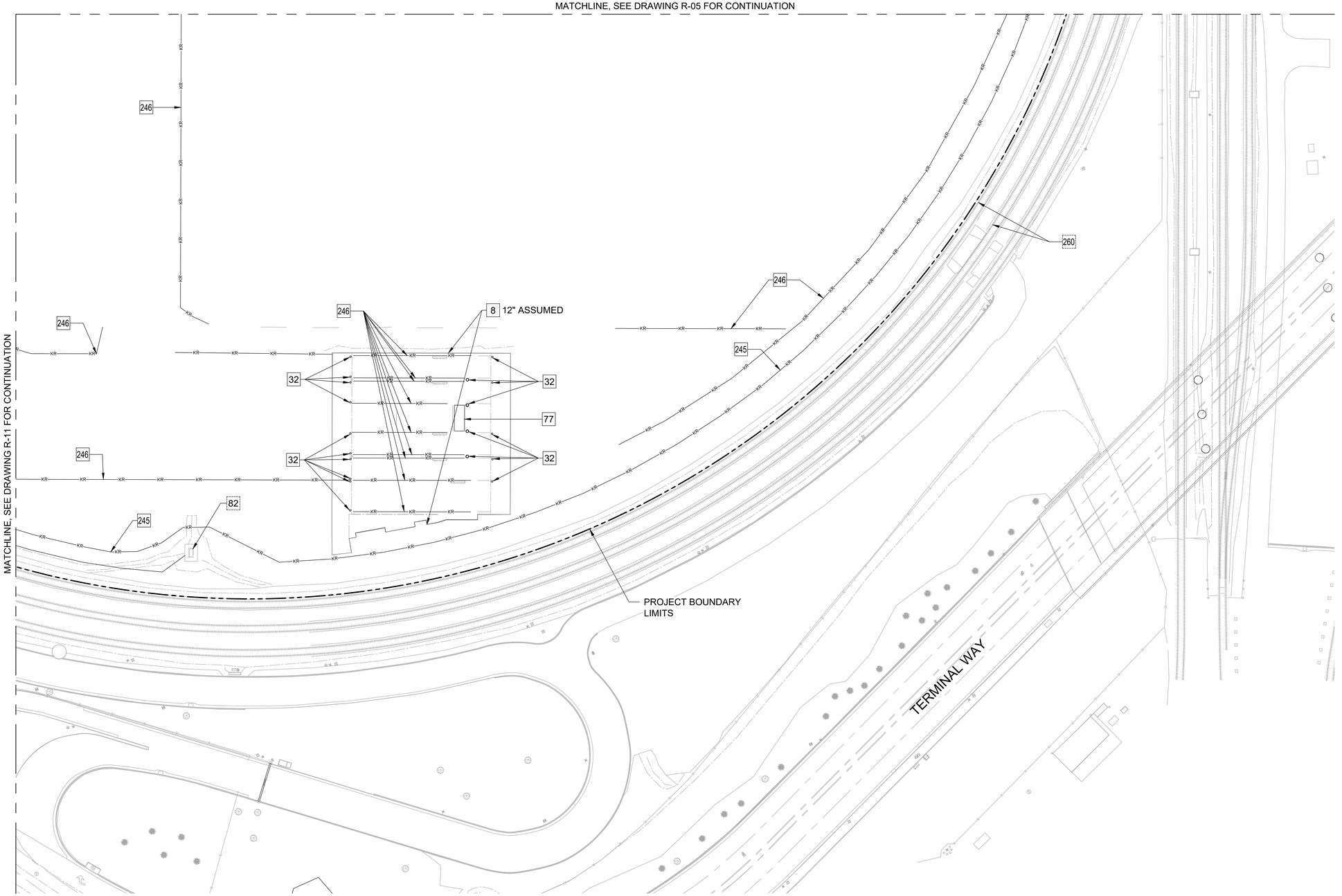

REMOVAL NOTES:

LEGEND OF CONSTRUCTION NOTES

EXISTING/PROTECT REMOVE

No.	CONSTRUCTION ITEM	QUANTITIES	REFERENCE DWG
1	CONCRETE CURB		
2	CURB AND GUTTER		
8	CONCRETE PAVEMENT	26832 SF	2R-12
12	CONCRETE WALK		
14	ASPHALT CONCRETE PAVEMENT	4522 SF	
16	CRUSHED MISC BASE (CMB)		3R-12, 4R-12
17	MAINTENANCE HOLE		
20	TREE		
32	BOLLARD	25 EA	
36	UTILITY POLE		
41	FIRE HYDRANT	1 EA	
47	SIGN		
61	UTILITY VAULT		
74	HEIGHT LIMIT STEEL BEAM STRUCTURE		
75	RETAINING WALL		
76	TUNNEL		
77	BUILDING STRUCTURE	310 SF	2R-12
82	STORM DRAIN MANHOLE JM	1 EA	
96	INFILTRATION BASIN	70764 CF	4R-12
100	TRENCH DRAIN		
130	STORM DRAIN LIFT STATION		
243	CHAIN LINK FENCING WITH BARBED WIRE	1838 LF	1R-12
244	CHAIN LINK FENCING ON K-RAIL		
245	CHAIN LINK FENCING ON K-RAIL WITH BARBED WIRE	5377 LF	3R-12
246	K-RAIL	7594 LF	1R-12, 2R-12, 4R-12
256	R/R SIGNAL EQUIPMENT AND FOUNDATION		
257	RAILROAD EQUIPMENT		
260	RAILROAD TRACK, BALLAST, SUB BALLAST, AND TIES	209 SF	

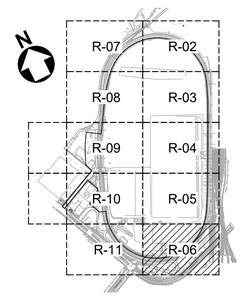

KEY MAP

40' 0' 40' 80'

SCALE: 1" = 40'

1R-06 / R-06 REMOVAL PLAN - AREA 5

SCALE: 1" = 40'

N

NO.	DATE	DRAWN	REVISIONS -	CHK'D	APP'D
C	7/18/25	-	40% DESIGN		
D	9/19/25	-	80% DESIGN		

NOT FOR CONSTRUCTION

NO.	DATE	DRAWN	REVISIONS -	CHK'D	APP'D
			80% DESIGN REVIEW SEP 19 , 2025		

Jacobs
2600 MICHELSON DRIVE, SUITE 500
IRVINE, CA 92612
T: (949) 224-7500
F: (949) 224-7501

REGISTERED PROFESSIONAL ENGINEER — MICHAEL S. McAMIS — No. 60573 — CIVIL — STATE OF CALIFORNIA

SCALE: 1"=40'
DRAWN: E. FLORES
CHECKED: G. NGUYEN
DESIGNED: S. MCAMIS
ENGINEER / ARCHITECT

TERMINAL ISLAND MARITIME SUPPORT FACILITY

REMOVAL PLAN - AREA 5

THE PORT OF LOS ANGELES
ENGINEERING DIVISION
425 S. PALOS VERDES STREET SAN PEDRO CA 90731-3309

DRAWING NUMBER: 1-3513
SHEET NUMBER: R-06

POLAPR01_042023_BWD

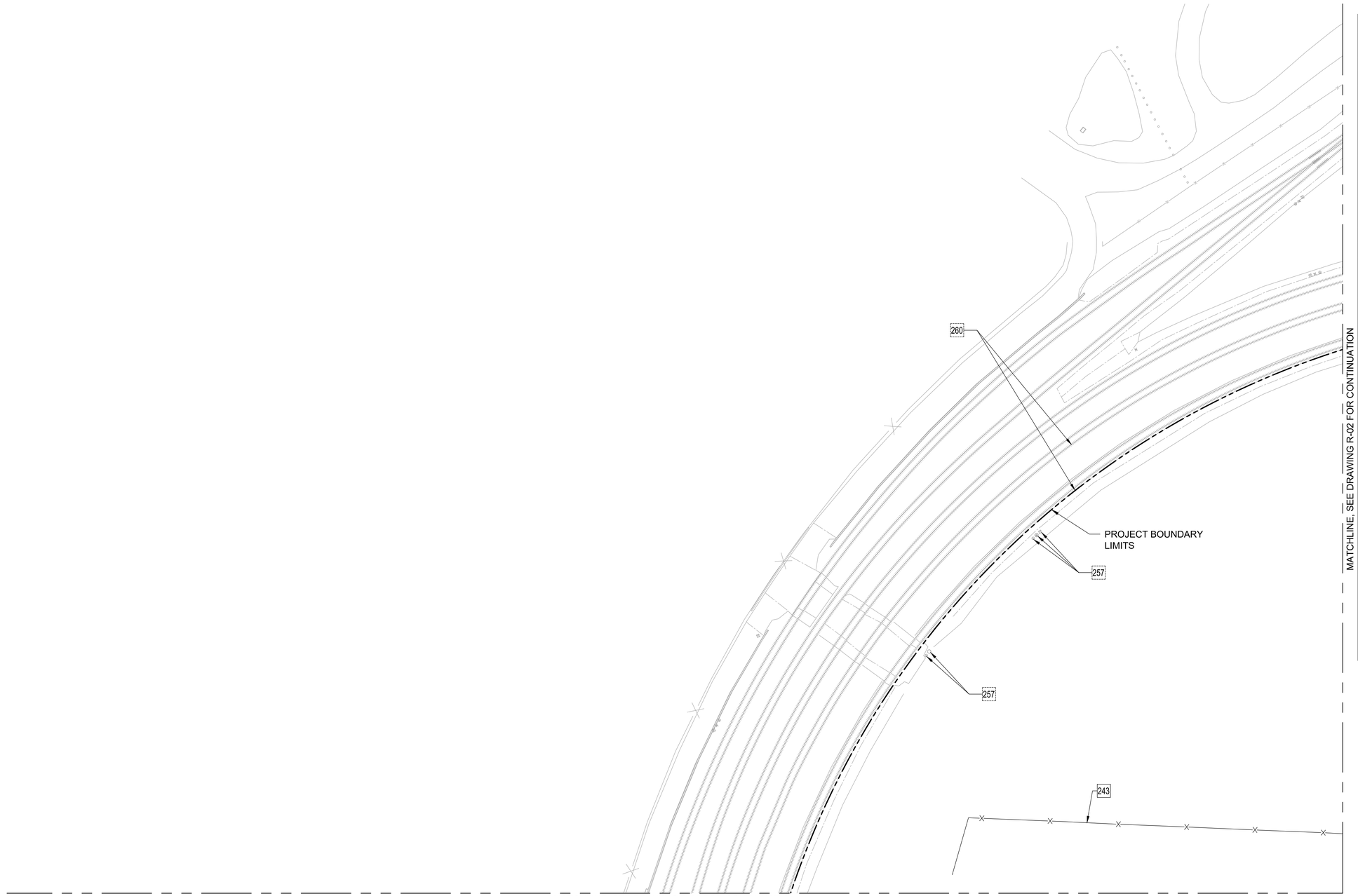

REMOVAL NOTES:

LEGEND OF CONSTRUCTION NOTES			
⬚ EXISTING/PROTECT		☐ REMOVE	
No.	CONSTRUCTION ITEM	QUANTITIES	REFERENCE DWG
1	CONCRETE CURB		
2	CURB AND GUTTER		
8	CONCRETE PAVEMENT	26832 SF	2R-12
12	CONCRETE WALK		
14	ASPHALT CONCRETE PAVEMENT	4522 SF	
16	CRUSHED MISC BASE (CMB)		3R-12, 4R-12
17	MAINTENANCE HOLE		
20	TREE		
32	BOLLARD	25 EA	
36	UTILITY POLE		
41	FIRE HYDRANT	1 EA	
47	SIGN		
61	UTILITY VAULT		
74	HEIGHT LIMIT STEEL BEAM STRUCTURE		
75	RETAINING WALL		
76	TUNNEL		
77	BUILDING STRUCTURE	310 SF	2R-12
82	STORM DRAIN MANHOLE JM	1 EA	
96	INFILTRATION BASIN	70764 CF	4R-12
100	TRENCH DRAIN		
130	STORM DRAIN LIFT STATION		
243	CHAIN LINK FENCING WITH BARBED WIRE	1838 LF	1R-12
244	CHAIN LINK FENCING ON K-RAIL		
245	CHAIN LINK FENCING ON K-RAIL WITH BARBED WIRE	5377 LF	3R-12
246	K-RAIL	7594 LF	1R-12, 2R-12, 4R-12
256	R/R SIGNAL EQUIPMENT AND FOUNDATION		
257	RAILROAD EQUIPMENT		
260	RAILROAD TRACK, BALLAST, SUB BALLAST, AND TIES	209 SF	

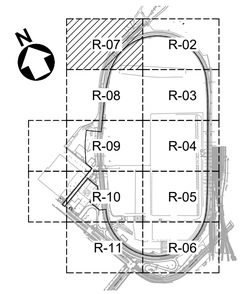

KEY MAP

40' 0' 40' 80'

SCALE: 1" = 40'

1R-07
R-07

REMOVAL PLAN - AREA 6

SCALE: 1" = 40'

N

NO.	DATE	DRAWN	REVISIONS -	CHK'D	APP'D
C	7/18/25	-	40% DESIGN		
D	9/19/25	-	80% DESIGN		

NOT FOR CONSTRUCTION

NO.	DATE	DRAWN	REVISIONS -	CHK'D	APP'D
			80% DESIGN REVIEW SEP 19 , 2025		

Jacobs
2600 MICHELSON DRIVE, SUITE 500
IRVINE, CA 92612
T: (949) 224-7500
F: (949) 224-7501

REGISTERED PROFESSIONAL ENGINEER
MICHAEL S. McAMIS
No. 60573
CIVIL
STATE OF CALIFORNIA

SCALE: 1"=40'
DRAWN: E. FLORES
CHECKED: G. NGUYEN
DESIGNED: S. MCAMIS
ENGINEER / ARCHITECT

TERMINAL ISLAND MARITIME SUPPORT FACILITY

REMOVAL PLAN - AREA 6

THE PORT OF LOS ANGELES
ENGINEERING DIVISION
425 S. PALOS VERDES STREET SAN PEDRO CA 90731-3309

DRAWING NUMBER: 1-3513
SHEET NUMBER: R-07

POLAPRD1_040223_BWD

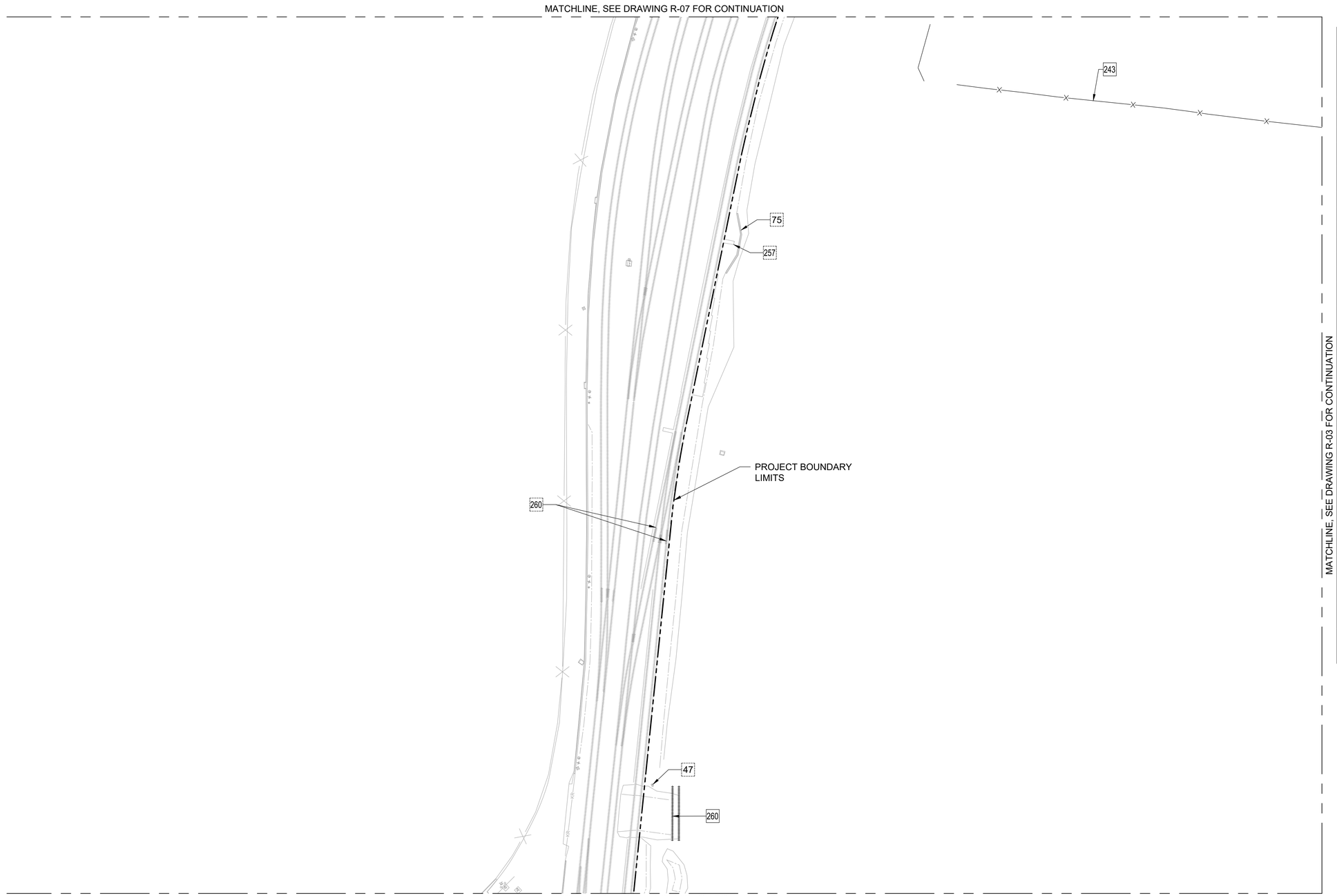

REMOVAL NOTES:

LEGEND OF CONSTRUCTION NOTES

EXISTING/PROTECT REMOVE

No.	CONSTRUCTION ITEM	QUANTITIES	REFERENCE DWG
1	CONCRETE CURB		
2	CURB AND GUTTER		
8	CONCRETE PAVEMENT	26832 SF	2R-12
12	CONCRETE WALK		
14	ASPHALT CONCRETE PAVEMENT	4522 SF	
16	CRUSHED MISC BASE (CMB)		3R-12, 4R-12
17	MAINTENANCE HOLE		
20	TREE		
32	BOLLARD	25 EA	
36	UTILITY POLE		
41	FIRE HYDRANT	1 EA	
47	SIGN		
61	UTILITY VAULT		
74	HEIGHT LIMIT STEEL BEAM STRUCTURE		
75	RETAINING WALL		
76	TUNNEL		
77	BUILDING STRUCTURE	310 SF	2R-12
82	STORM DRAIN MANHOLE JM	1 EA	
96	INFILTRATION BASIN	70764 CF	4R-12
100	TRENCH DRAIN		
130	STORM DRAIN LIFT STATION		
243	CHAIN LINK FENCING WITH BARBED WIRE	1838 LF	1R-12
244	CHAIN LINK FENCING ON K-RAIL		
245	CHAIN LINK FENCING ON K-RAIL WITH BARBED WIRE	5377 LF	3R-12
246	K-RAIL	7594 LF	1R-12, 2R-12, 4R-12
256	R/R SIGNAL EQUIPMENT AND FOUNDATION		
257	RAILROAD EQUIPMENT		
260	RAILROAD TRACK, BALLAST, SUB BALLAST, AND TIES	209 SF	

MATCHLINE, SEE DRAWING R-03 FOR CONTINUATION

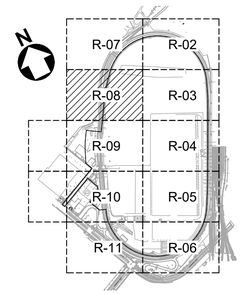

KEY MAP

40' 0' 40' 80'

SCALE: 1" = 40'

1R-08 / R-08 REMOVAL PLAN - AREA 7

SCALE: 1" = 40'

N

NO.	DATE	DRAWN	REVISIONS -	CHK'D	APP'D
C	7/18/25	-	40% DESIGN		
D	9/19/25	-	80% DESIGN		

NOT FOR CONSTRUCTION

NO.	DATE	DRAWN	REVISIONS -	CHK'D	APP'D
			80% DESIGN REVIEW SEP 19 , 2025		

Jacobs
2600 MICHELSON DRIVE, SUITE 500
IRVINE, CA 92612
T: (949) 224-7500
F: (949) 224-7501

REGISTERED PROFESSIONAL ENGINEER — MICHAEL S. McAMIS — No. 60573 — CIVIL — STATE OF CALIFORNIA

SCALE: 1"=40'
DRAWN: E. FLORES
CHECKED: G. NGUYEN
DESIGNED: S. MCAMIS
ENGINEER / ARCHITECT

TERMINAL ISLAND MARITIME SUPPORT FACILITY

REMOVAL PLAN - AREA 7

THE PORT OF LOS ANGELES
ENGINEERING DIVISION
425 S. PALOS VERDES STREET SAN PEDRO CA 90731-3309

DRAWING NUMBER: 1-3513
SHEET NUMBER: R-08

POLAPRD1_040223_BWD

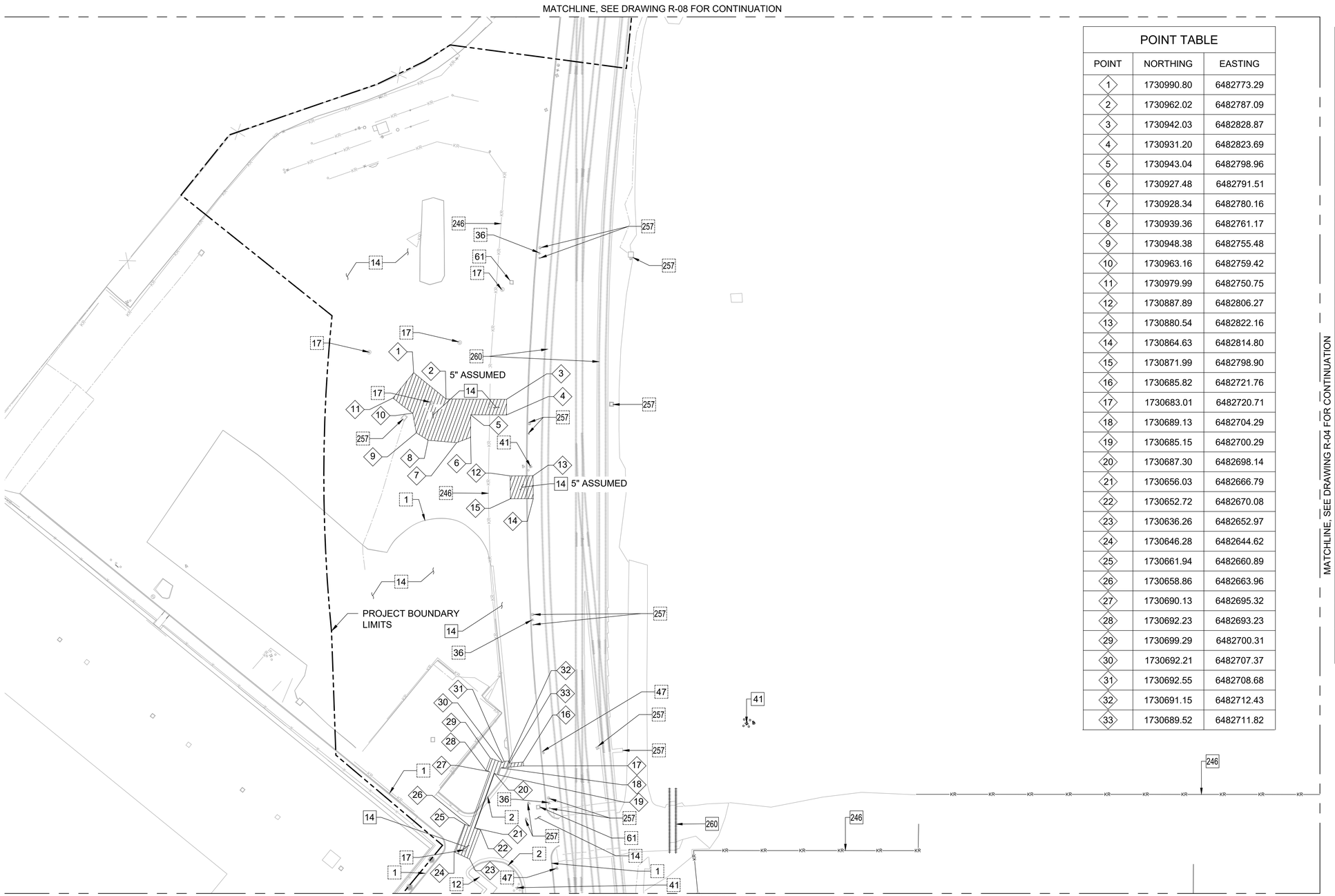

POINT TABLE

POINT	NORTHING	EASTING
1	1730990.80	6482773.29
2	1730962.02	6482787.09
3	1730942.03	6482828.87
4	1730931.20	6482823.69
5	1730943.04	6482798.96
6	1730927.48	6482791.51
7	1730928.34	6482780.16
8	1730939.36	6482761.17
9	1730948.38	6482755.48
10	1730963.16	6482759.42
11	1730979.99	6482750.75
12	1730887.89	6482806.27
13	1730880.54	6482822.16
14	1730864.63	6482814.80
15	1730871.99	6482798.90
16	1730685.82	6482721.76
17	1730683.01	6482720.71
18	1730689.13	6482704.29
19	1730685.15	6482700.29
20	1730687.30	6482698.14
21	1730656.03	6482666.79
22	1730652.72	6482670.08
23	1730636.26	6482652.97
24	1730646.28	6482644.62
25	1730661.94	6482660.89
26	1730658.86	6482663.96
27	1730690.13	6482695.32
28	1730692.23	6482693.23
29	1730699.29	6482700.31
30	1730692.21	6482707.37
31	1730692.55	6482708.68
32	1730691.15	6482712.43
33	1730689.52	6482711.82

REMOVAL NOTES:

LEGEND OF CONSTRUCTION NOTES

EXISTING/PROTECT REMOVE

No.	CONSTRUCTION ITEM	QUANTITIES	REFERENCE DWG
1	CONCRETE CURB		
2	CURB AND GUTTER		
8	CONCRETE PAVEMENT	26832 SF	2R-12
12	CONCRETE WALK		
14	ASPHALT CONCRETE PAVEMENT	4522 SF	
16	CRUSHED MISC BASE (CMB)		3R-12, 4R-12
17	MAINTENANCE HOLE		
20	TREE		
32	BOLLARD	25 EA	
36	UTILITY POLE		
41	FIRE HYDRANT	1 EA	
47	SIGN		
61	UTILITY VAULT		
74	HEIGHT LIMIT STEEL BEAM STRUCTURE		
75	RETAINING WALL		
76	TUNNEL		
77	BUILDING STRUCTURE	310 SF	2R-12
82	STORM DRAIN MANHOLE JM	1 EA	
96	INFILTRATION BASIN	70764 CF	4R-12
100	TRENCH DRAIN		
130	STORM DRAIN LIFT STATION		
243	CHAIN LINK FENCING WITH BARBED WIRE	1838 LF	1R-12
244	CHAIN LINK FENCING ON K-RAIL		
245	CHAIN LINK FENCING ON K-RAIL WITH BARBED WIRE	5377 LF	3R-12
246	K-RAIL	7594 LF	1R-12, 2R-12, 4R-12
256	R/R SIGNAL EQUIPMENT AND FOUNDATION		
257	RAILROAD EQUIPMENT		
260	RAILROAD TRACK, BALLAST, SUB BALLAST, AND TIES	209 SF	

MATCHLINE, SEE DRAWING R-04 FOR CONTINUATION

LEGEND:

COORDINATE POINT

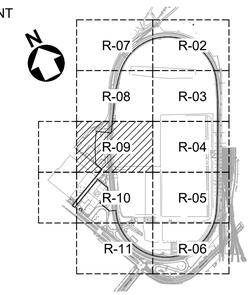

KEY MAP

40' 0' 40' 80'

SCALE: 1" = 40'

1R-09 / R-09 REMOVAL PLAN - AREA 8

SCALE: 1" = 40'

NO.	DATE	DRAWN	REVISIONS -	CHK'D	APP'D
C	7/18/25	-	40% DESIGN		
D	9/19/25	-	80% DESIGN		

NOT FOR CONSTRUCTION

NO.	DATE	DRAWN	REVISIONS -	CHK'D	APP'D

80% DESIGN REVIEW SEP 19 , 2025

Jacobs
2600 MICHELSON DRIVE, SUITE 500
IRVINE, CA 92612
T: (949) 224-7500
F: (949) 224-7501

REGISTERED PROFESSIONAL ENGINEER — MICHAEL S. McAMIS — No. 60573 — CIVIL — STATE OF CALIFORNIA

SCALE:	1"=40'
DRAWN:	E. FLORES
CHECKED:	G. NGUYEN
DESIGNED:	S. MCAMIS
	ENGINEER / ARCHITECT

TERMINAL ISLAND MARITIME SUPPORT FACILITY

REMOVAL PLAN - AREA 8

THE PORT OF LOS ANGELES
ENGINEERING DIVISION
425 S. PALOS VERDES STREET SAN PEDRO CA 90731-3309

DRAWING NUMBER 1-3513

SHEET NUMBER R-09

POLAPRO1_042023_BWD

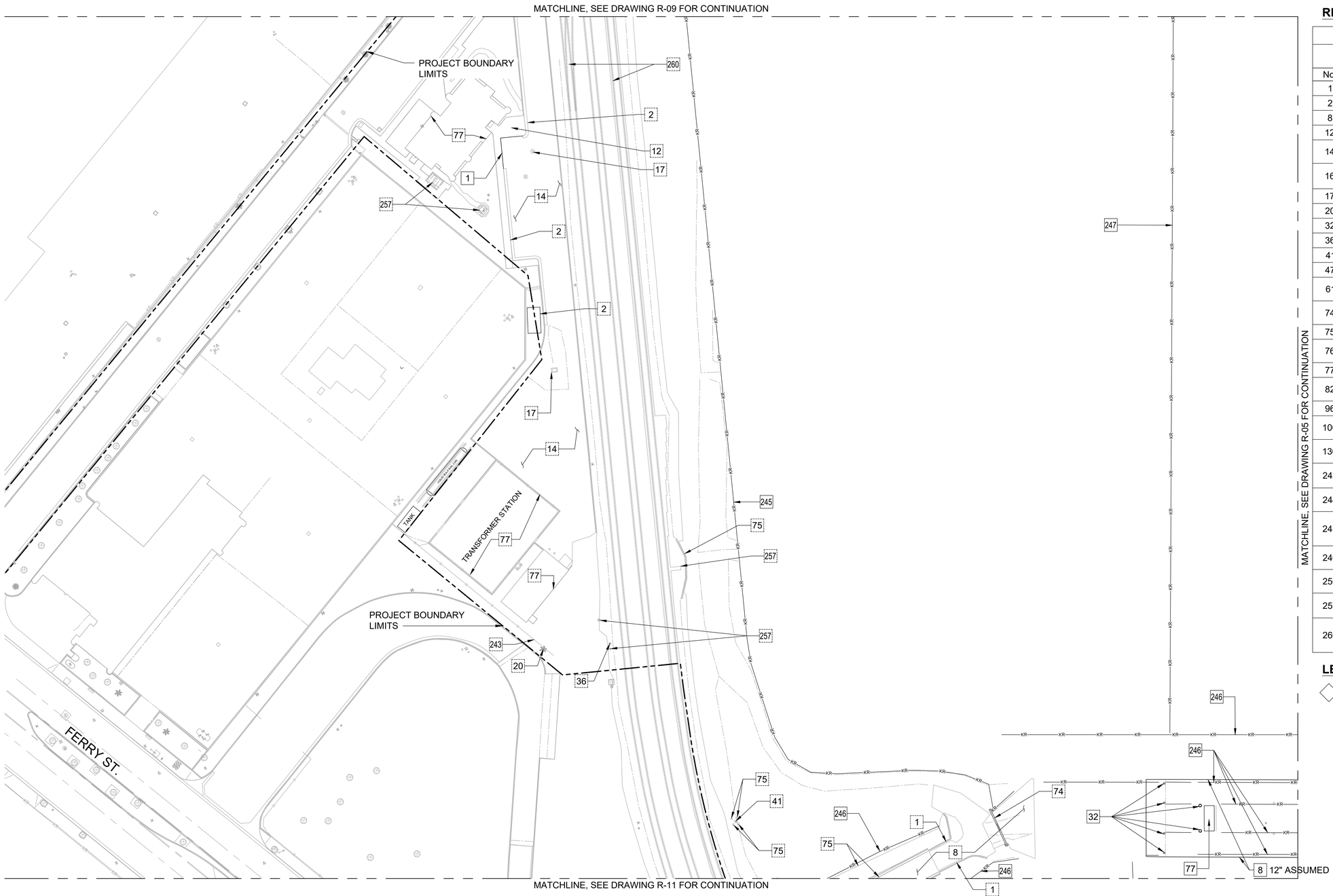

REMOVAL NOTES:

LEGEND OF CONSTRUCTION NOTES			
EXISTING/PROTECT		REMOVE	
No.	CONSTRUCTION ITEM	QUANTITIES	REFERENCE DWG
1	CONCRETE CURB		
2	CURB AND GUTTER		
8	CONCRETE PAVEMENT	26832 SF	2R-12
12	CONCRETE WALK		
14	ASPHALT CONCRETE PAVEMENT	4522 SF	
16	CRUSHED MISC BASE (CMB)		3R-12, 4R-12
17	MAINTENANCE HOLE		
20	TREE		
32	BOLLARD	25 EA	
36	UTILITY POLE		
41	FIRE HYDRANT	1 EA	
47	SIGN		
61	UTILITY VAULT		
74	HEIGHT LIMIT STEEL BEAM STRUCTURE		
75	RETAINING WALL		
76	TUNNEL		
77	BUILDING STRUCTURE	310 SF	2R-12
82	STORM DRAIN MANHOLE JM	1 EA	
96	INFILTRATION BASIN	70764 CF	4R-12
100	TRENCH DRAIN		
130	STORM DRAIN LIFT STATION		
243	CHAIN LINK FENCING WITH BARBED WIRE	1838 LF	1R-12
244	CHAIN LINK FENCING ON K-RAIL		
245	CHAIN LINK FENCING ON K-RAIL WITH BARBED WIRE	5377 LF	3R-12
246	K-RAIL	7594 LF	1R-12, 2R-12, 4R-12
256	R/R SIGNAL EQUIPMENT AND FOUNDATION		
257	RAILROAD EQUIPMENT		
260	RAILROAD TRACK, BALLAST, SUB BALLAST, AND TIES	209 SF	

LEGEND:

COORDINATE POINT

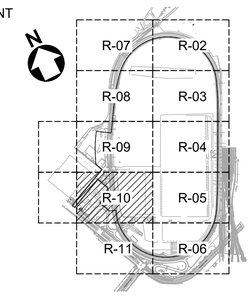

KEY MAP

40' 0' 40' 80'

SCALE: 1" = 40'

1R-10 / R-10 REMOVAL PLAN - AREA 9

SCALE: 1" = 40'

NO.	DATE	DRAWN	REVISIONS -	CHK'D	APP'D
C	7/18/25	-	40% DESIGN		
D	9/19/25	-	80% DESIGN		

NOT FOR CONSTRUCTION

NO.	DATE	DRAWN	REVISIONS -	CHK'D	APP'D

80% DESIGN REVIEW SEP 19 , 2025

Jacobs
2600 MICHELSON DRIVE, SUITE 500
IRVINE, CA 92612
T: (949) 224-7500
F: (949) 224-7501

REGISTERED PROFESSIONAL ENGINEER — MICHAEL S. MCAMIS — No. 60573 — CIVIL — STATE OF CALIFORNIA

SCALE:	1"=40'
DRAWN:	E. FLORES
CHECKED:	G. NGUYEN
DESIGNED:	S. MCAMIS
	ENGINEER / ARCHITECT

TERMINAL ISLAND MARITIME SUPPORT FACILITY

REMOVAL PLAN - AREA 9

THE PORT OF LOS ANGELES
ENGINEERING DIVISION
425 S. PALOS VERDES STREET SAN PEDRO CA 90731-3309

DRAWING NUMBER 1-3513

SHEET NUMBER R-10

POLAPRD1_04/2023_BWD

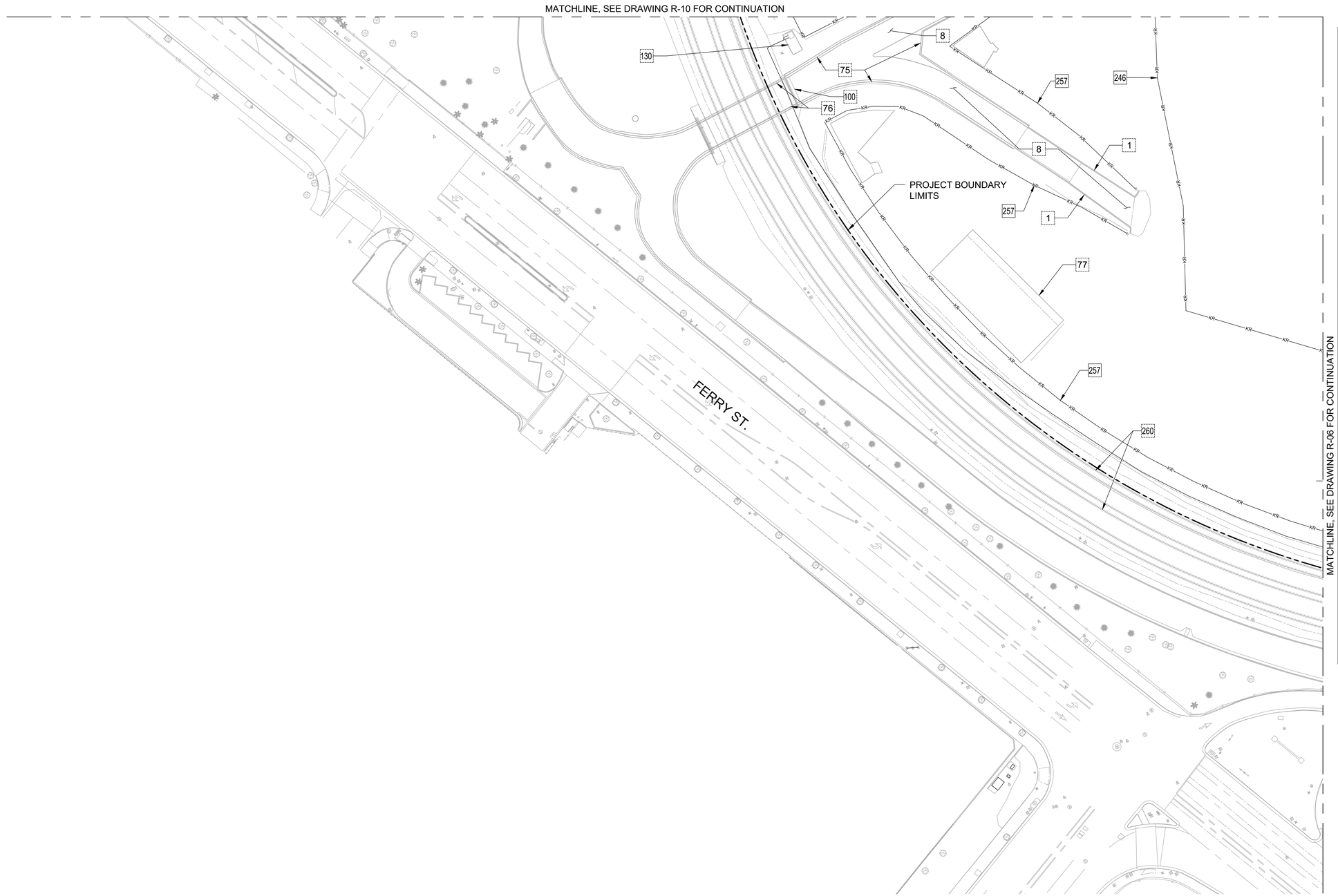

REMOVAL NOTES:

LEGEND OF CONSTRUCTION NOTES

EXISTING/PROTECT ☐ REMOVE

No.	CONSTRUCTION ITEM	QUANTITIES	REFERENCE DWG
1	CONCRETE CURB		
2	CURB AND GUTTER		
8	CONCRETE PAVEMENT	26832 SF	2R-12
12	CONCRETE WALK		
14	ASPHALT CONCRETE PAVEMENT	4522 SF	
16	CRUSHED MISC BASE (CMB)		3R-12, 4R-12
17	MAINTENANCE HOLE		
20	TREE		
32	BOLLARD	25 EA	
36	UTILITY POLE		
41	FIRE HYDRANT	1 EA	
47	SIGN		
61	UTILITY VAULT		
74	HEIGHT LIMIT STEEL BEAM STRUCTURE		
75	RETAINING WALL		
76	TUNNEL		
77	BUILDING STRUCTURE	310 SF	2R-12
82	STORM DRAIN MANHOLE JM	1 EA	
96	INFILTRATION BASIN	70764 CF	4R-12
100	TRENCH DRAIN		
130	STORM DRAIN LIFT STATION		
243	CHAIN LINK FENCING WITH BARBED WIRE	1838 LF	1R-12
244	CHAIN LINK FENCING ON K-RAIL		
245	CHAIN LINK FENCING ON K-RAIL WITH BARBED WIRE	5377 LF	3R-12
246	K-RAIL	7594 LF	1R-12, 2R-12, 4R-12
256	R/R SIGNAL EQUIPMENT AND FOUNDATION		
257	RAILROAD EQUIPMENT		
260	RAILROAD TRACK, BALLAST, SUB BALLAST, AND TIES	209 SF	

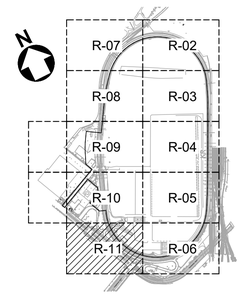

KEY MAP

40' 0' 40' 80'

SCALE: 1" = 40'

1R-11 / R-11 REMOVAL PLAN - AREA 10

SCALE: 1" = 40'

N

NO.	DATE	DRAWN	REVISIONS -	CHK'D	APP'D
C	7/18/25	-	40% DESIGN		
D	9/19/25	-	80% DESIGN		

NOT FOR CONSTRUCTION

NO.	DATE	DRAWN	REVISIONS -	CHK'D	APP'D

80% DESIGN REVIEW SEP 19 , 2025

Jacobs
2600 MICHELSON DRIVE, SUITE 500
IRVINE, CA 92612
T (949) 224-7500
F (949) 224-7501

REGISTERED PROFESSIONAL ENGINEER — MICHAEL S. McAMIS — No. 60573 — CIVIL — STATE OF CALIFORNIA

SCALE: 1"=40'
DRAWN: E. FLORES
CHECKED: G. NGUYEN
DESIGNED: S. MCAMIS
ENGINEER / ARCHITECT

TERMINAL ISLAND MARITIME SUPPORT FACILITY

REMOVAL PLAN - AREA 10

THE PORT OF LOS ANGELES
ENGINEERING DIVISION
425 S. PALOS VERDES STREET SAN PEDRO CA 90731-3309

DRAWING NUMBER 1-3513

SHEET NUMBER R-11

POLAPRO1_042023_BWD

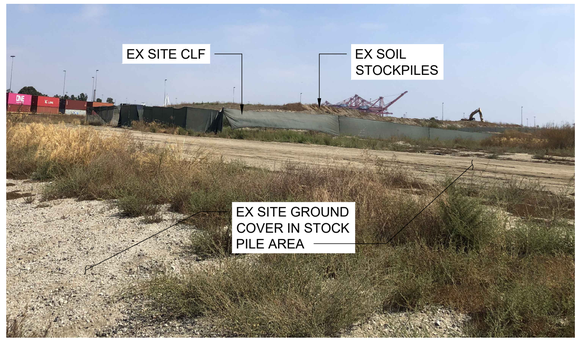

1R-12 / R-02 - R-11 **TYPICAL EXIST FENCING AND SITE REMOVALS**
SCALE: NTS



2R-12 / R-02 - R-11 **TYPICAL EXIST BUILDING STRUCTURE REMOVAL**
SCALE: NTS



3R-12 / R-02 - R-11 **TYPICAL EXIST SITE REMOVALS**
SCALE: NTS



4R-12 / R-02 - R-11 **TYPICAL EXIST INFILTRATION TRENCH REMOVAL**
SCALE: NTS

NO.	DATE	DRAWN	REVISIONS -	CHK'D	APP'D
D	9/19/25	-	80% DESIGN NOT FOR CONSTRUCTION		

NO.	DATE	DRAWN	REVISIONS -	CHK'D	APP'D
			80% DESIGN REVIEW SEP 19 , 2025		

Jacobs
2600 MICHELSON DRIVE, SUITE 500
IRVINE, CA 92612
T: (949) 224-7500
F: (949) 224-7501

REGISTERED PROFESSIONAL ENGINEER
MICHAEL S. MCAMIS
No. 60573
CIVIL
STATE OF CALIFORNIA

SCALE: AS SHOWN
DRAWN: A. TRUJILLO
CHECKED: G. NGUYEN
DESIGNED: S. MCAMIS
ENGINEER / ARCHITECT

TERMINAL ISLAND MARITIME SUPPORT FACILITY

REMOVAL DETAILS

THE PORT OF LOS ANGELES
ENGINEERING DIVISION
425 S. PALOS VERDES STREET SAN PEDRO CA 90731-3309

DRAWING NUMBER: 1-3513
SHEET NUMBER: R-12

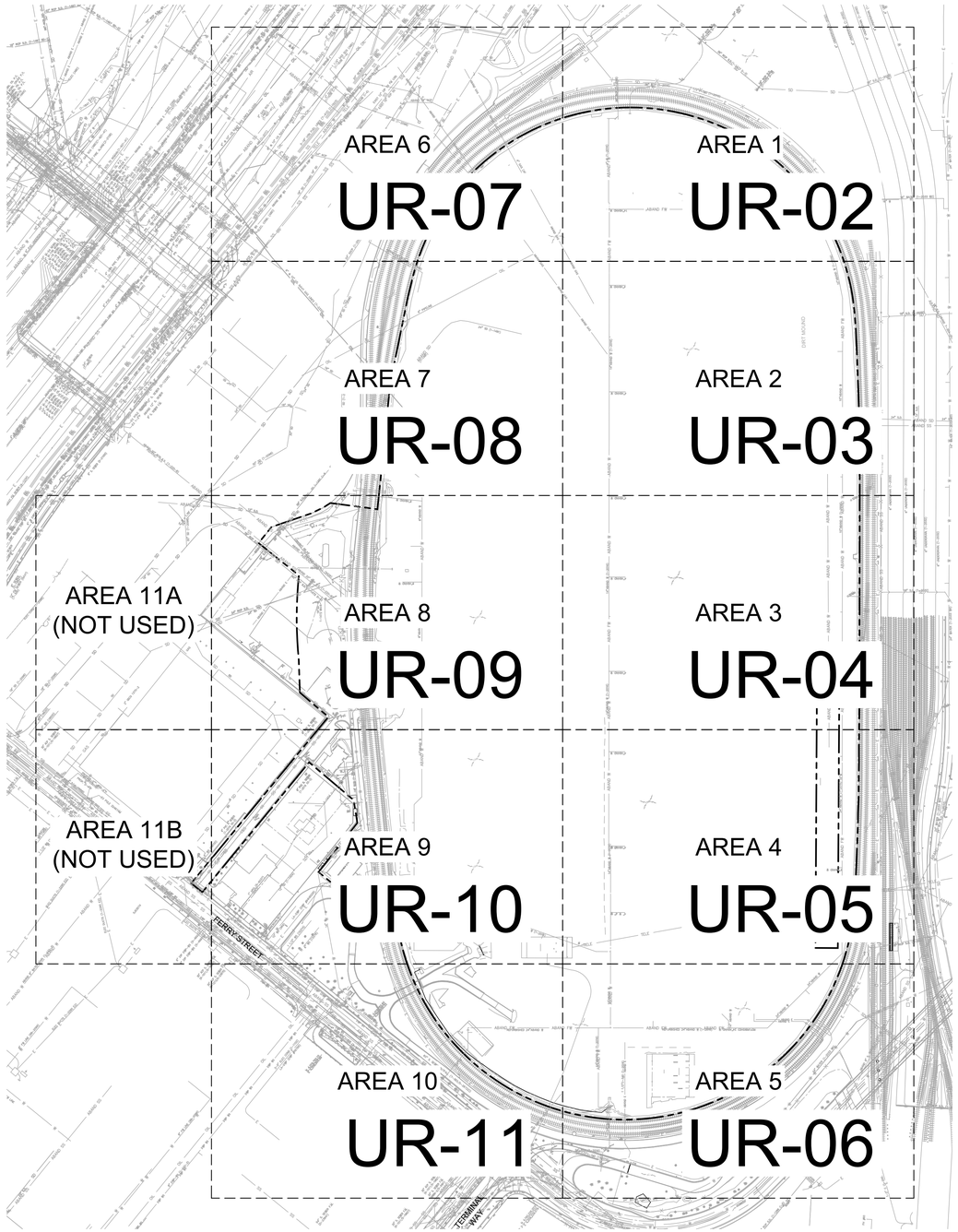

1UR-01 / UR-01 UTILITY REMOVAL KEY PLAN AND NOTES

SCALE: 1" = 200'

GENERAL EXISTING UTILITY NOTES:

1. THE EXISTING UTILITIES AND SUBSTRUCTURES SHOWN ARE APPROXIMATE. THE PRESENCE, LOCATION, SIZE, AND DEPTH OF THE EXISTING UNDERGROUND UTILITIES AS SHOWN ON DRAWINGS WERE OBTAINED FROM RECORD DRAWINGS AND A GROUND PENETRATING RADAR (GPR) SURVEY. NO REPRESENTATION IS MADE AS TO THE ACCURACY OR COMPLETENESS OF SAID UTILITY INFORMATION. POTHOLE REPORT CAN BE FOUND IN BID PACKAGE.
2. IN CONFORMANCE WITH CITY OF LOS ANGELES ORDINANCE NO. 150,478, POTHOLE EXISTING SUBSURFACE INSTALLATIONS CARRYING UNSTABLE SUBSTANCES TO DETERMINE THEIR LOCATIONS AND ELEVATIONS PRIOR TO EXCAVATION.
3. SCHEDULE AND COORDINATE CONSTRUCTION ACTIVITIES WITH ENGINEER, INCLUDING VARIOUS COMPANIES, AGENCIES, AND OTHER CONTRACTORS WHO MAY BE AFFECTED BY THIS WORK.
4. CALL UNDERGROUND SERVICE ALERT (USA) (1-811-422-4133) TWO WORKING DAYS PRIOR TO CONSTRUCTION TO OBTAIN A DIG ALERT ID NUMBER.\PROVIDE THE REFERENCE NUMBER OF THE DIG ALERT CONTACT AND THE ACTION BY DIG ALERT TO ENGINEER.
5. FIELD VERIFY DIMENSIONS FOR CONFLICTS WITH EXISTING UTILITY, SIGNAL CABLES/EQUIPMENT, AND OTHER ITEMS THAT MIGHT IMPAIR CONSTRUCTION ACTIVITIES. NOTIFY ENGINEER IMMEDIATELY WHEREVER UTILITIES ARE ENCOUNTERED THAT ARE NOT SHOWN ON DRAWINGS.
6. ANY ACTIVE EXISTING UTILITIES DESIGNATED AS "PROTECT-IN-PLACE" THAT ARE DAMAGED DURING CONSTRUCTION SHALL BE REPAIRED OR REPLACED AND RECONNECTED AS REQUIRED FOR A COMPLETE OPERATING SYSTEM AT NO ADDITIONAL COST TO DEPARTMENT.
7. PRIOR TO COMMENCING WORK, FIELD VERIFY EXISTING SITE CONDITIONS WITH ENGINEER TO ASCERTAIN THE LIMIT OF WORK ACTIVITIES.
8. UTILITY CALLOUTS SHOW POLA REFERENCE DRAWINGS IN PARENTHESIS. REFER TO T-SHEETS FOR LISTING OF REFERENCE DRAWINGS.
9. PROTECT EQUIPMENT, UTILITY LINES, AND MATERIALS WHEN WORKING ON FINISHED SURFACES, LIMIT DAMAGE TO THE CONFINED SPACE AND RESTORE TO THE ORIGINAL CONDITIONS SURFACES WHICH ARE DAMAGED BECAUSE OF THE INSTALLATION OF THIS CONTRACT WORK.
10. SHOULD CONFLICTING INFORMATION BE FOUND ON DRAWINGS, NOTIFY ENGINEER BEFORE PROCEEDING WITH WORK IN QUESTION.
11. CONTACT UTILITY OWNERS TO VERIFY LOCATIONS OF SUBSTRUCTURES PRIOR TO EXCAVATION.
12. WHERE CROSSING ANY EXISTING SUBSTRUCTURES WITH NEW SUBSURFACE IMPROVEMENTS, TRENCH CAREFULLY TO LOCATE ACTIVE AND IDLE SUBSTRUCTURES AT THESE CROSSINGS.
13. WHEN TRENCHING, PLACE DETECTION TAPE OVER ENCOUNTERED EXISTING UTILITY LINES PER SPECIFICATIONS.
14. REFER TO POTHOLE REPORT FOR ADDITIONAL INFORMATION.

200' 0' 200' 400'

SCALE: 1" = 200'

NO.	DATE	DRAWN	REVISIONS -	CHK'D	APP'D
C	7/18/25	-	40% DESIGN		
D	9/19/25	-	80% DESIGN		

NOT FOR CONSTRUCTION

NO.	DATE	DRAWN	REVISIONS -	CHK'D	APP'D

80% DESIGN REVIEW SEP 19 , 2025

Jacobs
2600 MICHELSON DRIVE, SUITE 500
IRVINE, CA 92612
T (949) 224-7500
F (949) 224-7501

REGISTERED PROFESSIONAL ENGINEER MICHAEL S. McAMIS No. 60573 CIVIL STATE OF CALIFORNIA

SCALE:	1"=200'
DRAWN:	E. FLORES
CHECKED:	G. NGUYEN
DESIGNED:	S. MCAMIS
	ENGINEER / ARCHITECT

TERMINAL ISLAND MARITIME SUPPORT FACILITY

UTILITY REMOVAL KEY PLAN AND NOTES

THE PORT OF LOS ANGELES
ENGINEERING DIVISION
425 S. PALOS VERDES STREET SAN PEDRO CA 90731-3309

DRAWING NUMBER	SHEET NUMBER
1-3513	UR-01

POLAPRO1_042023_BWD

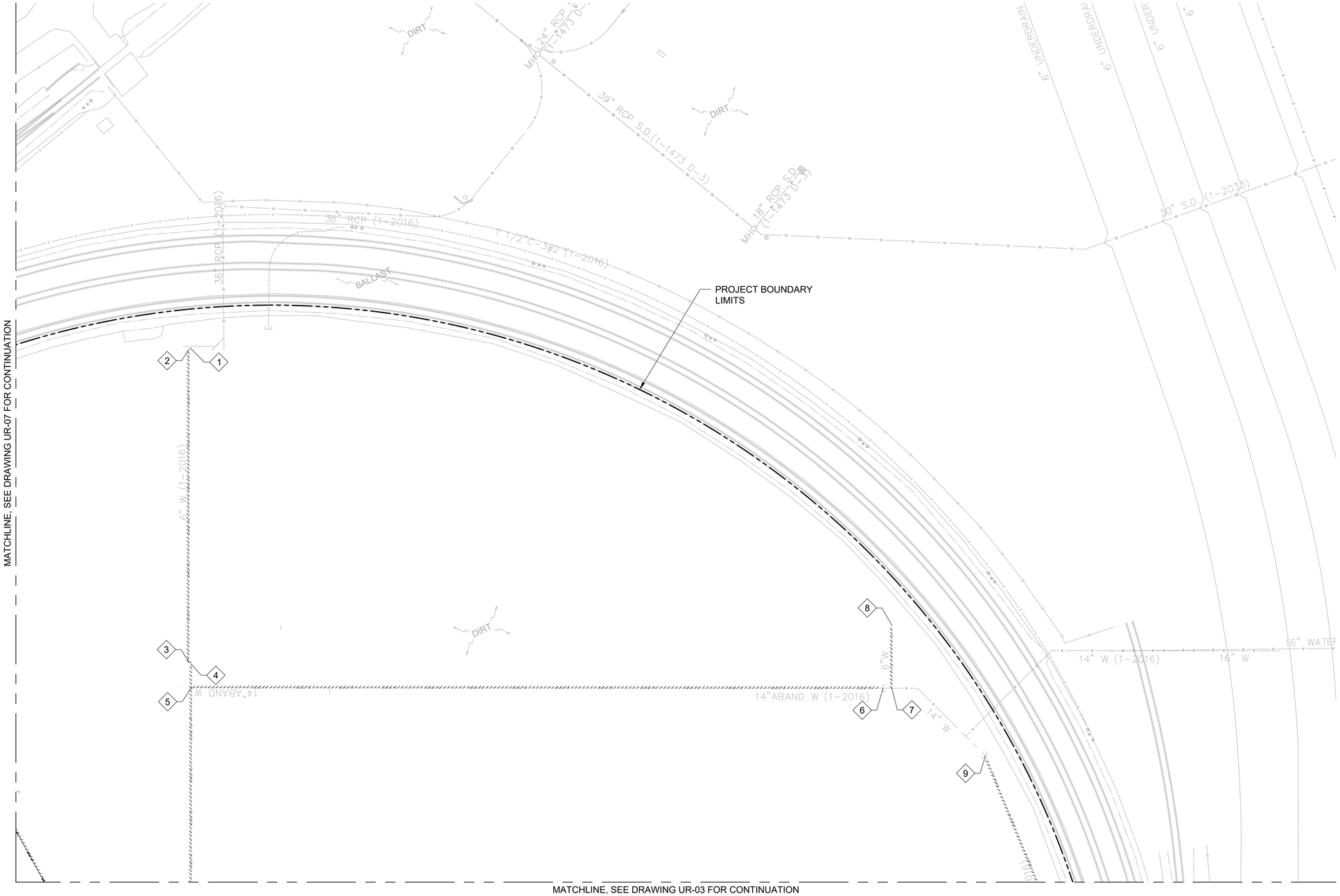

UTILITY REMOVAL LEGEND:

- REMOVE ABANDONED WATER LINES
- REMOVE ABANDONED GAS LINES
- REMOVE ABANDONED STORM DRAIN
- REMOVE ABANDONED ELECTRICAL LINES
- REMOVE TELEPHONE LINES
- REMOVE OIL LINES
- REMOVE STORM DRAIN
- REMOVE WATER LINES

NOTES:

1. SEE GN-04 FOR LEGEND OF ALL OTHER UTILITIES
2. CONTRACTOR TO REMOVE PORTIONS IN CONFLICT (UNO). CONTRACTOR TO CONFIRM ABANDONMENT PRIOR TO REMOVAL.

LEGEND:

◇ COORDINATE POINT

POINT TABLE		
POINT	NORTHING	EASTING
1	1731858.37	6484096.75
2	1731857.83	6484095.24
3	1731643.08	6483993.46
4	1731640.14	6483994.50
5	1731624.16	6483986.93
6	1731398.54	6484462.96
7	1731395.69	6484468.98
8	1731439.15	6484489.57
9	1731318.53	6484511.33

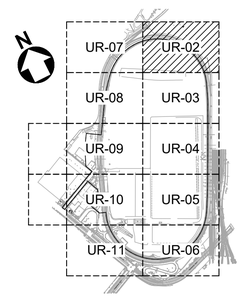

KEY MAP

40' 0' 40' 80'

SCALE: 1" = 40'

1UR-02 / UR-02 UTILITY REMOVAL PLAN - AREA 1

SCALE: 1" = 40'

NO.	DATE	DRAWN	REVISIONS -	CHK'D	APP'D
A	3/20/25	-	30% CONCEPTUAL DESIGN		
B	4/25/25	-	FINAL CONCEPTUAL DESIGN		
C	7/18/25	-	40% DESIGN		
D	9/19/25	-	80% DESIGN		

NOT FOR CONSTRUCTION

80% DESIGN REVIEW
SEP 19 , 2025

Jacobs
2600 MICHELSON DRIVE, SUITE 500
IRVINE, CA 92612
T: (949) 224-7500
F: (949) 224-7501

REGISTERED PROFESSIONAL ENGINEER
MICHAEL S. MCAMIS
No. 60573
CIVIL
STATE OF CALIFORNIA

SCALE: 1"=40'
DRAWN: E. FLORES
CHECKED: G. NGUYEN
DESIGNED: S. MCAMIS
ENGINEER / ARCHITECT

TERMINAL ISLAND MARITIME SUPPORT FACILITY

UTILITY REMOVAL PLAN - AREA 1

THE PORT OF LOS ANGELES
ENGINEERING DIVISION
425 S. PALOS VERDES STREET SAN PEDRO CA 90731-3309

DRAWING NUMBER: 1-3513
SHEET NUMBER: UR-02

POLAPRDT_04/2023_BWD

MATCHLINE, SEE DRAWING UR-03 FOR CONTINUATION

MATCHLINE, SEE DRAWING UR-08 FOR CONTINUATION

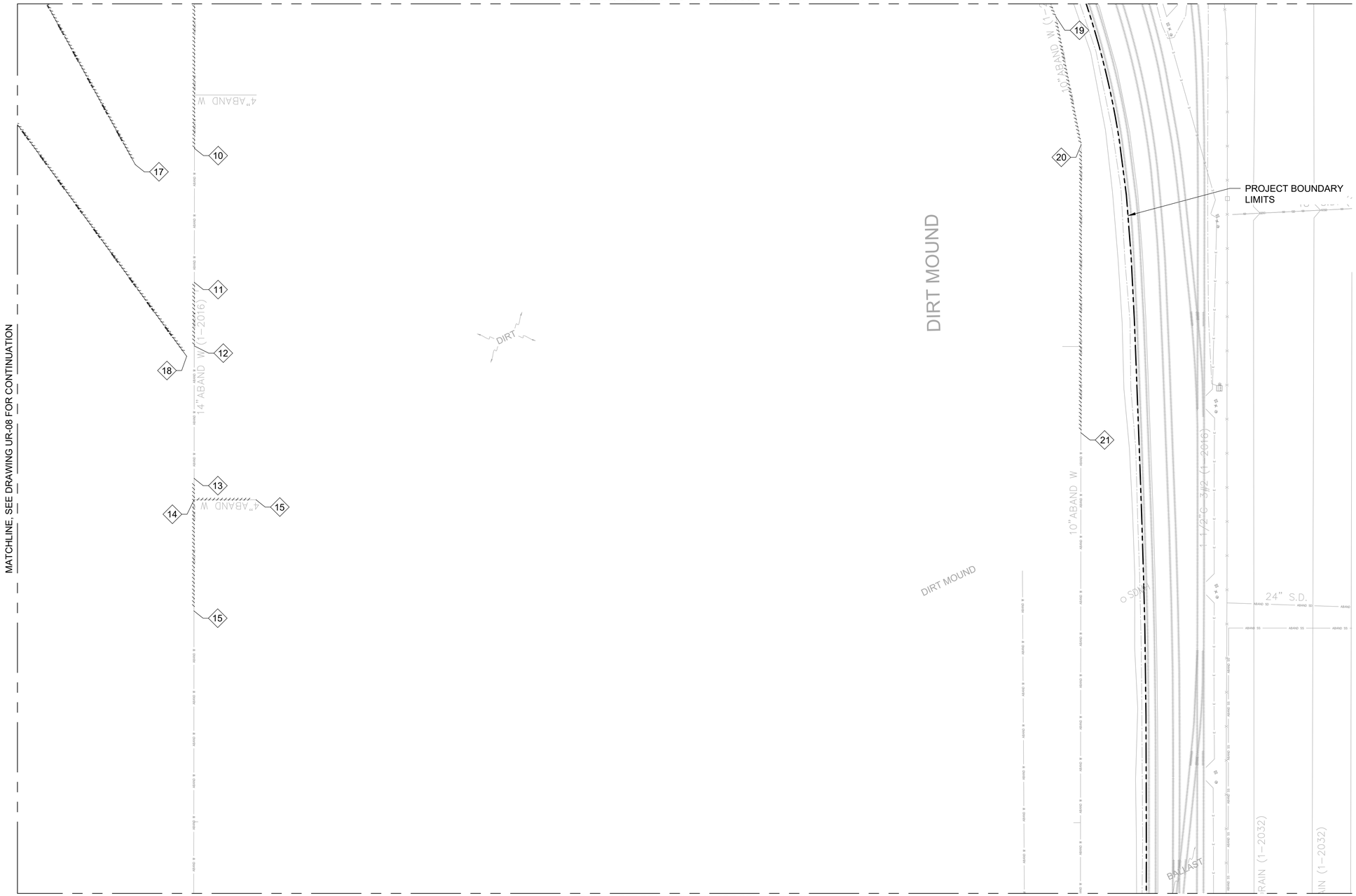

MATCHLINE, SEE DRAWING UR-04 FOR CONTINUATION

UTILITY REMOVAL LEGEND:

- REMOVE ABANDONED WATER LINES
- REMOVE ABANDONED GAS LINES
- REMOVE ABANDONED STORM DRAIN
- REMOVE ABANDONED ELECTRICAL LINES
- REMOVE TELEPHONE LINES
- REMOVE OIL LINES
- REMOVE STORM DRAIN
- REMOVE WATER LINES

NOTES:

1. SEE GN-04 FOR LEGEND OF ALL OTHER UTILITIES
2. CONTRACTOR TO REMOVE PORTIONS IN CONFLICT (UNO). CONTRACTOR TO CONFIRM ABANDONMENT PRIOR TO REMOVAL.

LEGEND:

◇ COORDINATE POINT

POINT TABLE		
POINT	NORTHING	EASTING
10	1731391.16	6483876.45
11	1731299.92	6483833.21
12	1731256.67	6483812.71
13	1731166.42	6483769.93
14	1731151.90	6483763.05
15	1731131.90	6483805.25
16	1731076.19	6483727.17
17	1731399.19	6483830.93
18	1731252.02	6483804.19
19	1731203.65	6484505.59
20	1731108.12	6484481.58
21	1730911.99	6484388.61

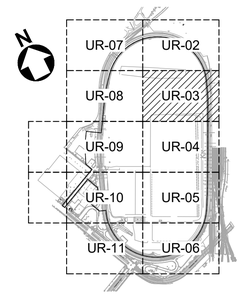

KEY MAP

40' 0' 40' 80'

SCALE: 1" = 40'

1UR-03 / UR-03 UTILITY REMOVAL PLAN - AREA 2

SCALE: 1" = 40'

N

NO.	DATE	DRAWN	REVISIONS -	CHK'D	APP'D
A	3/20/25	-	30% CONCEPTUAL DESIGN		
B	4/25/25	-	FINAL CONCEPTUAL DESIGN		
C	7/18/25	-	40% DESIGN		
D	9/19/25	-	80% DESIGN		

NOT FOR CONSTRUCTION

NO.	DATE	DRAWN	REVISIONS -	CHK'D	APP'D
			80% DESIGN REVIEW SEP 19 , 2025		

Jacobs
2900 MICHELSON DRIVE, SUITE 500
IRVINE, CA 92612
T: (949) 224-7500
F: (949) 224-7501

REGISTERED PROFESSIONAL ENGINEER — MICHAEL S. MCAMIS — No. 60573 — CIVIL — STATE OF CALIFORNIA

SCALE: 1"=40'
DRAWN: E. FLORES
CHECKED: G. NGUYEN
DESIGNED: S. MCAMIS
ENGINEER / ARCHITECT

TERMINAL ISLAND MARITIME SUPPORT FACILITY

UTILITY REMOVAL PLAN - AREA 2

THE PORT OF LOS ANGELES
ENGINEERING DIVISION
425 S. PALOS VERDES STREET SAN PEDRO CA 90731-3309

DRAWING NUMBER: 1-3513
SHEET NUMBER: UR-03

POLAPRD1_04/2023_BWD

MATCHLINE, SEE DRAWING UR-03 FOR CONTINUATION

MATCHLINE, SEE DRAWING UR-09 FOR CONTINUATION

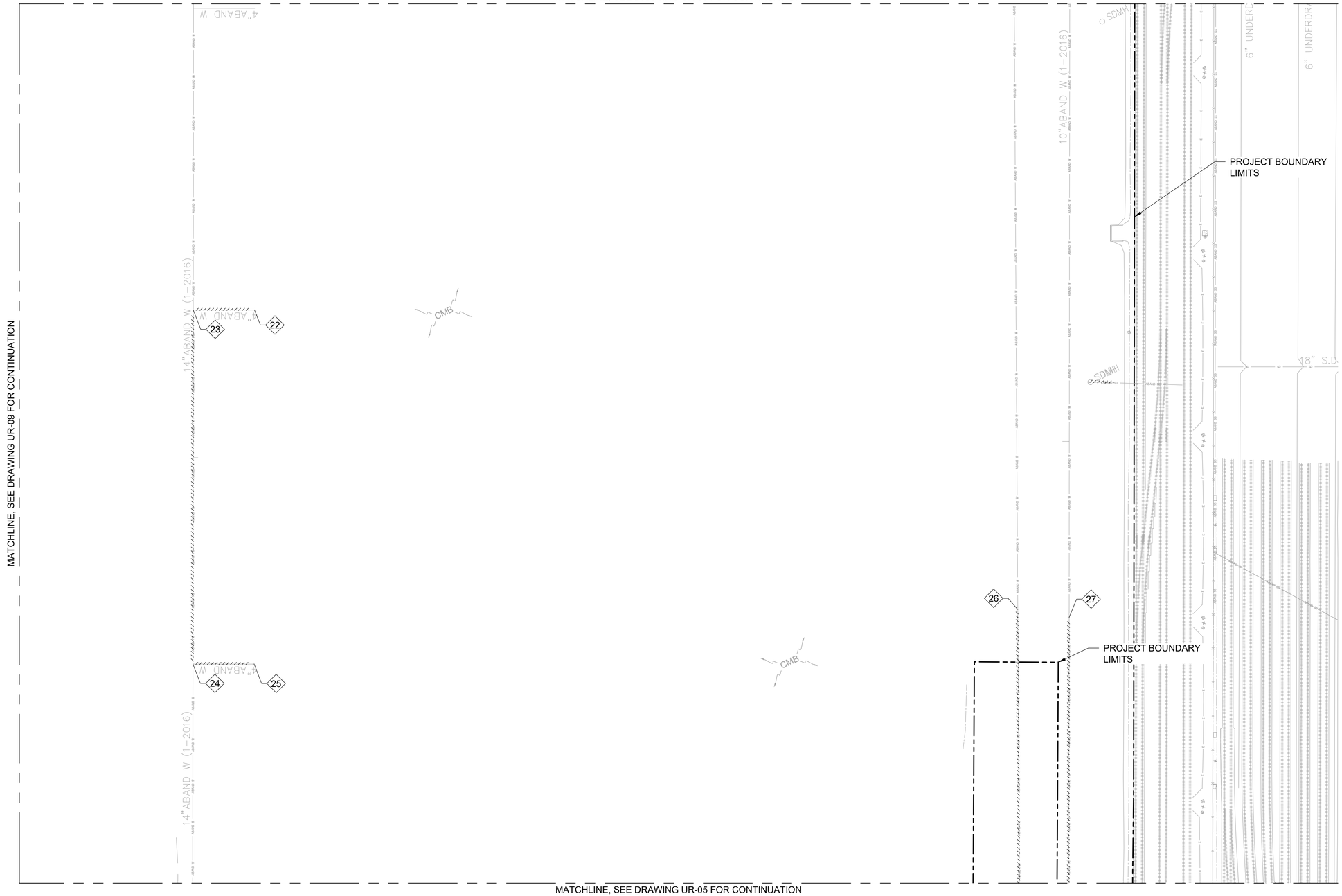

MATCHLINE, SEE DRAWING UR-05 FOR CONTINUATION

UTILITY REMOVAL LEGEND:

- REMOVE ABANDONED WATER LINES
- REMOVE ABANDONED GAS LINES
- REMOVE ABANDONED STORM DRAIN
- REMOVE ABANDONED ELECTRICAL LINES
- REMOVE TELEPHONE LINES
- REMOVE OIL LINES
- REMOVE STORM DRAIN
- REMOVE WATER LINES

NOTES:

1. SEE GN-04 FOR LEGEND OF ALL OTHER UTILITIES
2. CONTRACTOR TO REMOVE PORTIONS IN CONFLICT (UNO). CONTRACTOR TO CONFIRM ABANDONMENT PRIOR TO REMOVAL.

LEGEND:

◇ COORDINATE POINT

POINT TABLE		
POINT	NORTHING	EASTING
22	1730652.97	6483578.25
23	1730672.97	6483536.06
24	1730428.99	6483420.42
25	1730408.99	6483462.61
26	1730197.82	6484006.75
27	1730175.55	6484039.57

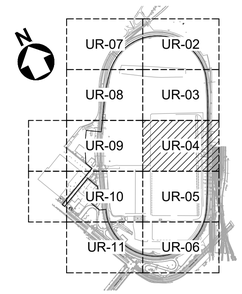

KEY MAP

40' 0' 40' 80'

SCALE: 1" = 40'

1UR-04 / UR-04 UTILITY REMOVAL PLAN - AREA 3

SCALE: 1" = 40'

N

NO.	DATE	DRAWN	REVISIONS -	CHK'D	APP'D
A	3/20/25	-	30% CONCEPTUAL DESIGN		
B	4/25/25	-	FINAL CONCEPTUAL DESIGN		
C	7/18/25	-	40% DESIGN		
D	9/19/25	-	80% DESIGN		

NOT FOR CONSTRUCTION

80% DESIGN REVIEW
SEP 19 , 2025

Jacobs
3600 MICHELSON DRIVE, SUITE 600
IRVINE, CA 92612
T: (949) 224-7500
F: (949) 224-7501

REGISTERED PROFESSIONAL ENGINEER
MICHAEL S. McAMIS
No. 60573
CIVIL
STATE OF CALIFORNIA

SCALE:	1"=40'
DRAWN:	E. FLORES
CHECKED:	G. NGUYEN
DESIGNED:	S. MCAMIS
ENGINEER / ARCHITECT	

TERMINAL ISLAND MARITIME SUPPORT FACILITY

UTILITY REMOVAL PLAN - AREA 3

THE PORT OF LOS ANGELES
ENGINEERING DIVISION
425 S. PALOS VERDES STREET SAN PEDRO CA 90731-3309

DRAWING NUMBER	SHEET NUMBER
1-3513	UR-04

POLAPRD1_042023_BWD

MATCHLINE, SEE DRAWING UR-04 FOR CONTINUATION

MATCHLINE, SEE DRAWING UR-10 FOR CONTINUATION

MATCHLINE, SEE DRAWING UR-06 FOR CONTINUATION

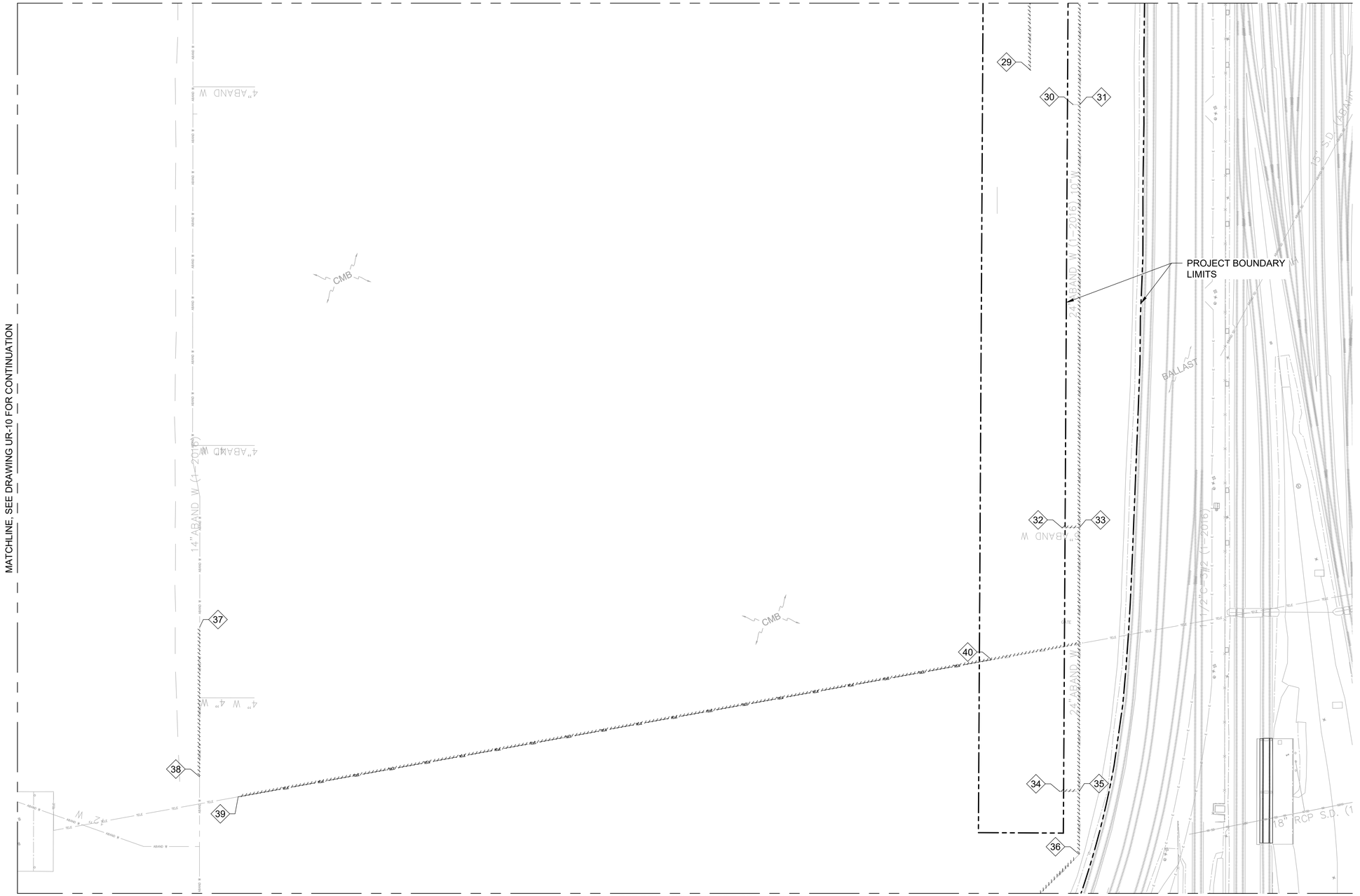

UTILITY REMOVAL LEGEND:

- REMOVE ABANDONED WATER LINES
- REMOVE ABANDONED GAS LINES
- REMOVE ABANDONED STORM DRAIN
- REMOVE ABANDONED ELECTRICAL LINES
- REMOVE TELEPHONE LINES
- REMOVE OIL LINES
- REMOVE STORM DRAIN
- REMOVE WATER LINES

NOTES:

1. SEE GN-04 FOR LEGEND OF ALL OTHER UTILITIES
2. CONTRACTOR TO REMOVE PORTIONS IN CONFLICT (UNO). CONTRACTOR TO CONFIRM ABANDONMENT PRIOR TO REMOVAL.

LEGEND:

◇ COORDINATE POINT

POINT TABLE		
POINT	NORTHING	EASTING
29	1729963.28	6483897.51
30	1729925.79	6483915.44
31	1729923.57	6483920.14
32	1729641.43	6483771.70
33	1729635.74	6483783.71
34	1729462.68	6483685.43
35	1729456.39	6483698.71
36	1729413.38	6483678.32
37	1729851.18	6483152.64
38	1729749.41	6483104.41
39	1729723.30	6483124.25

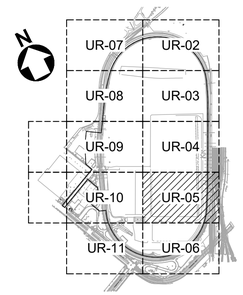

KEY MAP

40' 0' 40' 80'

SCALE: 1" = 40'

1UR-05 / UR-05 UTILITY REMOVAL PLAN - AREA 4

SCALE: 1" = 40'

N

NO.	DATE	DRAWN	REVISIONS -	CHK'D	APP'D
A	3/20/25	-	30% CONCEPTUAL DESIGN		
B	4/25/25	-	FINAL CONCEPTUAL DESIGN		
C	7/18/25	-	40% DESIGN		
D	9/19/25	-	80% DESIGN		

NOT FOR CONSTRUCTION

80% DESIGN REVIEW SEP 19 , 2025

Jacobs
2920 MICHELSON DRIVE, SUITE 500
IRVINE, CA 92612
T: (949) 224-7500
F: (949) 224-7501

REGISTERED PROFESSIONAL ENGINEER — MICHAEL S. MCAMIS — No. 60573 — CIVIL — STATE OF CALIFORNIA

SCALE: 1"=40'
DRAWN: E. FLORES
CHECKED: G. NGUYEN
DESIGNED: S. MCAMIS
ENGINEER / ARCHITECT

TERMINAL ISLAND MARITIME SUPPORT FACILITY

UTILITY REMOVAL PLAN - AREA 4

THE PORT OF LOS ANGELES
ENGINEERING DIVISION
425 S. PALOS VERDES STREET SAN PEDRO CA 90731-3309

DRAWING NUMBER 1-3513

SHEET NUMBER UR-05

POLAPRDT_04/2023_BWD

MATCHLINE, SEE DRAWING UR-05 FOR CONTINUATION

MATCHLINE, SEE DRAWING UR-11 FOR CONTINUATION

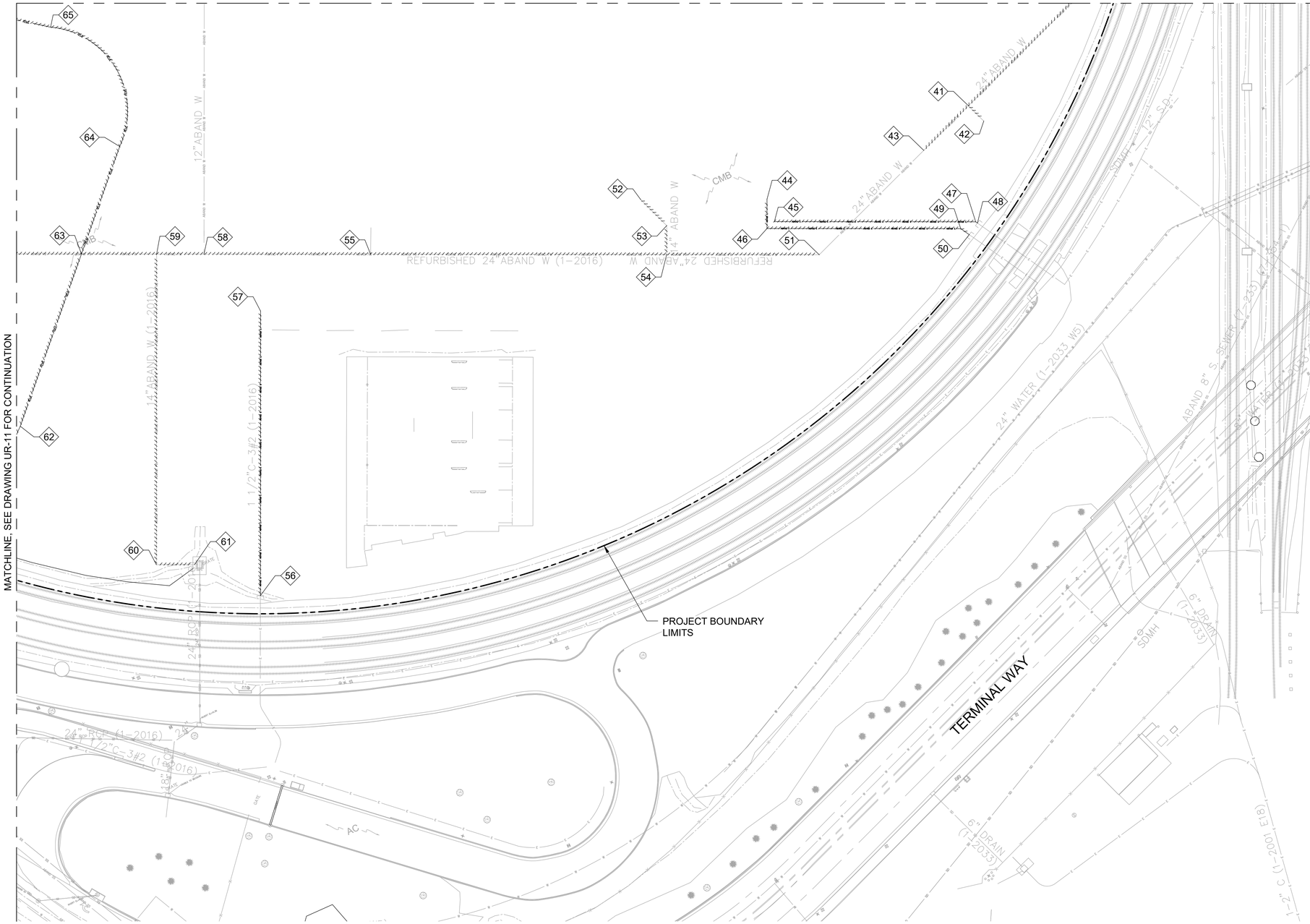

UTILITY REMOVAL LEGEND:

- REMOVE ABANDONED WATER LINES
- REMOVE ABANDONED GAS LINES
- REMOVE ABANDONED STORM DRAIN
- REMOVE ABANDONED ELECTRICAL LINES
- REMOVE TELEPHONE LINES
- REMOVE OIL LINES
- REMOVE STORM DRAIN
- REMOVE WATER LINES

NOTES:

1. SEE GN-04 FOR LEGEND OF ALL OTHER UTILITIES
2. CONTRACTOR TO REMOVE PORTIONS IN CONFLICT (UNO). CONTRACTOR TO CONFIRM ABANDONMENT PRIOR TO REMOVAL.

LEGEND:

◇ COORDINATE POINT

POINT TABLE

POINT	NORTHING	EASTING	POINT	NORTHING	EASTING
41	1729363.77	6483539.31	55	1729452.34	6483098.28
42	1729348.85	6483544.63	56	1729261.43	6482918.95
43	1729348.28	6483495.92	57	1729449.14	6483007.91
44	1729365.01	6483377.18	58	1729504.47	6482988.31
45	1729347.88	6483375.01	59	1729519.27	6482957.07
46	1729345.67	6483368.01	60	1729314.40	6482859.96
47	1729284.91	6483507.89	61	1729302.45	6482885.16
48	1729283.56	6483508.65	62	1729448.28	6482813.32
49	1729285.06	6483495.88	63	1729542.79	6482907.46
50	1729278.45	6483499.62	64	1729601.83	6482966.27
51	1729312.03	6483394.33	65	1729702.17	6482957.89
52	1729404.09	6483293.67			
53	1729378.84	6483302.68			
54	1729359.75	6483293.63			

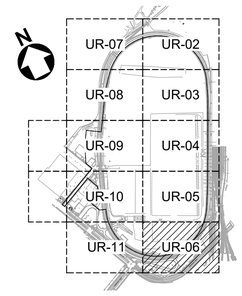

KEY MAP

40' 0' 40' 80'

SCALE: 1" = 40'

1UR-06 / UR-06 UTILITY REMOVAL PLAN - AREA 5

SCALE: 1" = 40'

N

NO.	DATE	DRAWN	REVISIONS -	CHK'D	APP'D
A	3/20/25	-	30% CONCEPTUAL DESIGN		
B	4/25/25	-	FINAL CONCEPTUAL DESIGN		
C	7/18/25	-	40% DESIGN		
D	9/19/25	-	80% DESIGN		

NOT FOR CONSTRUCTION

NO.	DATE	DRAWN	REVISIONS -	CHK'D	APP'D
			80% DESIGN REVIEW SEP 19 , 2025		

Jacobs
2900 MICHELSON DRIVE, SUITE 500
IRVINE, CA 92612
T: (949) 224-7500
F: (949) 224-7501

REGISTERED PROFESSIONAL ENGINEER — MICHAEL S. MCAMIS — No. 60573 — CIVIL — STATE OF CALIFORNIA

SCALE: 1"=40'
DRAWN: E. FLORES
CHECKED: G. NGUYEN
DESIGNED: S. MCAMIS
ENGINEER / ARCHITECT

TERMINAL ISLAND MARITIME SUPPORT FACILITY

UTILITY REMOVAL PLAN - AREA 5

THE PORT OF LOS ANGELES
ENGINEERING DIVISION
425 S. PALOS VERDES STREET SAN PEDRO CA 90731-3309

DRAWING NUMBER 1-3513

SHEET NUMBER UR-06

POLAPRDT_04/2023_BWD

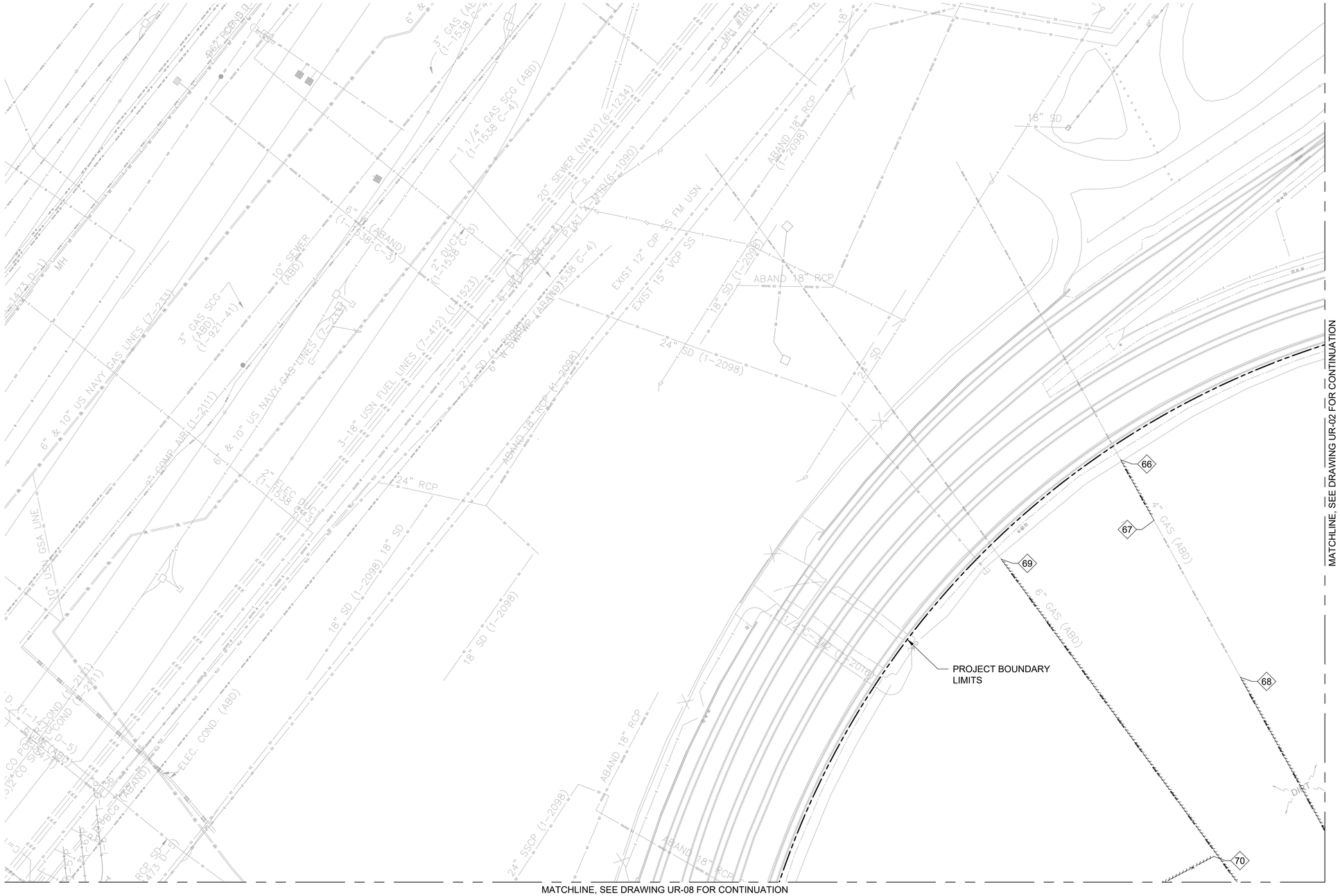

UTILITY REMOVAL LEGEND:

- REMOVE ABANDONED WATER LINES
- REMOVE ABANDONED GAS LINES
- REMOVE ABANDONED STORM DRAIN
- REMOVE ABANDONED ELECTRICAL LINES
- REMOVE TELEPHONE LINES
- REMOVE OIL LINES
- REMOVE STORM DRAIN
- REMOVE WATER LINES

NOTES:

1. SEE GN-04 FOR LEGEND OF ALL OTHER UTILITIES
2. CONTRACTOR TO REMOVE PORTIONS IN CONFLICT (UNO). CONTRACTOR TO CONFIRM ABANDONMENT PRIOR TO REMOVAL.

LEGEND:

◇ COORDINATE POINT

POINT TABLE		
POINT	NORTHING	EASTING
66	1731904.61	6483799.63
67	1731852.06	6483802.88
68	1731715.88	6483811.31
69	1731875.07	6483685.07
70	1731601.16	6483734.59

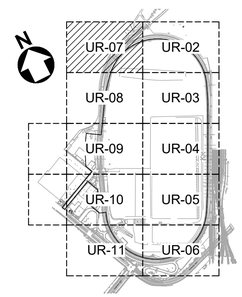

KEY MAP

40' 0' 40' 80'

SCALE: 1" = 40'

1UR-07 / UR-07 UTILITY REMOVAL PLAN - AREA 6

SCALE: 1" = 40'

N

NO.	DATE	DRAWN	REVISIONS -	CHK'D	APP'D
A	3/20/25	-	30% CONCEPTUAL DESIGN		
B	4/25/25	-	FINAL CONCEPTUAL DESIGN		
C	7/18/25	-	40% DESIGN		
D	9/19/25	-	80% DESIGN		

NOT FOR CONSTRUCTION

NO.	DATE	DRAWN	REVISIONS -	CHK'D	APP'D

80% DESIGN REVIEW
SEP 19 , 2025

Jacobs
2020 MICHELSON DRIVE, SUITE 600
IRVINE, CA 92612
T: (949) 224-7500
F: (949) 224-7501

REGISTERED PROFESSIONAL ENGINEER
MICHAEL S. MCAMIS
No. 60573
CIVIL
STATE OF CALIFORNIA

SCALE:	1"=40'
DRAWN:	E. FLORES
CHECKED:	G. NGUYEN
DESIGNED:	S. MCAMIS
ENGINEER / ARCHITECT	

TERMINAL ISLAND MARITIME SUPPORT FACILITY

UTILITY REMOVAL PLAN - AREA 6

THE PORT OF LOS ANGELES
ENGINEERING DIVISION
425 S. PALOS VERDES STREET SAN PEDRO CA 90731-3309

DRAWING NUMBER	SHEET NUMBER
1-3513	UR-07

POLAPRD1_04/2023_BWD

MATCHLINE, SEE DRAWING UR-07 FOR CONTINUATION

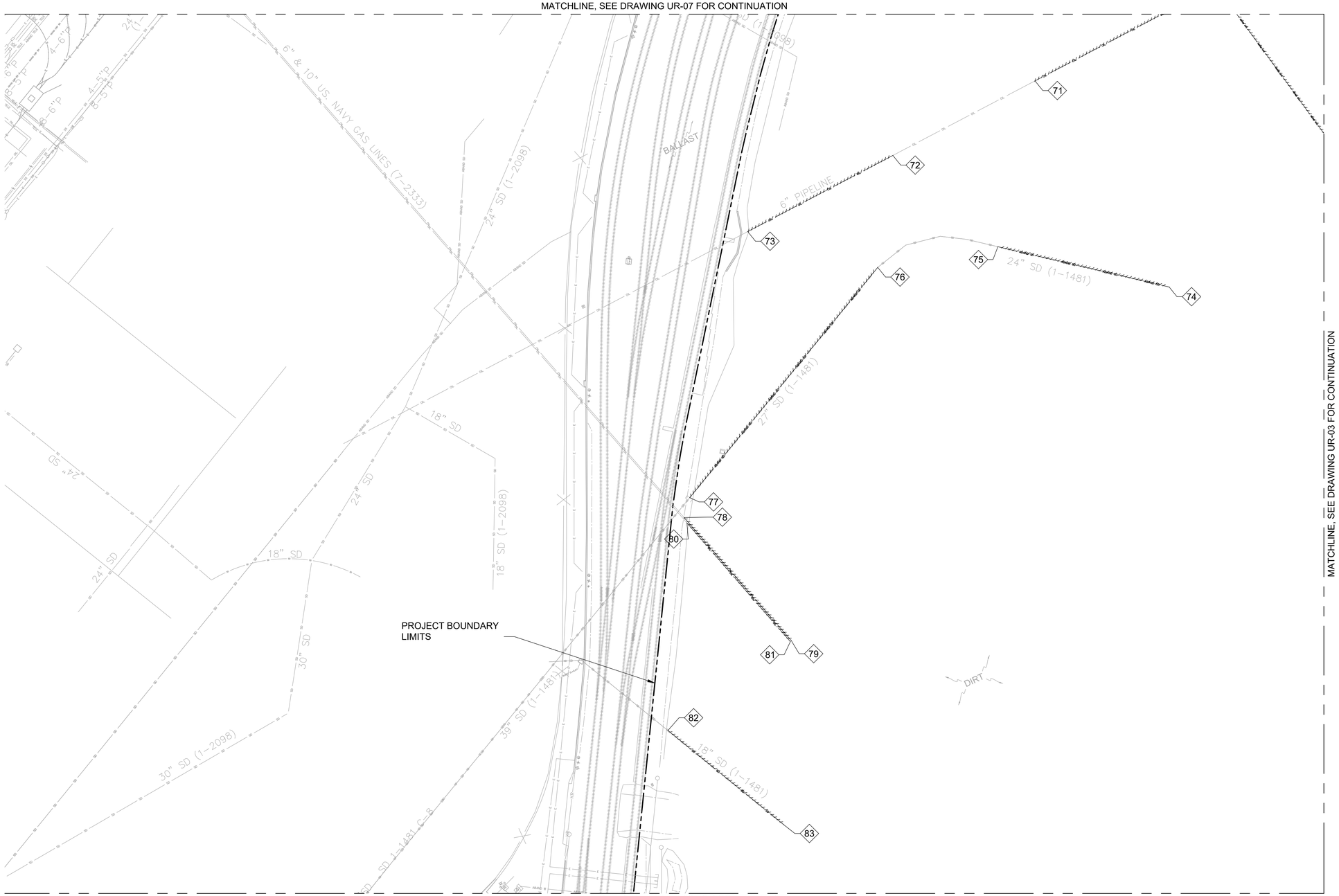

MATCHLINE, SEE DRAWING UR-09 FOR CONTINUATION

UTILITY REMOVAL LEGEND:

- REMOVE ABANDONED WATER LINES
- REMOVE ABANDONED GAS LINES
- REMOVE ABANDONED STORM DRAIN
- REMOVE ABANDONED ELECTRICAL LINES
- REMOVE TELEPHONE LINES
- REMOVE OIL LINES
- REMOVE STORM DRAIN
- REMOVE WATER LINES

NOTES:

1. SEE GN-04 FOR LEGEND OF ALL OTHER UTILITIES
2. CONTRACTOR TO REMOVE PORTIONS IN CONFLICT (UNO). CONTRACTOR TO CONFIRM ABANDONMENT PRIOR TO REMOVAL.

LEGEND:

◇ COORDINATE POINT

MATCHLINE, SEE DRAWING UR-03 FOR CONTINUATION

POINT TABLE		
POINT	NORTHING	EASTING
71	1731594.80	6483581.69
72	1731589.71	6483459.46
73	1731584.52	6483334.63
74	1731408.99	6483606.97
75	1731492.56	6483502.05
76	1731517.47	6483412.52
77	1731420.05	6483207.97
78	1731408.17	6483197.54
79	1731288.29	6483231.35
80	1731403.56	6483197.80
81	1731288.02	6483230.39
82	1731266.62	6483117.02
83	1731163.99	6483166.14

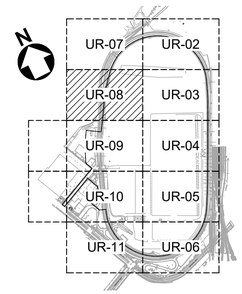

KEY MAP

40' 0' 40' 80'

SCALE: 1" = 40'

1UR-08 / UR-08 UTILITY REMOVAL PLAN - AREA 7

SCALE: 1" = 40'

NO.	DATE	DRAWN	REVISIONS -	CHK'D	APP'D
A	3/20/25	-	30% CONCEPTUAL DESIGN		
B	4/25/25	-	FINAL CONCEPTUAL DESIGN		
C	7/18/25	-	40% DESIGN		
D	9/19/25	-	80% DESIGN		

NOT FOR CONSTRUCTION

80% DESIGN REVIEW SEP 19 , 2025

Jacobs
2301 MICHELSON DRIVE, SUITE 500
IRVINE, CA 92612
T: (949) 224-7500
F: (949) 224-7501

REGISTERED PROFESSIONAL ENGINEER — MICHAEL S. MCAMIS — No. 60573 — CIVIL — STATE OF CALIFORNIA

SCALE: 1"=40'
DRAWN: E. FLORES
CHECKED: G. NGUYEN
DESIGNED: A. MCAMIS
ENGINEER / ARCHITECT

TERMINAL ISLAND MARITIME SUPPORT FACILITY

UTILITY REMOVAL PLAN - AREA 7

THE PORT OF LOS ANGELES
ENGINEERING DIVISION
425 S. PALOS VERDES STREET SAN PEDRO CA 90731-3309

DRAWING NUMBER: 1-3513
SHEET NUMBER: UR-08

POLAPRD1_04/2023_BWD



UTILITY REMOVAL LEGEND:

- REMOVE ABANDONED WATER LINES
- REMOVE ABANDONED GAS LINES
- REMOVE ABANDONED STORM DRAIN
- REMOVE ABANDONED ELECTRICAL LINES
- REMOVE TELEPHONE LINES
- REMOVE OIL LINES
- REMOVE STORM DRAIN
- REMOVE WATER LINES

NOTES:

1. SEE GN-04 FOR LEGEND OF ALL OTHER UTILITIES
2. CONTRACTOR TO REMOVE PORTIONS IN CONFLICT (UNO). CONTRACTOR TO CONFIRM ABANDONMENT PRIOR TO REMOVAL.

LEGEND:

◇ COORDINATE POINT

MATCHLINE, SEE DRAWING UR-04 FOR CONTINUATION

POINT TABLE		
POINT	NORTHING	EASTING
84	1731108.69	6483128.22
85	1731155.56	6483050.46
86	1730912.66	6482995.64
87	1730888.82	6483045.94
88	1730870.76	6483037.39
89	1730822.38	6483014.45
90	1730744.55	6482977.57
91	1730587.77	6482903.26
92	1730768.47	6482850.45
93	1730738.93	6482860.95
94	1730609.32	6482799.35
95	1730573.41	6482782.28
96	1730572.08	6482781.46
97	1730612.90	6482789.29
98	1730586.09	6482864.45

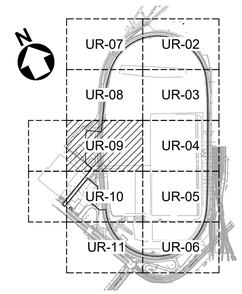

KEY MAP

40' 0' 40' 80'

SCALE: 1" = 40'

1UR-09 / UR-09 UTILITY REMOVAL PLAN - AREA 8

SCALE: 1" = 40'

N

NO.	DATE	DRAWN	REVISIONS -	CHK'D	APP'D
A	3/20/25	-	30% CONCEPTUAL DESIGN		
B	4/25/25	-	FINAL CONCEPTUAL DESIGN		
C	7/18/25	-	40% DESIGN		
D	9/19/25	-	80% DESIGN		

NOT FOR CONSTRUCTION

NO.	DATE	DRAWN	REVISIONS -	CHK'D	APP'D

80% DESIGN REVIEW
SEP 19 , 2025

Jacobs
2600 MICHELSON DRIVE, SUITE 500
IRVINE, CA 92612
T: (949) 224-7500
F: (949) 224-7501

REGISTERED PROFESSIONAL ENGINEER
MICHAEL S. MCAMIS
No. 60573
CIVIL
STATE OF CALIFORNIA

SCALE: 1"=40'
DRAWN: E. FLORES
CHECKED: G. NGUYEN
DESIGNED: S. MCAMIS
ENGINEER / ARCHITECT

TERMINAL ISLAND MARITIME SUPPORT FACILITY

UTILITY REMOVAL PLAN - AREA 8

THE PORT OF LOS ANGELES
ENGINEERING DIVISION
425 S. PALOS VERDES STREET SAN PEDRO CA 90731-3309

DRAWING NUMBER: 1-3513
SHEET NUMBER: UR-09

POLAPRDT_04/2023_BW3

MATCHLINE, SEE DRAWING UR-09 FOR CONTINUATION

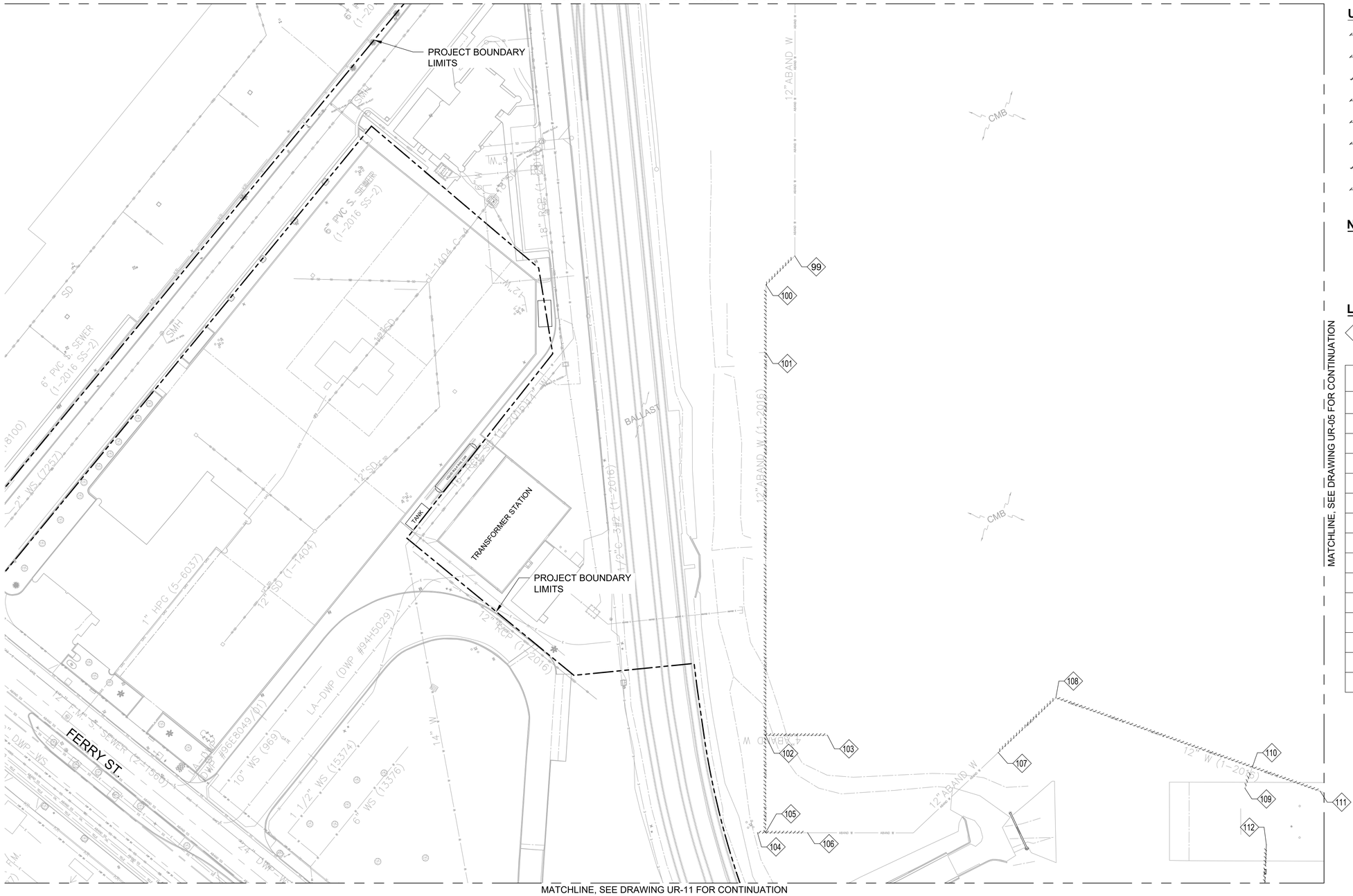

MATCHLINE, SEE DRAWING UR-11 FOR CONTINUATION

UTILITY REMOVAL LEGEND:

- REMOVE ABANDONED WATER LINES
- REMOVE ABANDONED GAS LINES
- REMOVE ABANDONED STORM DRAIN
- REMOVE ABANDONED ELECTRICAL LINES
- REMOVE TELEPHONE LINES
- REMOVE OIL LINES
- REMOVE STORM DRAIN
- REMOVE WATER LINES

NOTES:

1. SEE GN-04 FOR LEGEND OF ALL OTHER UTILITIES
2. CONTRACTOR TO REMOVE PORTIONS IN CONFLICT (UNO). CONTRACTOR TO CONFIRM ABANDONMENT PRIOR TO REMOVAL.

LEGEND:

◇ COORDINATE POINT

MATCHLINE, SEE DRAWING UR-05 FOR CONTINUATION

POINT TABLE		
POINT	NORTHING	EASTING
99	1730333.20	6482782.60
100	1730322.77	6482753.38
101	1730275.97	6482731.20
102	1730012.39	6482606.27
103	1729992.18	6482648.92
104	1729947.83	6482568.92
105	1729945.21	6482574.43
106	1729931.46	6482603.46
107	1729924.74	6482760.95
108	1729943.58	6482818.43
109	1729819.80	6482919.31
110	1729831.75	6482931.17
111	1729793.07	6482970.15
112	1729773.86	6482915.63

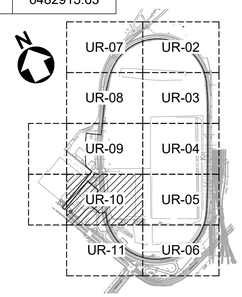

KEY MAP

40' 0' 40' 80'

SCALE: 1" = 40'

1UR-10 / UR-10 UTILITY REMOVAL PLAN - AREA 9

SCALE: 1" = 40'

N

NO.	DATE	DRAWN	REVISIONS -	CHK'D	APP'D
A	3/20/25	-	30% CONCEPTUAL DESIGN		
B	4/25/25	-	FINAL CONCEPTUAL DESIGN		
C	7/18/25	-	40% DESIGN		
D	9/19/25	-	80% DESIGN		

NOT FOR CONSTRUCTION

NO.	DATE	DRAWN	REVISIONS -	CHK'D	APP'D

80% DESIGN REVIEW SEP 19 , 2025

Jacobs
2600 MICHELSON DRIVE, SUITE 500
IRVINE, CA 92612
T: (949) 224-7500
F: (949) 224-7501

REGISTERED PROFESSIONAL ENGINEER — MICHAEL S. McAMIS — No. 60573 — CIVIL — STATE OF CALIFORNIA

SCALE: 1"=40'
DRAWN: E. FLORES
CHECKED: G. NGUYEN
DESIGNED: S. MCAMIS
ENGINEER / ARCHITECT

TERMINAL ISLAND MARITIME SUPPORT FACILITY

UTILITY REMOVAL PLAN - AREA 9

THE PORT OF LOS ANGELES
ENGINEERING DIVISION
425 S. PALOS VERDES STREET SAN PEDRO CA 90731-3309

DRAWING NUMBER: 1-3513
SHEET NUMBER: UR-10

POLAPRO1_042023_BWD

MATCHLINE, SEE DRAWING UR-10 FOR CONTINUATION

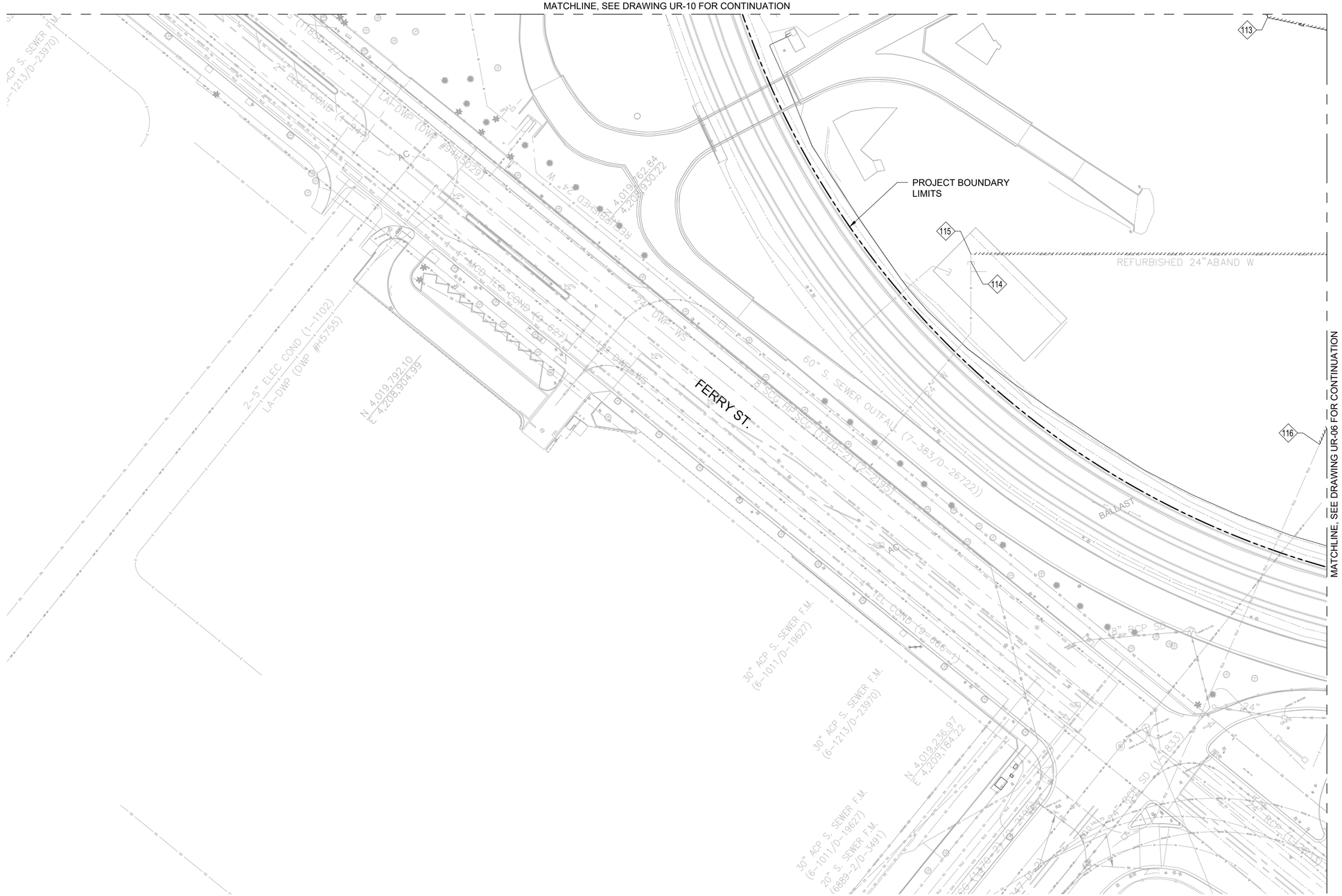

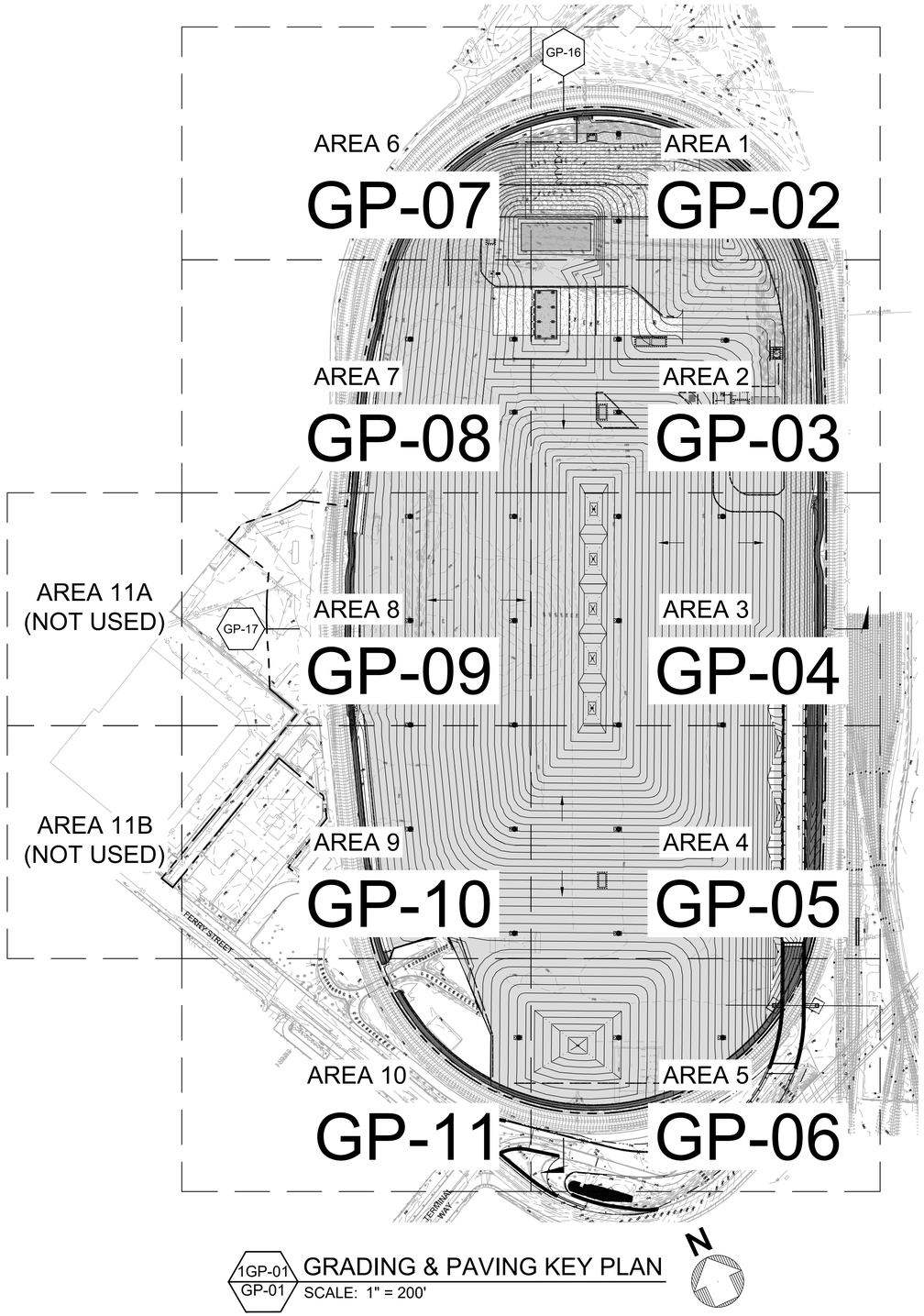

1GP-01
GP-01 GRADING & PAVING KEY PLAN
SCALE: 1" = 200'

N

GENERAL CIVIL NOTES:

1. COORDINATES ARE BASED ON THE NORTH AMERICAN DATUM OF 1983 (NAD 83), CALIFORNIA COORDINATE SYSTEM, ZONE 5, U.S. FEET. 1991.35 EPOCH.
2. ELEVATIONS ARE BASED ON THE NATIONAL GEODETIC VERTICAL DATUM OF 1929 (NGVD 29), MEAN LOWER LOW WATER (MLLW).
   USC&GS BM #DY1083 941 0660 TIDAL 8 EL= 13.929
3. POLA SHALL CONDUCT COMPACTION TESTING.
4. FOLLOW THE LATEST STANDARD SPECIFICATIONS FOR PUBLIC WORKS CONSTRUCTION "GREEN BOOK" UNLESS OTHERWISE NOTED.
5. SAFE CONSTRUCTION EXCAVATION SLOPES AND SHORING ARE THE RESPONSIBILITY OF CONTRACTOR AND SHALL COMPLY WITH CAL OSHA AND OTHER APPLICABLE SAFETY REGULATIONS.
6. COMPLETE WORK CALLED FOR ON DRAWINGS INCLUDING WORK NOTED OUTSIDE PROJECT SITE LIMITS, UNLESS OTHERWISE INDICATED OR IDENTIFIED AS "NOT IN CONTRACT" (NIC). COORDINATE WORK OUTSIDE OF PROJECT SITE LIMITS OR IN BLOCKED OUT AREAS WITH THE OTHER CONTRACTORS OR ENGINEER.
7. PREPARE SUBGRADE AS DEFINED IN SPECIFICATIONS.
8. REGISTERED DEPUTY GRADING INSPECTOR IS REQUIRED ON GRADING AND FOUNDATION EARTHWORK WHERE SITE EXCEEDS 60,000 SQUARE FEET, CUT OR FILL SLOPES ARE STEEPER THAN 2:1, SHORING WORK INCLUDING SLOT CUTS.
9. PULL BOXES, MAINTENANCE HOLES, ELECTRICAL RISERS, ELECTRICAL VAULTS, CLEANOUTS, OR ANY OTHER UTILITY ACCESS COVER CALLED OUT AS EXISTING WITHIN PROJECT SITE LIMITS SHALL BE ADJUSTED TO PROPOSED GRADE AND PROTECTED IN PLACE. ITEMS IDENTIFIED AS EXISTING SHALL BE PROTECTED IN PLACE UNLESS NOTED OTHERWISE. STRUCTURES SHALL BE DESIGNED BY A REGISTERED STRUCTURAL OR CIVIL ENGINEER REGISTERED IN CALIFORNIA. SHOP DRAWINGS AND CALCULATIONS BEARING ENGINEER'S SIGNATURE AND STAMP SHALL BE SUBMITTED.
10. PLACE FILL UNDER THE INSPECTION AND APPROVAL OF ENGINEER. NOTIFY ENGINEER AT LEAST 2 WORKING DAYS PRIOR TO STARTING EACH LIFT OF COMPACTED MATERIALS.
11. PROPOSED GRADES ARE TO JOIN EXISTING GRADING AT PROJECT LIMITS AND EXISTING SIDEWALK AND CURB. ELEVATIONS ON DRAWINGS TO BE VERIFIED IN FIELD.
12. RETAIN ERODED SEDIMENTS AND POLLUTANTS ON PROJECT SITE AND SHALL NOT BE TRANSPORTED FROM PROJECT SITE VIA SHEET FLOW, SWALES, AREA DRAINS, NATURAL DRAINAGE, OR WIND.
13. COVER STOCKPILES OF EARTH AND OTHER CONSTRUCTION-RELATED MATERIALS AND PROTECT FROM BEING TRANSPORTED FROM PROJECT SITE BY WIND OR WATER.
14. STORE FUELS, OILS, SOLVENTS, AND OTHER TOXIC MATERIALS IN CONFORMANCE WITH MANUFACTURER'S WRITTEN INSTRUCTIONS AND SHALL NOT CONTAMINATE THE SOIL OR THE SURFACE WATERS. APPROVED TOXIC STORAGE CONTAINERS ARE TO BE PROTECTED FROM THE WEATHER. SPILLS MUST BE CLEANED UP IMMEDIATELY AND DISPOSED OF PROPERLY AND SHALL NOT BE WASHED INTO THE DRAINAGE SYSTEM.
15. CONTAIN NON-STORM WATER RUNOFF FROM EQUIPMENT AND VEHICLE WASHING AND ANY OTHER ACTIVITY ON PROJECT SITE.
16. EXCESS OR WASTE CONCRETE MAY NOT BE WASHED INTO THE PUBLIC WAY OR ANY DRAINAGE SYSTEM. PROVISIONS SHALL BE MADE TO RETAIN CONCRETE WASTE ON-SITE UNTIL IT CAN BE APPROPRIATELY DISPOSED OF OR RECYCLED.
17. DEPOSIT TRASH AND CONSTRUCTION-RELATED SOLID WASTES INTO A COVERED RECEPTACLE TO PREVENT CONTAMINATION OF STORM WATER AND DISPERSAL BY WIND.
18. SEDIMENTS AND OTHER MATERIALS SHALL NOT BE TRACKED FROM PROJECT SITE BY VEHICLE TRAFFIC. THE CONSTRUCTION ENTRANCE ROADWAYS MUST BE STABILIZED SO AS TO INHIBIT SEDIMENTS FROM BEING DEPOSITED INTO THE STREET/PUBLIC WAYS. ACCIDENTAL DEPOSITIONS MUST BE SWEPT UP IMMEDIATELY AND MAY NOT BE WASHED DOWN BY RAIN OR BY ANY OTHER MEANS.
19. PROVIDE RETENTION BASINS OF SUFFICIENT SIZE TO RETAIN STORM WATER RUNOFF ON-SITE AND PROPERLY LOCATE TO COLLECT TRIBUTARY PROJECT SITE RUNOFF.
20. WHERE RETENTION OF STORM WATER RUNOFF ON-SITE IS NOT FEASIBLE DUE TO SITE CONSTRAINTS, RUNOFF MAY BE CONVEYED TO THE STREET AND THE STORM DRAIN SYSTEM PROVIDED THAT AN APPROVED FILTERING SYSTEM IS INSTALLED AND MAINTAINED ON-SITE DURING THE CONSTRUCTION DURATION.
21. REFER TO SD SHEETS FOR DRAIN LOCATIONS AND PIPING.
22. REFER TO A SHEETS FOR RESTROOM DETAILS AND ELEVATIONS.
23. SEE E SHEETS FOR LIGHT POLE AND ELECTRICAL EQUIPMENT LAYOUT AND DETAILS
24. REFER TO SP SHEETS FOR STRIPING AND FENCING LAYOUT AND DETAILS
25. PATHWAY LONGITUDINAL SLOPES NOT TO EXCEED 5%. PATHWAY CROSS-SLOPES AND PLAZA SLOPES NOT TO EXCEED 2% IN ANY DIRECTION. ADA RAMP LONGITUDINAL SLOPE NOT TO EXCEED 8.3%. PAVED AREAS SHALL BE SLOPED TO DRAIN WITH A MINIMUM SLOPE OF 0.5%. PLANTED AREAS SHALL HAVE A MINIMUM SLOPE OF 2% AND A MAXIMUM SLOPE OF 33%. NOTIFY ENGINEER IMMEDIATELY OF ANY DISCREPANCIES BETWEEN THESE RULES AND GIVEN SPOT GRADES.
26. NO FILL SHALL BE PLACED UNTIL THE CITY GRADING INSPECTOR HAS INSPECTED AND APPROVED THE BOTTOM EXCAVATION FOR ALL STRUCTURAL FOUNDATIONS.
27. MAN-MADE FILL SHALL BE COMPACTED TO A MINIMUM RELATIVE COMPACTION OF 90% MAXIMUM DRY DENSITY WITHIN 40 FEET BELOW FINISHED GRADE AND 93% OF MAXIMUM DRY DESNITY DEEPER THAN 40 FEET BELOW FINSIHED GRADE, UNLESS A LOWER RELATIVE COMPACTION (NOT LESS THAN 90% OF MAXIMUM DRY DENSITY) IS JUSTIFIED BY THE SOILS ENGINEER.
28. TEMPORARY EROSION CONTROL SHALL BE INSTALLED BETWEEN OCTOBER 1 AND APRIL 15. OBTAIN GRADING INSPECTOR'S AND DEPARTMENT OF PUBLIC WORKS APPROVAL OF PROPOSED PROCEDURES (7007.1)
29. OBTAIN REQUIRED PERMITS FROM THE CALIFORNIA DIVISION OF INDUSTRIAL SAFETY FOR CONSTRUCTION OF TRENCHES AND EXCAVATIONS OVER 5 FEET DEEP. SUBMIT PROOF OF PERMIT TO THE INSPECTOR AND ENGINEER. TRENCHING SHALL COMPLY WITH STANDARD PLAN 477-1.

LEGEND:

- TERMINAL PAVEMENT (1GP-20, TYPE 1)
- ENTRY ROAD PAVEMENT (1GP-20, TYPE 2)
- PHL MAINTENANCE ROAD PAVEMENT (1GP-20, TYPE 3)
- UNPAVED / CMB (4GP-20, TYPE 5)
- CONCRETE PAVEMENT (2GP-20, TYPE 4)

EARTHWORK ESTIMATE:

1. CUT: 229,292 CY (EXPORT)
2. FILL: 81,339 CY

LEGEND OF CONSTRUCTION NOTES

COORDINATE	
CONSTRUCT	REMODEL EXISTING
EXISTING	REMOVE AND CONSTRUCT
REMOVE	RELOCATE
NOT IN CONTRACT	ABANDON

200' 0' 200' 400'
SCALE: 1" = 200'

NO.	DATE	DRAWN	REVISIONS -	CHK'D	APP'D
A	3/20/25	-	30% CONCEPTUAL DESIGN		
B	4/25/25	-	FINAL CONCEPTUAL DESIGN		
C	7/18/25	-	40% DESIGN		
D	9/19/25	-	80% DESIGN		

NOT FOR CONSTRUCTION

NO.	DATE	DRAWN	REVISIONS -	CHK'D	APP'D

80% DESIGN REVIEW
SEP 19 , 2025

Jacobs
2900 MICHELSON DRIVE, SUITE 500
IRVINE, CA 92612
T: (949) 224-7500
F: (949) 224-7501

REGISTERED PROFESSIONAL ENGINEER
MICHAEL S. MCAMIS
No. 60573
CIVIL
STATE OF CALIFORNIA

SCALE: 1"=200'
DRAWN: E. FLORES
CHECKED: G. NGUYEN
DESIGNED: S. MCAMIS
ENGINEER / ARCHITECT

TERMINAL ISLAND MARITIME SUPPORT FACILITY

GRADING & PAVING KEY PLAN AND NOTES

THE PORT OF LOS ANGELES
ENGINEERING DIVISION
425 S. PALOS VERDES STREET SAN PEDRO CA 90731-3309

DRAWING NUMBER: 1-3513
SHEET NUMBER: GP-01

POLAPRDY_042023_BW.D

GRADING & PAVING CONSTRUCTION NOTES:

LEGEND OF CONSTRUCTION NOTES		
EXISTING/PROTECT	CONSTRUCT	
No.	CONSTRUCTION ITEM	REFERENCE DWG
8	CONCRETE PAVEMENT	2GP-20
14	ASPHALT CONCRETE PAVEMENT	1GP-20
16	CRUSHED MISC BASE (CMB)	4GP-20

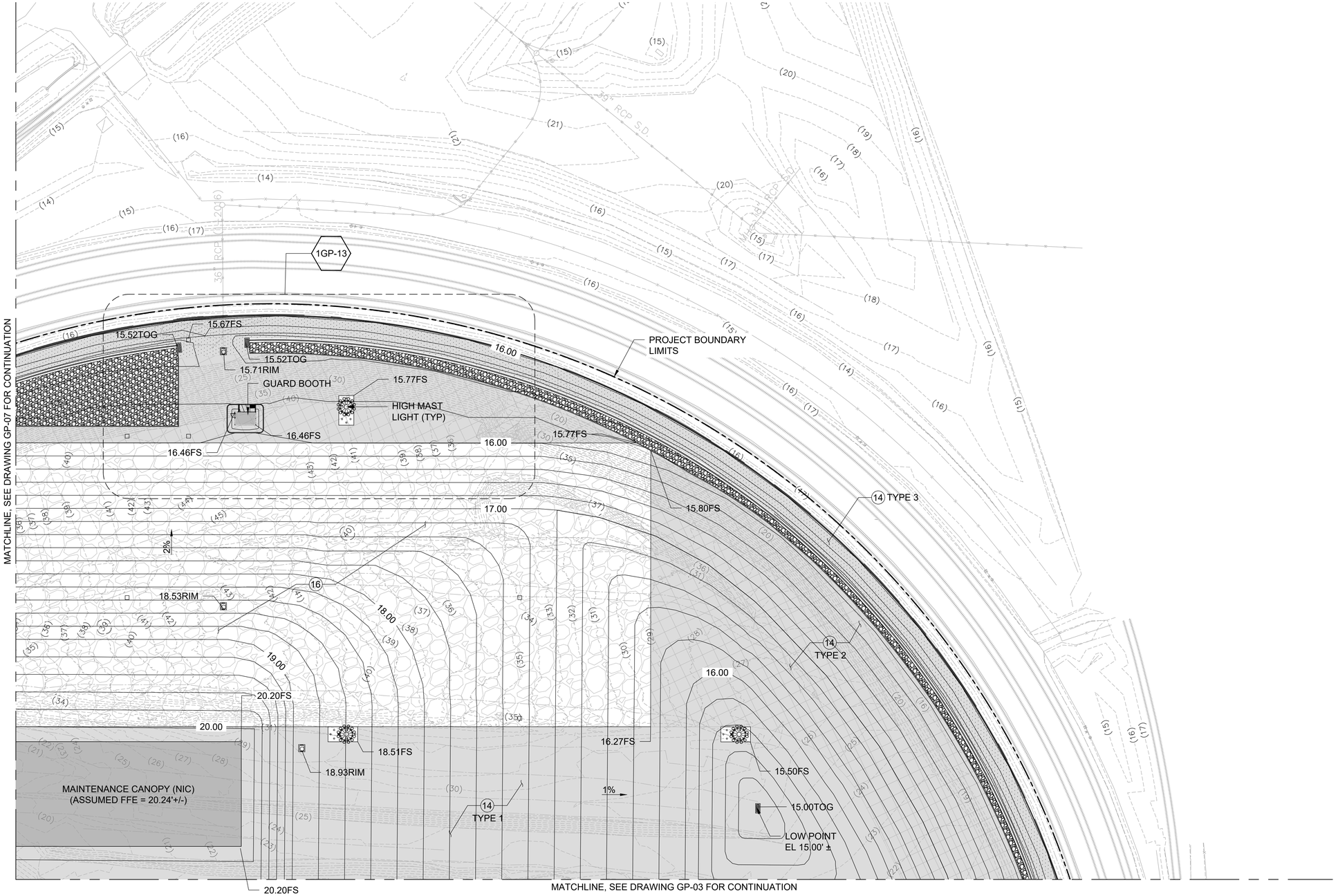

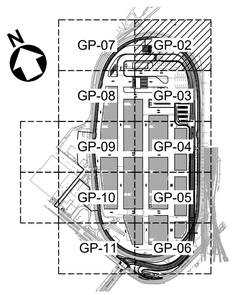

KEY MAP

40' 0' 40' 80'

SCALE: 1" = 40'

1GP-02 / GP-02 GRADING & PAVING PLAN - AREA 1

SCALE: 1" = 40'

NO.	DATE	DRAWN	REVISIONS -	CHK'D	APP'D
C	7/18/25	-	40% DESIGN		
D	9/19/25	-	80% DESIGN		

NOT FOR CONSTRUCTION

NO.	DATE	DRAWN	REVISIONS -	CHK'D	APP'D

80% DESIGN REVIEW
SEP 19 , 2025

Jacobs
2900 MICHELSON DRIVE, SUITE 500
IRVINE, CA 92612
T: (949) 224-7500
F: (949) 224-7501

REGISTERED PROFESSIONAL ENGINEER
MICHAEL S. MCAMIS
No. 60573
CIVIL
STATE OF CALIFORNIA

SCALE: 1"=40'
DRAWN: E. FLORES
CHECKED: G. NGUYEN
DESIGNED: S. MCAMIS
ENGINEER / ARCHITECT

TERMINAL ISLAND MARITIME SUPPORT FACILITY

GRADING & PAVING PLAN - AREA 1

THE PORT OF LOS ANGELES
ENGINEERING DIVISION
425 S. PALOS VERDES STREET SAN PEDRO CA 90731-3309

DRAWING NUMBER: 1-3513
SHEET NUMBER: GP-02

POLAPRDT_04/2023_BWD

MATCHLINE, SEE DRAWING GP-03 FOR CONTINUATION

GRADING & PAVING CONSTRUCTION NOTES:

LEGEND OF CONSTRUCTION NOTES		
EXISTING/PROTECT	CONSTRUCT	
No.	CONSTRUCTION ITEM	REFERENCE DWG
8	CONCRETE PAVEMENT	2GP-20
14	ASPHALT CONCRETE PAVEMENT	1GP-20
16	CRUSHED MISC BASE (CMB)	4GP-20



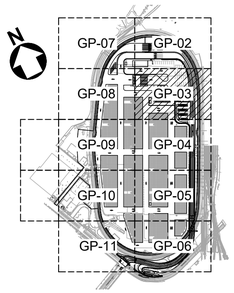

KEY MAP

40' 0' 40' 80'

SCALE: 1" = 40'

1GP-03
GP-03

GRADING & PAVING PLAN - AREA 2

SCALE: 1" = 40'

NO.	DATE	DRAWN	REVISIONS -	CHK'D	APP'D
C	7/18/25	-	40% DESIGN		
D	9/19/25	-	80% DESIGN		

NOT FOR CONSTRUCTION

80% DESIGN REVIEW
SEP 19 , 2025

Jacobs
2600 MICHELSON DRIVE, SUITE 500
IRVINE, CA 92612
T: (949) 224-7500
F: (949) 224-7501

REGISTERED PROFESSIONAL ENGINEER
MICHAEL S. McAMIS
No. 60573
CIVIL
STATE OF CALIFORNIA

SCALE:	1"=40'
DRAWN:	E. FLORES
CHECKED:	G. NGUYEN
DESIGNED:	S. MCAMIS
	ENGINEER / ARCHITECT

TERMINAL ISLAND MARITIME SUPPORT FACILITY

GRADING & PAVING PLAN - AREA 2

THE PORT OF LOS ANGELES
ENGINEERING DIVISION
425 S. PALOS VERDES STREET SAN PEDRO CA 90731-3309

DRAWING NUMBER: 1-3513
SHEET NUMBER: GP-03

POLAPRO1_04.0223_BWD

MATCHLINE, SEE DRAWING GP-03 FOR CONTINUATION

MATCHLINE, SEE DRAWING GP-09 FOR CONTINUATION

MATCHLINE, SEE DRAWING GP-05 FOR CONTINUATION

15.50TOG
16.40FS
HIGH MAST LIGHT (TYP)
18.59FS
14 TYPE 1
14 TYPE 2
14 TYPE 3
PROJECT BOUNDARY LIMITS
17.00
16.00
16.00
17.00
18.00
19.00
18.00
17.00
16.00
17.30RIM
1%
1%
2%
15.50TOG
16.40FS
18.57FS
16.55RIM
17.00FS
15.98RIM
18.63RIM
16.95FS
17.07RIM
15.80TOG
16.80FS TIGS CROWN
15.50TOG
LOW POINT EL 15.50' ± (TYP)
16.49RIM
16.25TOG
LOW POINT EL 16.25' ± (TYP)
TERMINAL ISLAND GRADE SEPARATION (NIC) (SEE DRAWING 1-3497)
1.5%
16.00
15.50TOG
16.45FS
18.55FS
8

GRADING & PAVING CONSTRUCTION NOTES:

LEGEND OF CONSTRUCTION NOTES

EXISTING/PROTECT CONSTRUCT

No.	CONSTRUCTION ITEM	REFERENCE DWG
8	CONCRETE PAVEMENT	2GP-20
14	ASPHALT CONCRETE PAVEMENT	1GP-20
16	CRUSHED MISC BASE (CMB)	4GP-20

N

GP-07 GP-02 GP-08 GP-03 GP-09 GP-04 GP-10 GP-05 GP-11 GP-06

KEY MAP

40' 0' 40' 80'

SCALE: 1" = 40'

1GP-04 / GP-04 GRADING & PAVING PLAN - AREA 3

SCALE: 1" = 40'

NO.	DATE	DRAWN	REVISIONS -	CHK'D	APP'D
C	7/18/25	-	40% DESIGN		
D	9/19/25	-	80% DESIGN		

NOT FOR CONSTRUCTION

NO.	DATE	DRAWN	REVISIONS -	CHK'D	APP'D

80% DESIGN REVIEW SEP 19 , 2025

Jacobs
2600 MICHELSON DRIVE, SUITE 500
IRVINE, CA 92612
T: (949) 224-7500
F: (949) 224-7501

REGISTERED PROFESSIONAL ENGINEER MICHAEL S. McANIS No. 60573 CIVIL STATE OF CALIFORNIA

SCALE: 1"=40'
DRAWN: E. FLORES
CHECKED: G. NGUYEN
DESIGNED: S. MCAMIS
ENGINEER / ARCHITECT

TERMINAL ISLAND MARITIME SUPPORT FACILITY

GRADING & PAVING PLAN - AREA 3

THE PORT OF LOS ANGELES
ENGINEERING DIVISION
425 S. PALOS VERDES STREET SAN PEDRO CA 90731-3309

DRAWING NUMBER 1-3513
SHEET NUMBER GP-04

POLARIS1_040320_BWD

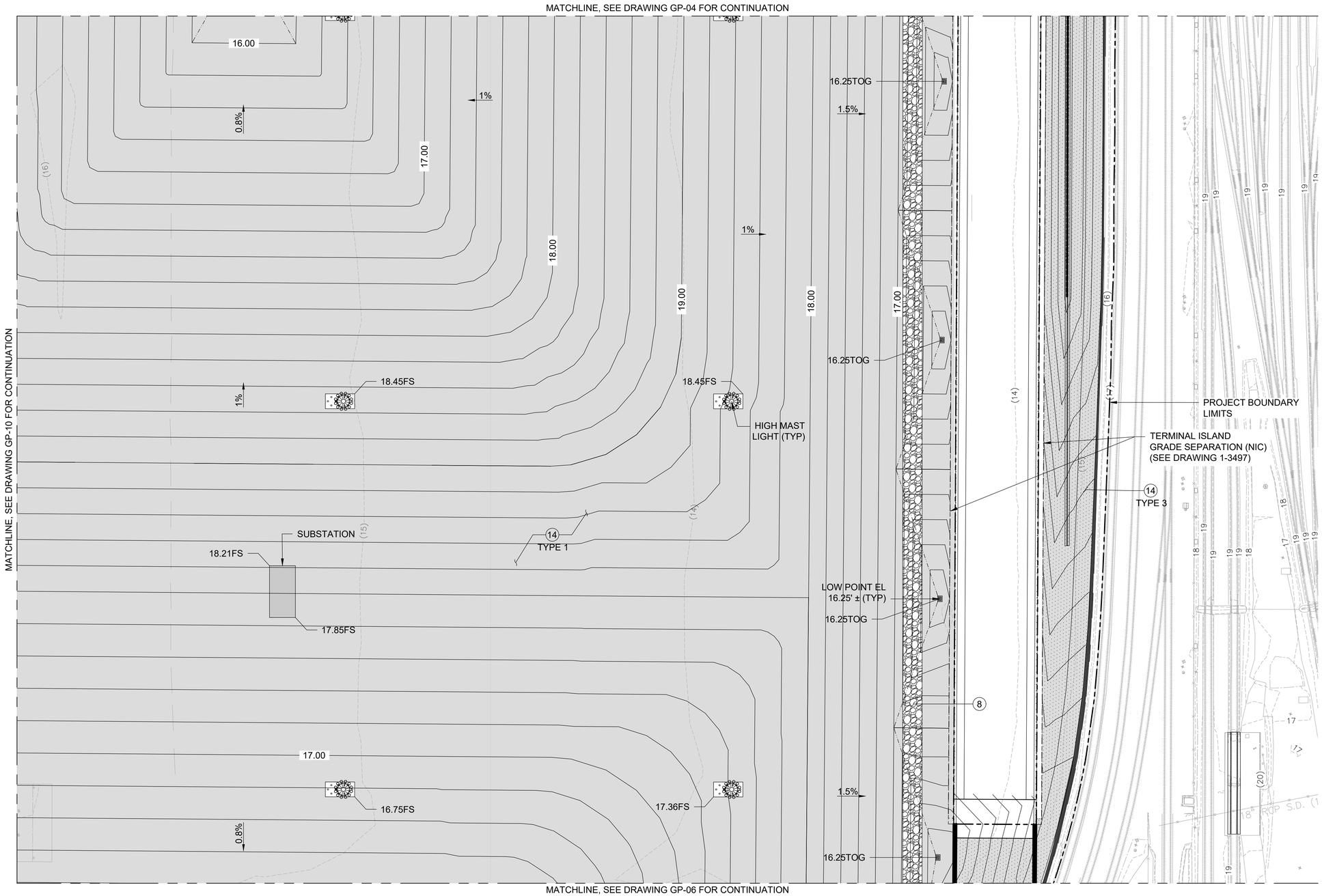

GRADING & PAVING CONSTRUCTION NOTES:

LEGEND OF CONSTRUCTION NOTES		
EXISTING/PROTECT		CONSTRUCT
No.	CONSTRUCTION ITEM	REFERENCE DWG
8	CONCRETE PAVEMENT	2GP-20
14	ASPHALT CONCRETE PAVEMENT	1GP-20
16	CRUSHED MISC BASE (CMB)	4GP-20

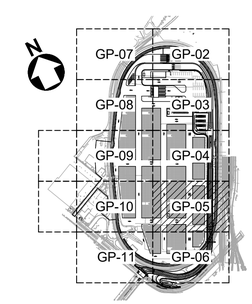

KEY MAP

1GP-05 / GP-05 GRADING & PAVING PLAN - AREA 4
SCALE: 1" = 40'

40' 0' 40' 80'
SCALE: 1" = 40'

NO.	DATE	DRAWN	REVISIONS -	CHK'D	APP'D
C	7/18/25	-	40% DESIGN		
D	9/19/25	-	80% DESIGN		

NOT FOR CONSTRUCTION

NO.	DATE	DRAWN	REVISIONS -	CHK'D	APP'D
			80% DESIGN REVIEW SEP 19 , 2025		

Jacobs
2600 MICHELSON DRIVE, SUITE 500
IRVINE, CA 92612
T: (949) 224-7500
F: (949) 224-7501

REGISTERED PROFESSIONAL ENGINEER MICHAEL S. McAMIS No. 60573 CIVIL STATE OF CALIFORNIA

SCALE: 1"=40'
DRAWN: E. FLORES
CHECKED: G. NGUYEN
DESIGNED: S. MCAMIS
ENGINEER / ARCHITECT

TERMINAL ISLAND MARITIME SUPPORT FACILITY

GRADING & PAVING PLAN - AREA 4

THE PORT OF LOS ANGELES
ENGINEERING DIVISION
425 S. PALOS VERDES STREET SAN PEDRO CA 90731-3309

DRAWING NUMBER 1-3513
SHEET NUMBER GP-05

POLAPRO1_04/2023_BWD

MATCHLINE, SEE DRAWING GP-05 FOR CONTINUATION

MATCHLINE, SEE DRAWING GP-11 FOR CONTINUATION

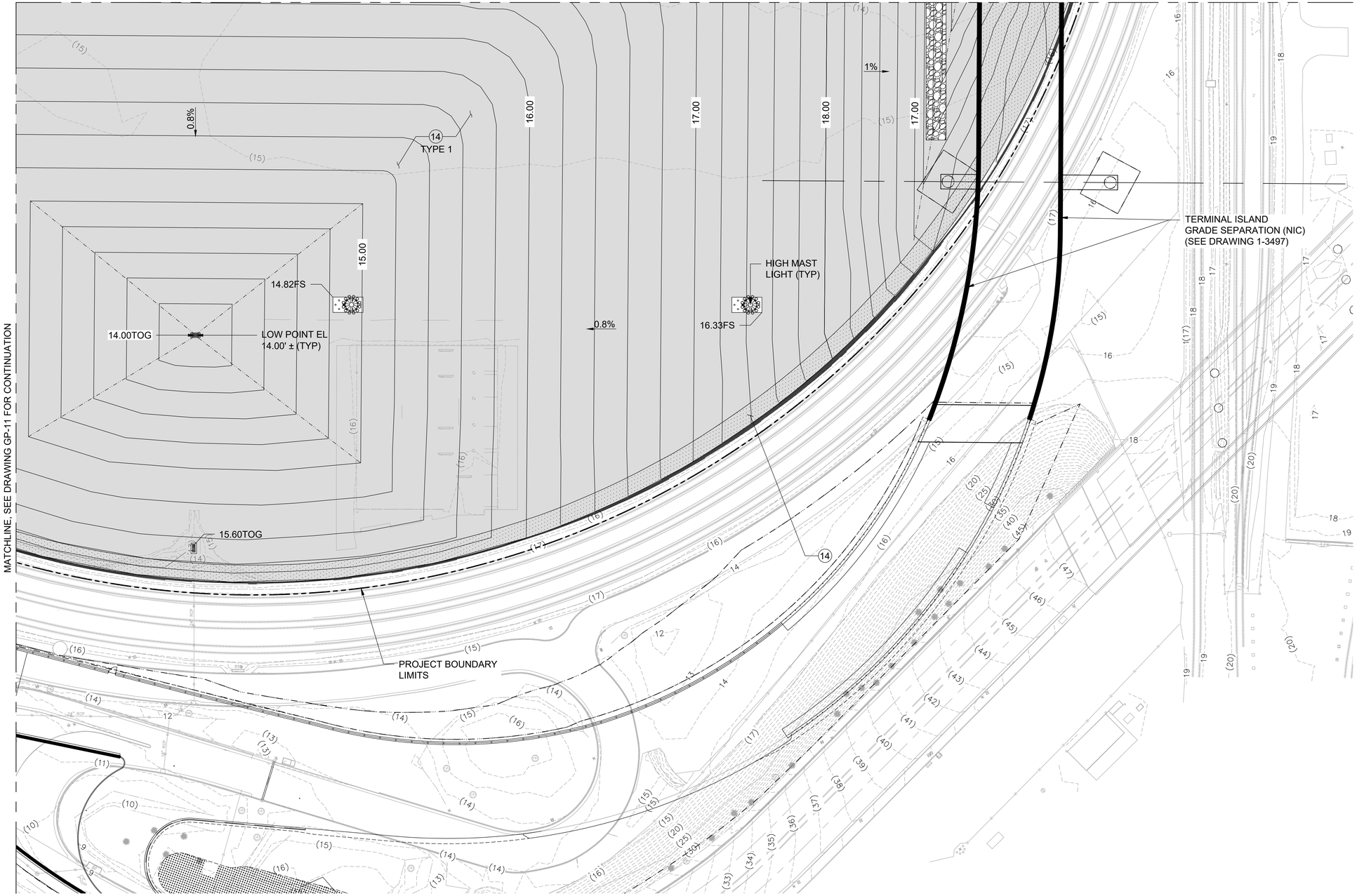

GRADING & PAVING CONSTRUCTION NOTES:

LEGEND OF CONSTRUCTION NOTES		
EXISTING/PROTECT	CONSTRUCT	
No.	CONSTRUCTION ITEM	REFERENCE DWG
8	CONCRETE PAVEMENT	2GP-20
14	ASPHALT CONCRETE PAVEMENT	1GP-20
16	CRUSHED MISC BASE (CMB)	4GP-20

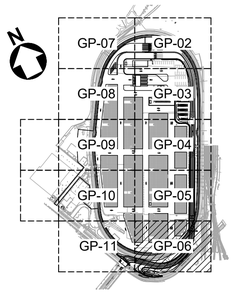

KEY MAP

40' 0' 40' 80'

SCALE: 1" = 40'

1GP-06
GP-06

GRADING & PAVING PLAN - AREA 5

SCALE: 1" = 40'

N

NO.	DATE	DRAWN	REVISIONS -	CHK'D	APP'D
C	7/18/25	-	40% DESIGN		
D	9/19/25	-	80% DESIGN		

NOT FOR CONSTRUCTION

NO.	DATE	DRAWN	REVISIONS -	CHK'D	APP'D

80% DESIGN REVIEW
SEP 19 , 2025

Jacobs
3600 MICHELSON DRIVE, SUITE 600
IRVINE, CA 92612
T: (949) 224-7500
F: (949) 224-7501

REGISTERED PROFESSIONAL ENGINEER
MICHAEL S. MCAMIS
No. 60573
CIVIL
STATE OF CALIFORNIA

SCALE:	1"=40'
DRAWN:	E. FLORES
CHECKED:	G. NGUYEN
DESIGNED:	S. MCAMIS
	ENGINEER / ARCHITECT

TERMINAL ISLAND MARITIME SUPPORT FACILITY

GRADING & PAVING PLAN - AREA 5

THE PORT OF LOS ANGELES
ENGINEERING DIVISION
425 S. PALOS VERDES STREET SAN PEDRO CA 90731-3309

DRAWING NUMBER: 1-3513

SHEET NUMBER: GP-06

POLAPRD1_04/2023_BWD

GRADING & PAVING CONSTRUCTION NOTES:

LEGEND OF CONSTRUCTION NOTES		
EXISTING/PROTECT	CONSTRUCT	
No.	CONSTRUCTION ITEM	REFERENCE DWG
8	CONCRETE PAVEMENT	2GP-20
14	ASPHALT CONCRETE PAVEMENT	1GP-20
16	CRUSHED MISC BASE (CMB)	4GP-20

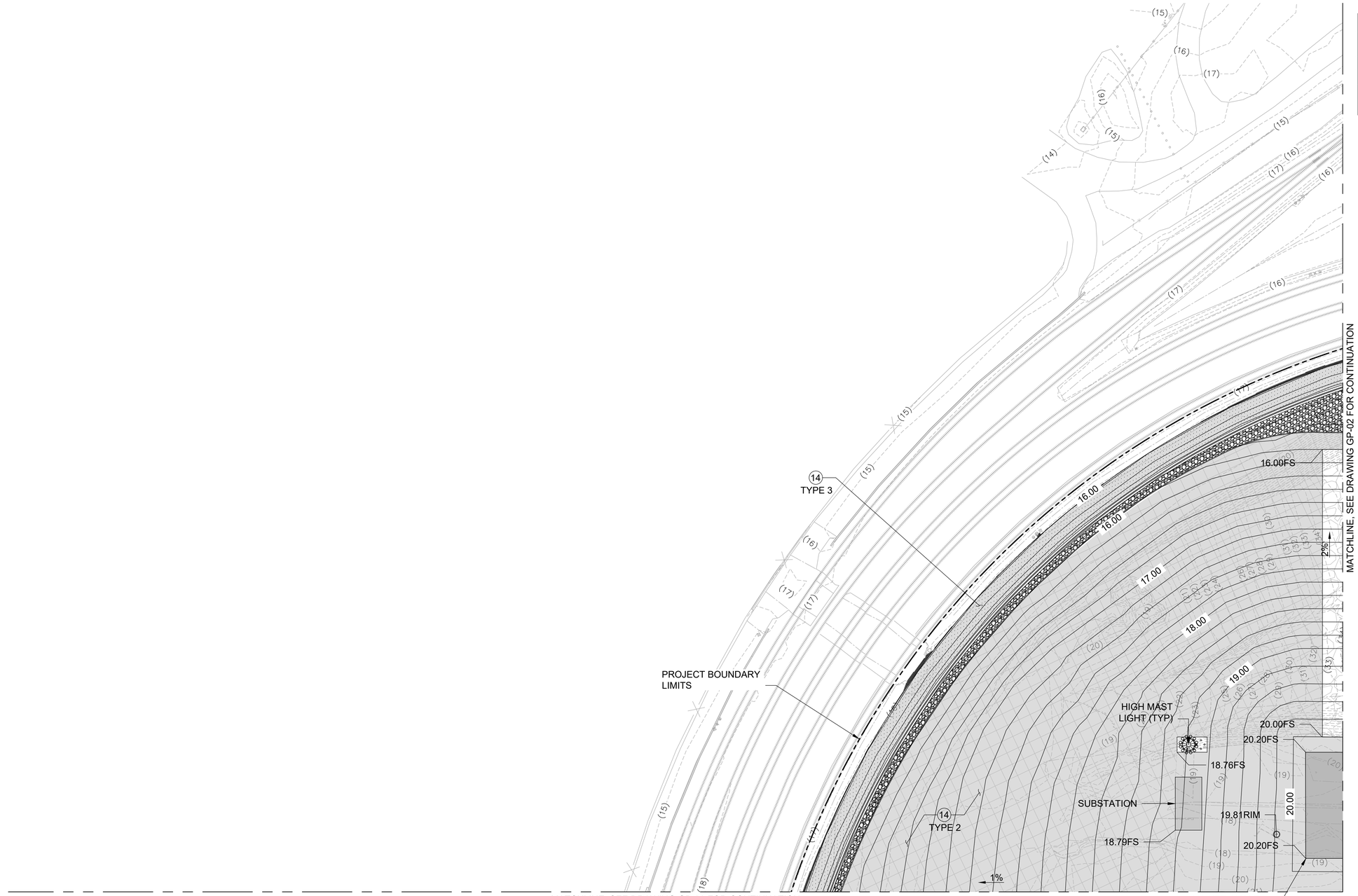

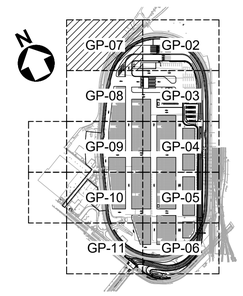

KEY MAP

40' 0' 40' 80'

SCALE: 1" = 40'

1GP-07 / GP-07 GRADING & PAVING PLAN - AREA 6

SCALE: 1" = 40'

NO.	DATE	DRAWN	REVISIONS -	CHK'D	APP'D
C	7/18/25	-	40% DESIGN		
D	9/19/25	-	80% DESIGN		

NOT FOR CONSTRUCTION

NO.	DATE	DRAWN	REVISIONS -	CHK'D	APP'D

80% DESIGN REVIEW
SEP 19 , 2025

Jacobs
2041 MICHELSON DRIVE, SUITE 500
IRVINE, CA 92612
T: (949) 224-7500
F: (949) 224-7501

REGISTERED PROFESSIONAL ENGINEER
MICHAEL S. MCAMIS
No. 60573
CIVIL
STATE OF CALIFORNIA

SCALE:	1"=40'
DRAWN:	E. FLORES
CHECKED:	G. NGUYEN
DESIGNED:	S. MCAMIS
	ENGINEER / ARCHITECT

TERMINAL ISLAND MARITIME SUPPORT FACILITY

GRADING & PAVING PLAN - AREA 6

THE PORT OF LOS ANGELES
ENGINEERING DIVISION
425 S. PALOS VERDES STREET SAN PEDRO CA 90731-3309

DRAWING NUMBER	SHEET NUMBER
1-3513	GP-07

POLAPRO1_04/2023_BWD

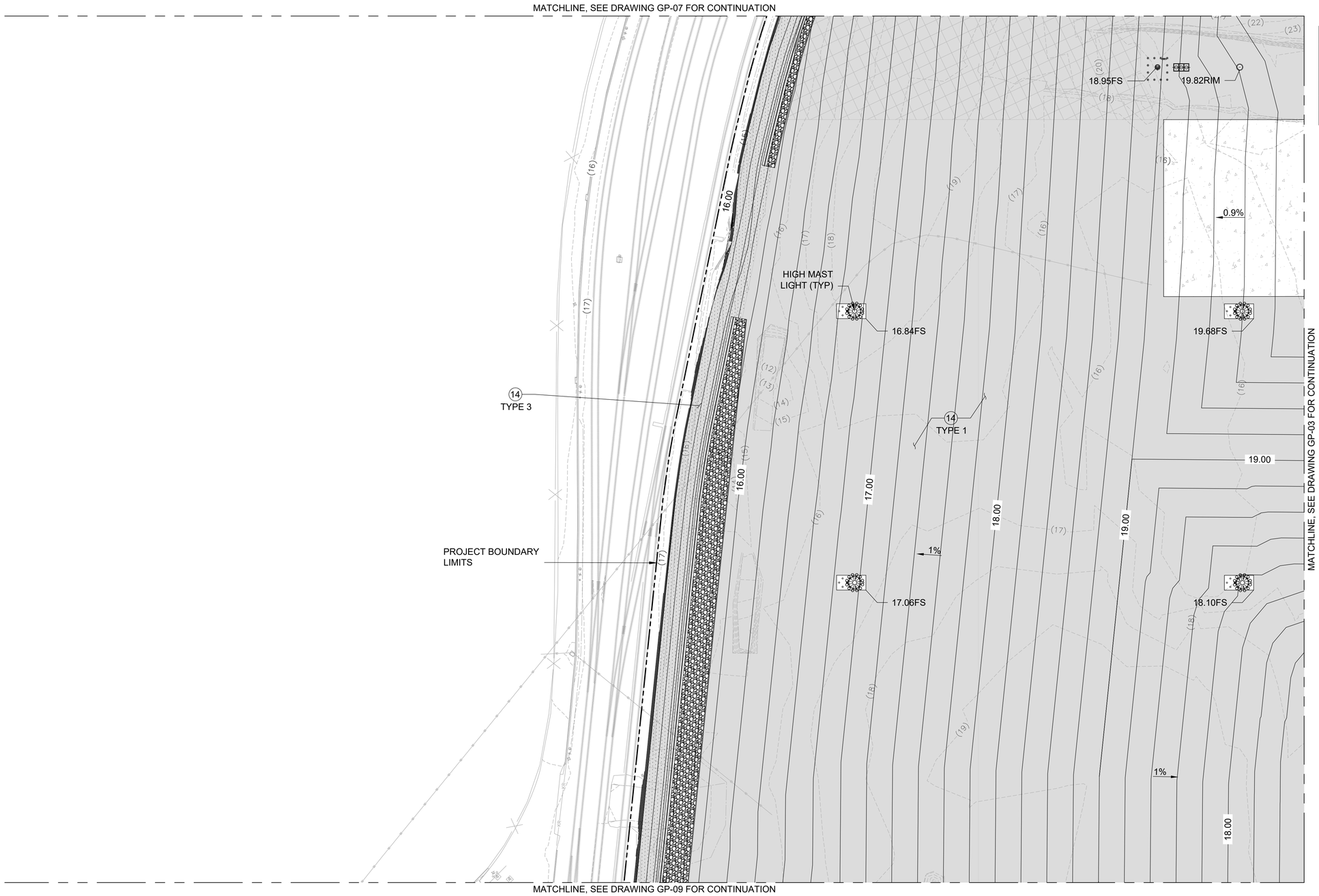

GRADING & PAVING CONSTRUCTION NOTES:

LEGEND OF CONSTRUCTION NOTES

EXISTING/PROTECT CONSTRUCT

No.	CONSTRUCTION ITEM	REFERENCE DWG
8	CONCRETE PAVEMENT	2GP-20
14	ASPHALT CONCRETE PAVEMENT	1GP-20
16	CRUSHED MISC BASE (CMB)	4GP-20

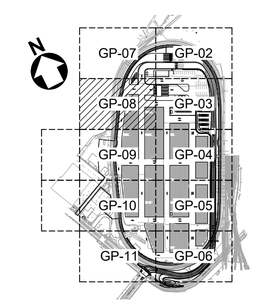

KEY MAP

1GP-08 / GP-08 GRADING & PAVING PLAN - AREA 7

SCALE: 1" = 40'

40' 0' 40' 80'

SCALE: 1" = 40'

NO.	DATE	DRAWN	REVISIONS -	CHK'D	APP'D
C	7/18/25	-	40% DESIGN		
D	9/19/25	-	80% DESIGN		

NOT FOR CONSTRUCTION

NO.	DATE	DRAWN	REVISIONS -	CHK'D	APP'D

80% DESIGN REVIEW
SEP 19 , 2025

Jacobs
2600 MICHELSON DRIVE, SUITE 500
IRVINE, CA 92612
T: (949) 224-7500
F: (949) 224-7501

REGISTERED PROFESSIONAL ENGINEER
MICHAEL S. McAMIS
No. 60573
CIVIL
STATE OF CALIFORNIA

SCALE: 1"=40'
DRAWN: E. FLORES
CHECKED: G. NGUYEN
DESIGNED: S. MCAMIS
ENGINEER / ARCHITECT

TERMINAL ISLAND MARITIME SUPPORT FACILITY

GRADING & PAVING PLAN - AREA 7

THE PORT OF LOS ANGELES
ENGINEERING DIVISION
425 S. PALOS VERDES STREET SAN PEDRO CA 90731-3309

DRAWING NUMBER 1-3513

SHEET NUMBER GP-08

POLAPRO1_04/2023_BWD

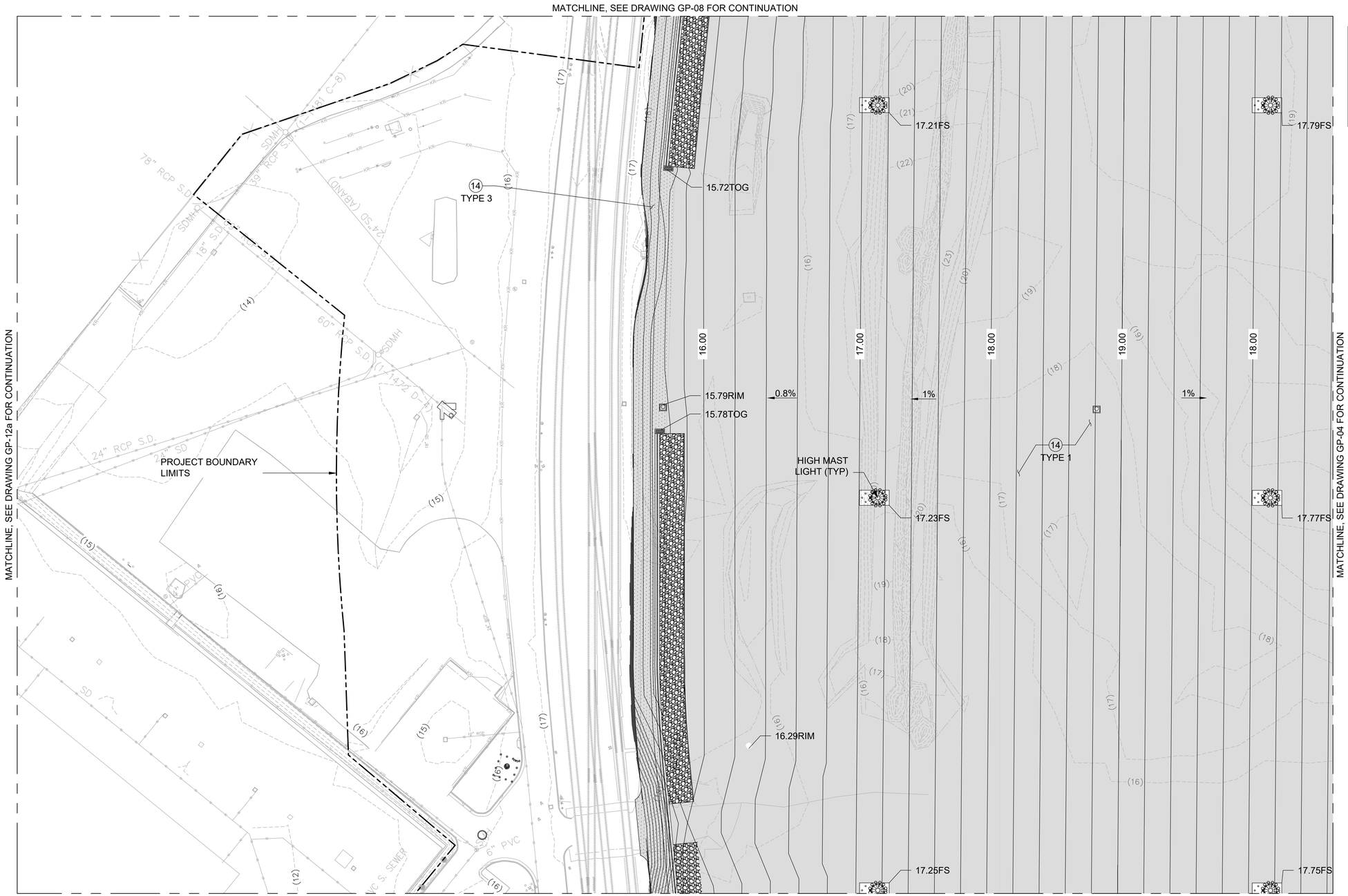

GRADING & PAVING CONSTRUCTION NOTES:

LEGEND OF CONSTRUCTION NOTES		
EXISTING/PROTECT		CONSTRUCT
No.	CONSTRUCTION ITEM	REFERENCE DWG
8	CONCRETE PAVEMENT	2GP-20
14	ASPHALT CONCRETE PAVEMENT	1GP-20
16	CRUSHED MISC BASE (CMB)	4GP-20

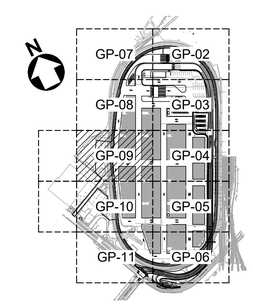

KEY MAP

1GP-09 / GP-09 GRADING & PAVING PLAN - AREA 8
SCALE: 1" = 40'

40' 0' 40' 80'
SCALE: 1" = 40'

NO.	DATE	DRAWN	REVISIONS -	CHK'D	APP'D
C	7/18/25	-	40% DESIGN		
D	9/19/25	-	80% DESIGN		

NOT FOR CONSTRUCTION

NO.	DATE	DRAWN	REVISIONS -	CHK'D	APP'D

80% DESIGN REVIEW
SEP 19 , 2025

Jacobs
2600 MICHELSON DRIVE, SUITE 500
IRVINE, CA 92612
T: (949) 224-7500
F: (949) 224-7501

REGISTERED PROFESSIONAL ENGINEER
MICHAEL S. McAMIS
No. 60573
CIVIL
STATE OF CALIFORNIA

SCALE: 1"=40'
DRAWN: E. FLORES
CHECKED: G. NGUYEN
DESIGNED: S. MCAMIS
ENGINEER / ARCHITECT

TERMINAL ISLAND MARITIME SUPPORT FACILITY

GRADING & PAVING PLAN - AREA 8

THE PORT OF LOS ANGELES
ENGINEERING DIVISION
425 S. PALOS VERDES STREET SAN PEDRO CA 90731-3309

DRAWING NUMBER 1-3513
SHEET NUMBER GP-09

POLAPRO1_04/2023_BWD

MATCHLINE, SEE DRAWING GP-09 FOR CONTINUATION

MATCHLINE, SEE DRAWING GP-12b FOR CONTINUATION

MATCHLINE, SEE DRAWING GP-05 FOR CONTINUATION

MATCHLINE, SEE DRAWING GP-11 FOR CONTINUATION

GRADING & PAVING CONSTRUCTION NOTES:

LEGEND OF CONSTRUCTION NOTES

EXISTING/PROTECT CONSTRUCT

No.	CONSTRUCTION ITEM	REFERENCE DWG
8	CONCRETE PAVEMENT	2GP-20
14	ASPHALT CONCRETE PAVEMENT	1GP-20
16	CRUSHED MISC BASE (CMB)	4GP-20

PROJECT BOUNDARY LIMITS

TRANSFORMER STATION

TANK

6" PVC S. SEWER

SD

SMH

TYPE 3

TYPE 1

HIGH MAST LIGHT (TYP)

16.81FS

18.67FS

16.55FS

16.73FS

17.00

18.00

19.00

16.00

1%

0.8%

1GP-10
GP-10

GRADING & PAVING PLAN - AREA 9

SCALE: 1" = 40'

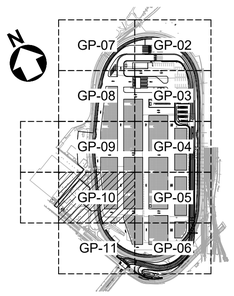

KEY MAP

40' 0' 40' 80'

SCALE: 1" = 40'

NO.	DATE	DRAWN	REVISIONS -	CHK'D	APP'D
C	7/18/25	-	40% DESIGN		
D	9/19/25	-	80% DESIGN		

NOT FOR CONSTRUCTION

NO.	DATE	DRAWN	REVISIONS -	CHK'D	APP'D

80% DESIGN REVIEW
SEP 19 , 2025

Jacobs
2600 MICHELSON DRIVE, SUITE 500
IRVINE, CA 92612
T: (949) 224-7500
F: (949) 224-7501

REGISTERED PROFESSIONAL ENGINEER
MICHAEL S. McAMIS
No. 60573
CIVIL
STATE OF CALIFORNIA

SCALE: 1"=40'
DRAWN: E. FLORES
CHECKED: G. NGUYEN
DESIGNED: S. MCAMIS
ENGINEER / ARCHITECT

TERMINAL ISLAND MARITIME SUPPORT FACILITY

GRADING & PAVING PLAN - AREA 9

THE PORT OF LOS ANGELES
ENGINEERING DIVISION
425 S. PALOS VERDES STREET SAN PEDRO CA 90731-3309

DRAWING NUMBER 1-3513

SHEET NUMBER GP-10

POLAPR01_043023_BWD

MATCHLINE, SEE DRAWING GP-10 FOR CONTINUATION

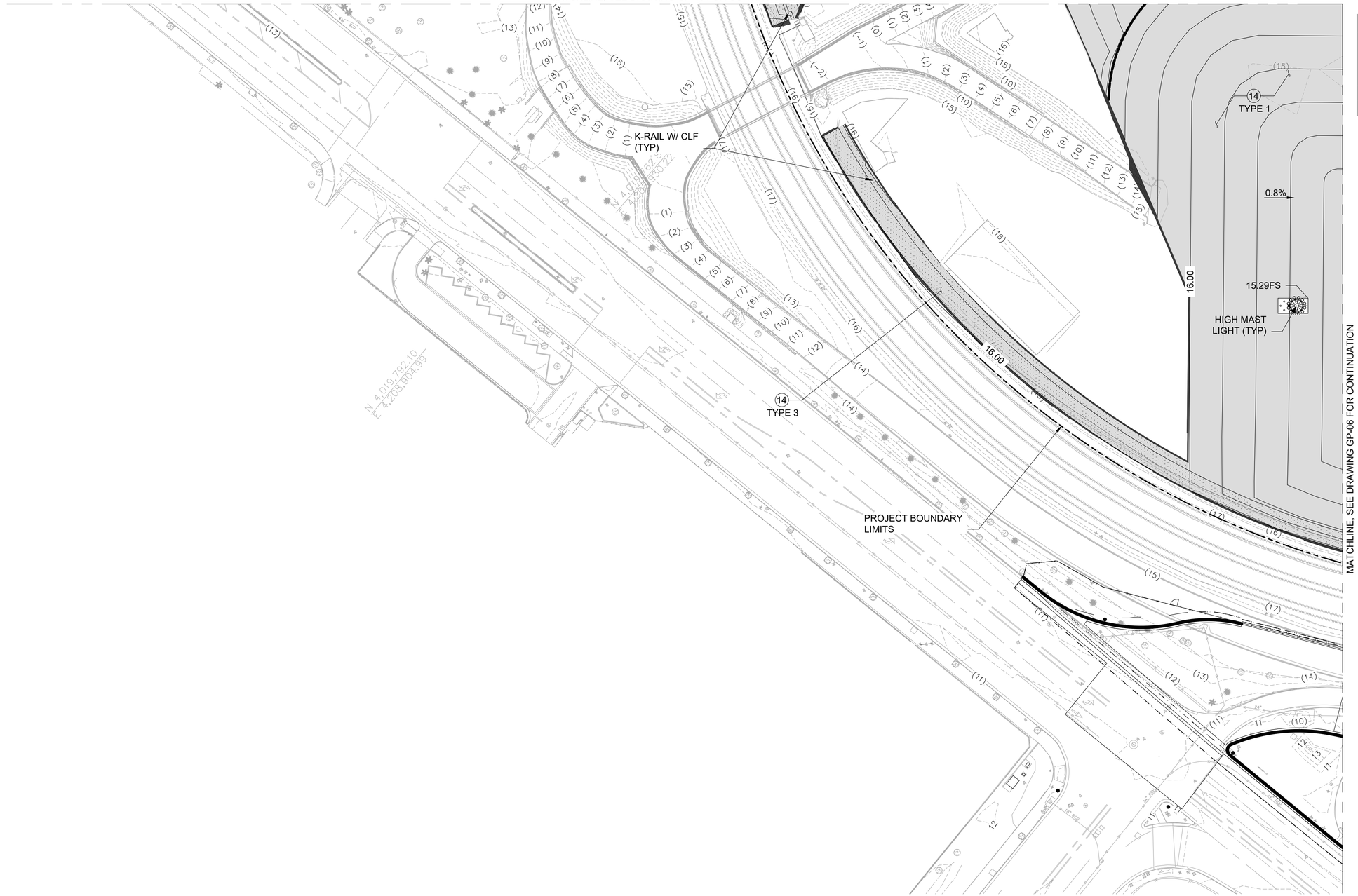

GRADING & PAVING CONSTRUCTION NOTES:

LEGEND OF CONSTRUCTION NOTES

EXISTING/PROTECT ◯ CONSTRUCT

No.	CONSTRUCTION ITEM	REFERENCE DWG
8	CONCRETE PAVEMENT	2GP-20
14	ASPHALT CONCRETE PAVEMENT	1GP-20
16	CRUSHED MISC BASE (CMB)	4GP-20

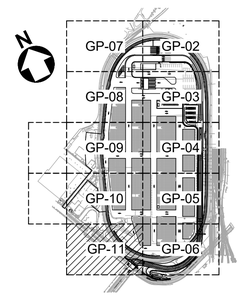

KEY MAP

40' 0' 40' 80'

SCALE: 1" = 40'

1GP-11 / GP-11 GRADING & PAVING PLAN - AREA 10

SCALE: 1" = 40'

N

NO.	DATE	DRAWN	REVISIONS -	CHK'D	APP'D
C	7/18/25	-	40% DESIGN		
D	9/19/25	-	80% DESIGN		

NOT FOR CONSTRUCTION

NO.	DATE	DRAWN	REVISIONS -	CHK'D	APP'D
			80% DESIGN REVIEW SEP 19 , 2025		

Jacobs
2600 MICHELSON DRIVE, SUITE 500
IRVINE, CA 92612
T: (949) 224-7500
F: (949) 224-7501

REGISTERED PROFESSIONAL ENGINEER — MICHAEL S. MCAMIS — No. 60573 — CIVIL — STATE OF CALIFORNIA

SCALE:	1"=40'
DRAWN:	E. FLORES
CHECKED:	G. NGUYEN
DESIGNED:	S. MCAMIS
	ENGINEER / ARCHITECT

TERMINAL ISLAND MARITIME SUPPORT FACILITY

GRADING AND PAVING PLAN - AREA 10

THE PORT OF LOS ANGELES
ENGINEERING DIVISION
425 S. PALOS VERDES STREET SAN PEDRO CA 90731-3309

DRAWING NUMBER 1-3513

SHEET NUMBER GP-11

POLAPRD1_04/2023_BW3

GRADING & PAVING CONSTRUCTION NOTES:

LEGEND OF CONSTRUCTION NOTES		
EXISTING/PROTECT	CONSTRUCT	
No.	CONSTRUCTION ITEM	REFERENCE DWG
1	CONCRETE CURB	CITY OF LA STD S-410-2
8	CONCRETE PAVEMENT	2GP-20
12	CONCRETE WALK	5GP-20
13	CURB RAMP	CITY OF LA STD S-442-6
14	ASPHALT CONCRETE PAVEMENT	1GP-20
16	CRUSHED MISC BASE (CMB)	4GP-20
251	DETECTABLE WARNING SURFACE, PER STD. PLAN S-442-6	

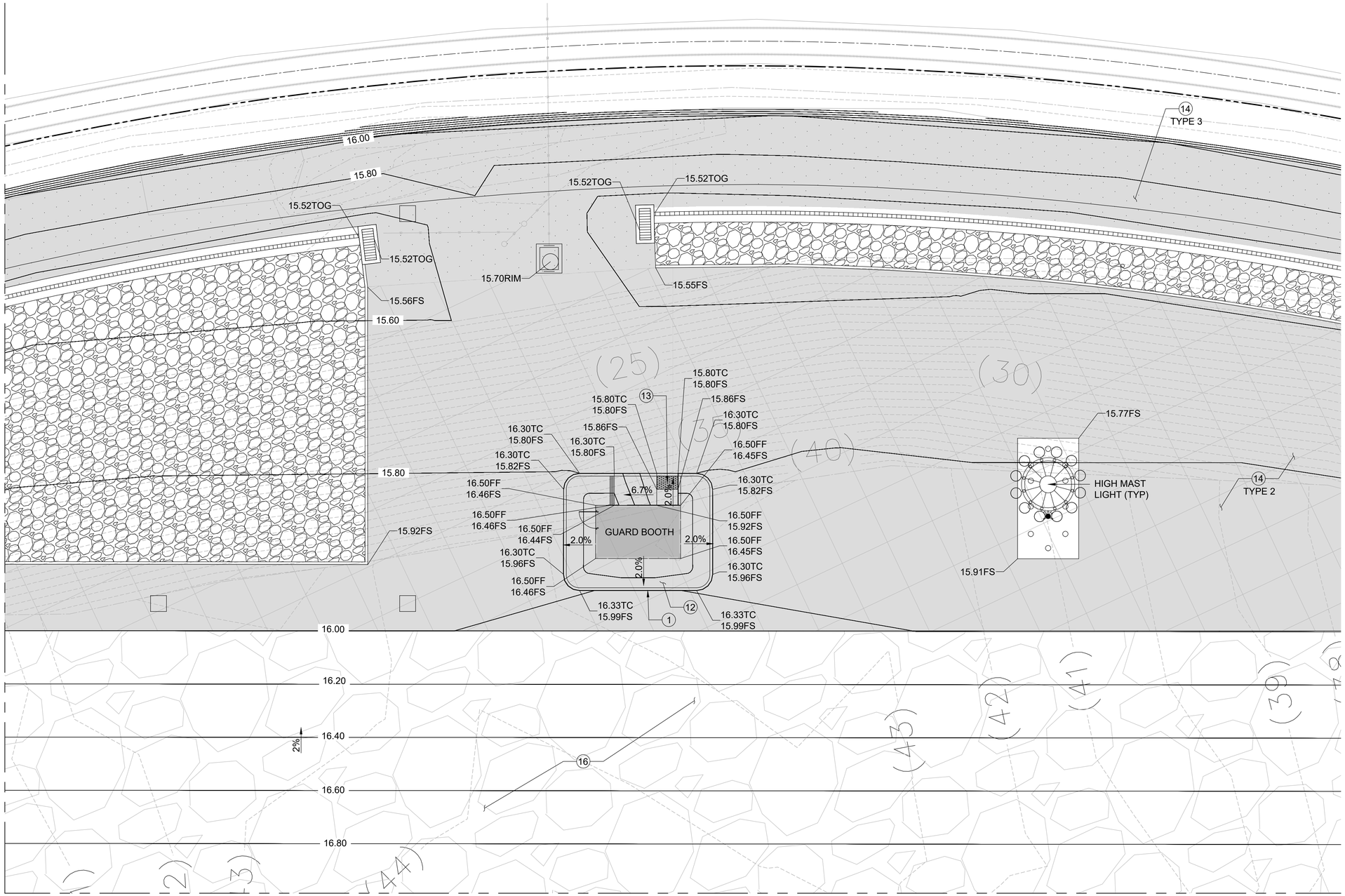

1GP-13 / GP-02 GRADING & PAVING ENLARGED PLAN
SCALE: 1" = 10'

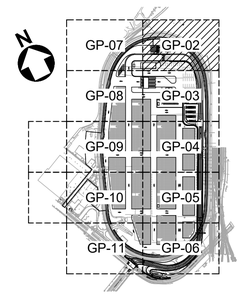

KEY MAP

10' 0' 10' 20'
SCALE: 1" = 10'

NO.	DATE	DRAWN	REVISIONS -	CHK'D	APP'D
D	9/19/25	-	80% DESIGN		

NOT FOR CONSTRUCTION

NO.	DATE	DRAWN	REVISIONS -	CHK'D	APP'D
			80% DESIGN REVIEW SEP 19 , 2025		

Jacobs
2600 MICHELSON DRIVE, SUITE 600
IRVINE, CA 92612
T: (949) 224-7500
F: (949) 224-7501

REGISTERED PROFESSIONAL ENGINEER
MICHAEL S. McAMIS
No. 60573
CIVIL
STATE OF CALIFORNIA

SCALE:	1"=10'
DRAWN:	A. TRUJILLO
CHECKED:	G. NGUYEN
DESIGNED:	S. MCAMIS
	ENGINEER / ARCHITECT

TERMINAL ISLAND MARITIME SUPPORT FACILITY

GRADING & PAVING ENLARGED PLAN

THE PORT OF LOS ANGELES
ENGINEERING DIVISION
425 S. PALOS VERDES STREET SAN PEDRO CA 90731-3309

DRAWING NUMBER	SHEET NUMBER
1-3513	GP-13

POLAPRD1_042023_BWD

GRADING & PAVING CONSTRUCTION NOTES:

LEGEND OF CONSTRUCTION NOTES		
EXISTING/PROTECT	CONSTRUCT	
No.	CONSTRUCTION ITEM	REFERENCE DWG
8	CONCRETE PAVEMENT	2GP-20
14	ASPHALT CONCRETE PAVEMENT	1GP-20
16	CRUSHED MISC BASE (CMB)	4GP-20

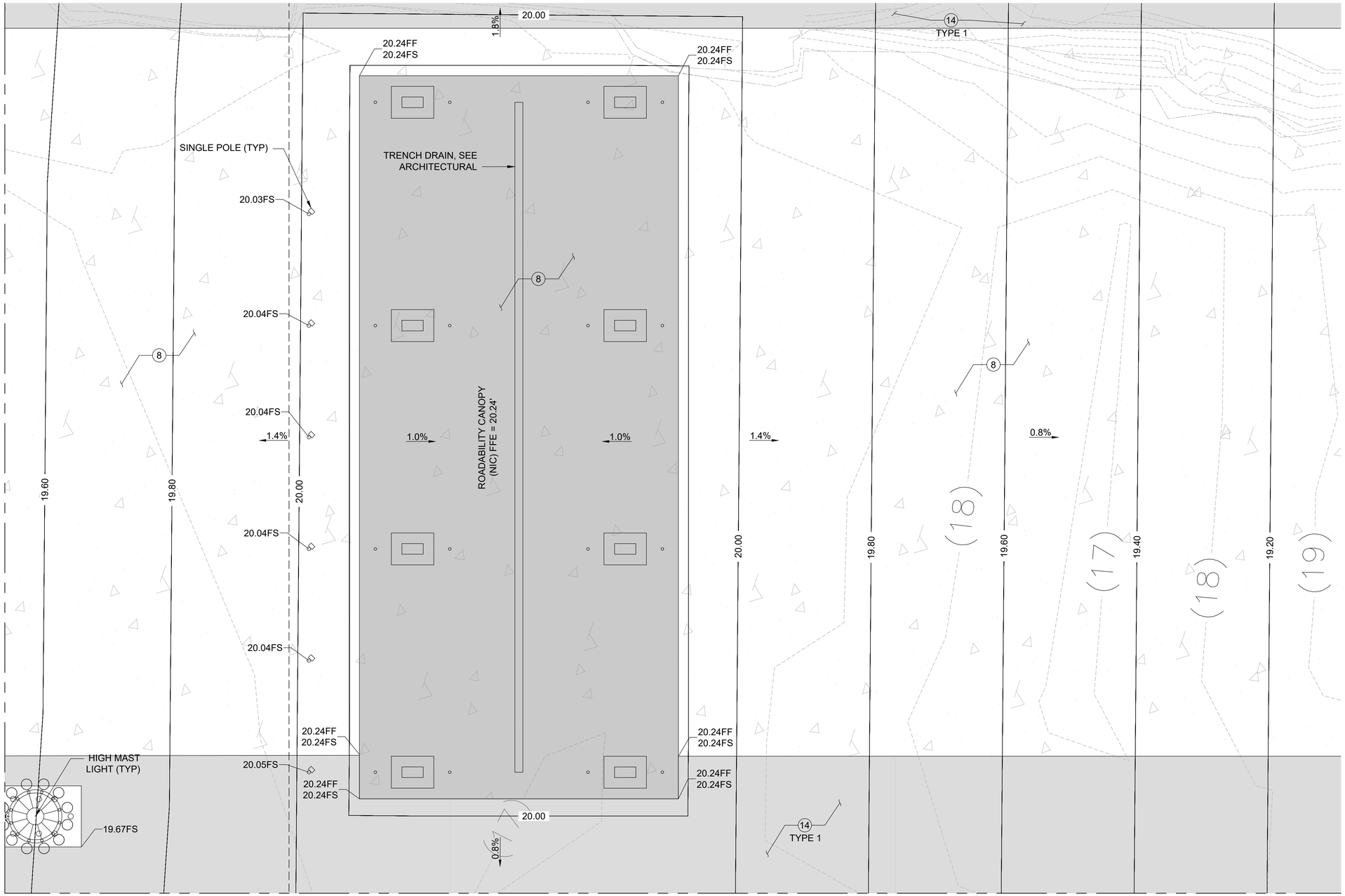

1GP-14 / GP-03 GRADING & PAVING ENLARGED PLAN

SCALE: 1" = 10'

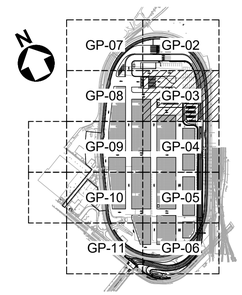

KEY MAP

10' 0' 10' 20'

SCALE: 1" = 10'

NO.	DATE	DRAWN	REVISIONS -	CHK'D	APP'D
D	9/19/25	-	80% DESIGN		

NOT FOR CONSTRUCTION

NO.	DATE	DRAWN	REVISIONS -	CHK'D	APP'D
			80% DESIGN REVIEW SEP 19 , 2025		

Jacobs
2600 MICHELSON DRIVE, SUITE 500
IRVINE, CA 92612
T: (949) 224-7500
F: (949) 224-7501

REGISTERED PROFESSIONAL ENGINEER
MICHAEL S. MCAMIS
No. 60573
CIVIL
STATE OF CALIFORNIA

SCALE:	1"-10'
DRAWN:	A. TRUJILLO
CHECKED:	G. NGUYEN
DESIGNED:	S. MCAMIS
	ENGINEER / ARCHITECT

TERMINAL ISLAND MARITIME SUPPORT FACILITY

GRADING & PAVING ENLARGED PLAN

THE PORT OF LOS ANGELES
ENGINEERING DIVISION
425 S. PALOS VERDES STREET SAN PEDRO CA 90731-3309

DRAWING NUMBER	SHEET NUMBER
1-3513	GP-14

POLAPRO1_040223_BWD

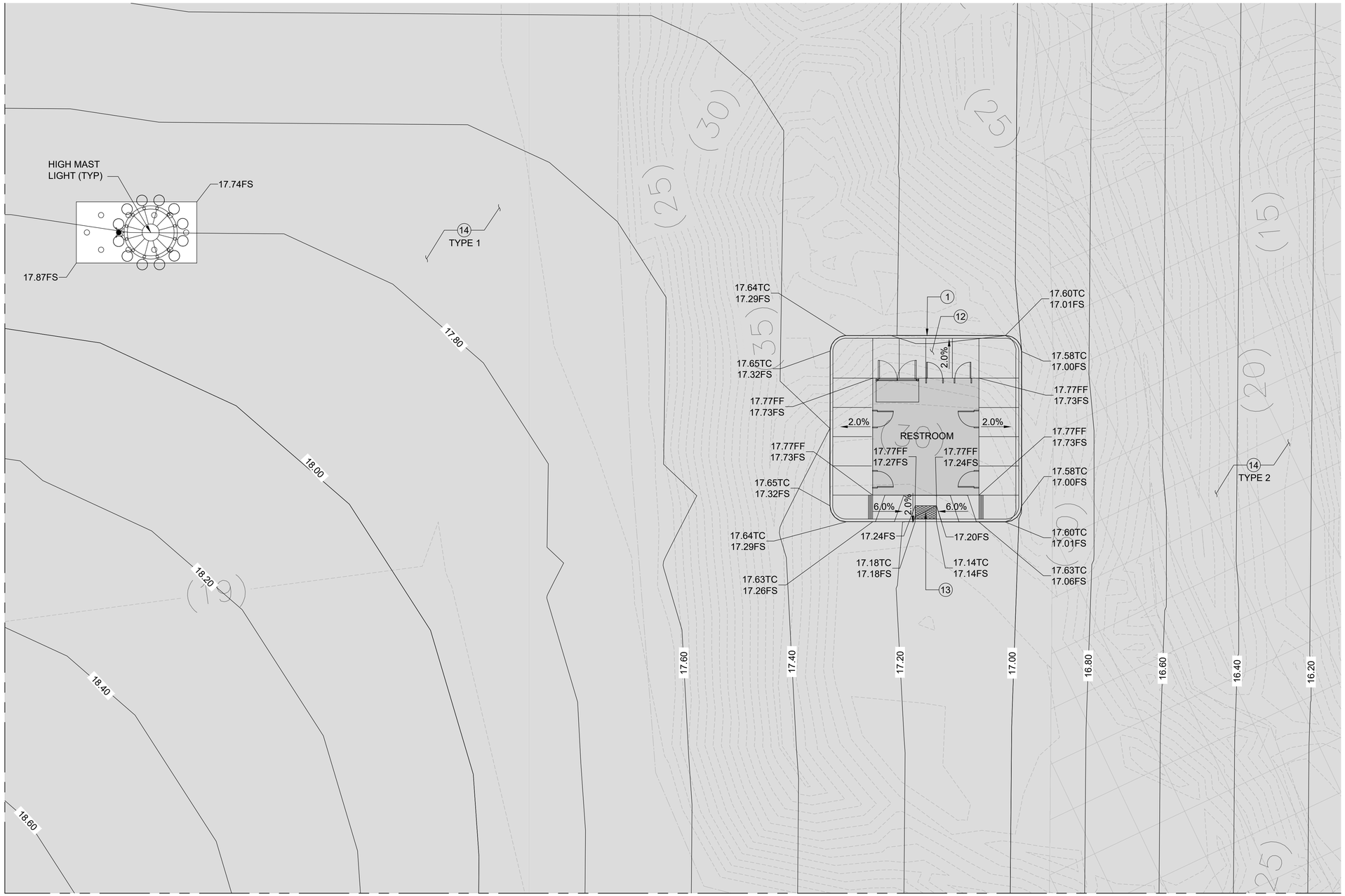

GRADING & PAVING CONSTRUCTION NOTES:

LEGEND OF CONSTRUCTION NOTES		
EXISTING/PROTECT		CONSTRUCT
No.	CONSTRUCTION ITEM	REFERENCE DWG
1	CONCRETE CURB	CITY OF LA STD S-410-2
8	CONCRETE PAVEMENT	2GP-20
12	CONCRETE WALK	5GP-20
13	CURB RAMP	CITY OF LA STD S-442-6
14	ASPHALT CONCRETE PAVEMENT	1GP-20
16	CRUSHED MISC BASE (CMB)	4GP-20
251	DETECTABLE WARNING SURFACE, PER STD. PLAN S-442-6	

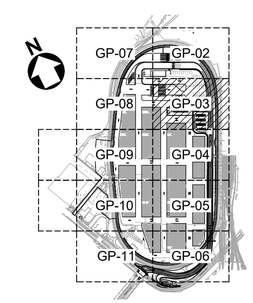

KEY MAP

1GP-15 / GP-03 GRADING & PAVING ENLARGED PLAN
SCALE: 1" = 10'

10' 0' 10' 20'
SCALE: 1" = 10'

NO.	DATE	DRAWN	REVISIONS -	CHK'D	APP'D
D	9/19/25	-	80% DESIGN		

NOT FOR CONSTRUCTION

NO.	DATE	DRAWN	REVISIONS -	CHK'D	APP'D
			80% DESIGN REVIEW SEP 19 , 2025		

Jacobs
2600 MICHELSON DRIVE, SUITE 500
IRVINE, CA 92612
T: (949) 224-7500
F: (949) 224-7501

REGISTERED PROFESSIONAL ENGINEER
MICHAEL S. McAMIS
No. 60573
CIVIL
STATE OF CALIFORNIA

SCALE: 1"=10'
DRAWN: A. TRUJILLO
CHECKED: G. NGUYEN
DESIGNED: S. MCAMIS
ENGINEER / ARCHITECT

TERMINAL ISLAND MARITIME SUPPORT FACILITY

GRADING & PAVING ENLARGED PLAN

THE PORT OF LOS ANGELES
ENGINEERING DIVISION
425 S. PALOS VERDES STREET SAN PEDRO CA 90731-3309

DRAWING NUMBER 1-3513
SHEET NUMBER GP-15

POLAPRO1_04/2023_BWD

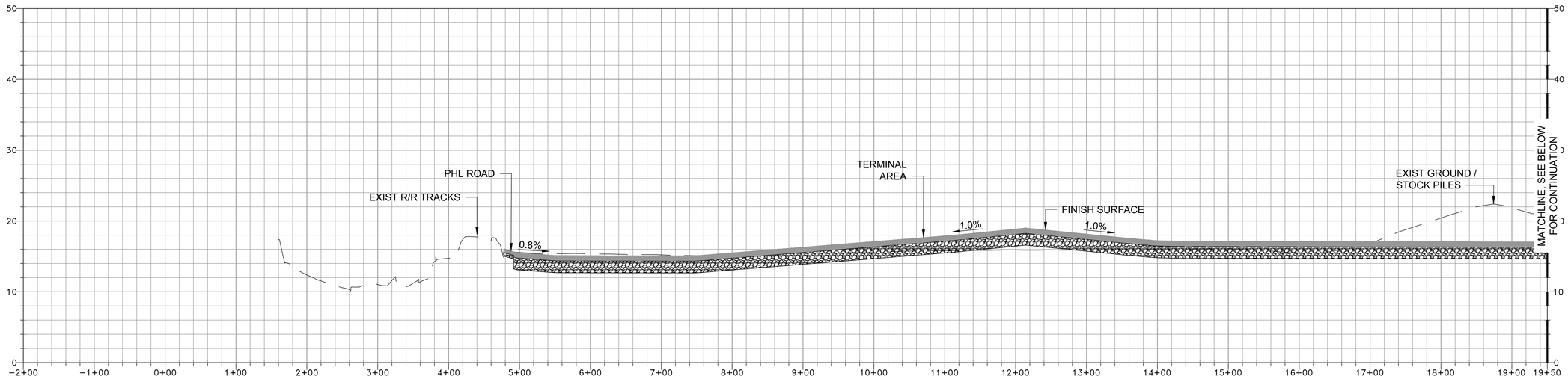

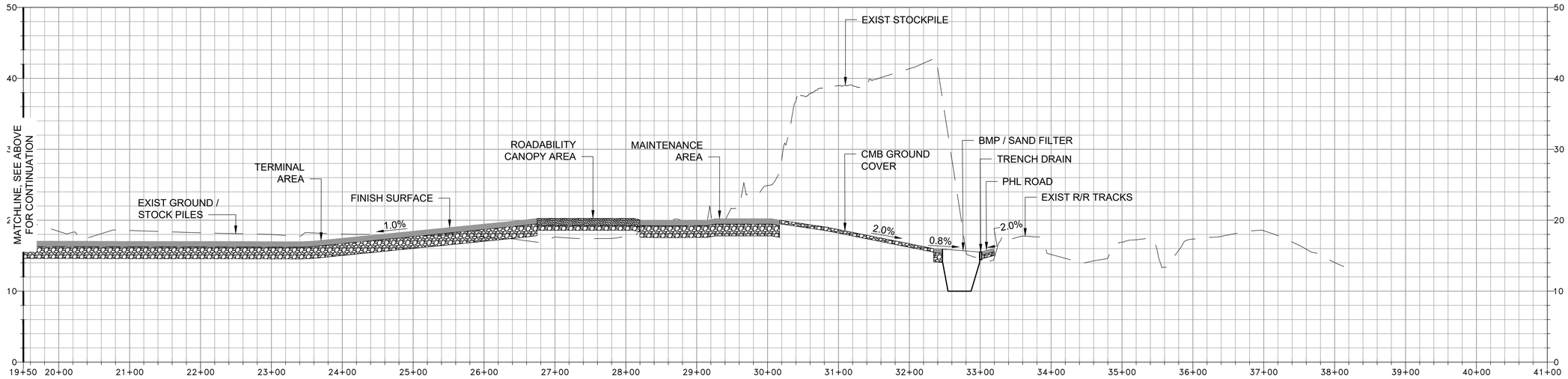

1GP-16 / GP-16 TYPICAL GRADING CROSS-SECTION A

SCALE: AS SHOWN

HOR 80' 0'-0" 80' 160'
SCALE: 1" = 80'

VER 8' 0'-0" 8 16'
SCALE: 1" = 8'

NO.	DATE	DRAWN	REVISIONS -	CHK'D	APP'D
C	7/18/25	-	40% DESIGN		
D	9/19/25	-	80% DESIGN		

NOT FOR CONSTRUCTION

NO.	DATE	DRAWN	REVISIONS -	CHK'D	APP'D
			80% DESIGN REVIEW SEP 19 , 2025		

Jacobs
2600 MICHELSON DRIVE, SUITE 500
IRVINE, CA 92612
T: (949) 224-7500
F: (949) 224-7501

REGISTERED PROFESSIONAL ENGINEER — MICHAEL S. McANIS — No. 60573 — CIVIL — STATE OF CALIFORNIA

SCALE:	AS SHOWN
DRAWN:	E. FLORES
CHECKED:	G. NGUYEN
DESIGNED:	S. MCAMIS
	ENGINEER / ARCHITECT

TERMINAL ISLAND MARITIME SUPPORT FACILITY

TYPICAL GRADING CROSS-SECTIONS

THE PORT OF LOS ANGELES
ENGINEERING DIVISION
425 S. PALOS VERDES STREET SAN PEDRO CA 90731-3309

DRAWING NUMBER 1-3513

SHEET NUMBER GP-16

POLAPRDY_040520_BWD

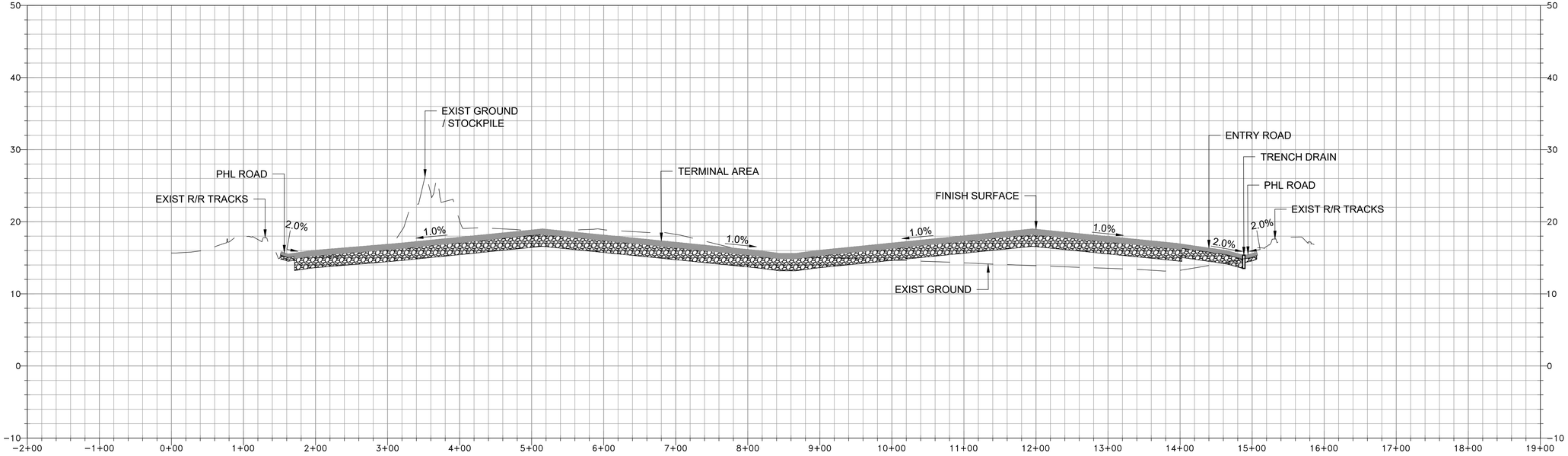

1GP-17
GP-17

TYPICAL GRADING CROSS-SECTION B

SCALE: AS SHOWN

HOR 80' 0'-0" 80' 160'
SCALE: 1" = 80'

VER 8' 0'-0" 8' 16'
SCALE: 1" = 8'

NO.	DATE	DRAWN	REVISIONS -	CHK'D	APP'D
C	7/18/25	-	40% DESIGN		
D	9/19/25	-	80% DESIGN		

NOT FOR CONSTRUCTION

NO.	DATE	DRAWN	REVISIONS -	CHK'D	APP'D
			80% DESIGN REVIEW SEP 19 , 2025		

Jacobs
2920 MICHELSON DRIVE, SUITE 600
IRVINE, CA 92612
T: (949) 224-7500
F: (949) 224-7501

REGISTERED PROFESSIONAL ENGINEER
MICHAEL S. MCAMIS
No. 60573
CIVIL
STATE OF CALIFORNIA

SCALE: AS SHOWN
DRAWN: E. FLORES
CHECKED: G. NGUYEN
DESIGNED: S. MCAMIS
ENGINEER / ARCHITECT

TERMINAL ISLAND MARITIME SUPPORT FACILITY

TYPICAL GRADING CROSS-SECTIONS

THE PORT OF LOS ANGELES
ENGINEERING DIVISION
425 S. PALOS VERDES STREET SAN PEDRO CA 90731-3309

DRAWING NUMBER 1-3513
SHEET NUMBER GP-17

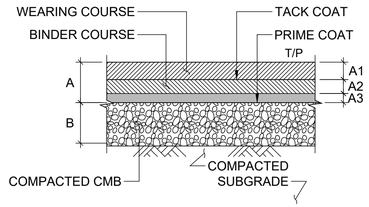

LOCATION	UNITS	MAIN YARD AREAS	MAIN ACCESS ROADS	PARKING AREAS / PHL ROAD
		PAVEMENT TYPE 1	PAVEMENT TYPE 2	PAVEMENT TYPE 3
TOTAL ASPHALT THICKNESS (A)	INCH	9	7	6
CMB THICKNESS (B)	INCH	20	12	6
ASPHALT WEARING COURSE (A1)	INCH	3" / CY-PG 76-10	3" / CY-PG 76-10	3" / CY-PG 64-10
ASPHALT BASE COURSE (A2)	INCH	4" / CW-PG 76-10	4" / CW-PG 64-10	3" / CY-PG 64-10
LOW MODULUS ASPHALT LAYER (A3)	INCH	2" / C1-PG 64-10	-	-

1GP-20 / GP-02 - GP-11 **FULL DEPTH ASPHALT PAVEMENT**
SCALE: NTS

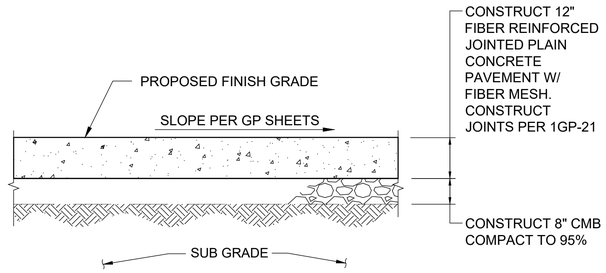

2GP-20 / GP-02 - GP-11 **CONCRETE PAVEMENT TYPE 4**
SCALE: NTS

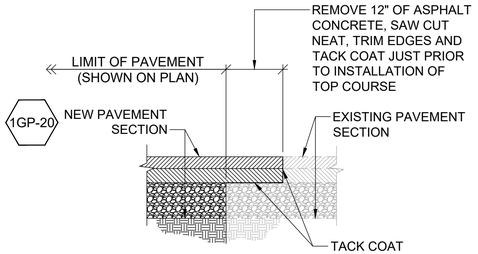

3GP-20 / GP-02 - GP-11 **FULL DEPTH ASPHALT JOIN**
SCALE: NTS

CONCRETE PAVEMENT:

1. JOINTS SHALL BE LAID OUT TO FORM APPROXIMATELY SQUARE PANELS. RECTANGULAR PANELS, WITH THE LONG DIMENSION NOT MORE THAN 1.5 TIMES THE SHORT DIMENSION MAY BE USED WHEN SQUARE PANELS ARE NOT FEASIBLE. MAXIMUM JOINT SPACING SHALL NOT EXCEED 20'.
2. CONTRACTOR SHALL PROVIDE, FOR THE ENGINEERS APPROVAL, A JOINT LAYOUT PLAN BASED ON EQUIPMENT AND PROCEDURES TO BE USED. CONTRACTOR SHALL SUBMIT PLAN A MINIMUM OF ONE WEEK PRIOR TO START OF PAVEMENT CONSTRUCTION. EXPANSION JOINTS SHALL BE USED WHERE NEW PAVEMENT ABUTS EXISTING CONCRETE PAVEMENT, FOUNDATIONS, OR PAVEMENT STRUCTURES.
3. TRANSVERSE CONSTRUCTION JOINTS SHALL BE USED AT THE END OF A DAYS WORK OR WHERE CONCRETE PLACEMENT HAS BEEN DELAYED FOR SOME TIME. TRANSVERSE CONSTRUCTION JOINTS SHALL BE LOCATED TO COINCIDE WITH A NORMAL TRANSVERSE CONTRACTION JOINT WHEN AT ALL POSSIBLE.
4. THICKENED EDGES SHALL BE USED WHERE NEW CONCRETE PAVEMENT ABUTS EXISTING AND NEW FLEXIBLE PAVEMENT.
5. DEPTH OF INITIAL CUT CAN BE REDUCED IF CONTRACTOR ELECTS TO USE SOFF-CUT INTERNATIONAL JOINT CUTTING METHOD. DEPTH OF CUT WILL BE IN ACCORDANCE WITH MANUFACTURER'S RECOMMENDATIONS.

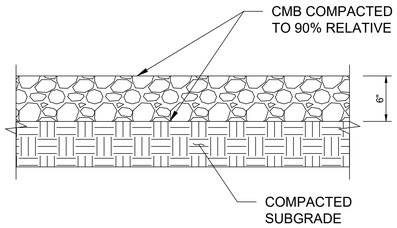

4GP-20 / GP-02 - GP-11 **UNPAVED / CMB GROUND COVER DETAIL**
SCALE: NTS

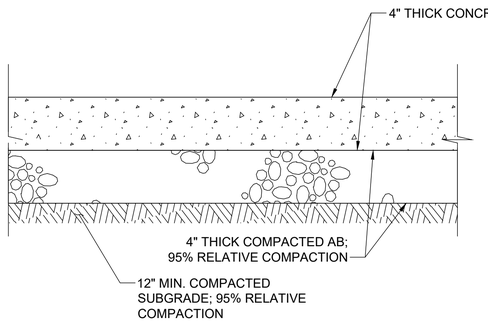

NOTES:

1. CONCRETE SHALL BE CLASS 520-C-2500 MIN. PER S.S.P.W.C.
2. EXPANSION JOINT SHALL BE CONSTRUCTED EVERY 20' O.C. MAXIMUM AND AT EVERY ECR AND EVERY BCR PER DETAIL E7/CP501.
3. WEAKENED PLANE JOINTS SHALL BE CONSTRUCTED EVERY 10'O.C. MAXIMUM PER DETAIL E11/CP501.

5GP-20 / GP-02, GP-03 **4" THICK CONCRETE WALK DETAIL**
SCALE: NTS

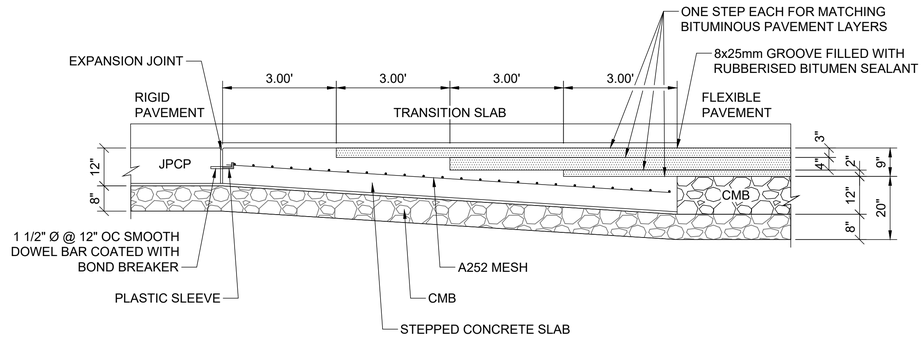

6GP-20 / 1GP-21 **TYPICAL DETAILS OF TRANSITION SLAB BETWEEN RIGID AND FLEXIBLE PAVEMENT - TYPE 1 (TRANSVERSE JOINT)**
SCALE: NTS

NO.	DATE	DRAWN	REVISIONS -	CHK'D	APP'D
C	7/18/25	-	40% DESIGN		
D	9/19/25	-	80% DESIGN		

NOT FOR CONSTRUCTION

NO.	DATE	DRAWN	REVISIONS -	CHK'D	APP'D
			80% DESIGN REVIEW SEP 19 , 2025		

Jacobs
3600 MICHELSON DRIVE, SUITE 600
IRVINE, CA 92612
T: (949) 224-7500
F: (949) 224-7501

REGISTERED PROFESSIONAL ENGINEER
MICHAEL S. McAMIS
No. 60573
CIVIL
STATE OF CALIFORNIA

SCALE:	AS SHOWN
DRAWN:	E. FLORES
CHECKED:	G. NGUYEN
DESIGNED:	S. MCAMIS
	ENGINEER / ARCHITECT

TERMINAL ISLAND MARITIME SUPPORT FACILITY

GRADING & PAVING DETAILS

THE PORT OF LOS ANGELES
ENGINEERING DIVISION
425 S. PALOS VERDES STREET SAN PEDRO CA 90731-3309

DRAWING NUMBER	SHEET NUMBER
1-3513	GP-20

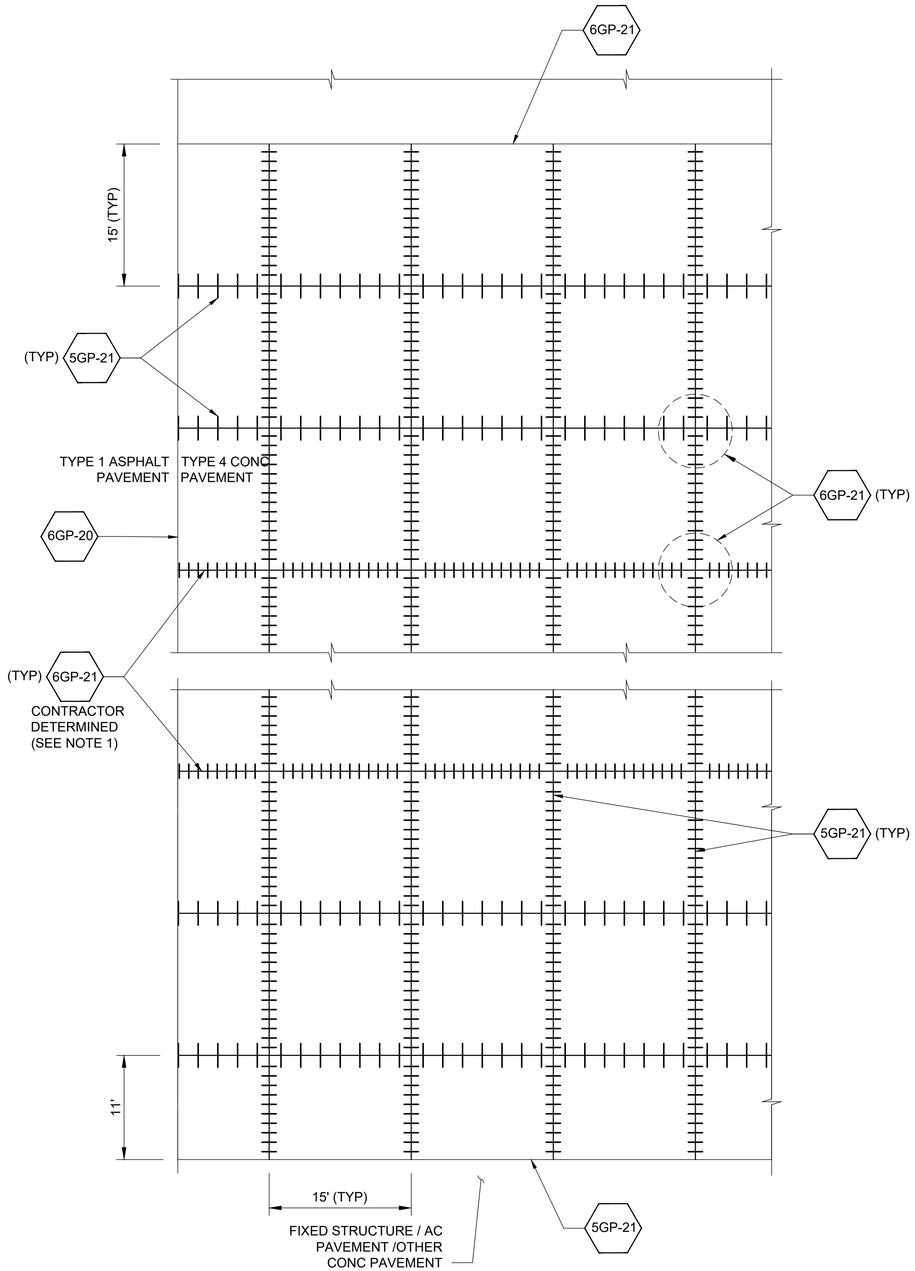

1GP-21 CONCRETE PAVEMENT JOINT SPACING
SCALE: NTS

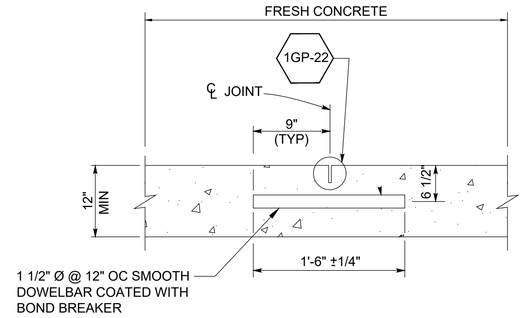

2GP-21 TRANSVERSE CONTRACTION JOINT W/DOWEL BARS
SCALE: NTS

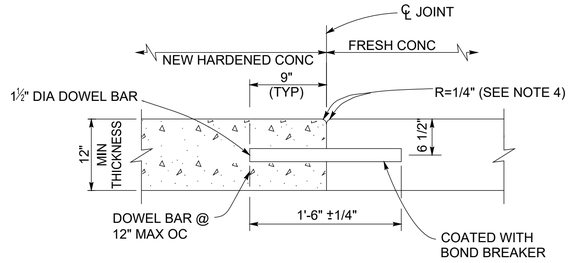

4GP-21 CONSTRUCTION JOINT W/DOWEL BARS
SCALE: NTS

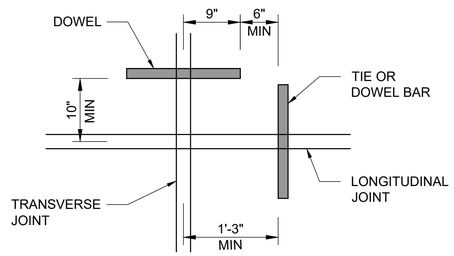

6GP-21 JOINT INTERSECTION DETAIL
SCALE: 1"=1,-0"

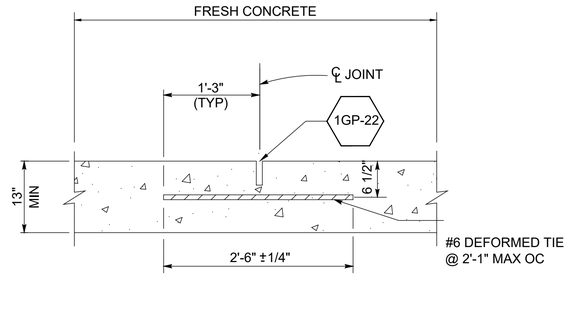

3GP-21 LONGITUDINAL CONTRACTION JOINT W/DOWEL BARS
SCALE: NTS

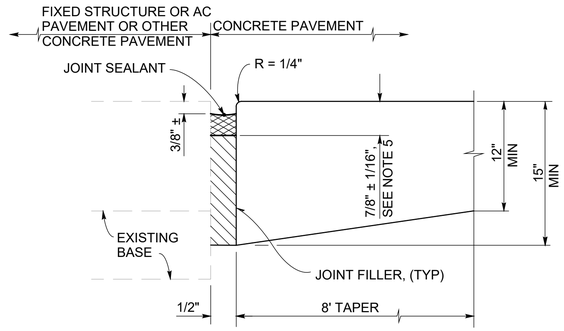

5GP-21 ISOLATION JOINT AT FIXED STRUCTURE, AC PAVEMENT OR OTHER CONC PAVEMENT
SCALE: NTS

NOTES:

1. CONTRACTOR TO DETERMINE LOCATION OF PLAN CONSTRUCTION JOINT (LONGITUDINAL) BASED ON MEANS AND METHOD OF CONSTRUCTION. TO BE SUBMITTED TO THE ENGINEER FOR REVIEW AND APPROVAL PRIOR TO CONSTRUCTION OF CONCRETE PAVEMENT.
2. LONGITUDINAL JOINTS TO BE CONSTRUCTED IN THE EAST-WEST DIRECTION AND PARALLEL TO THE DIRECTION OF TRAVEL FOR THE ENTIRE PROJECT.
3. DETAIL 4GP-04 CONSTRUCTION JOINT SHALL BE PLACED WHERE A CONSTRUCTION JOINT OCCURS IN BETWEEN CONTRACTION JOINTS.
4. IF FRESH CONCRETE PAVEMENT IS PLACED ADJACENT TO EXISTING CONCRETE PAVEMENT, THE TOP CORNER OF THE EXISTING CONCRETE PAVEMENT DOES NOT NEED TO BE ROUNDED TO THE 1/4" RADIUS, AS SHOWN.
5. USE 7/8"± 1/16" DIMENSION FOR SILICONE SEALANT.
6. ISOLATION JOINTS TO BE PLACED WHERE CONCRETE PAVEMENT ABUTS PROPOSED CURBS, DRAINAGE STRUCTURE, UTILITY VAULTS/MANHOLES, AND LIGHT POLE FOUNDATIONS OR OTHER CONCRETE OR ASPHALT PAVEMENT.

NO.	DATE	DRAWN	REVISIONS -	CHK'D	APP'D
C	7/18/25	-	40% DESIGN		
D	9/19/25	-	80% DESIGN		

NOT FOR CONSTRUCTION

NO.	DATE	DRAWN	REVISIONS -	CHK'D	APP'D

80% DESIGN REVIEW SEP 19 , 2025

Jacobs
3900 KILROSS DRIVE, SUITE 600
CHINO, CA 91710
T: (949) 224-7502
F: (949) 224-7501

REGISTERED PROFESSIONAL ENGINEER MICHAEL S. McANIS No. 60573 CIVIL STATE OF CALIFORNIA

SCALE:	AS SHOWN
DRAWN:	E. FLORES
CHECKED:	G. NGUYEN
DESIGNED:	S. MCAMIS
	ENGINEER / ARCHITECT

TERMINAL ISLAND MARITIME SUPPORT FACILITY

GRADING & PAVING DETAILS

THE PORT OF LOS ANGELES
ENGINEERING DIVISION
425 S. PALOS VERDES STREET SAN PEDRO CA 90731-3309

DRAWING NUMBER: 1-3513

SHEET NUMBER: GP-21

POLAPRD1_04/2023_BWD

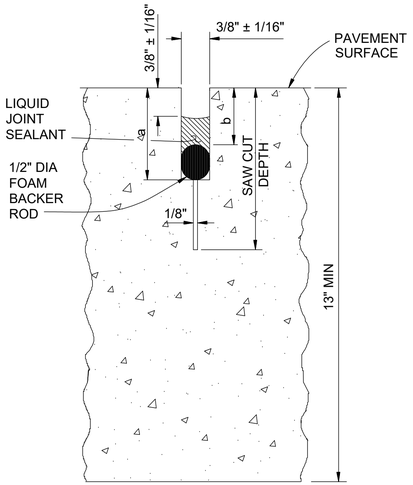

1GP-22 **LIQUID JOINT SEALANT**
SCALE: NTS

LIQUID SEALANT RESERVOIR DEPTH

LIQUID SEALANT MATERIAL	3/8" JOINT WIDTH	
	DIMENSION	
	a	b
SILICONE	1" ± 1/16"	5/8" ± 1/16"
ASPHALT RUBBER	1 3/16" ± 1/16"	3/4" ± 1/16"

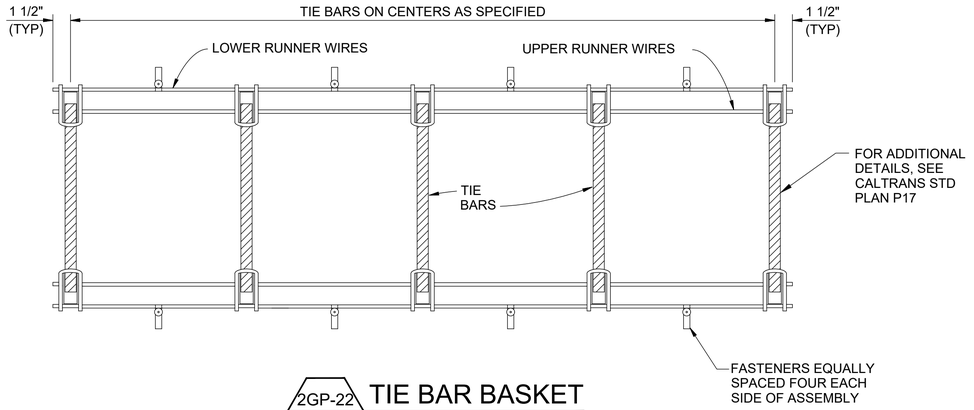

2GP-22 **TIE BAR BASKET**
SCALE: NTS

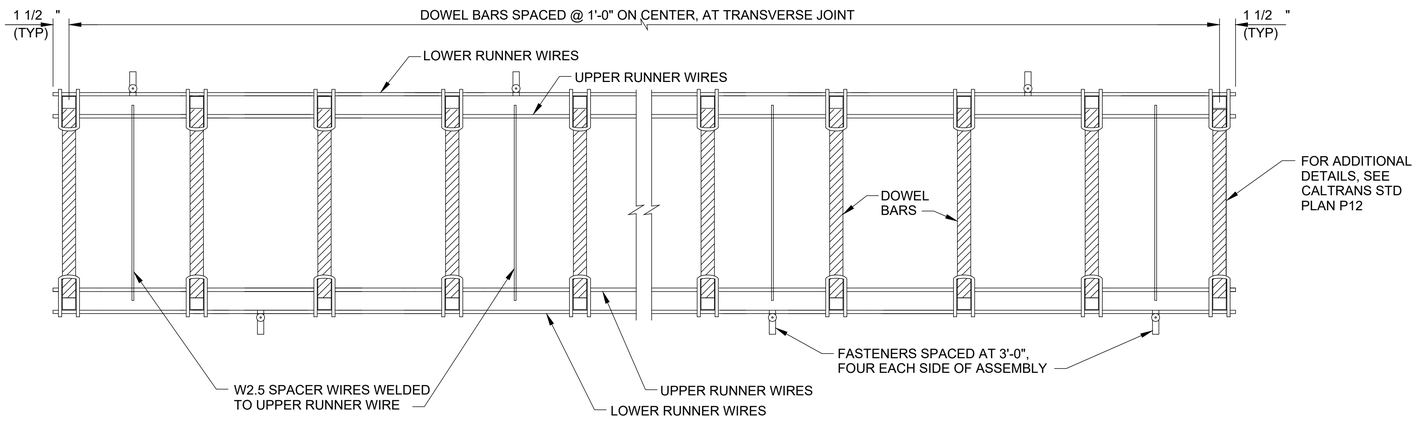

3GP-22 **DOWEL BAR BASKET**
SCALE: NTS

NOTES:

1. DEPTH OF INITIAL SAW CUT CAN BE REDUCED IF CONTRACTOR ELECTS TO USE SOFF-CUT INTERNATIONAL JOINT CUTTING METHOD. DEPTH OF CUT WILL BE IN ACCORDANCE WITH MANUFACTURERS RECOMMENDATIONS.
2. ASPHALT /RUBBER JOINT SEALANT : ASPHALT RUBBER SEALANT MUST BE PAVING ASPHALT MIXED WITH GROUND RUBBER CONTAINING NOT LESS THAN 22 PERCENT GROUND RUBBER BY WEIGHT. ONE HUNDRED PERCENT OF GROUND RUBBER MUST PASS A NO. 8 SIEVE. GROUND RUBBER MUST BE VULCANIZED OR A COMBINATION OR VULCANIZED AND DEVULCANIZED MATERIAL. ASPHALT RUBBER SEALANT MUST COMPLY WITH ASTM D 6690. TYPE II. DO NOT APPLY ASPHALT RUBBER SEALANT WHEN THE CONCRETE PAVEMENT SURFACE TEMPERATURE IS BELOW 50 DEGREES FAHRENHEIT.
3. SILICONE JOINT SEALANT: SILICONE JOINT SEALANT SHALL COMPLY WITH CALTRANS STANDARD SPECIFICATION 40-1.02 (2).
4. BACKER ROD CONTRACTION JOINT FILLER: ASTM 5349, TYPE 1.

NO.	DATE	DRAWN	REVISIONS -	CHK'D	APP'D
C	7/18/25	-	40% DESIGN		
D	9/19/25	-	80% DESIGN		

NOT FOR CONSTRUCTION

NO.	DATE	DRAWN	REVISIONS -	CHK'D	APP'D
			80% DESIGN REVIEW SEP 19 , 2025		

Jacobs
2600 MICHELSON DRIVE, SUITE 500
IRVINE, CA 92612
T: (949) 224-7500
F: (949) 224-7501

REGISTERED PROFESSIONAL ENGINEER
MICHAEL S. McAMIS
No. 60573
CIVIL
STATE OF CALIFORNIA

SCALE: AS SHOWN
DRAWN: E. FLORES
CHECKED: G. NGUYEN
DESIGNED: S. MCAMIS
ENGINEER / ARCHITECT

TERMINAL ISLAND MARITIME SUPPORT FACILITY

GRADING & PAVING DETAILS

THE PORT OF LOS ANGELES
ENGINEERING DIVISION
425 S. PALOS VERDES STREET SAN PEDRO CA 90731-3309

DRAWING NUMBER: 1-3513
SHEET NUMBER: GP-22

POLAPRD1_04/2023_BWD

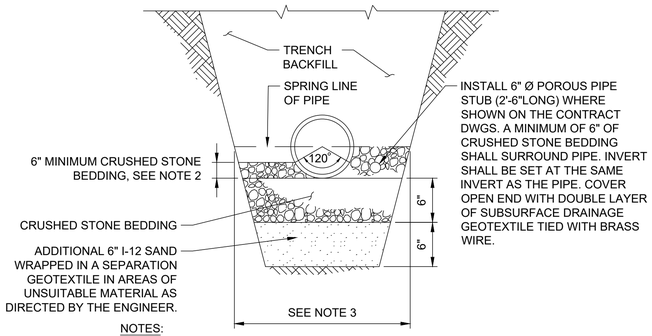

NOTES:

1. TRENCH SHALL BE BACKFILLED TO THE SURROUNDING EXISTING GROUND ELEVATION OR PAVEMENT SUBGRADE, WHICHEVER IS LOWER.

2. FOR FLEXIBLE PIPE BRING CRUSHED STONE TO SPRING LINE OF PIPE.

3. PIPE OUTSIDE DIAMETER + 2'-0" FOR PIPES UP TO AND INCLUDING 18" INSIDE DIAMETER, PIPE OUTSIDE DIAMETER + 3'-0" FOR PIPES OVER 18" INSIDE DIAMETER AND STRUCTURES.

4. GEOTEXTILE SHALL HAVE AN AVERAGE OPENING SIZE OF LESS THAN 0.6MM AND PERMEABILITY GREATER THAN 10^{-3} CM/SEC.

1GP-23 TYPICAL PIPE TRENCH

SCALE: NTS

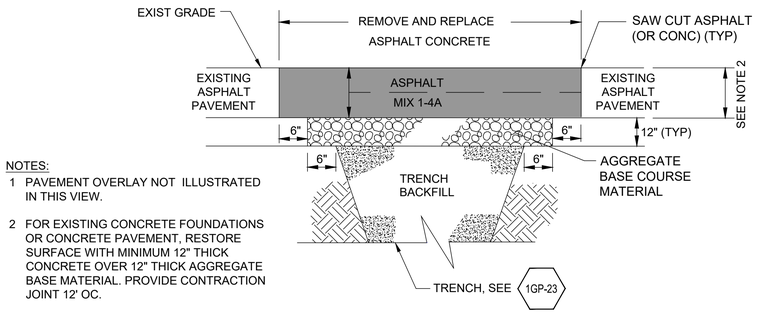

NOTES:

1 PAVEMENT OVERLAY NOT ILLUSTRATED IN THIS VIEW.

2 FOR EXISTING CONCRETE FOUNDATIONS OR CONCRETE PAVEMENT, RESTORE SURFACE WITH MINIMUM 12" THICK CONCRETE OVER 12" THICK AGGREGATE BASE MATERIAL. PROVIDE CONTRACTION JOINT 12' OC.

2GP-23 - TRENCH RESTORATION - ASPHALT PAVEMENT

SCALE: NTS

NO.	DATE	DRAWN	REVISIONS -	CHK'D	APP'D
C	7/18/25	-	40% DESIGN		
D	9/19/25	-	80% DESIGN		

NOT FOR CONSTRUCTION

NO.	DATE	DRAWN	REVISIONS -	CHK'D	APP'D
			80% DESIGN REVIEW SEP 19 , 2025		

Jacobs
300 E. ESPLANADE DRIVE, SUITE 500
OXNARD, CA 93036
T: (949) 224-7500
F: (949) 224-7501

REGISTERED PROFESSIONAL ENGINEER MICHAEL S. MCAMIS No. 60573 CIVIL STATE OF CALIFORNIA

SCALE: AS SHOWN
DRAWN: E. FLORES
CHECKED: G. NGUYEN
DESIGNED: S. MCAMIS
ENGINEER / ARCHITECT

TERMINAL ISLAND MARITIME SUPPORT FACILITY

GRADING & PAVING DETAILS

THE PORT OF LOS ANGELES
ENGINEERING DIVISION
425 S. PALOS VERDES STREET SAN PEDRO CA 90731-3309

DRAWING NUMBER 1-3513

SHEET NUMBER GP-23

POLAPRD1_04/2023_BWD

POINT TABLE		
POINT	NORTHING	EASTING
1	XXXXXXX.XX	XXXXXXX.XX
2	XXXXXXX.XX	XXXXXXX.XX
3	XXXXXXX.XX	XXXXXXX.XX

NO.	DATE	DRAWN	REVISIONS -	CHK'D	APP'D
D	9/19/25	-	80% DESIGN		

NOT FOR CONSTRUCTION

NO.	DATE	DRAWN	REVISIONS -	CHK'D	APP'D

80% DESIGN REVIEW
SEP 19 , 2025

Jacobs
2600 MICHELSON DRIVE, SUITE 500
IRVINE, CA 92612
T: (949) 224-7500
F: (949) 224-7501

REGISTERED PROFESSIONAL ENGINEER
MICHAEL S. MCAMIS
No. 60573
CIVIL
STATE OF CALIFORNIA

SCALE: AS SHOWN
DRAWN: A. TRUJILLO
CHECKED: G. NGUYEN
DESIGNED: S. MCAMIS
ENGINEER / ARCHITECT

TERMINAL ISLAND MARITIME SUPPORT FACILITY

GRADING & PAVING COORDINATE POINT TABLE

THE PORT OF LOS ANGELES
ENGINEERING DIVISION
425 S. PALOS VERDES STREET SAN PEDRO CA 90731-3309

DRAWING NUMBER 1-3513
SHEET NUMBER GP-24

POLAPRO1_04/2023_BWD

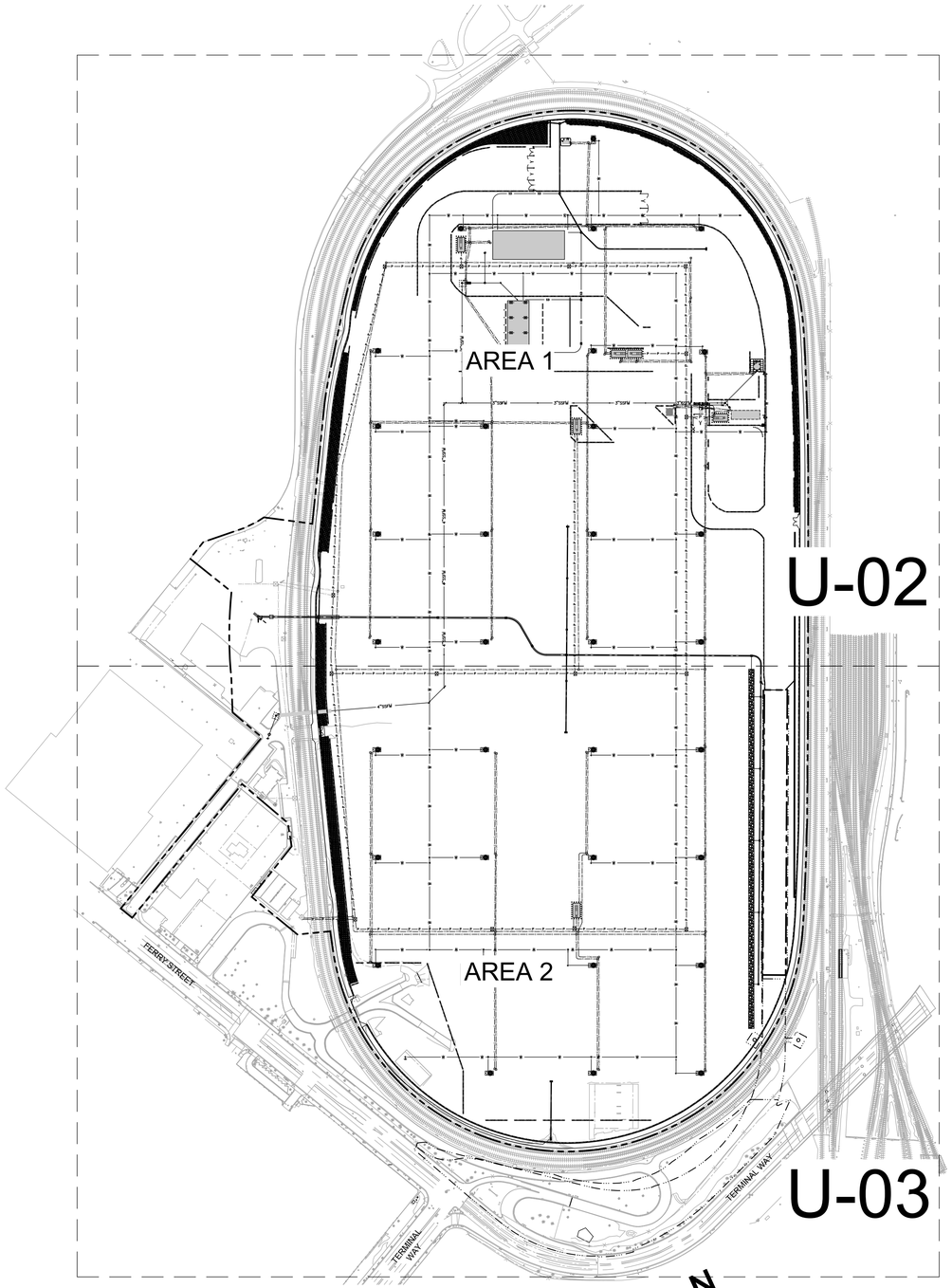

1U-01 / U-01 COMPOSITE UTILITY KEY PLAN
SCALE: 1" = 200'

GENERAL EXISTING UTILITY NOTES:

1. THE EXISTING UTILITIES AND SUBSTRUCTURES SHOWN ARE APPROXIMATE. THE PRESENCE, LOCATION, SIZE, AND DEPTH OF THE EXISTING UNDERGROUND UTILITIES AS SHOWN ON DRAWINGS WERE OBTAINED FROM RECORD DRAWINGS AND A GROUND PENETRATING RADAR (GPR) SURVEY. NO REPRESENTATION IS MADE AS TO THE ACCURACY OR COMPLETENESS OF SAID UTILITY INFORMATION. POTHOLE REPORT CAN BE FOUND IN BID PACKAGE.
2. IN CONFORMANCE WITH CITY OF LOS ANGELES ORDINANCE NO. 150,478, POTHOLE EXISTING SUBSURFACE INSTALLATIONS CARRYING UNSTABLE SUBSTANCES TO DETERMINE THEIR LOCATIONS AND ELEVATIONS PRIOR TO EXCAVATION.
3. SCHEDULE AND COORDINATE CONSTRUCTION ACTIVITIES WITH ENGINEER, INCLUDING VARIOUS COMPANIES, AGENCIES, AND OTHER CONTRACTORS WHO MAY BE AFFECTED BY THIS WORK.
4. CALL UNDERGROUND SERVICE ALERT (USA) (1-800-422-4133) TWO WORKING DAYS PRIOR TO CONSTRUCTION TO OBTAIN A DIG ALERT ID NUMBER.\PROVIDE THE REFERENCE NUMBER OF THE DIG ALERT CONTACT AND THE ACTION BY DIG ALERT TO ENGINEER.
5. FIELD VERIFY DIMENSIONS FOR CONFLICTS WITH EXISTING UTILITY, SIGNAL CABLES/EQUIPMENT, AND OTHER ITEMS THAT MIGHT IMPAIR CONSTRUCTION ACTIVITIES. NOTIFY ENGINEER IMMEDIATELY WHEREVER UTILITIES ARE ENCOUNTERED THAT ARE NOT SHOWN ON DRAWINGS.
6. ANY ACTIVE EXISTING UTILITIES DESIGNATED AS "PROTECT-IN-PLACE" THAT ARE DAMAGED DURING CONSTRUCTION SHALL BE REPAIRED OR REPLACED AND RECONNECTED AS REQUIRED FOR A COMPLETE OPERATING SYSTEM AT NO ADDITIONAL COST TO DEPARTMENT.
7. PRIOR TO COMMENCING WORK, FIELD VERIFY EXISTING SITE CONDITIONSWITH ENGINEER TO ASCERTAIN THE LIMIT OF WORK ACTIVITIES.
8. UTILITY CALLOUTS SHOW POLA REFERENCE DRAWINGS IN PARENTHESIS. REFER TO T-SHEETS FOR LISTING OF REFERENCE DRAWINGS.
9. PROTECT EQUIPMENT, UTILITY LINES, AND MATERIALS WHEN WORKING ON FINISHED SURFACES. LIMIT DAMAGE TO THE CONFINED SPACE AND RESTORE TO THE ORIGINAL CONDITIONS SURFACES WHICH ARE DAMAGED BECAUSE OF THE INSTALLATION OF THIS CONTRACT WORK.
10. SHOULD CONFLICTING INFORMATION BE FOUND ON DRAWINGS, NOTIFY ENGINEER BEFORE PROCEEDING WITH WORK IN QUESTION.
11. CONTACT UTILITY OWNERS TO VERIFY LOCATIONS OF SUBSTRUCTURES PRIOR TO EXCAVATION.
12. WHERE CROSSING ANY EXISTING SUBSTRUCTURES WITH NEW SUBSURFACE IMPROVEMENTS, TRENCH CAREFULLY TO LOCATE ACTIVE AND IDLE SUBSTRUCTURES AT THESE CROSSINGS.
13. WHEN TRENCHING, PLACE DETECTION TAPE OVER ENCOUNTERED EXISTING UTILITY LINES PER SPECIFICATIONS.
14. REFER TO POTHOLE REPORT FOR ADDITIONAL INFORMATION.

200' 0' 200' 400'
SCALE: 1" = 200'

NO.	DATE	DRAWN	REVISIONS -	CHK'D	APP'D
A	3/20/25	-	30% CONCEPTUAL DESIGN		
B	4/25/25	-	FINAL CONCEPTUAL DESIGN		
C	7/18/25	-	40% DESIGN		
D	9/19/25	-	80% DESIGN		

NOT FOR CONSTRUCTION

NO.	DATE	DRAWN	REVISIONS -	CHK'D	APP'D

80% DESIGN REVIEW
SEP 19 , 2025

Jacobs
2600 MICHELSON DRIVE, SUITE 500
IRVINE, CA 92612
T: (949) 224-7500
F: (949) 224-7501

REGISTERED PROFESSIONAL ENGINEER
MICHAEL S. McAMIS
No. 60573
CIVIL
STATE OF CALIFORNIA

SCALE:	1"=200'
DRAWN:	E. FLORES
CHECKED:	G. NGUYEN
DESIGNED:	S. MCAMIS
	ENGINEER / ARCHITECT

TERMINAL ISLAND MARITIME SUPPORT FACILITY

COMPOSITE UTILITY KEY PLAN AND NOTES

THE PORT OF LOS ANGELES
ENGINEERING DIVISION
425 S. PALOS VERDES STREET SAN PEDRO CA 90731-3309

DRAWING NUMBER	SHEET NUMBER
1-3513	U-01

POLAPRD1_043023_BWD

KEY NOTES:

1. SEE SD SHEETS FOR STORM DRAIN CONSTRUCTION, TYP
2. SEE SS SHEETS FOR SEWER CONSTRUCTION, TYP
3. SEE W SHEETS FOR WATER CONSTRUCTION, TYP
4. SEE E SHEETS FOR SITE ELECTRICAL CONSTRUCTION, TYP
5. SEE TL SHEETS FOR TELECOMMUNICATIONS CONSTRUCTION, TYP

NOTES:

1. SEE UR SHEETS FOR UTILITY REMOVALS.
2. SEE TIGS PROJECT FOR GRADE SEPARATION UTILITIES.

PROJECT BOUNDARY LIMITS

GUARD BOOTH

MAINTENANCE CANOPY (NIC)

HIGH MAST LIGHT (TYP)

K-RAIL (TYP)

ROADABILITY CANOPY

RESTROOM

RESTROOM (NIC)

GUARD BOOTH

OFFICE (NIC)

SUBSTATION (TYP)

MATCHLINE, SEE DRAWING U-02 FOR CONTINUATION

1U-02
U-02

COMPOSITE UTILITY PLAN - AREA 1

SCALE: 1" = 100'

N

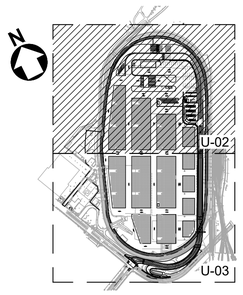

KEY MAP

100' 0' 100' 200'

SCALE: 1" = 100'

NO.	DATE	DRAWN	REVISIONS -	CHK'D	APP'D
A	3/20/25	-	30% CONCEPTUAL DESIGN		
B	4/25/25	-	FINAL CONCEPTUAL DESIGN		
C	7/18/25	-	40% DESIGN		
D	9/19/25	-	80% DESIGN		

NOT FOR CONSTRUCTION

NO.	DATE	DRAWN	REVISIONS -	CHK'D	APP'D
			80% DESIGN REVIEW SEP 19 , 2025		

Jacobs
2500 MICHELSON DRIVE, SUITE 600
IRVINE, CA 92612
T: (949) 224-7500
F: (949) 224-7501

REGISTERED PROFESSIONAL ENGINEER
MICHAEL S. MCAMIS
No. 60573
CIVIL
STATE OF CALIFORNIA

SCALE:	1"=100'
DRAWN:	E. FLORES
CHECKED:	G. NGUYEN
DESIGNED:	S. MCAMIS
	ENGINEER / ARCHITECT

TERMINAL ISLAND MARITIME SUPPORT FACILITY

COMPOSITE UTILITY PLAN - AREA 1

THE PORT OF LOS ANGELES
ENGINEERING DIVISION
425 S. PALOS VERDES STREET SAN PEDRO CA 90731-3309

DRAWING NUMBER: 1-3513
SHEET NUMBER: U-02

MATCHLINE, SEE DRAWING U-01 FOR CONTINUATION

PROJECT BOUNDARY LIMITS

HIGH MAST LIGHT (TYP)

K-RAIL (TYP)

SUBSTATION (TYP)

TERMINAL ISLAND GRADE SEPARATION (NIC) (SEE DRAWING 1-3497)

KEY NOTES:

1. SEE SD SHEETS FOR STORM DRAIN CONSTRUCTION, TYP
2. SEE SS SHEETS FOR SEWER CONSTRUCTION, TYP
3. SEE W SHEETS FOR WATER CONSTRUCTION, TYP
4. SEE E SHEETS FOR SITE ELECTRICAL CONSTRUCTION, TYP
5. SEE TL SHEETS FOR TELECOMMUNICATIONS CONSTRUCTION, TYP

NOTES:

1. SEE UR SHEETS FOR UTILITY REMOVALS.
2. SEE TIGS PROJECT FOR GRADE SEPARATION UTILITIES.

1U-03
U-03

COMPOSITE UTILITY PLAN - AREA 2

SCALE: 1" = 100'

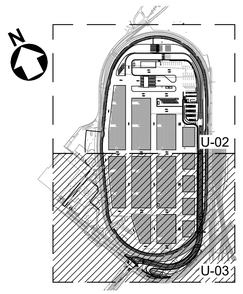

KEY MAP

100' 0' 100' 200'

SCALE: 1" = 100'

NO.	DATE	DRAWN	REVISIONS -	CHK'D	APP'D
A	3/20/25	-	30% CONCEPTUAL DESIGN		
B	4/25/25	-	FINAL CONCEPTUAL DESIGN		
C	7/18/25	-	40% DESIGN		
D	9/19/25	-	80% DESIGN		

NOT FOR CONSTRUCTION

NO.	DATE	DRAWN	REVISIONS -	CHK'D	APP'D

80% DESIGN REVIEW
SEP 19 , 2025

Jacobs
2600 MICHELSON DRIVE, SUITE 500
IRVINE, CA 92612
T: (949) 224-7500
F: (949) 224-7501

REGISTERED PROFESSIONAL ENGINEER
MICHAEL S. McANIS
No. 60573
CIVIL
STATE OF CALIFORNIA

SCALE: 1"=100'
DRAWN: E. FLORES
CHECKED: G. NGUYEN
DESIGNED: S. MCAMIS
ENGINEER / ARCHITECT

TERMINAL ISLAND MARITIME SUPPORT FACILITY

COMPOSITE UTILITY PLAN - AREA 2

THE PORT OF LOS ANGELES
ENGINEERING DIVISION
425 S. PALOS VERDES STREET SAN PEDRO CA 90731-3309

DRAWING NUMBER: 1-3513
SHEET NUMBER: U-03

POLAPRO1_042023_BWD

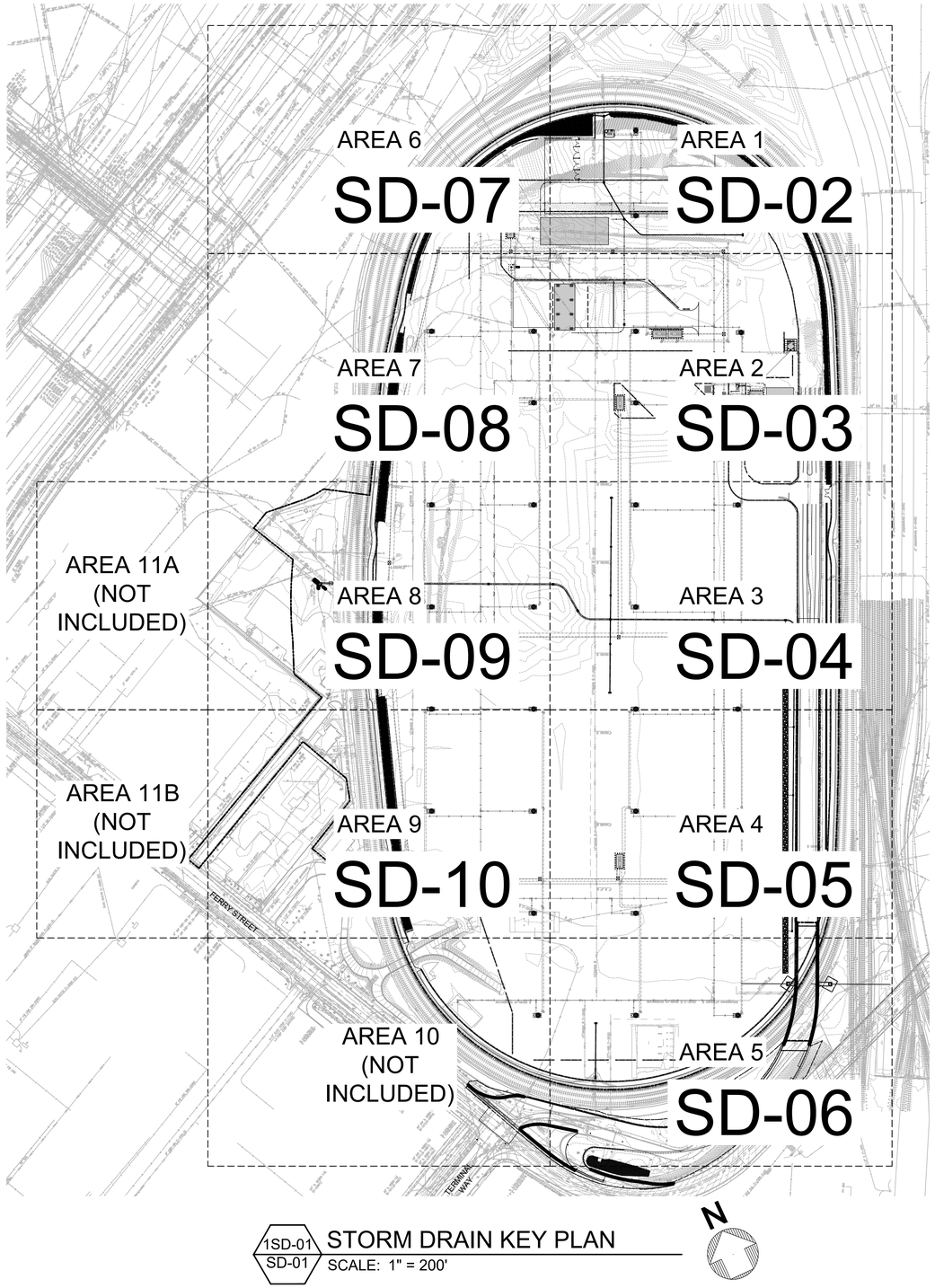

1SD-01 / SD-01 STORM DRAIN KEY PLAN
SCALE: 1" = 200'

GENERAL STORM DRAIN NOTES:

1. ELEVATIONS ARE REFERENCED TO MEAN LOWER LOW WATER (MLLW) AS ELEVATION 0.00.
2. MAINTAIN SAFE CONSTRUCTION EXCAVATION SLOPES AND SHORING AND COMPLY WITH CAL OSHA AND OTHER APPLICABLE SAFETY REGULATIONS. SOIL CONDITIONS AND COMMENTS ON SHORING ARE CONTAINED IN THE SOILS REPORT OF PROJECT SITE WHICH IS AVAILABLE FOR REVIEW IN THE CHIEF HARBOR ENGINEER'S OFFICE.
3. COMPLETE WORK CALLED FOR ON DRAWINGS, UNLESS OTHERWISE INDICATED OR IDENTIFIED AS NOT IN CONTRACT (NIC). COORDINATE WORK OUTSIDE OF PROJECT SITE LIMITS OR IN BLOCKED OUT AREAS WITH OTHER CONTRACTORS AND/OR TERMINAL OPERATORS.
4. COORDINATES ARE GIVEN IN NAD83, ZONE 5, CALIFORNIA STATE PLANE COORDINATES.
5. RCP REINFORCEMENT SHALL HAVE A MAXIMUM WATER/CEMENT RATIO OF 0.40. PER ASTM C497 TEST METHOD A, RCP SHALL HAVE A MAXIMUM ABSORPTION OF 6%.
6. RCP SHALL HAVE A MINIMUM INSIDE AND OUTSIDE CONCRETE COVER OF 1-1/2 INCHES.
7. JOINTS SHALL BE RUBBER-GASKETED. MAXIMUM JOINT GAP SHALL BE PER MANUFACTURER'S WRITTEN INSTRUCTIONS.
8. PIPE BEDDING SHALL CONFORM TO CITY OF LOS ANGELES, DEPARTMENT OF PUBLIC WORKS, BUREAU OF ENGINEERING STANDARD PLAN S-251-1.
9. GROUNDWATER TABLE VARIES ON PROJECT SITE BASED ON SEASONAL AND TIDAL CONDITIONS. THE DESIGN GROUNDWATER ELEVATION IS +5.0 FT, MLLW.
10. PVC PLASTIC PIPE FOR STORM DRAINS SHALL BE SCHEDULE 80 DWV WITH SOLVENT WELD JOINTS IN CONFORMANCE WITH RS SUBSECTION 207-17.
11. INDICATE WITH PERMANENT PAINT ON THE INSIDE SPRINGLINE OF ONE END OF EACH SECTION OF RCP THE DATE OF INSTALLATION.
12. LOCATIONS OF EXISTING SUBSTRUCTURES ARE APPROXIMATE ONLY; EXECUTE EXCAVATION WITH EXTRA CARE TO PREVENT DAMAGE TO EXISTING INSTALLATIONS. POTHOLE, IN COORDINATION WITH CORRESPONDING OWNERS, FOR ANY EXISTING SUBSTRUCTURE INSTALLATIONS TO DETERMINE THEIR EXACT LOCATIONS AND ELEVATIONS PRIOR TO EXCAVATION.
13. ANY DISCREPANCY BETWEEN DRAWINGS AND FIELD CONDITIONS SHALL BE BROUGHT TO THE ATTENTION OF ENGINEER FOR CLARIFICATION BY CONTRACTOR.
14. INSTALL GREEN DETECTION TAPE ABOVE INSTALLED STORM DRAIN PIPE PER SPECIFICATIONS.
15. WHERE PHASING LEAVES UNFINISHED STORM DRAIN LINES OR TRENCH DRAINS, PROVIDE SANDBAGS AT THE END OF PIPES AND TRENCH DRAINS FOR A TEMPORARY CAP AND EROSION CONTROL BETWEEN PHASES.
16. JOIN LOCATIONS ON DRAWINGS ARE BASED ON AVAILABLE RECORDS. DETERMINE "AS-BUILT" CONDITIONS BY EXPOSING JOIN LOCATION. PIPE LAYOUT SHALL BE ADJUSTED TO ACCOMMODATE EXISTING CONDITIONS. VERIFICATION OF EXISTING INVERT ELEVATION SHALL BE COMPLETED PRIOR TO EXCAVATION OF CONNECTING LINE.
17. IF PIPE JOINT IS DAMAGED DURING DEMOLITION ACTIVITY, CONTRACTOR SHALL REMOVE ADDITIONAL PIPE UNTIL AN UNDAMAGED JOINT IS OBTAINED.
18. STORM DRAIN INLETS, CATCH BASINS, AND MAINTENANCE HOLES SHALL BE ADJUSTED TO BE FLUSH WITH FINISHED SURFACE.
19. INSTALL STENCILS AT INLETS & CATCH BASINS PER APPROVED CITY OF LOS ANGELES STD STENCIL.
20. DETERMINE THE MEANS AND METHODS TO INSTALL STORM DRAINS AND APPURTENANT DRAINAGE SYSTEMS IN THE WET. DEVELOP AND SUBMIT WORKING DRAWINGS SIGNED AND STAMPED BY A REGISTERED ENGINEER IN CALIFORNIA SHOWING THE MEANS AND METHODS OF CONSTRUCTING STORM DRAIN SYSTEMS IN THE WET. SEE SPECIFICATIONS SECTION FOR DEWATERING.
21. CALL UNDERGROUND SERVICE ALERT (USA) (1-811-422-4133) TWO WORKING DAYS PRIOR TO CONSTRUCTION TO OBTAIN A DIG ALERT ID NUMBER. PROVIDE THE REFERENCE NUMBER OF THE DIG ALERT CONTACT AND THE ACTION BY DIG ALERT TO ENGINEER.
22. REPLACE EXISTING PAVEMENT SECTION WHERE PROPOSED STORM DRAIN SYSTEM JOINS EXISTING STORM DRAIN SYSTEM OUTSIDE PROJECT SITE LIMITS.
23. HDPE PIPE TO CONCRETE STRUCTURE CONNECTIONS SHALL BE DONE USING FLEX RESTRAINT FITTINGS BY CENTRAL PLASTICS.
24. PERFORATED HDPE PIPE SHALL CONFORM TO AASHTO PERFORATIONS CLASS I AND HAVE A MINIMUM DR11.
25. BREAKING INTO EXISTING STORM DRAIN MAINTENANCE HOLES SHALL BE DONE PER APWA STD PLAN 208-2.
26. REINFORCED CONCRETE PIPE TO CATCH BASIN CONNECTIONS SHALL BE DONE PER APWA STD PLAN 308-2.
27. FOR VERTICAL INTERFACES, BUILD BOTH SIDES IN EQUAL LIFTS. IF CONTRACTOR CHOOSES A DIFFERENT METHOD, COSTS INCURRED DUE TO THIS METHOD CHOICE SHALL BE AT THE SOLE COST AND EXPENSE OF CONTRACTOR.

LEGEND OF CONSTRUCTION NOTES

COORDINATE	
CONSTRUCT	REMODEL EXISTING
EXISTING	REMOVE AND CONSTRUCT
REMOVE	RELOCATE
NOT IN CONTRACT	ABANDON

200' 0' 200' 400'
SCALE: 1" = 200'

NO.	DATE	DRAWN	REVISIONS -	CHK'D	APP'D
C	7/18/25	-	40% DESIGN		
D	9/19/25	-	80% DESIGN		

NOT FOR CONSTRUCTION

NO.	DATE	DRAWN	REVISIONS -	CHK'D	APP'D

80% DESIGN REVIEW
SEP 19 , 2025

Jacobs
2600 MICHELSON DRIVE, SUITE 500
IRVINE, CA 92612
T (949) 224-7500
F (949) 224-7501

REGISTERED PROFESSIONAL ENGINEER — SHARON CHOI — No. C72367 — CIVIL — STATE OF CALIFORNIA

SCALE:	1"=200"
DRAWN:	H. WITZEMAN
CHECKED:	R. LUONG
DESIGNED:	S. CHOI
	ENGINEER / ARCHITECT

TERMINAL ISLAND MARITIME SUPPORT FACILITY

STORM DRAIN KEY PLAN AND NOTES

THE PORT OF LOS ANGELES
ENGINEERING DIVISION
425 S. PALOS VERDES STREET SAN PEDRO CA 90731-3309

DRAWING NUMBER	SHEET NUMBER
1-3513	SD-01

POLAPRO1_040223_BWD

STORM DRAIN CONSTRUCTION NOTES:

LEGEND OF CONSTRUCTION NOTES		
⬚ EXISTING/PROTECT	◯ CONSTRUCT	
No.	CONSTRUCTION ITEM	REFERENCE DWG
78	ALLEY GRATING BASIN (AGB)	
79	REINFORCED CONCRETE PIPE (RCP)	
80	PAVEMENT REMODELING AT CATCH BASIN	
81	CURBSIDE GRATING BASIN (CGB)	
82	JUNCTION STRUCTURE (J.S.)	
83	CORRUGATED STEEL PIPE (CSP)	
84	REINFORCED CONCRETE BOX	
85	STORM DRAIN MANHOLE	LA BOE MH EZ, MH JM, SPPWC 320-2
86	WARPED GUTTER AT CATCH BASIN	
87	CATCH BASIN NO.36	
88	CATCH BASIN NO. 44	
89	CATCH BASIN NO. 47	
90	LOW FLOW INLET STRUCTURE	
91	LOW FLOW OUTLET STRUCTURE	
92	SIDEWALK OUTLET STRUCTURE	
93	SIDEWALK CULVERT WITH STEEL PLATE COVER	
94	SEAL PER DETAIL	
95	REINFORCED CONCRETE PIPE-LINE	
96	SEAL WITH 8" BRICK & MORTAR	
97	CONCRETE COLLAR	
98	MONOLITHIC CONNECTION	
99	SIDE OPENING CATCH BASIN W,V,B	
100	TRENCH DRAIN	
101	DRAIN CLEAN OUT (DCO)	4SD-18
102	FILTER INSERT	OLDCASTLE FLOGARD PLUS
103	HDPE PIPE, SOLID WALL	
104	HDPE PIPE, PERFORATED	
105	CATCH BASIN GRATE AND FRAME	LAHD H-101-01
106	SAND FILTER BMP	1SD-18, 2SD-18
107	OBSERVATION WELL	3SD-18

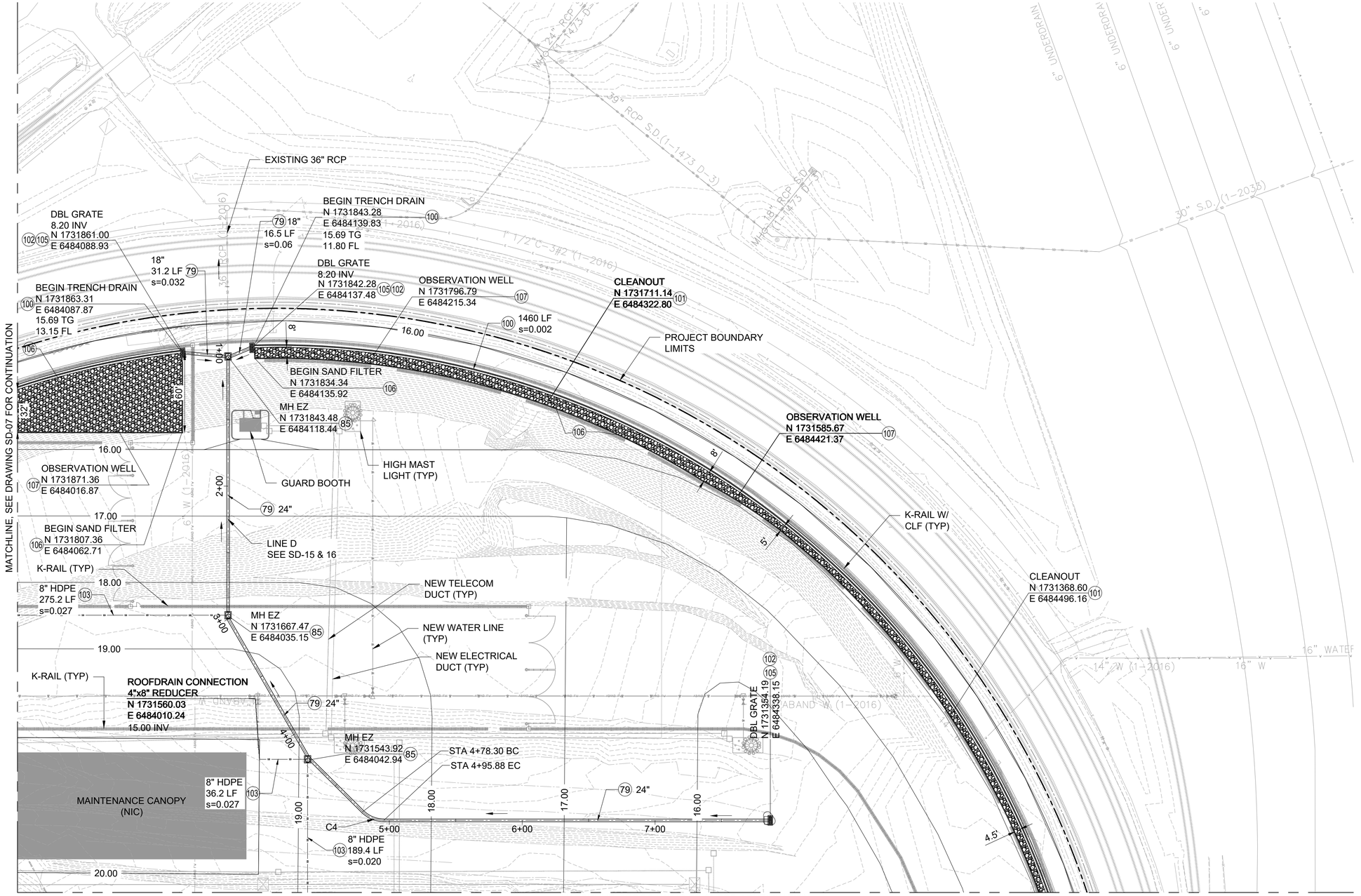

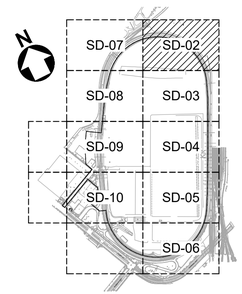

KEY MAP

40' 0' 40' 80'

SCALE: 1" = 40'

1SD-02 / SD-02 STORM DRAIN PLAN - AREA 1

SCALE: 1" = 40'

Curve Table: Alignments					
Curve #	Radius	Length	Chord Direction	Start Point	End Point
C4	22.50	17.58	S42° 18' 51.06"E	(6484063.67,1731491.16)	(6484075.20,1731478.49)

NO.	DATE	DRAWN	REVISIONS -	CHK'D	APP'D
C	7/18/25	-	40% DESIGN		
D	9/19/25	-	80% DESIGN		

NOT FOR CONSTRUCTION

80% DESIGN REVIEW SEP 19 , 2025

Jacobs
2600 MICHELSON DRIVE, SUITE 500
IRVINE, CA 92612
T: (949) 224-7500
F: (949) 224-7501

REGISTERED PROFESSIONAL ENGINEER SHARON CHOI No. C72367 CIVIL STATE OF CALIFORNIA

SCALE: 1"=40'
DRAWN: H. WITZEMAN
CHECKED: R. LUONG
DESIGNED: S. CHOI
ENGINEER / ARCHITECT

TERMINAL ISLAND MARITIME SUPPORT FACILITY

STORM DRAIN PLAN - AREA 1

THE PORT OF LOS ANGELES
ENGINEERING DIVISION
425 S. PALOS VERDES STREET SAN PEDRO CA 90731-3309

DRAWING NUMBER: 1-3513
SHEET NUMBER: SD-02

POLAPRO1_04/2023_BWD

MATCHLINE, SEE DRAWING SD-02 FOR CONTINUATION

ROOFDRAIN CONNECTION
4"x8" REDUCER
N 1731441.79
E 6483822.83
15.00 INV

8" HDPE
103 189.4 LF
s=0.020

MH EZ
N 1731374.87
E 6483963.01
12.00 INV
85

8" HDPE
103 155.1 LF
s=0.020

8" HDPE
103 122.1 LF
s=0.010

ROADABILITY CANOPY

ROOFDRAIN CONNECTION
4"x8" REDUCER
N 1731308.91
E 6483759.96
15.00 INV

MH EZ
N 1731264.49
E 6483910.82
13.20 INV
85

8" HDPE
103 170.4 LF
s=0.011

K-RAIL (TYP)

HIGH MAST
LIGHT (TYP)

OBSERVATION WELL
107 N 1731167.00
E 6484492.43

4.5'

5'

8'

CLEANOUT
101 N 1731028.49
E 6484448.54

106

100 1460 LF
s=0.002

RESTROOM

K-RAIL (TYP)

NEW SEWER LINE
(TYP)

GUARD BOOTH

OBSERVATION WELL
107 N 1730849.09
E 6484372.49

SUBSTATION (TYP)

PROJECT BOUNDARY
LIMITS

RESTROOM (NIC)

OFFICE (NIC)

NEW WATER LINE
(TYP)

NEW ELECTRICAL
DUCT (TYP)

NEW TELECOM
DUCT (TYP)

K-RAIL W/
CLF (TYP)

8'

NEW ELECTRICAL
DUCT (TYP)

1+00

MATCHLINE, SEE DRAWING SD-04 FOR CONTINUATION

MATCHLINE, SEE DRAWING SD-08 FOR CONTINUATION

STORM DRAIN CONSTRUCTION NOTES:

LEGEND OF CONSTRUCTION NOTES		
EXISTING/PROTECT	CONSTRUCT	
No.	CONSTRUCTION ITEM	REFERENCE DWG
78	ALLEY GRATING BASIN (AGB)	
79	REINFORCED CONCRETE PIPE (RCP)	
80	PAVEMENT REMODELING AT CATCH BASIN	
81	CURBSIDE GRATING BASIN (CGB)	
82	JUNCTION STRUCTURE (J.S.)	
83	CORRUGATED STEEL PIPE (CSP)	
84	REINFORCED CONCRETE BOX	
85	STORM DRAIN MANHOLE	LA BOE MH EZ, MH JM, SPPWC 320-2
86	WARPED GUTTER AT CATCH BASIN	
87	CATCH BASIN NO.36	
88	CATCH BASIN NO. 44	
89	CATCH BASIN NO. 47	
90	LOW FLOW INLET STRUCTURE	
91	LOW FLOW OUTLET STRUCTURE	
92	SIDEWALK OUTLET STRUCTURE	
93	SIDEWALK CULVERT WITH STEEL PLATE COVER	
94	SEAL PER DETAIL	
95	REINFORCED CONCRETE PIPE-LINE	
96	SEAL WITH 8" BRICK & MORTAR	
97	CONCRETE COLLAR	
98	MONOLITHIC CONNECTION	
99	SIDE OPENING CATCH BASIN W,V,B	
100	TRENCH DRAIN	
101	DRAIN CLEAN OUT (DCO)	4SD-18
102	FILTER INSERT	OLDCASTLE FLOGARD PLUS
103	HDPE PIPE, SOLID WALL	
104	HDPE PIPE, PERFORATED	
105	CATCH BASIN GRATE AND FRAME	LAHD H-101-01
106	SAND FILTER BMP	1SD-18, 2SD-18
107	OBSERVATION WELL	3SD-18

Curve Table: Alignments

Curve #	Radius	Length	Chord Direction	Start Point	End Point
C1	45.00	47.12	S34° 25' 32.34"E	(6483397.24,1730663.37)	(6483422.68,1730626.25)
C2	44.98	47.13	S34° 25' 20.88"E	(6483427.78,1730560.36)	(6483453.22,1730523.23)
C3	22.50	35.42	S19° 19' 34.24"E	(6483971.67,1730275.12)	(6483982.21,1730245.04)

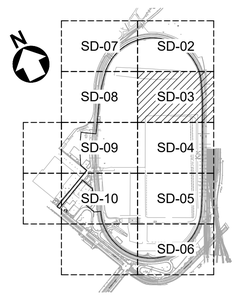

KEY MAP

40' 0' 40' 80'

SCALE: 1" = 40'

MATCHLINE, SEE DRAWING SD-04 FOR CONTINUATION

1SD-03
SD-03

STORM DRAIN PLAN - AREA 2

SCALE: 1" = 40'

N

NO.	DATE	DRAWN	REVISIONS -	CHK'D	APP'D
C	7/18/25	-	40% DESIGN		
D	9/19/25	-	80% DESIGN		

NOT FOR CONSTRUCTION

NO.	DATE	DRAWN	REVISIONS -	CHK'D	APP'D

80% DESIGN REVIEW
SEP 19 , 2025

Jacobs
2600 MICHELSON DRIVE, SUITE 500
IRVINE, CA 92612
T: (949) 224-7500
F: (949) 224-7501

REGISTERED PROFESSIONAL ENGINEER
SHARON CHOI
No. C72367
CIVIL
STATE OF CALIFORNIA

SCALE:	1"=40'
DRAWN:	H. WITZEMAN
CHECKED:	R. LUONG
DESIGNED:	S. CHOI
	ENGINEER / ARCHITECT

TERMINAL ISLAND MARITIME SUPPORT FACILITY

STORM DRAIN PLAN - AREA 2

THE PORT OF LOS ANGELES
ENGINEERING DIVISION
425 S. PALOS VERDES STREET SAN PEDRO CA 90731-3309

DRAWING NUMBER: 1-3513
SHEET NUMBER: SD-03

POLAPROT_040223_BWD

MATCHLINE, SEE DRAWING SD-03 FOR CONTINUATION

MATCHLINE, SEE DRAWING SD-09 FOR CONTINUATION

MATCHLINE, SEE DRAWING SD-05 FOR CONTINUATION

DBL GRATE
N 1730820.76
E 6483659.03 (105)

SINGLE GRATE
N 1730691.35
E 6483596.54 (105)

SINGLE GRATE
N 1730562.59
E 6483534.38 (105)

SINGLE GRATE
N 1730433.81
E 6483472.20 (105)

DBL GRATE
N 1730305.03
E 6483410.03 (105)

MH 320-2
N 1730664.83
E 6483395.35 (85)

MH 320-2
N 1730562.72
E 6483428.10 (85)

MH 320-2
N 1730499.30
E 6483503.82 (85)

MH 320-2
N 1730369.22
E 6483775.63 (85)

MH 320-2
N 1730276.89
E 6483968.57 (85)

MH EZ
N 1730199.29
E 6483960.40 (85)

STA 17+54.57 BC
STA 18+01.70 EC
C1
18+00

C2
19+00

STA 18+67.79 BC
STA 19+14.93 EC

20+00
21+00
22+00
23+00
24+00
25+00
26+00
27+00

2+00
3+00
4+00
5+00
6+00
7+00

24" (79)
48" (79)
36" (79)
18" (79)

NEW WATER LINE (TYP)

LINE A
SEE SD-12

LINE B
SEE SD-14

LINE C
SEE SD-14

LINE A
SEE SD-12 & 13

BEGIN SAND FILTER
N 1730246.44
E 6483945.03 (106)

8" (103)
8" (104)
15'

CLEANOUT
N 1730586.91
E 6484252.31 (101)

END SAND FILTER
N 1730586.17
E 6484247.80 (106)

END TRENCH DRAIN
N 1730582.20
E 6484256.45 (100)
15.72 TG
14.72 FL

END TRENCH DRAIN
N 1730536.59
E 6484223.17 (100)
15.80 TG
14.80 FL

NEW ELECTRICAL DUCT (TYP)

NEW TELECOMMUNICATIONS DUCT (TYP)

411 LF
s=0.002 (100)

STA 24+89.69 BC
C3
STA 25+25.11 EC

79 24"
13.50 INV (96)

13.20 INV

79 18", 8 LF

79 18", 34 LF
s=0.009

PROJECT BOUNDARY LIMITS

BEGIN TRENCH DRAIN
N 1730164.83
E 6484047.80 (100)
15.80 TG
14.00 FL

SINGLE GRATE
N 1730162.89
E 6484046.91 (105)(102)

BEGIN TRENCH DRAIN
N 1730160.97
E 6484045.95 (100)
15.80 TG
13.53 FL

JOIN CATCH BASIN INV
SEE 1-3419
N 1730149.88
E 6484013.92

SINGLE GRATE
N 1730162.85
E 6483942.53 (105)(102)

16.00
17.00
18.00
19.00

14"ABAND W (1-2016)
10" ABAND W (1-2016)
6" UNDERDRAIN
18" S.D

STORM DRAIN CONSTRUCTION NOTES:

LEGEND OF CONSTRUCTION NOTES

EXISTING/PROTECT CONSTRUCT

No.	CONSTRUCTION ITEM	REFERENCE DWG
78	ALLEY GRATING BASIN (AGB)	
79	REINFORCED CONCRETE PIPE (RCP)	
80	PAVEMENT REMODELING AT CATCH BASIN	
81	CURBSIDE GRATING BASIN (CGB)	
82	JUNCTION STRUCTURE (J.S.)	
83	CORRUGATED STEEL PIPE (CSP)	
84	REINFORCED CONCRETE BOX	
85	STORM DRAIN MANHOLE	LA BOE MH EZ, MH JM, SPPWC 320-2
86	WARPED GUTTER AT CATCH BASIN	
87	CATCH BASIN NO.36	
88	CATCH BASIN NO. 44	
89	CATCH BASIN NO. 47	
90	LOW FLOW INLET STRUCTURE	
91	LOW FLOW OUTLET STRUCTURE	
92	SIDEWALK OUTLET STRUCTURE	
93	SIDEWALK CULVERT WITH STEEL PLATE COVER	
94	SEAL PER DETAIL	
95	REINFORCED CONCRETE PIPE-LINE	
96	SEAL WITH 8" BRICK & MORTAR	
97	CONCRETE COLLAR	
98	MONOLITHIC CONNECTION	
99	SIDE OPENING CATCH BASIN W,V,B	
100	TRENCH DRAIN	
101	DRAIN CLEAN OUT (DCO)	4SD-18
102	FILTER INSERT	OLDCASTLE FLOGARD PLUS
103	HDPE PIPE, SOLID WALL	
104	HDPE PIPE, PERFORATED	
105	CATCH BASIN GRATE AND FRAME	LAHD H-101-01
106	SAND FILTER BMP	1SD-18, 2SD-18
107	OBSERVATION WELL	3SD-18

KEY MAP

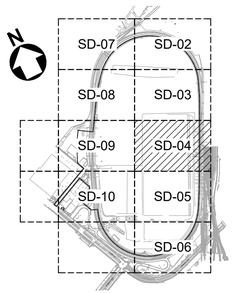

40' 0' 40' 80'

SCALE: 1" = 40'

1SD-04 / SD-04 STORM DRAIN PLAN - AREA 3

SCALE: 1" = 40'

NO.	DATE	DRAWN	REVISIONS -	CHK'D	APP'D
C	7/18/25	-	40% DESIGN		
D	9/19/25	-	80% DESIGN		

NOT FOR CONSTRUCTION

80% DESIGN REVIEW
SEP 19 , 2025

Jacobs
2880 MICHELSON DRIVE, SUITE 500
IRVINE, CA 92612
T: (949) 224-7500
F: (949) 224-7501

REGISTERED PROFESSIONAL ENGINEER
SHARON CHOI
No. C72367
CIVIL
STATE OF CALIFORNIA

SCALE: 1"=40'
DRAWN: H. WITZEMAN
CHECKED: R. LUONG
DESIGNED: S. CHOI
ENGINEER / ARCHITECT

TERMINAL ISLAND MARITIME SUPPORT FACILITY

STORM DRAIN PLAN - AREA 3

THE PORT OF LOS ANGELES
ENGINEERING DIVISION
425 S. PALOS VERDES STREET SAN PEDRO CA 90731-3309

DRAWING NUMBER: 1-3513
SHEET NUMBER: SD-04

POLAPRO1_042023_BWD

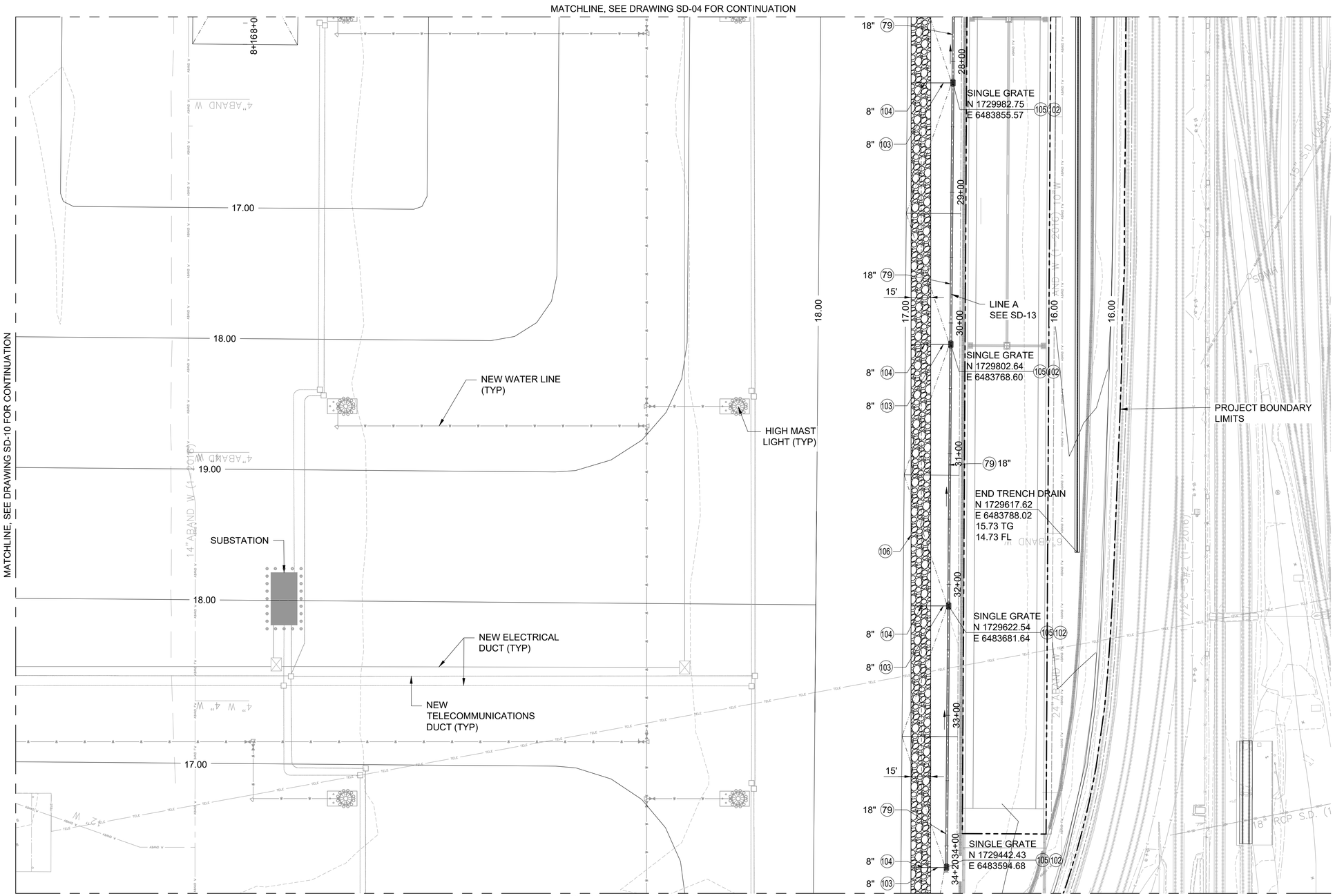

STORM DRAIN CONSTRUCTION NOTES:

LEGEND OF CONSTRUCTION NOTES

EXISTING/PROTECT ◯ CONSTRUCT

No.	CONSTRUCTION ITEM	REFERENCE DWG
78	ALLEY GRATING BASIN (AGB)	
79	REINFORCED CONCRETE PIPE (RCP)	
80	PAVEMENT REMODELING AT CATCH BASIN	
81	CURBSIDE GRATING BASIN (CGB)	
82	JUNCTION STRUCTURE (J.S.)	
83	CORRUGATED STEEL PIPE (CSP)	
84	REINFORCED CONCRETE BOX	
85	STORM DRAIN MANHOLE	LA BOE MH EZ, MH JM, SPPWC 320-2
86	WARPED GUTTER AT CATCH BASIN	
87	CATCH BASIN NO.36	
88	CATCH BASIN NO. 44	
89	CATCH BASIN NO. 47	
90	LOW FLOW INLET STRUCTURE	
91	LOW FLOW OUTLET STRUCTURE	
92	SIDEWALK OUTLET STRUCTURE	
93	SIDEWALK CULVERT WITH STEEL PLATE COVER	
94	SEAL PER DETAIL	
95	REINFORCED CONCRETE PIPE-LINE	
96	SEAL WITH 8" BRICK & MORTAR	
97	CONCRETE COLLAR	
98	MONOLITHIC CONNECTION	
99	SIDE OPENING CATCH BASIN W,V,B	
100	TRENCH DRAIN	
101	DRAIN CLEAN OUT (DCO)	4SD-18
102	FILTER INSERT	OLDCASTLE FLOGARD PLUS
103	HDPE PIPE, SOLID WALL	
104	HDPE PIPE, PERFORATED	
105	CATCH BASIN GRATE AND FRAME	LAHD H-101-01
106	SAND FILTER BMP	1SD-18, 2SD-18
107	OBSERVATION WELL	3SD-18

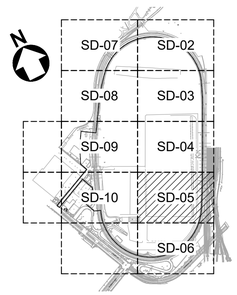

KEY MAP

40' 0' 40' 80'

SCALE: 1" = 40'

1SD-05 / SD-05 STORM DRAIN PLAN - AREA 4

SCALE: 1" = 40'

NO.	DATE	DRAWN	REVISIONS -	CHK'D	APP'D
C	7/18/25	-	40% DESIGN		
D	9/19/25	-	80% DESIGN		

NOT FOR CONSTRUCTION

80% DESIGN REVIEW SEP 19 , 2025

Jacobs
2600 MICHELSON DRIVE, SUITE 600
IRVINE, CA 92612
T: (949) 224-7500
F: (949) 224-7501

REGISTERED PROFESSIONAL ENGINEER SHARON CHOI No. C72367 CIVIL STATE OF CALIFORNIA

SCALE: 1"=40'
DRAWN: H. WITZEMAN
CHECKED: R. LUONG
DESIGNED: S. CHOI
ENGINEER / ARCHITECT

TERMINAL ISLAND MARITIME SUPPORT FACILITY

STORM DRAIN PLAN - AREA 4

THE PORT OF LOS ANGELES
ENGINEERING DIVISION
425 S. PALOS VERDES STREET SAN PEDRO CA 90731-3309

DRAWING NUMBER 1-3513

SHEET NUMBER SD-05

POLAPRD1_042023_BWD

MATCHLINE, SEE DRAWING SD-05 FOR CONTINUATION

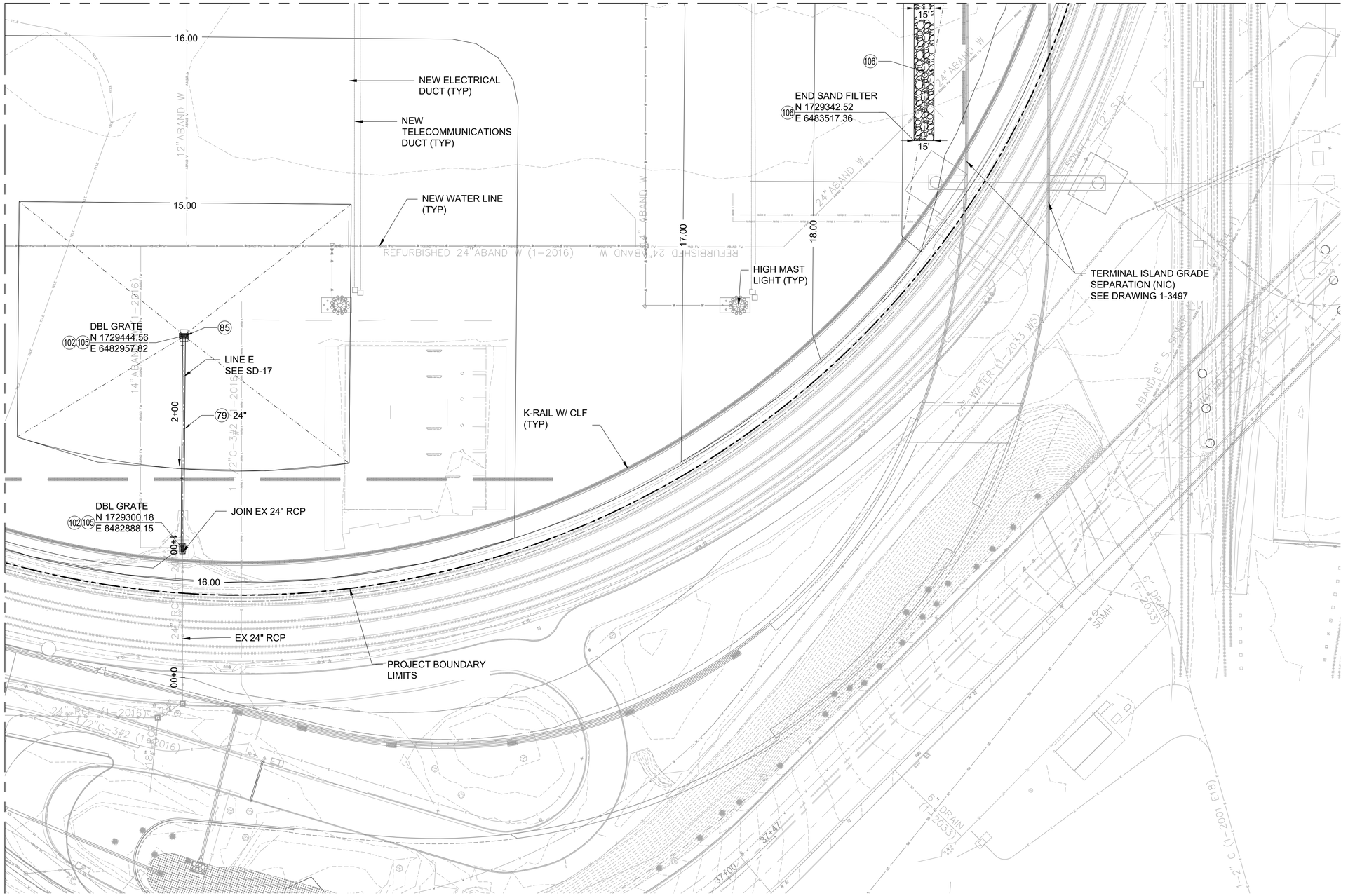

STORM DRAIN CONSTRUCTION NOTES:

LEGEND OF CONSTRUCTION NOTES		
☐ EXISTING/PROTECT ◯ CONSTRUCT		
No.	CONSTRUCTION ITEM	REFERENCE DWG
78	ALLEY GRATING BASIN (AGB)	
79	REINFORCED CONCRETE PIPE (RCP)	
80	PAVEMENT REMODELING AT CATCH BASIN	
81	CURBSIDE GRATING BASIN (CGB)	
82	JUNCTION STRUCTURE (J.S.)	
83	CORRUGATED STEEL PIPE (CSP)	
84	REINFORCED CONCRETE BOX	
85	STORM DRAIN MANHOLE	LA BOE MH EZ, MH JM, SPPWC 320-2
86	WARPED GUTTER AT CATCH BASIN	
87	CATCH BASIN NO.36	
88	CATCH BASIN NO. 44	
89	CATCH BASIN NO. 47	
90	LOW FLOW INLET STRUCTURE	
91	LOW FLOW OUTLET STRUCTURE	
92	SIDEWALK OUTLET STRUCTURE	
93	SIDEWALK CULVERT WITH STEEL PLATE COVER	
94	SEAL PER DETAIL	
95	REINFORCED CONCRETE PIPE-LINE	
96	SEAL WITH 8" BRICK & MORTAR	
97	CONCRETE COLLAR	
98	MONOLITHIC CONNECTION	
99	SIDE OPENING CATCH BASIN W,V,B	
100	TRENCH DRAIN	
101	DRAIN CLEAN OUT (DCO)	4SD-18
102	FILTER INSERT	OLDCASTLE FLOGARD PLUS
103	HDPE PIPE, SOLID WALL	
104	HDPE PIPE, PERFORATED	
105	CATCH BASIN GRATE AND FRAME	LAHD H-101-01
106	SAND FILTER BMP	1SD-18, 2SD-18
107	OBSERVATION WELL	3SD-18

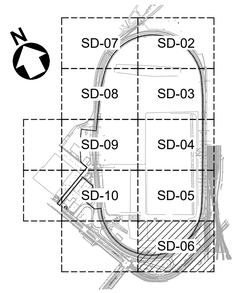

KEY MAP

40' 0' 40' 80'

SCALE: 1" = 40'

1SD-06 / SD-06 STORM DRAIN PLAN - AREA 5

SCALE: 1" = 40'

NO.	DATE	DRAWN	REVISIONS -	CHK'D	APP'D
C	7/18/25	-	40% DESIGN		
D	9/19/25	-	80% DESIGN		

NOT FOR CONSTRUCTION

NO.	DATE	DRAWN	REVISIONS -	CHK'D	APP'D

80% DESIGN REVIEW SEP 19 , 2025

Jacobs
2050 MICHELSON DRIVE, SUITE 300
IRVINE, CA 92612
T: (949) 224-7500
F: (949) 224-7501

REGISTERED PROFESSIONAL ENGINEER SHARON CHOI No. C72367 CIVIL STATE OF CALIFORNIA

SCALE:	1"=40'
DRAWN:	H. WITZEMAN
CHECKED:	R. LUONG
DESIGNED:	S. CHOI
	ENGINEER / ARCHITECT

TERMINAL ISLAND MARITIME SUPPORT FACILITY

STORM DRAIN PLAN - AREA 5

THE PORT OF LOS ANGELES
ENGINEERING DIVISION
425 S. PALOS VERDES STREET SAN PEDRO CA 90731-3309

DRAWING NUMBER: 1-3513

SHEET NUMBER: SD-06

POLAPRO1_042023_BWD

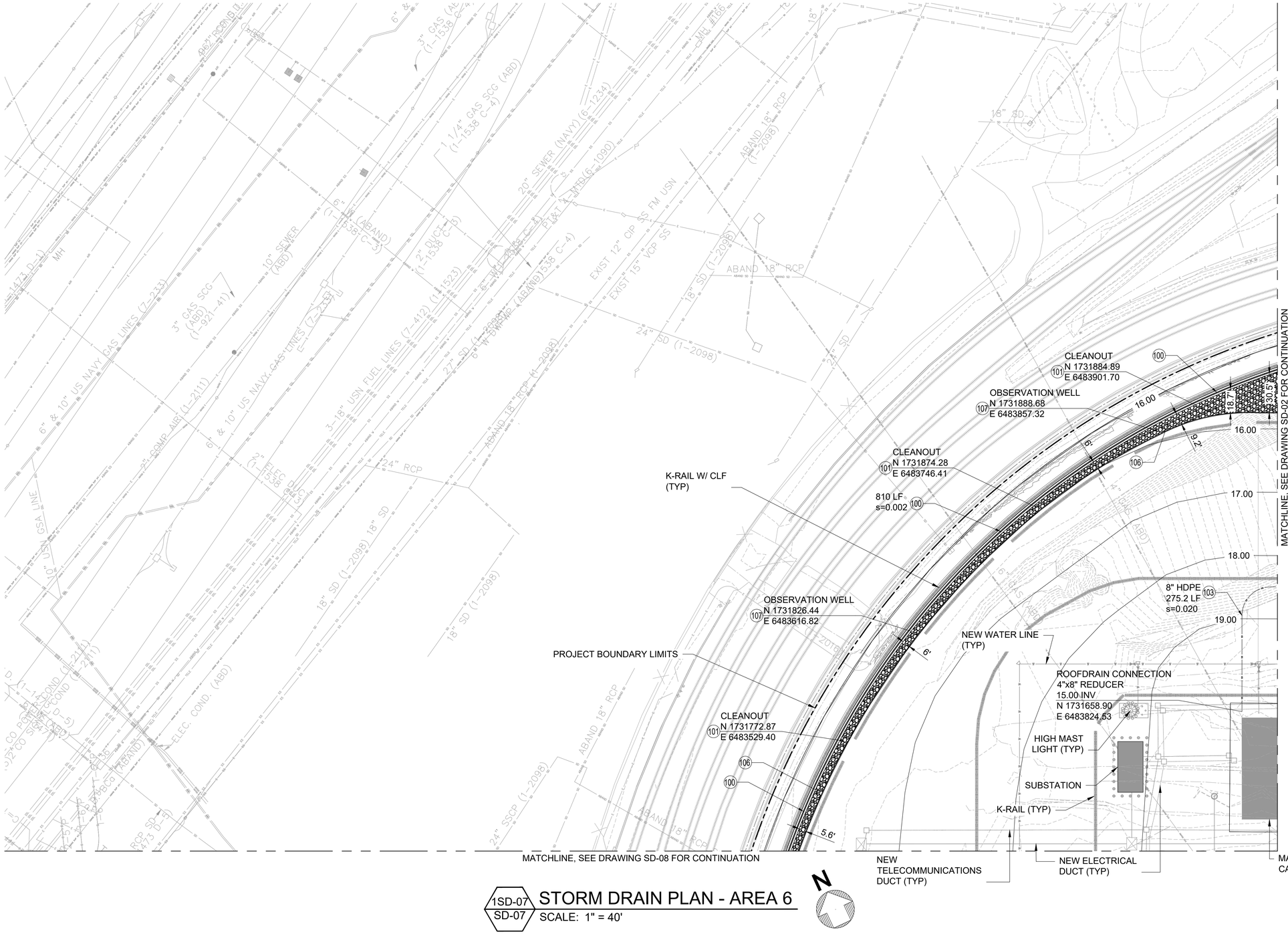
6" & 10" US NAVY GAS LINES (7-233)
6" & 10" US NAVY GAS LINES (7-412) (1-2111)
3" GAS SCG (ABD) (1-921-41)
10" SEWER (ABD)
2" COMP AIR (1-2111)
2" ELEC COND (1-2111)
3-18" USN FUEL LINES (7-412) (1-1523)
2" ELEC COND (1-2111)
2" DUCT (1-1538 C-5)
1 1/4" GAS SCG (ABD) (1-1538 C-4)
3" GAS (ABD) (1-1538 C-4)
20" SEWER (NAVY) (6-1234)
PIPE & WIRE (6-1090)
6" W/ CABLES (1-2098)
6" W/ CABLES (ABAND) (1-2098)
EXIST 12" CIP SS FM USN
EXIST 15" VCP SS
18" SD (1-2098)
ABAND 18" RCP
24" SD (1-2098)
ABAND 18" RCP (1-2098)
24" RCP
18" SD
ABAND 18" RCP
24" SD
24" SSCP (1-2098)
ABAND 18" RCP
ABAND 18" RCP
18" SD (1-2098)
18" SD (1-2098)
24" RCP
RCP SD-5 (473 D-1)
MH
GSA LINE
2" CO POWER COND (1-2111)
2" CO SIGNAL COND (1-2111)
2" ELEC COND (ABAND) (1-2111)
2" ELEC COND (ABAND) (1-2111)
2" ELEC COND (ABAND)

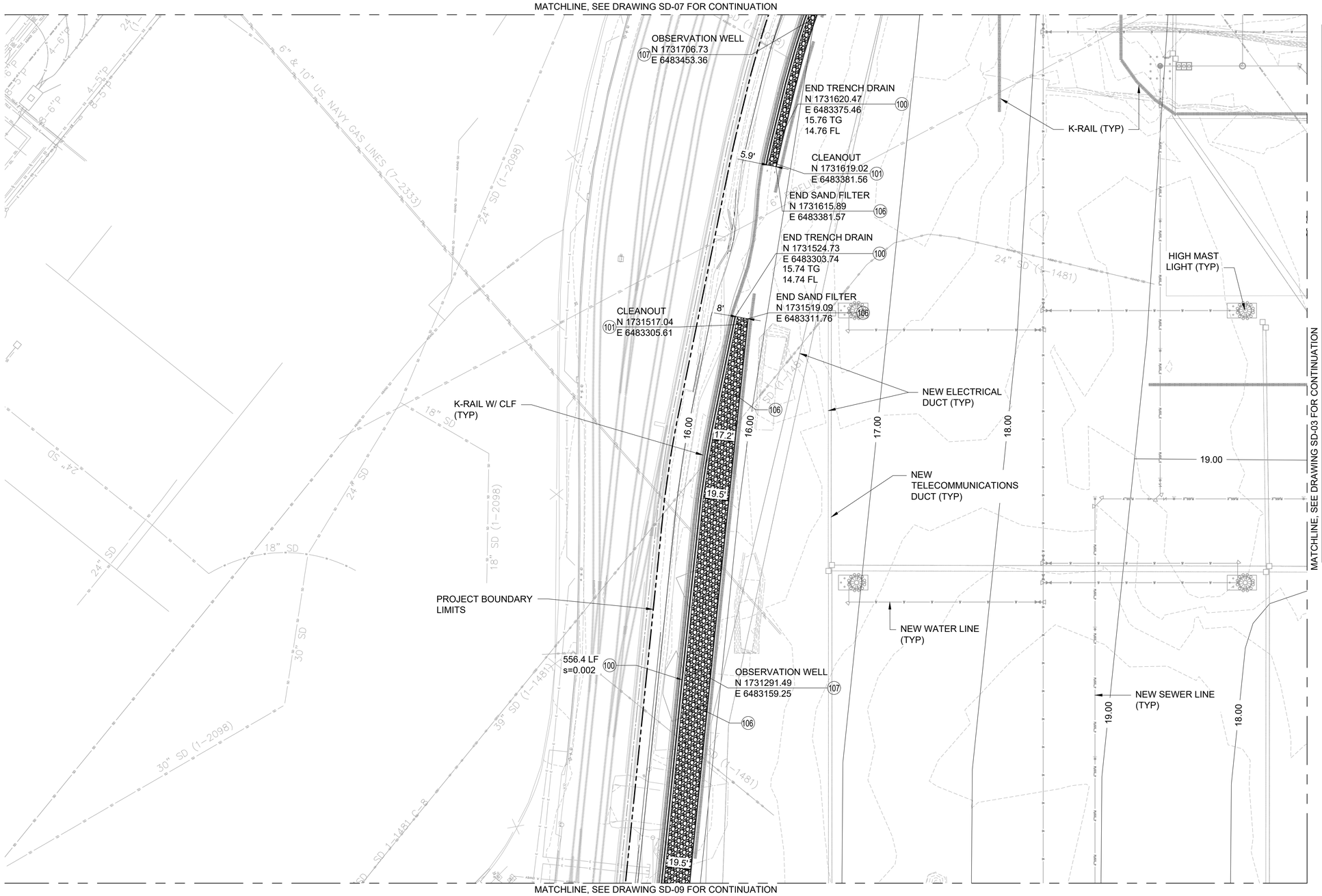

STORM DRAIN CONSTRUCTION NOTES:

LEGEND OF CONSTRUCTION NOTES

EXISTING/PROTECT — CONSTRUCT

No.	CONSTRUCTION ITEM	REFERENCE DWG
78	ALLEY GRATING BASIN (AGB)	
79	REINFORCED CONCRETE PIPE (RCP)	
80	PAVEMENT REMODELING AT CATCH BASIN	
81	CURBSIDE GRATING BASIN (CGB)	
82	JUNCTION STRUCTURE (J.S.)	
83	CORRUGATED STEEL PIPE (CSP)	
84	REINFORCED CONCRETE BOX	
85	STORM DRAIN MANHOLE	LA BOE MH EZ, MH JM, SPPWC 320-2
86	WARPED GUTTER AT CATCH BASIN	
87	CATCH BASIN NO.36	
88	CATCH BASIN NO. 44	
89	CATCH BASIN NO. 47	
90	LOW FLOW INLET STRUCTURE	
91	LOW FLOW OUTLET STRUCTURE	
92	SIDEWALK OUTLET STRUCTURE	
93	SIDEWALK CULVERT WITH STEEL PLATE COVER	
94	SEAL PER DETAIL	
95	REINFORCED CONCRETE PIPE-LINE	
96	SEAL WITH 8" BRICK & MORTAR	
97	CONCRETE COLLAR	
98	MONOLITHIC CONNECTION	
99	SIDE OPENING CATCH BASIN W,V,B	
100	TRENCH DRAIN	
101	DRAIN CLEAN OUT (DCO)	4SD-18
102	FILTER INSERT	OLDCASTLE FLOGARD PLUS
103	HDPE PIPE, SOLID WALL	
104	HDPE PIPE, PERFORATED	
105	CATCH BASIN GRATE AND FRAME	LAHD H-101-01
106	SAND FILTER BMP	1SD-18, 2SD-18
107	OBSERVATION WELL	3SD-18

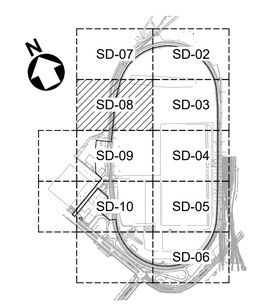

KEY MAP

40' 0' 40' 80'

SCALE: 1" = 40'

1SD-08 / SD-08 STORM DRAIN PLAN - AREA 7

SCALE: 1" = 40'

NO.	DATE	DRAWN	REVISIONS -	CHK'D	APP'D
C	7/18/25	-	40% DESIGN		
D	9/19/25	-	80% DESIGN		

NOT FOR CONSTRUCTION

NO.	DATE	DRAWN	REVISIONS -	CHK'D	APP'D

80% DESIGN REVIEW
SEP 19 , 2025

Jacobs
2600 MICHELSON DRIVE, SUITE 500
IRVINE, CA 92612
T: (949) 224-7500
F: (949) 224-7501

REGISTERED PROFESSIONAL ENGINEER SHARON CHOI No. C72367 CIVIL STATE OF CALIFORNIA

SCALE: 1"=40'
DRAWN: H. WITZEMAN
CHECKED: R. LUONG
DESIGNED: S. CHOI
ENGINEER / ARCHITECT

TERMINAL ISLAND MARITIME SUPPORT FACILITY

STORM DRAIN PLAN - AREA 7

THE PORT OF LOS ANGELES
ENGINEERING DIVISION
425 S. PALOS VERDES STREET SAN PEDRO CA 90731-3309

DRAWING NUMBER 1-3513

SHEET NUMBER SD-08

POLAPRO1_04/2023_BWD

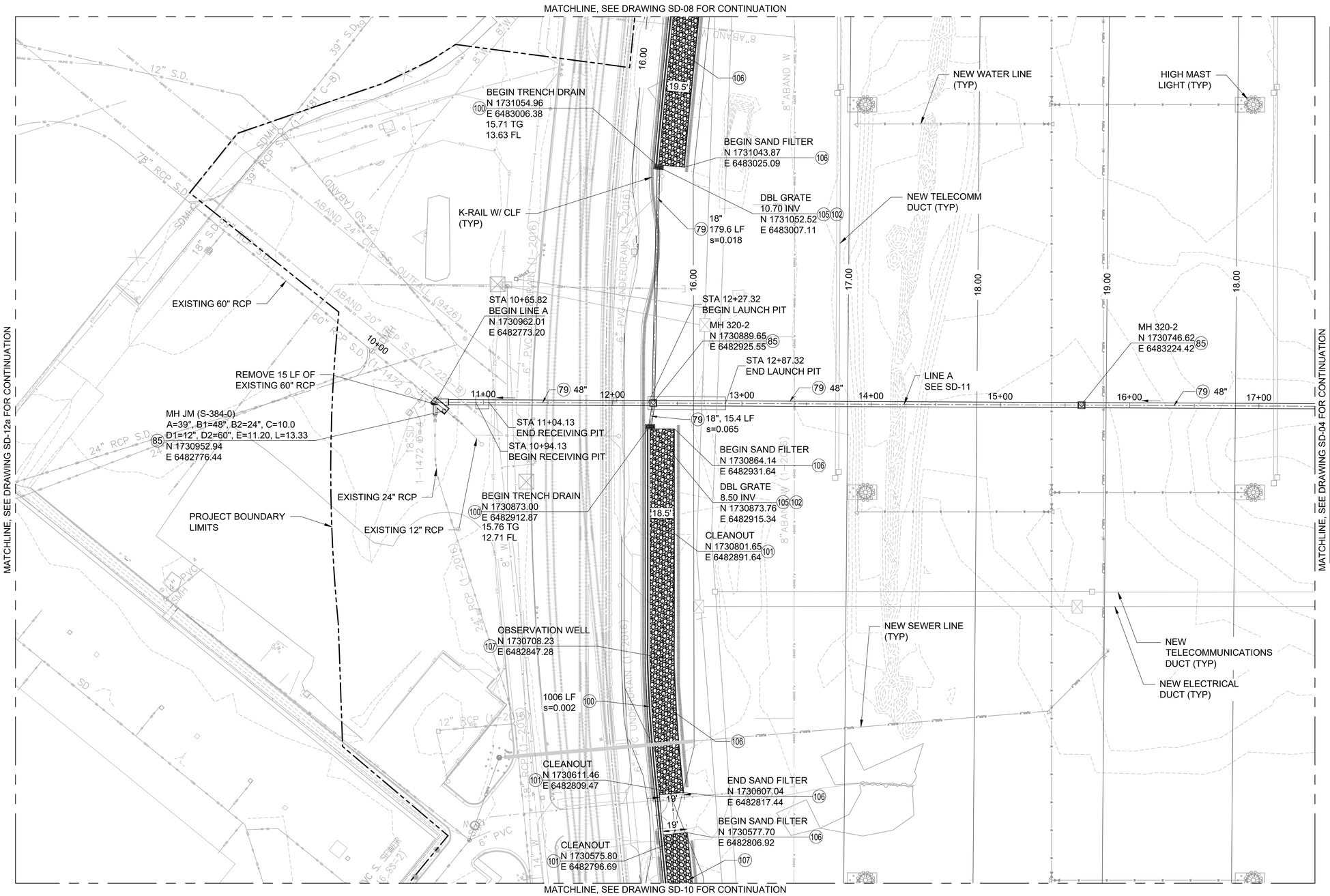

STORM DRAIN CONSTRUCTION NOTES:

LEGEND OF CONSTRUCTION NOTES

EXISTING/PROTECT ◯ CONSTRUCT

No.	CONSTRUCTION ITEM	REFERENCE DWG
78	ALLEY GRATING BASIN (AGB)	
79	REINFORCED CONCRETE PIPE (RCP)	
80	PAVEMENT REMODELING AT CATCH BASIN	
81	CURBSIDE GRATING BASIN (CGB)	
82	JUNCTION STRUCTURE (J.S.)	
83	CORRUGATED STEEL PIPE (CSP)	
84	REINFORCED CONCRETE BOX	
85	STORM DRAIN MANHOLE	LA BOE MH EZ, MH JM, SPPWC 320-2
86	WARPED GUTTER AT CATCH BASIN	
87	CATCH BASIN NO.36	
88	CATCH BASIN NO. 44	
89	CATCH BASIN NO. 47	
90	LOW FLOW INLET STRUCTURE	
91	LOW FLOW OUTLET STRUCTURE	
92	SIDEWALK OUTLET STRUCTURE	
93	SIDEWALK CULVERT WITH STEEL PLATE COVER	
94	SEAL PER DETAIL	
95	REINFORCED CONCRETE PIPE-LINE	
96	SEAL WITH 8" BRICK & MORTAR	
97	CONCRETE COLLAR	
98	MONOLITHIC CONNECTION	
99	SIDE OPENING CATCH BASIN W,V,B	
100	TRENCH DRAIN	
101	DRAIN CLEAN OUT (DCO)	4SD-18
102	FILTER INSERT	OLDCASTLE FLOGARD PLUS
103	HDPE PIPE, SOLID WALL	
104	HDPE PIPE, PERFORATED	
105	CATCH BASIN GRATE AND FRAME	LAHD H-101-01
106	SAND FILTER BMP	1SD-18, 2SD-18
107	OBSERVATION WELL	3SD-18

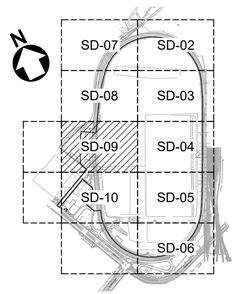

KEY MAP

40' 0' 40' 80'

SCALE: 1" = 40'

1SD-09 / SD-09 STORM DRAIN PLAN - AREA 8

SCALE: 1" = 40'

NO.	DATE	DRAWN	REVISIONS -	CHK'D	APP'D
C	7/18/25	-	40% DESIGN		
D	9/19/25	-	80% DESIGN		

NOT FOR CONSTRUCTION

80% DESIGN REVIEW
SEP 19 , 2025

Jacobs
2900 MICHELSON DRIVE, SUITE 500
IRVINE, CA 92612
T: (949) 224-7500
F: (949) 224-7501

REGISTERED PROFESSIONAL ENGINEER
SHARON CHOI
No. C72367
CIVIL
STATE OF CALIFORNIA

SCALE: 1"=40'
DRAWN: H. WITZEMAN
CHECKED: R. LUONG
DESIGNED: S. CHOI
ENGINEER / ARCHITECT

TERMINAL ISLAND MARITIME SUPPORT FACILITY

STORM DRAIN PLAN - AREA 8

THE PORT OF LOS ANGELES
ENGINEERING DIVISION
425 S. PALOS VERDES STREET SAN PEDRO CA 90731-3309

DRAWING NUMBER: 1-3513
SHEET NUMBER: SD-09

PDLAPRDY_042023_BW2

MATCHLINE, SEE DRAWING SD-09 FOR CONTINUATION

MATCHLINE, SEE DRAWING SD-12b FOR CONTINUATION

MATCHLINE, SEE DRAWING SD-05 FOR CONTINUATION

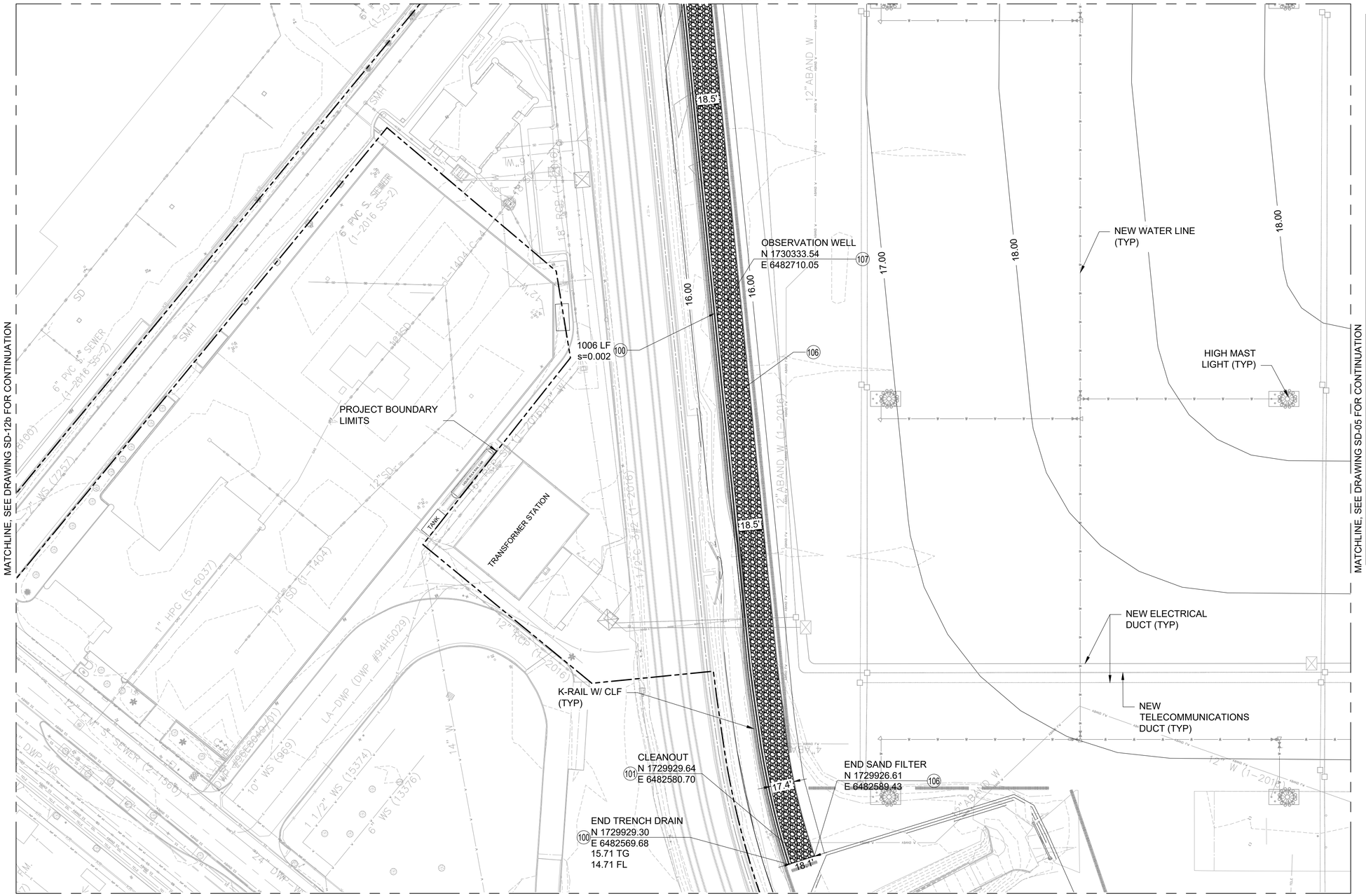

STORM DRAIN CONSTRUCTION NOTES:

LEGEND OF CONSTRUCTION NOTES

EXISTING/PROTECT ◯ CONSTRUCT

No.	CONSTRUCTION ITEM	REFERENCE DWG
78	ALLEY GRATING BASIN (AGB)	
79	REINFORCED CONCRETE PIPE (RCP)	
80	PAVEMENT REMODELING AT CATCH BASIN	
81	CURBSIDE GRATING BASIN (CGB)	
82	JUNCTION STRUCTURE (J.S.)	
83	CORRUGATED STEEL PIPE (CSP)	
84	REINFORCED CONCRETE BOX	
85	STORM DRAIN MANHOLE	LA BOE MH EZ, MH JM, SPPWC 320-2
86	WARPED GUTTER AT CATCH BASIN	
87	CATCH BASIN NO.36	
88	CATCH BASIN NO. 44	
89	CATCH BASIN NO. 47	
90	LOW FLOW INLET STRUCTURE	
91	LOW FLOW OUTLET STRUCTURE	
92	SIDEWALK OUTLET STRUCTURE	
93	SIDEWALK CULVERT WITH STEEL PLATE COVER	
94	SEAL PER DETAIL	
95	REINFORCED CONCRETE PIPE-LINE	
96	SEAL WITH 8" BRICK & MORTAR	
97	CONCRETE COLLAR	
98	MONOLITHIC CONNECTION	
99	SIDE OPENING CATCH BASIN W,V,B	
100	TRENCH DRAIN	
101	DRAIN CLEAN OUT (DCO)	4SD-18
102	FILTER INSERT	OLDCASTLE FLOGARD PLUS
103	HDPE PIPE, SOLID WALL	
104	HDPE PIPE, PERFORATED	
105	CATCH BASIN GRATE AND FRAME	LAHD H-101-01
106	SAND FILTER BMP	1SD-18, 2SD-18
107	OBSERVATION WELL	3SD-18

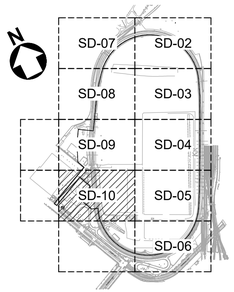

40' 0' 40' 80'

SCALE: 1" = 40'

1SD-10 / SD-10 STORM DRAIN PLAN - AREA 9

SCALE: 1" = 40'

NO.	DATE	DRAWN	REVISIONS -	CHK'D	APP'D
C	7/18/25	-	40% DESIGN		
D	9/19/25	-	80% DESIGN		

NOT FOR CONSTRUCTION

NO.	DATE	DRAWN	REVISIONS -	CHK'D	APP'D

80% DESIGN REVIEW SEP 19 , 2025

Jacobs
2600 MICHELSON DRIVE, SUITE 500
IRVINE, CA 92612
T: (949) 224-7500
F: (949) 224-7501

REGISTERED PROFESSIONAL ENGINEER SHARON CHOI No. C72367 CIVIL STATE OF CALIFORNIA

SCALE:	1"=40'
DRAWN:	H. WITZEMAN
CHECKED:	R. LUONG
DESIGNED:	S. CHOI
	ENGINEER / ARCHITECT

TERMINAL ISLAND MARITIME SUPPORT FACILITY

STORM DRAIN PLAN - AREA 9

THE PORT OF LOS ANGELES
ENGINEERING DIVISION
425 S. PALOS VERDES STREET SAN PEDRO CA 90731-3309

DRAWING NUMBER 1-3513

SHEET NUMBER SD-10

POLAPRO1_042023_BWD

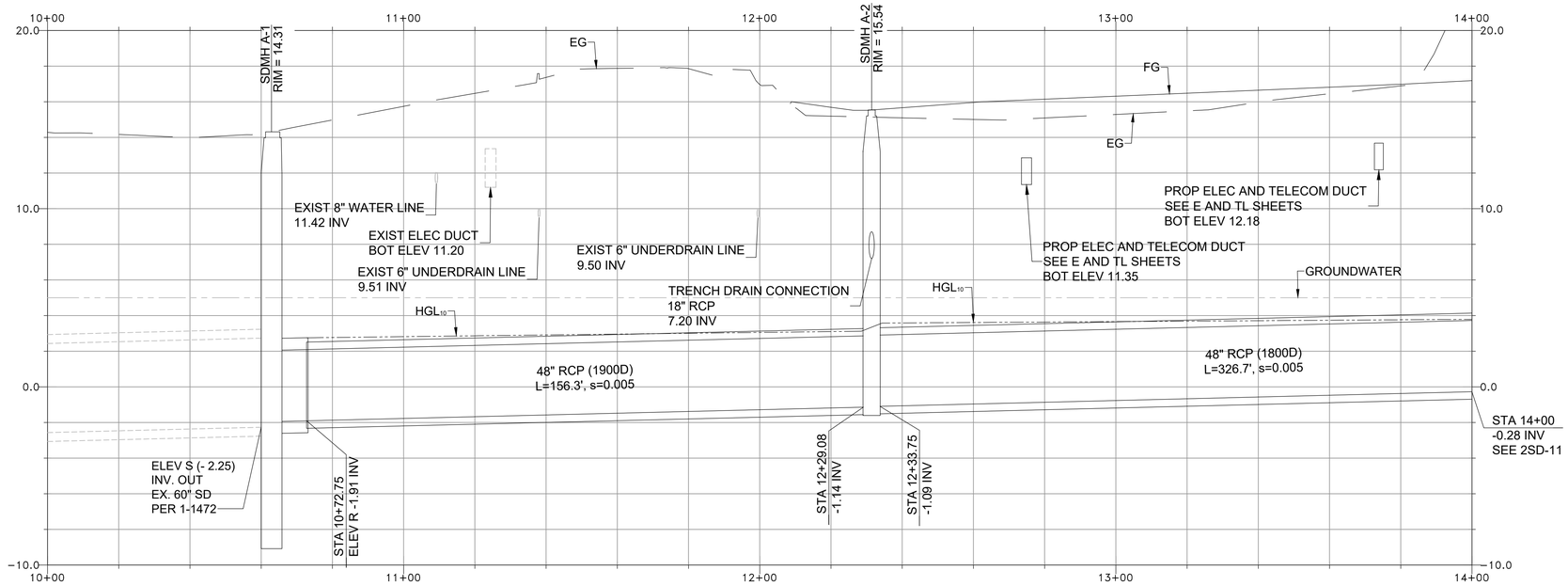

1SD-11
SD-04, 05,09

STORM DRAIN PROFILE- LINE A

HORIZ. SCALE: 1"=20'
VERT. SCALE: 1"=5'

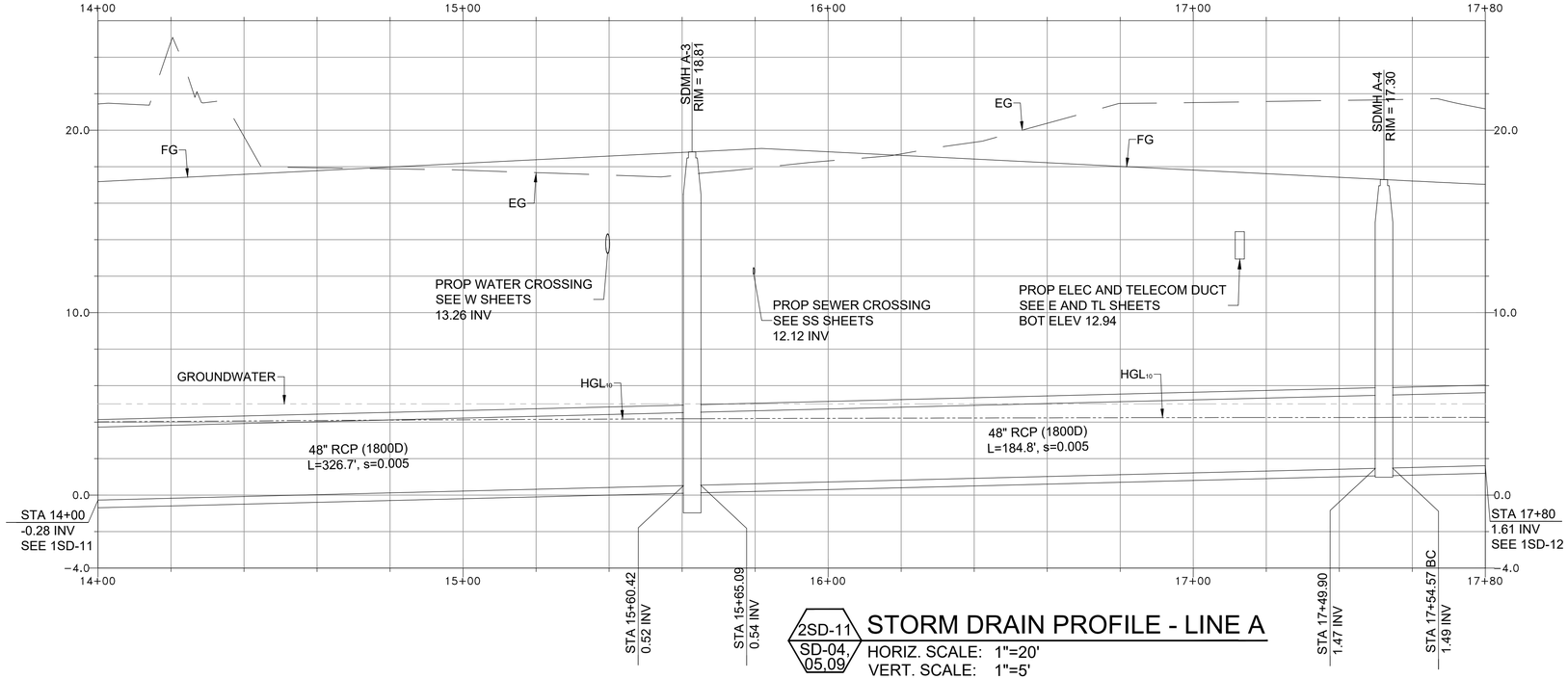

2SD-11
SD-04, 05,09

STORM DRAIN PROFILE - LINE A

HORIZ. SCALE: 1"=20'
VERT. SCALE: 1"=5'

NO.	DATE	DRAWN	REVISIONS -	CHK'D	APP'D
C	7/18/25	-	40% DESIGN		
D	9/19/25	-	80% DESIGN		

NOT FOR CONSTRUCTION

NO.	DATE	DRAWN	REVISIONS -	CHK'D	APP'D

80% DESIGN REVIEW
SEP 19 , 2025

Jacobs
2020 MICHELSON DRIVE, SUITE 600
IRVINE, CA 92612
T: (949) 224-7500
F: (949) 224-7501

REGISTERED PROFESSIONAL ENGINEER
SHARON CHOI
No. C72367
CIVIL
STATE OF CALIFORNIA

SCALE: 1"=20'
DRAWN: M. BICKEL
CHECKED: G.HSU
DESIGNED: S. CHOI
ENGINEER / ARCHITECT

TERMINAL ISLAND MARITIME SUPPORT FACILITY

STORM DRAIN PROFILE - 1

THE PORT OF LOS ANGELES
ENGINEERING DIVISION
425 S. PALOS VERDES STREET SAN PEDRO CA 90731-3309

DRAWING NUMBER: 1-3513
SHEET NUMBER: SD-11

POLAPRDY_042023_BWD

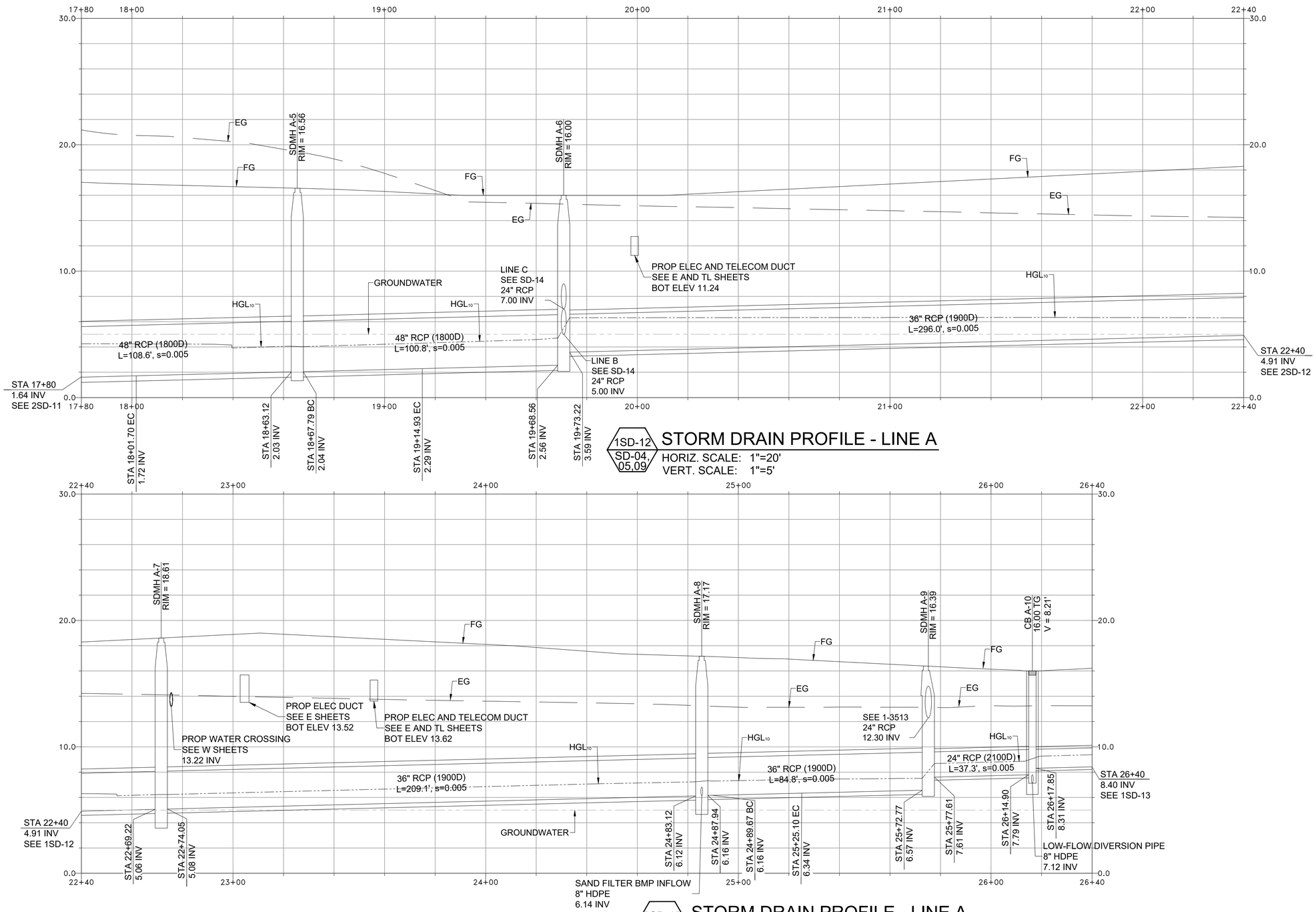

1SD-12 / SD-04, 05,09

STORM DRAIN PROFILE - LINE A

HORIZ. SCALE: 1"=20'
VERT. SCALE: 1"=5'

2SD-12 / SD-04, 05,09

STORM DRAIN PROFILE - LINE A

HORIZ. SCALE: 1"=20'
VERT. SCALE: 1"=5'

NO.	DATE	DRAWN	REVISIONS -	CHK'D	APP'D
C	7/18/25	-	40% DESIGN		
D	9/19/25	-	80% DESIGN		

NOT FOR CONSTRUCTION

NO.	DATE	DRAWN	REVISIONS -	CHK'D	APP'D
			80% DESIGN REVIEW SEP 19 , 2025		

Jacobs
3600 MICHELSON DRIVE, SUITE 500
IRVINE, CA 92612
T: (949) 224-7500
F: (949) 224-7501

REGISTERED PROFESSIONAL ENGINEER
SHARON CHOI
No. C72367
CIVIL
STATE OF CALIFORNIA

SCALE: 1"-20'
DRAWN: M. BICKEL
CHECKED: G. HSU
DESIGNED: S. CHOI
ENGINEER / ARCHITECT

TERMINAL ISLAND MARITIME SUPPORT FACILITY

STORM DRAIN PROFILE - 2

THE PORT OF LOS ANGELES
ENGINEERING DIVISION
425 S. PALOS VERDES STREET SAN PEDRO CA 90731-3309

DRAWING NUMBER: 1-3513
SHEET NUMBER: SD-12

POLAPR01_040223_BWD

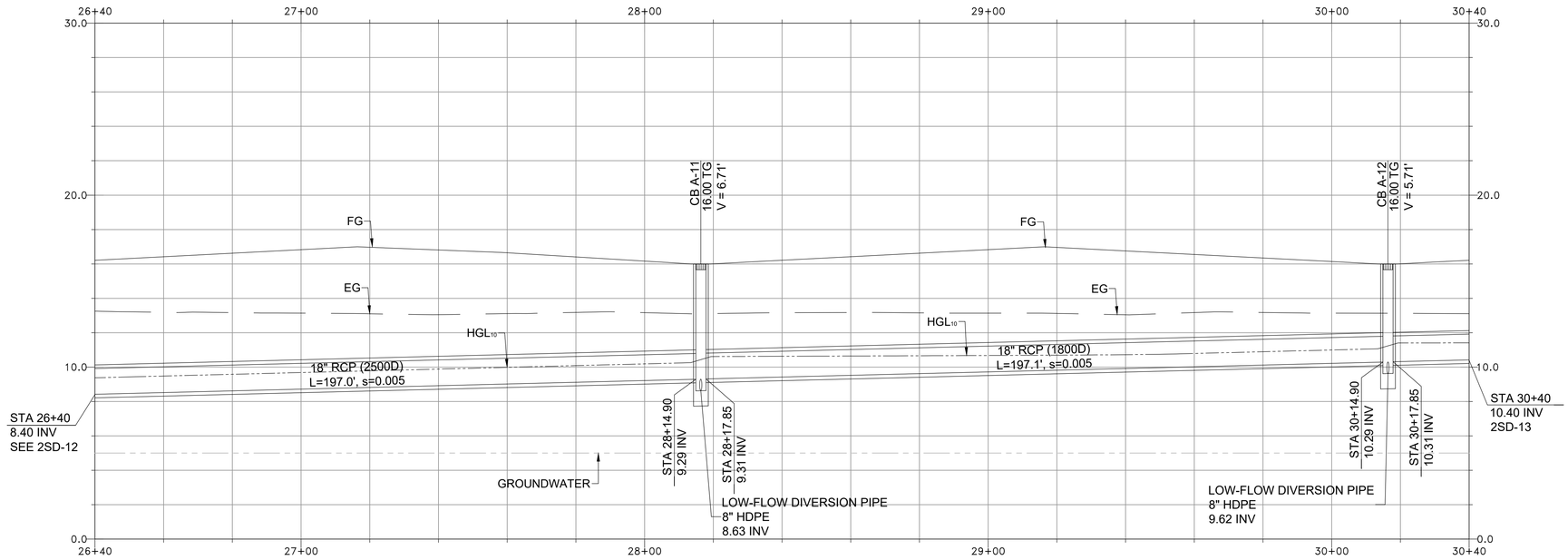

1SD-13
SD-04, 05,09

STORM DRAIN PROFILE - LINE A

HORIZ. SCALE: 1"=20'
VERT. SCALE: 1"=5'

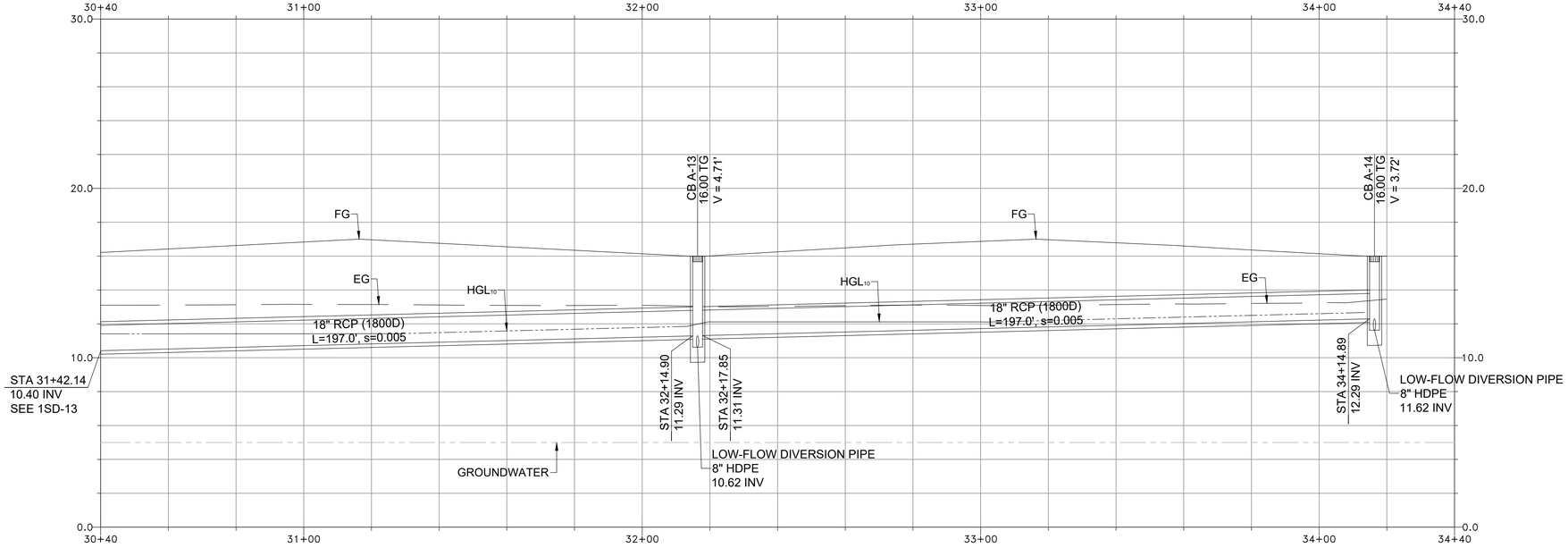

2SD-13
SD-04, 05,09

STORM DRAIN PROFILE - LINE A

HORIZ. SCALE: 1"=20'
VERT. SCALE: 1"=5'

NO.	DATE	DRAWN	REVISIONS -	CHK'D	APP'D
C	7/18/25	-	40% DESIGN		
D	9/19/25	-	80% DESIGN		

NOT FOR CONSTRUCTION

NO.	DATE	DRAWN	REVISIONS -	CHK'D	APP'D
			80% DESIGN REVIEW SEP 19 , 2025		

Jacobs
2050 MICHELSON DRIVE, SUITE 300
IRVINE, CA 92612
T: (949) 224-7500
F: (949) 224-7501

REGISTERED PROFESSIONAL ENGINEER
SHARON CHOI
No. C72367
CIVIL
STATE OF CALIFORNIA

SCALE:	1"=20'
DRAWN:	M. BICKEL
CHECKED:	G. HSU
DESIGNED:	S. CHOI

ENGINEER / ARCHITECT

TERMINAL ISLAND MARITIME SUPPORT FACILITY

STORM DRAIN PROFILE - 3

THE PORT OF LOS ANGELES
ENGINEERING DIVISION
425 S. PALOS VERDES STREET SAN PEDRO CA 90731-3309

DRAWING NUMBER	SHEET NUMBER
1-3513	SD-13

POLAPRO1_042023_BWD

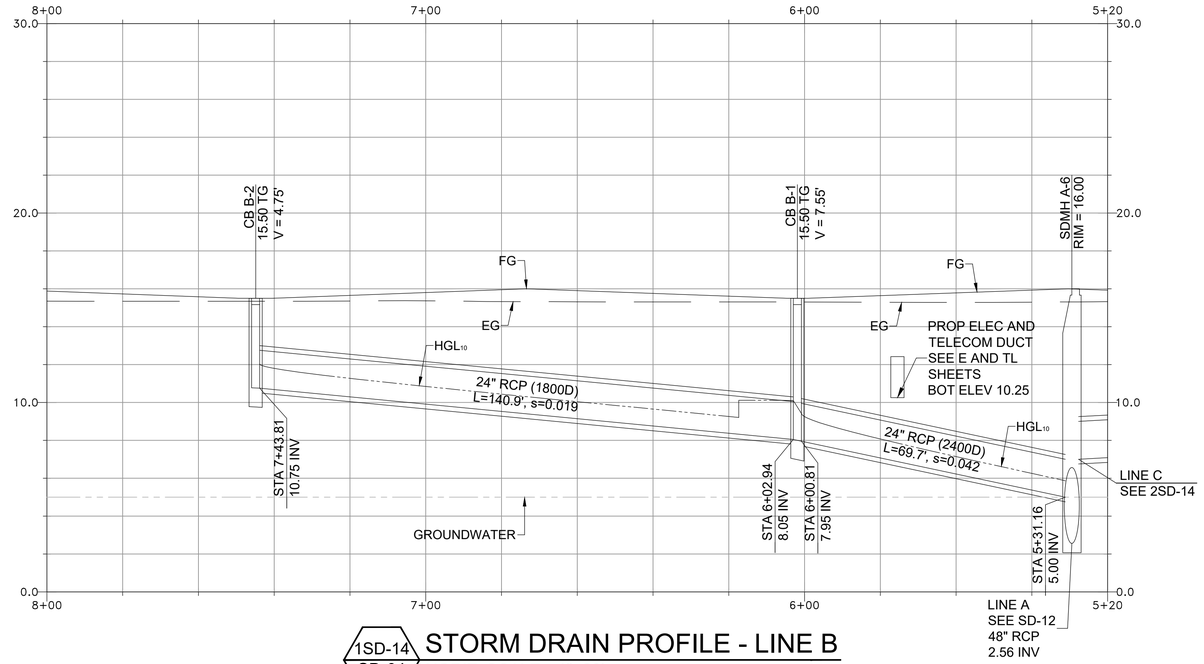

1SD-14 / SD-04

STORM DRAIN PROFILE - LINE B

HORIZ. SCALE: 1"=20'
VERT. SCALE: 1"=5'

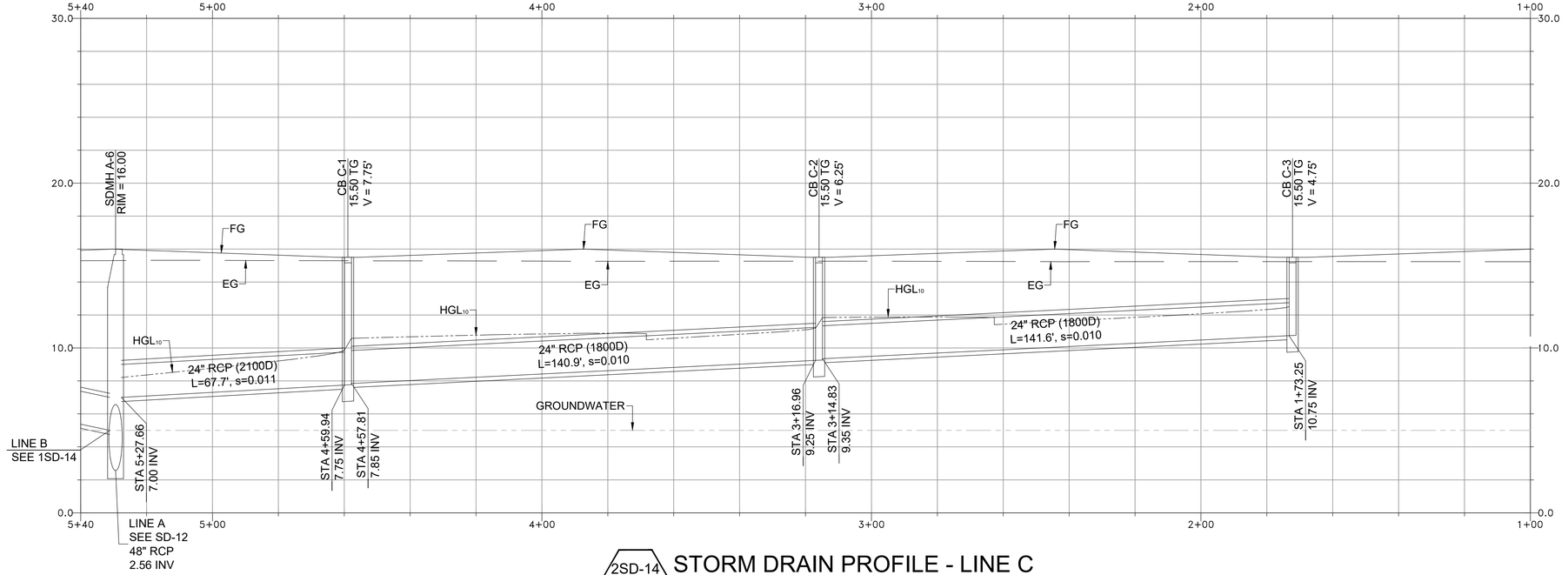

2SD-14 / SD-04

STORM DRAIN PROFILE - LINE C

HORIZ. SCALE: 1"=20'
VERT. SCALE: 1"=5'

NO.	DATE	DRAWN	REVISIONS -	CHK'D	APP'D
C	7/18/25	-	40% DESIGN		
D	9/19/25	-	80% DESIGN		

NOT FOR CONSTRUCTION

80% DESIGN REVIEW
SEP 19 , 2025

Jacobs
2600 MICHELSON DRIVE, SUITE 500
IRVINE, CA 92612
T: (949) 224-7500
F: (949) 224-7501

REGISTERED PROFESSIONAL ENGINEER
SHARON CHOI
No. C72367
CIVIL
STATE OF CALIFORNIA

SCALE:	1"=20'
DRAWN:	M. BICKEL
CHECKED:	G. HSU
DESIGNED:	S. CHOI
	ENGINEER / ARCHITECT

TERMINAL ISLAND MARITIME SUPPORT FACILITY

STORM DRAIN PROFILE - 4

THE PORT OF LOS ANGELES
ENGINEERING DIVISION
425 S. PALOS VERDES STREET SAN PEDRO CA 90731-3309

DRAWING NUMBER: 1-3513
SHEET NUMBER: SD-14

POLAPRO1_04/2023_BWD

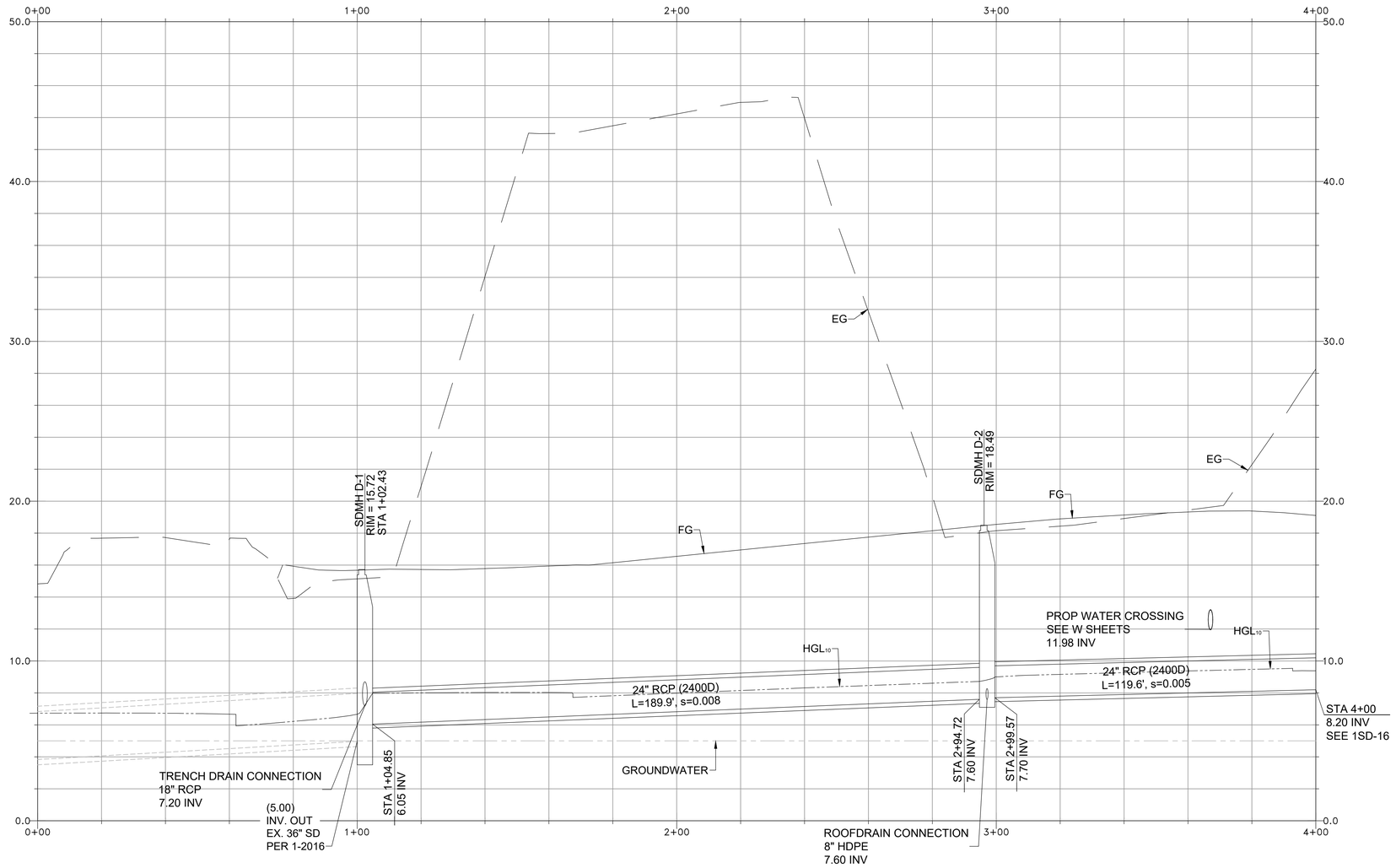

1SD-15
SD-02

STORM DRAIN PROFILE - LINE D

HORIZ. SCALE: 1"=20'
VERT. SCALE: 1"=5'

NO.	DATE	DRAWN	REVISIONS -	CHK'D	APP'D
C	7/18/25	-	40% DESIGN		
D	9/19/25	-	80% DESIGN		

NOT FOR CONSTRUCTION

NO.	DATE	DRAWN	REVISIONS -	CHK'D	APP'D
			80% DESIGN REVIEW SEP 19 , 2025		

Jacobs
2600 MICHELSON DRIVE, SUITE 500
IRVINE, CA 92612
T: (949) 224-7500
F: (949) 224-7501

REGISTERED PROFESSIONAL ENGINEER
SHARON CHOI
No. C72367
CIVIL
STATE OF CALIFORNIA

SCALE: 1"=20'
DRAWN: M. BICKEL
CHECKED: G. HSU
DESIGNED: S. CHOI
ENGINEER / ARCHITECT

TERMINAL ISLAND MARITIME SUPPORT FACILITY

STORM DRAIN PROFILE - 5

THE PORT OF LOS ANGELES
ENGINEERING DIVISION
425 S. PALOS VERDES STREET SAN PEDRO CA 90731-3309

DRAWING NUMBER: 1-3513
SHEET NUMBER: SD-15

POLAPRO1_04/2023_BW3

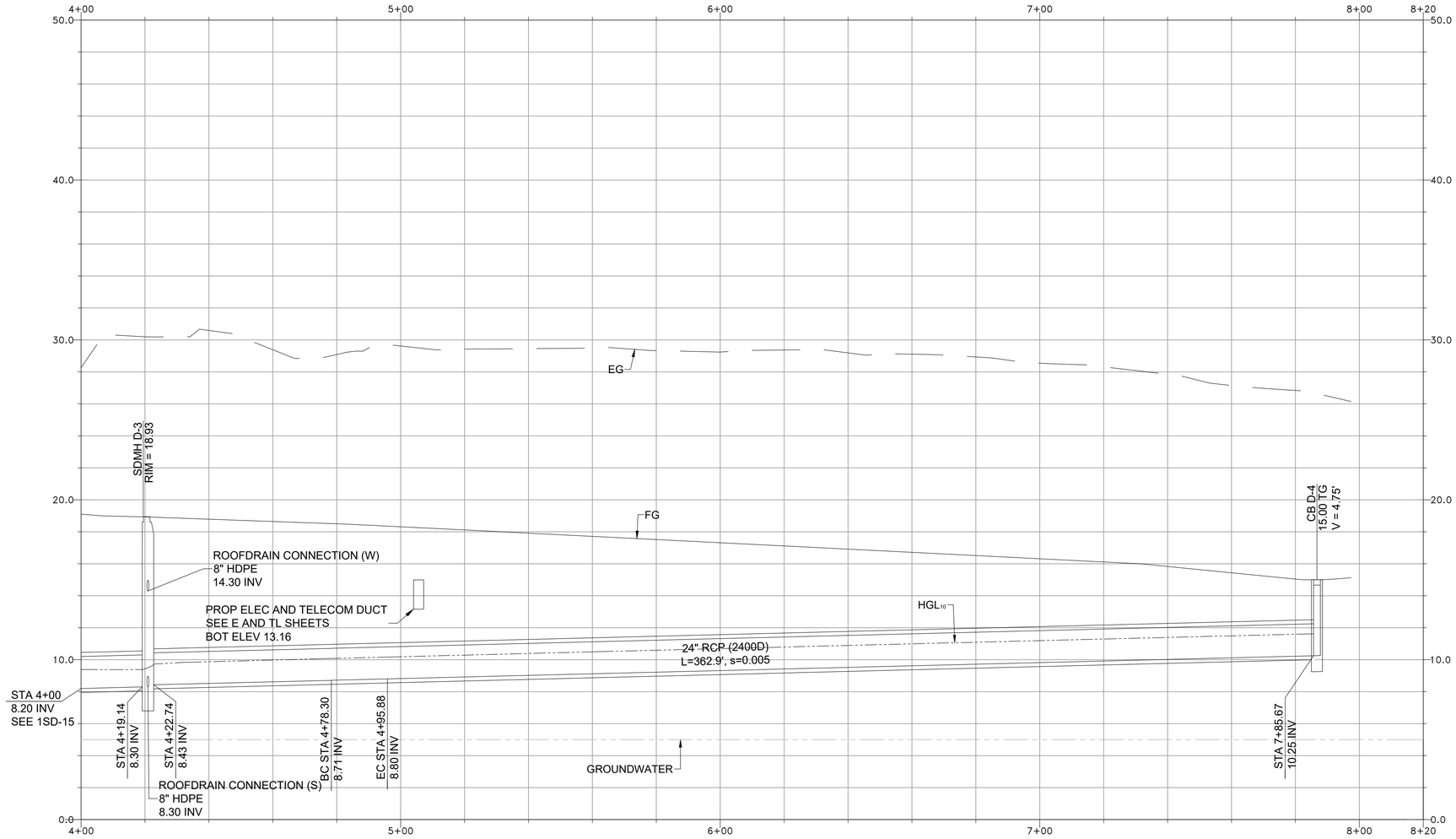

1SD-16 / SD-02

STORM DRAIN PROFILE - LINE D

HORIZ. SCALE: 1"=20'
VERT. SCALE: 1"=5'

NO.	DATE	DRAWN	REVISIONS -	CHK'D	APP'D
C	7/18/25	-	40% DESIGN		
D	9/19/25	-	80% DESIGN		

NOT FOR CONSTRUCTION

NO.	DATE	DRAWN	REVISIONS -	CHK'D	APP'D

80% DESIGN REVIEW
SEP 19 , 2025

Jacobs
2600 MICHELSON DRIVE, SUITE 500
IRVINE, CA 92612
T: (949) 224-7500
F: (949) 224-7501

REGISTERED PROFESSIONAL ENGINEER
SHARON CHOI
No. C72367
CIVIL
STATE OF CALIFORNIA

SCALE: 1"=20'
DRAWN: M. BICKEL
CHECKED: G. HSU
DESIGNED: S. CHOI
ENGINEER / ARCHITECT

TERMINAL ISLAND MARITIME SUPPORT FACILITY

STORM DRAIN PROFILE - 6

THE PORT OF LOS ANGELES
ENGINEERING DIVISION
425 S. PALOS VERDES STREET SAN PEDRO CA 90731-3309

DRAWING NUMBER: 1-3513
SHEET NUMBER: SD-16

POLAPROT_04/2023_BW3

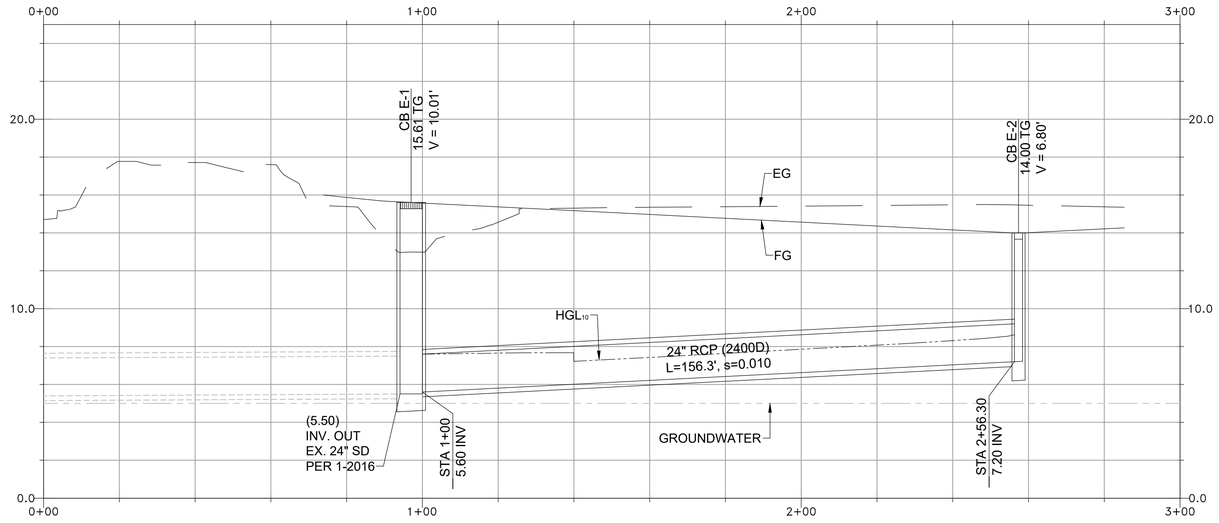

1SD-17 / SD-06

STORM DRAIN PROFILE - LINE E

HORIZ. SCALE: 1"=20'
VERT. SCALE: 1"=5'

NO.	DATE	DRAWN	REVISIONS -	CHK'D	APP'D
C	7/18/25	-	40% DESIGN		
D	9/19/25	-	80% DESIGN		

NOT FOR CONSTRUCTION

80% DESIGN REVIEW
SEP 19 , 2025

Jacobs
2920 MICHELSON DRIVE, SUITE 500
IRVINE, CA 92612
T: (949) 224-7500
F: (949) 224-7501

REGISTERED PROFESSIONAL ENGINEER
SHARON CHOI
No. C72367
CIVIL
STATE OF CALIFORNIA

SCALE: 1"=20'
DRAWN: M. BICKEL
CHECKED: G. HSU
DESIGNED: S. CHOI
ENGINEER / ARCHITECT

TERMINAL ISLAND MARITIME SUPPORT FACILITY

STORM DRAIN PROFILE - 7

THE PORT OF LOS ANGELES
ENGINEERING DIVISION
425 S. PALOS VERDES STREET SAN PEDRO CA 90731-3309

DRAWING NUMBER 1-3513

SHEET NUMBER SD-17

POLAPRDY_04/2023_BW3

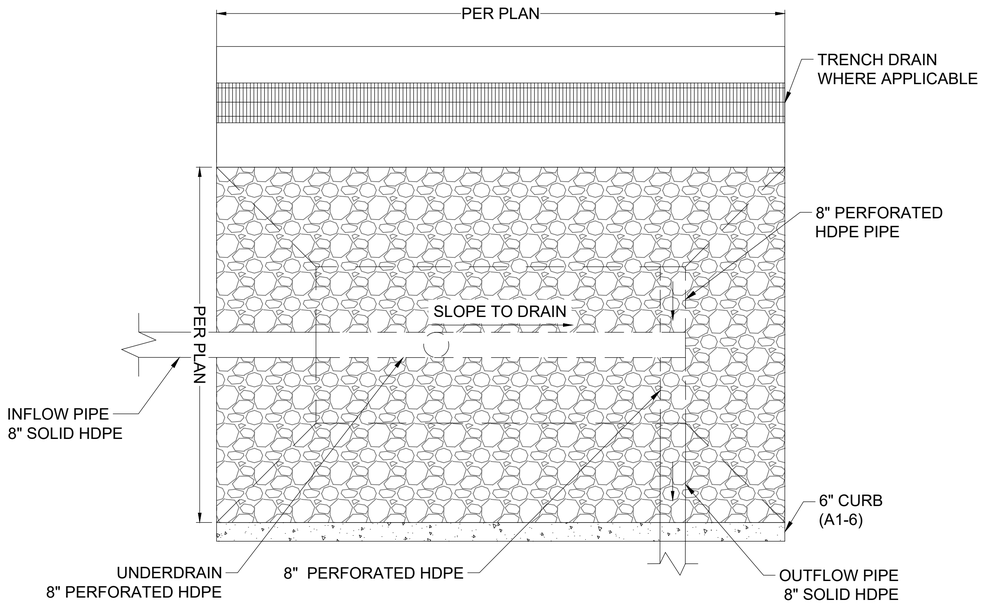

1SD-18 / SD-02 PLAN VIEW - SAND FILTER BMP

SCALE: NTS

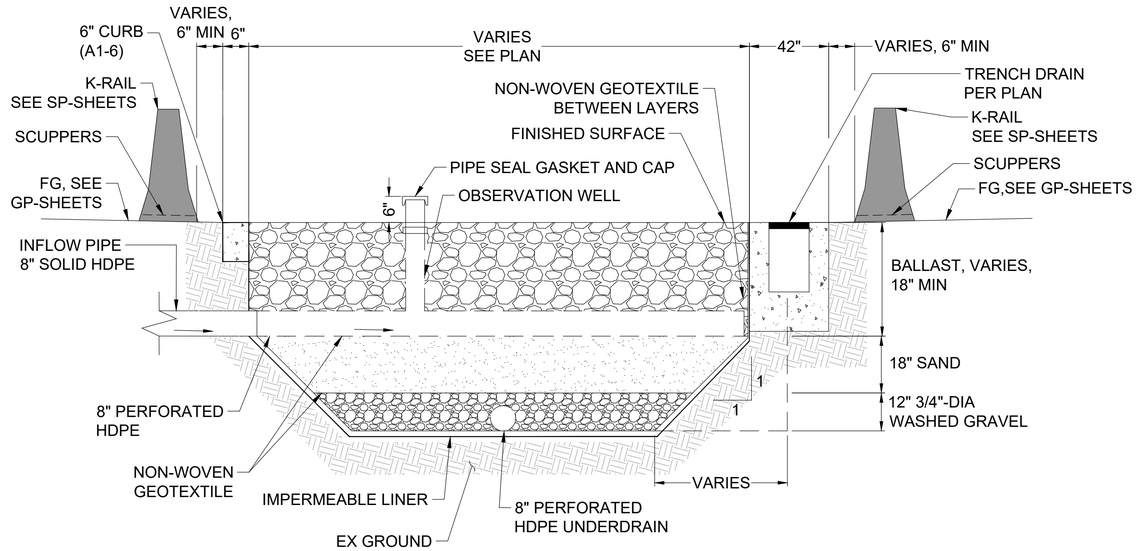

2SD-18 / SD-02 PROFILE VIEW - SAND FILTER BMP

SCALE: NTS

NOTES:
1. SAND SHALL COMPLY WITH ASTM C33 FOR FINE AGGREGATE. GRAIN SIZE FOR SAND SHALL BE IN ACCORDANCE WITH ASTM D 422, STANDARD TEST COMPMETHOD FOR PARTICLE SIZE ANALYSIS OF SOILS OR CALTRANS TEST METHOD C202.
2. FOR BALLAST GRADATION, SEE POLA SPECIFICATION SECTION 34 11 26.13.
3. WASHED GRAVEL SHALL CONFORM TO ASTM #57 STONE SPECIFICATION.
4. NON-WOVEN GEOTEXTILE SHALL BE CALTRANS CLASS 8 RSP FABRIC.
5. IMPERMEABLE LINER SHALL BE POLYETHYLENE GEOMEMBRANE CONFORMING TO CALTRANS SPECIFICATION SECTION 96-1.02R.

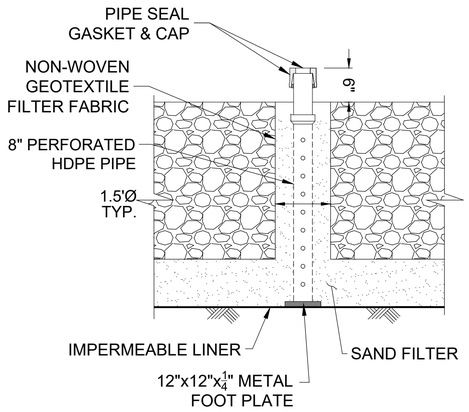

3SD-18 / SD-02 OBSERVATION WELL

SCALE: NTS

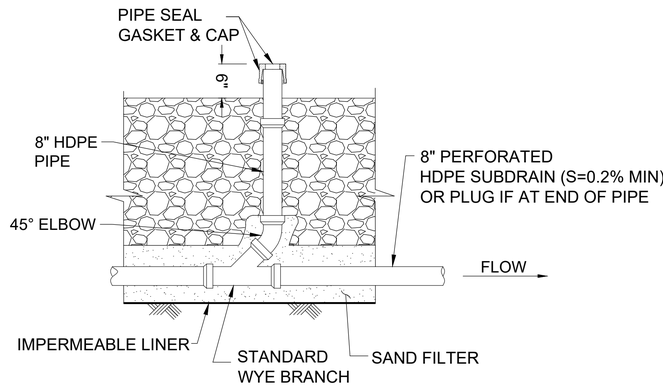

4SD-18 / SD-02 SUBDRAIN CLEANOUT

SCALE: NTS

NO.	DATE	DRAWN	REVISIONS -	CHK'D	APP'D
C	7/18/25	-	40% DESIGN		
D	9/19/25	-	80% DESIGN		

NOT FOR CONSTRUCTION

NO.	DATE	DRAWN	REVISIONS -	CHK'D	APP'D

80% DESIGN REVIEW
SEP 19 , 2025

Jacobs
2900 MICHELSON DRIVE, SUITE 500
IRVINE, CA 92612
T: (949) 224-7500
F: (949) 224-7501

REGISTERED PROFESSIONAL ENGINEER
SHARON CHOI
No. C72367
CIVIL
STATE OF CALIFORNIA

SCALE: AS SHOWN
DRAWN: H. WITZEMAN
CHECKED: R. LUONG
DESIGNED: S. CHOI
ENGINEER / ARCHITECT

TERMINAL ISLAND MARITIME SUPPORT FACILITY

STORM DRAIN DETAILS

THE PORT OF LOS ANGELES
ENGINEERING DIVISION
425 S. PALOS VERDES STREET SAN PEDRO CA 90731-3309

DRAWING NUMBER: 1-3513
SHEET NUMBER: SD-18

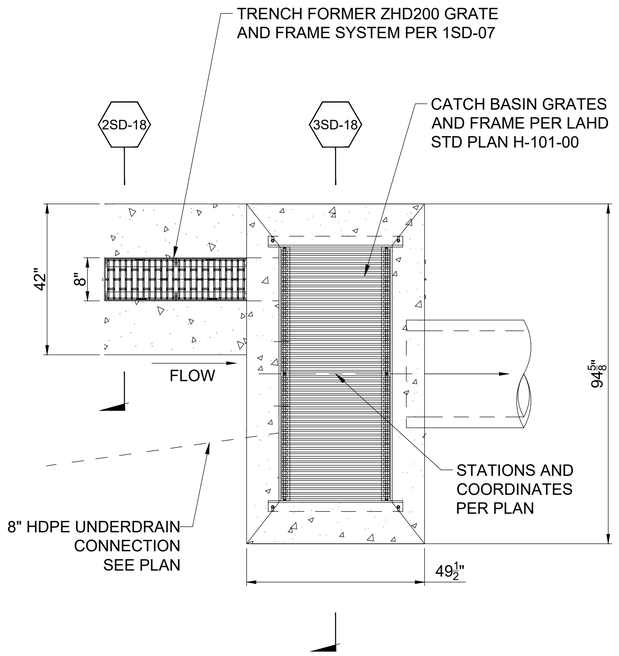

1SD-19 / SD-02 CATCH BASIN WITH TRENCH DRAIN
SCALE: NTS

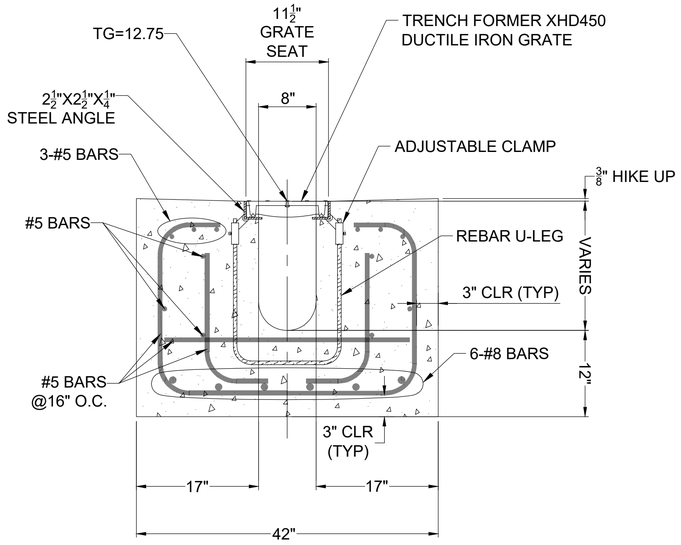

NOTES:
1. MINIMUM COMPRESSIVE STRENGTH AT 28 DAYS SHALL BE 3,000 PSI.
2. BEDDING SHALL BE 12" OF CMB IF TD IS NOT CONSTRUCTED ON TOP OF INFILTRATION TRENCH.
3. CONSTRUCT ISOLATION JOINT ALONG ALL EDGES OF TRENCH DRAIN AND CATCH BASIN PER 6GP-06.

2SD-19 / SD-02 8" WIDE TRENCH DRAIN SECTION
SCALE: NTS

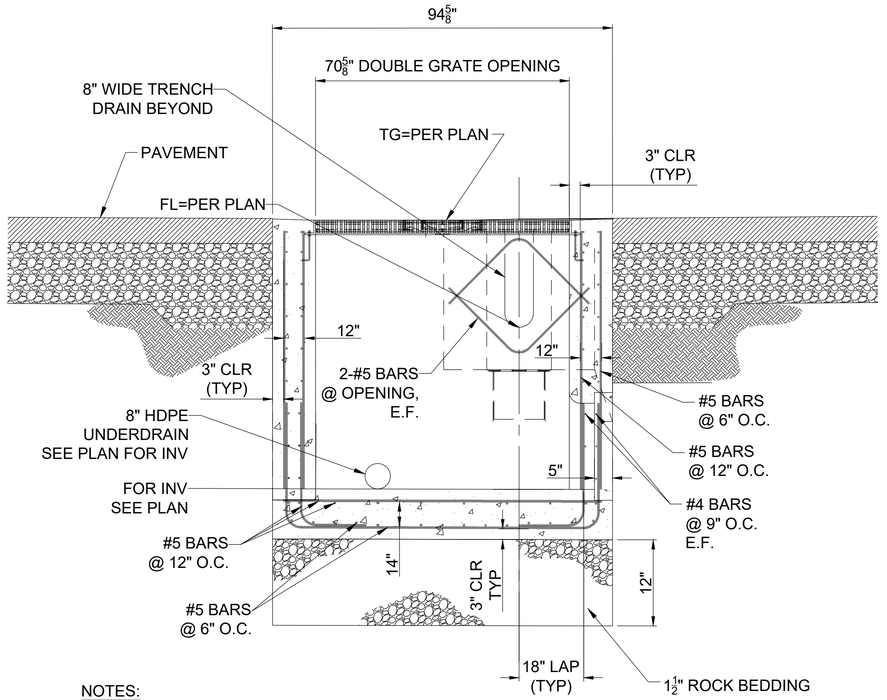

NOTES:
1. PIPE BEDDING OMITTED FOR CLARITY.

3SD-19 / SD-02 CATCH BASIN LONGITUDINAL SECTION
SCALE: NTS

NO.	DATE	DRAWN	REVISIONS -	CHK'D	APP'D
C	7/18/25	-	40% DESIGN		
D	9/19/25	-	80% DESIGN		

NOT FOR CONSTRUCTION

NO.	DATE	DRAWN	REVISIONS -	CHK'D	APP'D

80% DESIGN REVIEW
SEP 19 , 2025

Jacobs
2600 MICHELSON DRIVE, SUITE 500
IRVINE, CA 92612
T: (949) 224-7500
F: (949) 224-7501

REGISTERED PROFESSIONAL ENGINEER
SHARON CHOI
No. C72367
CIVIL
STATE OF CALIFORNIA

SCALE: 1"=40'
DRAWN: H. WITZEMAN
CHECKED: R. LUONG
DESIGNED: S. CHOI
ENGINEER / ARCHITECT

TERMINAL ISLAND MARTIME SUPPORT FACILITY
STORM DRAIN DETAILS

THE PORT OF LOS ANGELES
ENGINEERING DIVISION
425 S. PALOS VERDES STREET SAN PEDRO CA 90731-3309

DRAWING NUMBER 1-3513
SHEET NUMBER SD-19

POLAPRO1_04/2023_BWD

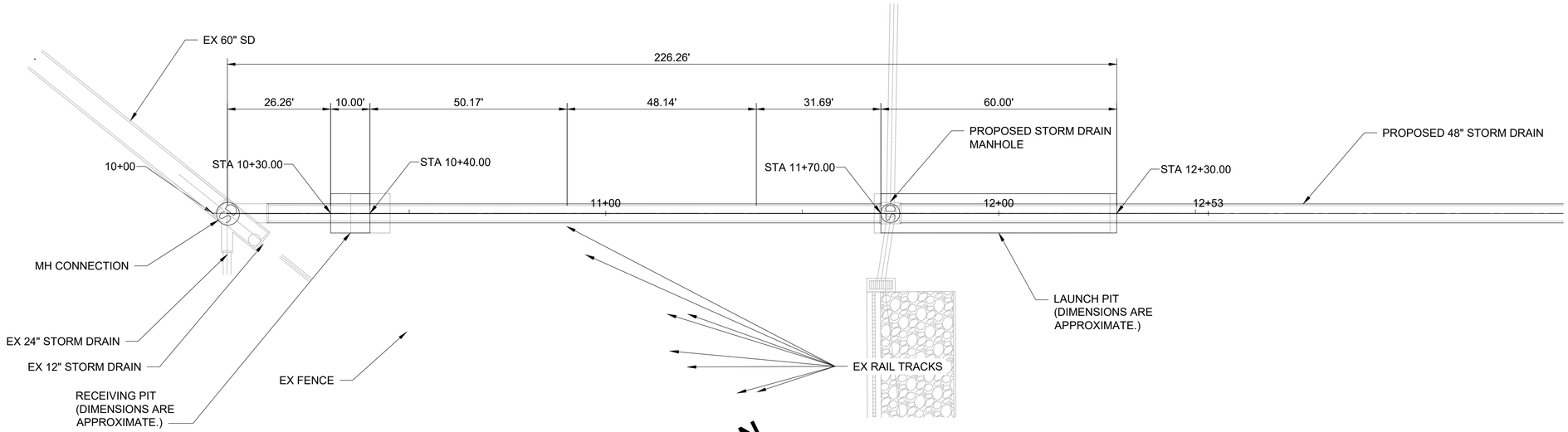

1SD-20
SD-20

PLAN VIEW

SCALE: 1" = 16'

NOTES

1. LAUNCHING AND RECEIVING PIT DIMENSIONS SHOWN ARE INDICATIVE ONLY

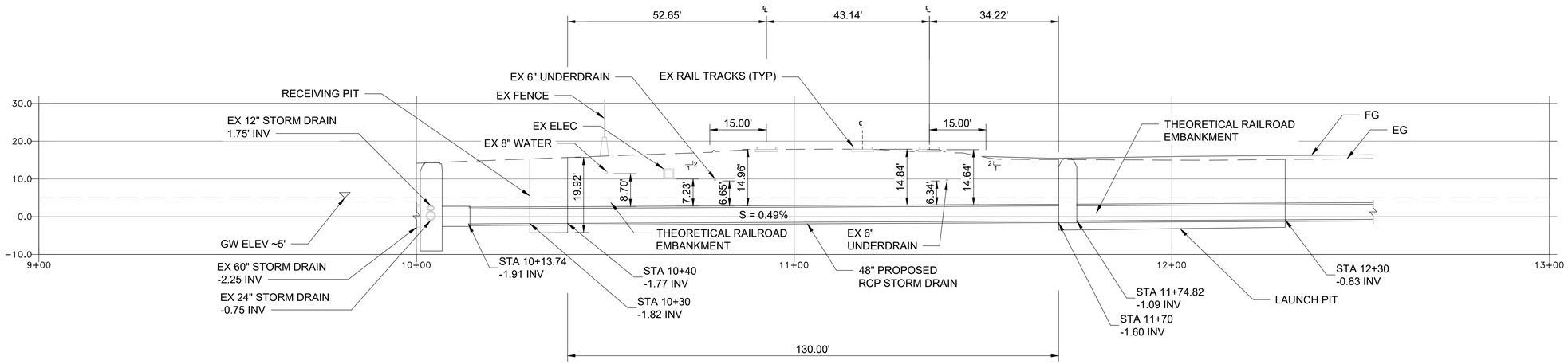

2SD-20
SD-20

PROFILE VIEW

SCALE: 1" = 16' H
1" = 16" V

NO.	DATE	DRAWN	REVISIONS -	CHK'D	APP'D
D	9/19/25	-	80% DESIGN		

NOT FOR CONSTRUCTION

NO.	DATE	DRAWN	REVISIONS -	CHK'D	APP'D
			80% DESIGN REVIEW SEP 19 , 2025		

Jacobs
2600 MICHELSON DRIVE, SUITE 500
IRVINE, CA 92612
T: (949) 224-7500
F: (949) 224-7501

REGISTERED PROFESSIONAL ENGINEER
SHARON CHOI
No. C72367
CIVIL
STATE OF CALIFORNIA

SCALE: 1"=16'
DRAWN: B. ACKERMANN
CHECKED: R. LUONG
DESIGNED: S. CHOI
ENGINEER / ARCHITECT

TERMINAL ISLAND MARITIME SUPPORT FACILITY

SD DETAILS - TRENCHLESS CROSSING

THE PORT OF LOS ANGELES
ENGINEERING DIVISION
425 S. PALOS VERDES STREET SAN PEDRO CA 90731-3309

DRAWING NUMBER: 1-3513
SHEET NUMBER: SD-20

POLAPRD1_040223_BWD

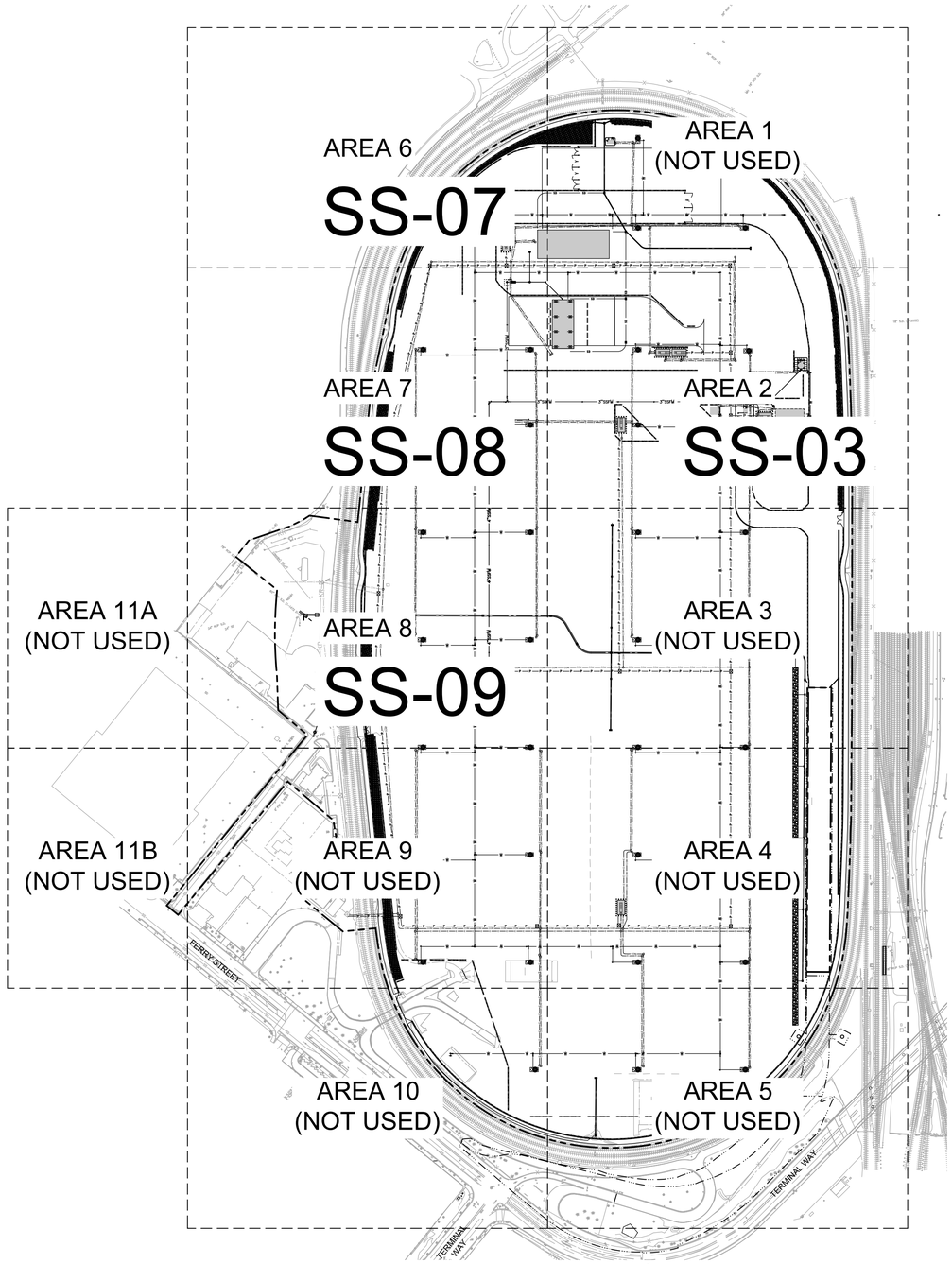

1SS-01 / SS-01 SEWER KEY PLAN
SCALE: 1" = 200'

GENERAL SEWER PLAN NOTES:

1. NEITHER THE OWNER, NOR ENGINEER OF WORK WILL ENFORCE SAFETY MEASURES OR REGULATIONS. CONTRACTOR SHALL DESIGN, CONSTRUCT, MAINTAIN AND INSPECT DAILY ALL SAFETY DEVICES, INCLUDING SHORING AND PROTECTION OF ANY ADJACENT PROPERTY, STRUCTURES, STREETS OR UTILITIES AND SHALL BE SOLELY RESPONSIBLE FOR CONFORMING TO ALL LOCAL, STATE AND FEDERAL SAFETY HEALTH STANDARDS, LAWS AND REGULATIONS.
2. CONTRACTOR SHALL PROTECT IN PLACE ALL UTILITIES. LOCATIONS OF EXISTING UTILITIES AND SUBSTRUCTURES SHOWN ON THE DRAWINGS ARE APPROXIMATE ONLY. CONTRACTOR SHALL VERIFY EXACT LOCATIONS, ELEVATIONS AND DIMENSIONS IN THE FIELD PRIOR TO CONSTRUCTION IN THE AREA OF THE SPECIFIC SUBSTRUCTURE.
3. CONTRACTOR SHALL VERIFY ALL DIMENSIONS, ELEVATIONS, DEPTHS AND SITE CONDITIONS BEFORE STARTING WORK AND NOTIFY ENGINEER IMMEDIATELY OF ANY DISCREPANCIES.
4. CONTRACTOR SHALL MAINTAIN ONE COMPLETE SET OF PRINTS OF ALL CONSTRUCTION DRAWINGS WHICH FORM A PART OF THE CONTRACT. ALL DEVIATIONS FROM THE ORIGINAL DESIGN SHALL BE PRE-APPROVED BY THE ENGINEER AND SHALL BE INDICATED BY ADDITIONAL SKETCHES OR INK ON THE AS-BUILT DRAWINGS. CONTRACTOR SHALL DELIVER TO ENGINEER UPON COMPLETION OF THE JOB, ONE SET OF AS-BUILT DRAWINGS.
5. CONTRACTOR SHALL PROVIDE SUITABLE FACILITIES FOR ACCESS AND OBSERVATION TO THE PROJECT SITE AT ALL TIMES DURING PROJECT CONSTRUCTION DURATION. ACCESS SHALL BE FOR THE PORT OF LOS ANGELES REPRESENTATIVES, PERMIT AGENCIES, AND STATE AND LOCAL AGENCIES.
6. THE WALL AND FACE OF ALL EXCAVATIONS FIVE (5) FEET OR GREATER IN DEPTH SHALL BE EFFECTIVELY GUARDED BY A SHORING SYSTEM. TRENCHES OR EXCAVATIONS LESS THAN FIVE (5) FEET IN DEPTH SHALL ALSO BE GUARDED WHEN EXAMINATION INDICATES THAT HAZARDOUS GROUND MOVEMENT MAY BE EXPECTED.
7. PERFORM ALL WORK IN ACCORDANCE WITH LOCAL, STATE, AND FEDERAL STORMWATER POLLUTION PREVENTION LAWS, AND ANY SPECIAL REQUIREMENTS OF THE CALIFORNIA REGIONAL WATER QUALITY CONTROL BOARD, SANTA ANA REGION.
8. CONTRACTOR SHALL BE RESPONSIBLE FOR PROVIDING A SHORING SYSTEM. THE WALLS AND FACE OF ALL FIVE (5) FEET OR GREATER IN DEPTH SHALL BE EFFECTIVELY GUARDED BY A SHORING SYSTEM, SLOPING OF THE GROUND, OR OTHER EQUIVALENT MEANS. TRENCHES OR EXCAVATIONS LESS THAN FIVE (5) FEET IN DEPTH SHALL ALSO BE GUARDED WHEN EXAMINATION BY A COMPETENT PERSON INDICATES THAT HAZARDOUS GROUND MOVEMENT MAY BE EXPECTED. CONTRACTOR SHALL OBTAIN A PERMIT TO PERFORM EXCAVATION OR TRENCH WORK AS DESCRIBED FROM CAL-OSHA. CONTRACTOR SHALL SUBMIT ITS COMPETENT PERSON TO THE OWNER AND THE COMPETENT PERSON SHALL BE ON PROJECT SITE AT ALL TIMES WHERE UNDERGROUND WORK IS TAKING PLACE THAT REQUIRES PERSONNEL TO ENTER AN EXCAVATION.
9. THE EXISTENCE AND LOCATION OF ANY UNDERGROUND UTILITY PIPES OR STRUCTURES SHOWN ON THESE PLANS ARE OBTAINED BY A SEARCH OF AVAILABLE RECORDS AND DOES NOT CONSTITUTE A REPRESENTATION AS TO THE ACCURACY OR COMPLETENESS OF THE LOCATION OR THE EXISTENCE OR NON-EXISTENCE OF ANY UNDERGROUND UTILITY PIPES OR STRUCTURES WITHIN THE LIMITS OF THIS PROJECT. THE CONTRACTOR SHALL TAKE ALL DUE PRECAUTIONARY MEANS TO PROTECT THE UTILITY LINES NOT OF RECORD OR NOT SHOWN ON THESE PLANS AS WELL AS THOSE SHOWN ON THE DRAWINGS.
10. CONTRACTOR SHALL COMPLY WITH ALL CONDITIONS OR REQUIREMENTS OF PERMITS APPLICABLE TO THIS PROJECT.
11. ALL MATERIAL, EQUIPMENT, AND CONSTRUCTION WILL BE SUBJECT TO CONTINUOUS INSPECTION BY THE OWNER'S REPRESENTATIVE.
12. NO PIPING FOR SEWER SHALL BE INSTALLED PRIOR TO PLAN CHECK APPROVAL AND PRELIMINARY INSPECTION.
13. UPON COMPLETION OF CONSTRUCTION, NO EXCAVATION OR OPEN TRENCH MAY BE BACKFILLED WITHOUT FIRST SECURING THE INSPECTOR APPROVAL. ANY AREAS BACKFILLED WITHOUT PRIOR APPROVAL WILL BE REQUIRED TO BE EXPOSED AND CORRECTED AS NECESSARY.
14. THERE SHALL BE NO INTERCONNECTION BETWEEN A POTABLE WATER SYSTEM AND A WASTE WATER SYSTEM WITHIN THE PROJECT LIMITS.
15. ALL WORK SHALL BE IN ACCORDANCE WITH THE APPLICABLE SECTION OF THE LATEST EDITION OF THE STANDARD SPECIFICATIONS FOR PUBLIC WORKS CONSTRUCTION AND SUPPLEMENTS THEREOF.
16. ALL SEWER LINE CONSTRUCTION SHALL BE DR14 PVC SEWER PIPE UNLESS SPECIFIED OTHERWISE IN THESE PLANS. ALL BUILDING CONNECTIONS SHALL BE MINIMUM 6" DIAMETER DR14 PVC SEWER PIPE. IF EXISTING LATERAL IS 4" DIAMETER, INSTALL 6"X4" REDUCER.
17. CONTRACTOR SHALL REPAIR AND REPLACE DAMAGED EXISTING IMPROVEMENTS AND FACILITIES PER SECTION 7-9 OF THE SSPWC.
18. ALL EXISTING PUBLIC WATER FACILITIES SHALL BE PROTECTED IN PLACE. CONTRACTOR PERFORMING THIS WORK SHALL BE RESPONSIBLE FOR ALL COSTS AS A RESULT OF ANY DAMAGE OR REPAIRS TO EXISTING WATER FACILITIES.
19. CONTRACTOR SHALL COMPLY WITH ALL FEDERAL, STATE, LOCAL AND CAL-OSHA SAFETY REGULATIONS. THE CONTRACTOR'S PERSONNEL SHALL BE CERTIFIED FOR CONFINED SPACE ENTRY.
20. CONTRACTOR SHALL BE RESPONSIBLE FOR REMOVAL AND DISPOSAL OF ANY DEBRIS RESULTING FROM CORE DRILLING INTO EXISTING SUBSTRUCTURES. CONTRACTOR SHALL COMPLY WITH ALL FEDERAL, STATE AND LOCAL REGULATIONS REGARDING DISPOSAL OF DEBRIS.
21. CONTRACTOR SHALL TAKE ALL MEASURES REQUIRED TO MAINTAIN LOW LEVELS IN THE WET WELL WHEN CORE DRILLING NEW PIPE. IF REQUIRED, CONTRACTOR SHALL PUMP SEWAGE FROM THE WET WELL WITH THE USE OF AN AGENCY APPROVED VACUUM PUMP TRUCK.
22. IF REQUIRED, CONTRACTOR SHALL BE RESPONSIBLE FOR DEWATERING OF THE EXCAVATION, DISPOSAL OF WATER, AND FOR MEETING ALL REQUIRED LAWS AND CODES. ALL DEWATERING SHALL BE DONE IN ACCORDANCE WITH RWQCB ORDER AND PROJECT PERMITS.
23. ALL REFERENCES TO STANDARD PLANS ARE TO THE CITY OF LOS ANGELES STANDARD PLAN DRAWINGS.

LEGEND OF CONSTRUCTION NOTES

COORDINATE	
CONSTRUCT	REMODEL EXISTING
EXISTING	REMOVE AND CONSTRUCT
REMOVE	RELOCATE
NOT IN CONTRACT	ABANDON

200' 0' 200' 400'
SCALE: 1" = 200'

NO.	DATE	DRAWN	REVISIONS -	CHK'D	APP'D
C	7/18/25	-	40% DESIGN		
D	9/19/25	-	80% DESIGN		

NOT FOR CONSTRUCTION

NO.	DATE	DRAWN	REVISIONS -	CHK'D	APP'D

80% DESIGN REVIEW
SEP 19 , 2025

Jacobs
2900 MICHELSON DRIVE, SUITE 500
IRVINE, CA 92612
T: (949) 224-7500
F: (949) 224-7501

REGISTERED PROFESSIONAL ENGINEER
MICHAEL S. MCAMIS
No. 60573
CIVIL
STATE OF CALIFORNIA

SCALE: 1"=200'
DRAWN: E. FLORES
CHECKED: G. NGUYEN
DESIGNED: S. MCAMIS
ENGINEER / ARCHITECT

TERMINAL ISLAND MARITIME SUPPORT FACILITY

SEWER KEY PLAN AND NOTES

THE PORT OF LOS ANGELES
ENGINEERING DIVISION
425 S. PALOS VERDES STREET SAN PEDRO CA 90731-3309

DRAWING NUMBER: 1-3513
SHEET NUMBER: SS-01

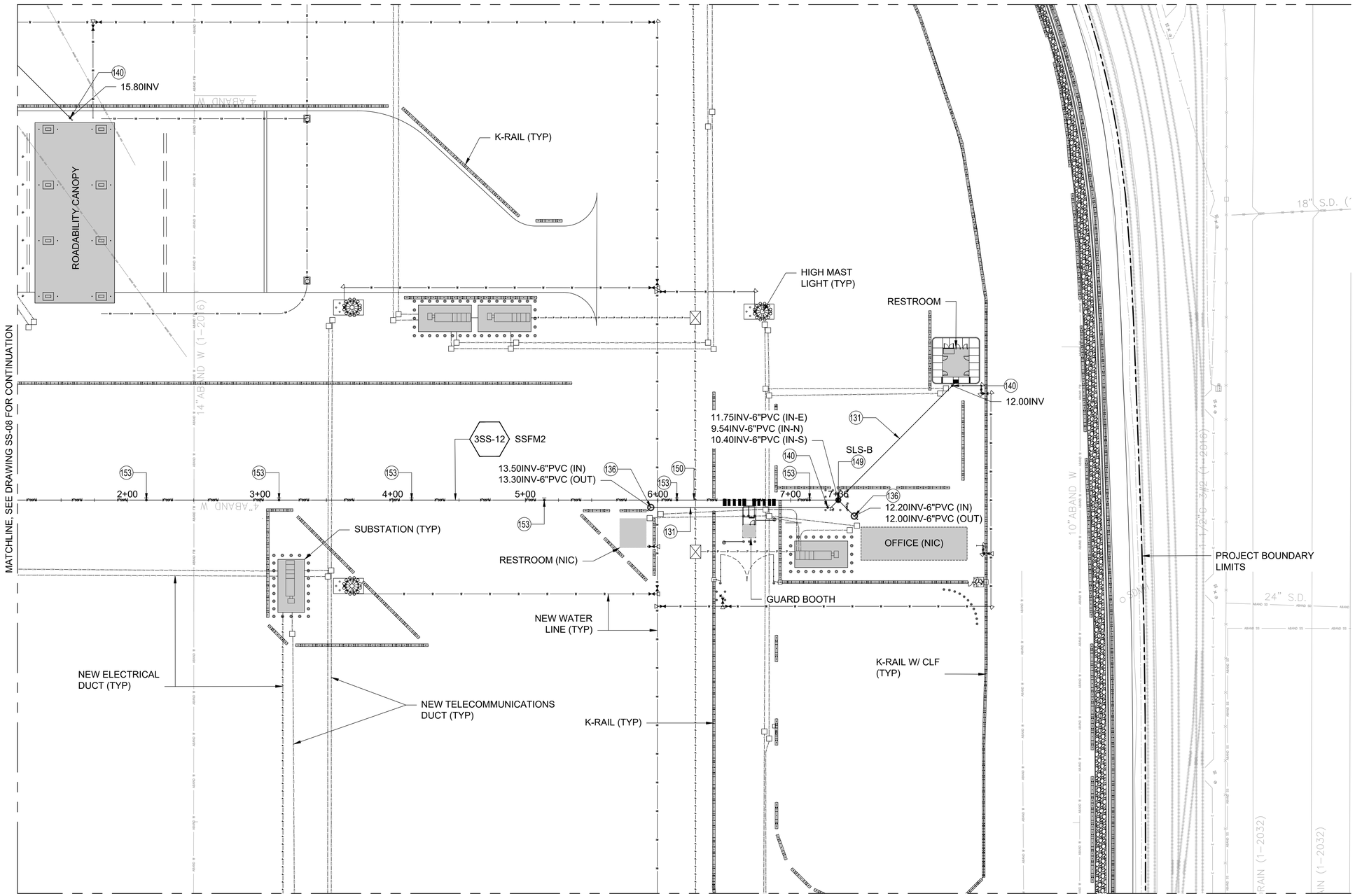

2SS-01 / SS-03 SEWER PLAN - AREA 2
SCALE: 1" = 40'

SEWER CONSTRUCTION NOTES:

LEGEND OF CONSTRUCTION NOTES

EXISTING/PROTECT ◯ CONSTRUCT

No.	CONSTRUCTION ITEM	REFERENCE DWG
131	PVC SEWER PIPE; 6"d, s=0.02 (UNO)	
136	SEWER MANHOLE	LADPW STD PL 1-140-0
140	SEWER CLEANOUT STRUCTURE (SCO)	LADPW STD PL 1-164-0
144	JACK AND BORE	
147	3" SWING CHECK VALVE	
148	OIL WATER SEPARATOR; 5,000 GAL	1SS-19
149	SEWER LIFT STATION	1SS-17, 3SS-17, 1SS-18
150	SEWER FORCE MAIN (SSFM) C900 PVC; LESS THAN 4" USE SCH 80 PVC	
151	THRUST BLOCK	
152	REDUCER	
153	FORCE MAIN CLEAN SEWER CLEANOUT STRUCTURE (SCO)	3SS-18
154	SWING CHECK VALVE VAULT	5SS-18

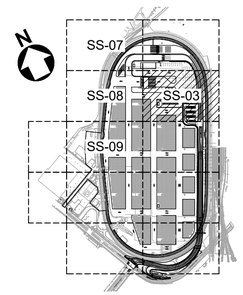

KEY MAP

40' 0' 40' 80'
SCALE: 1" = 40'

NO.	DATE	DRAWN	REVISIONS -	CHK'D	APP'D
C	7/18/25	-	40% DESIGN		
D	9/19/25	-	80% DESIGN		

NOT FOR CONSTRUCTION

NO.	DATE	DRAWN	REVISIONS -	CHK'D	APP'D
			80% DESIGN REVIEW SEP 19 , 2025		

Jacobs
2001 MICHELSON DRIVE, SUITE 650
IRVINE, CA 92612
T: (949) 224-7500
F: (949) 224-7501

REGISTERED PROFESSIONAL ENGINEER
MICHAEL S. MCAMIS
No. 60573
CIVIL
STATE OF CALIFORNIA

SCALE:	1"=40'
DRAWN:	E. FLORES
CHECKED:	G. NGUYEN
DESIGNED:	S. MCAMIS
	ENGINEER / ARCHITECT

TERMINAL ISLAND MARITIME SUPPORT FACILITY

SEWER PLAN - AREA 2

THE PORT OF LOS ANGELES
ENGINEERING DIVISION
425 S. PALOS VERDES STREET SAN PEDRO CA 90731-3309

DRAWING NUMBER 1-3513

SHEET NUMBER SS-03

POLAPRO1_04/2023_BWD

SEWER CONSTRUCTION NOTES:

LEGEND OF CONSTRUCTION NOTES		
EXISTING/PROTECT ◯ CONSTRUCT		
No.	CONSTRUCTION ITEM	REFERENCE DWG
131	PVC SEWER PIPE; 6"d, s=0.02 (UNO)	
136	SEWER MANHOLE	LADPW STD PL 1-140-0
140	SEWER CLEANOUT STRUCTURE (SCO)	LADPW STD PL 1-164-0
144	JACK AND BORE	
147	3" SWING CHECK VALVE	
148	OIL WATER SEPARATOR; 5,000 GAL	1SS-19
149	SEWER LIFT STATION	1SS-17, 3SS-17, 1SS-18
150	SEWER FORCE MAIN (SSFM) C900 PVC; LESS THAN 4" USE SCH 80 PVC	
151	THRUST BLOCK	
152	REDUCER	
153	FORCE MAIN CLEAN SEWER CLEANOUT STRUCTURE (SCO)	3SS-18
154	SWING CHECK VALVE VAULT	5SS-18



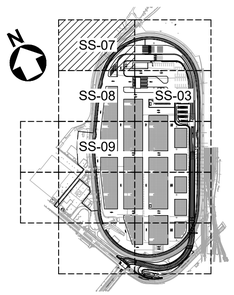

KEY MAP

40' 0' 40' 80'

SCALE: 1" = 40'

6SS-01 / SS-07

SEWER PLAN - AREA 6

SCALE: 1" = 40'

N

NO.	DATE	DRAWN	REVISIONS -	CHK'D	APP'D
C	7/18/25	-	40% DESIGN		
D	9/19/25	-	80% DESIGN		

NOT FOR CONSTRUCTION

NO.	DATE	DRAWN	REVISIONS -	CHK'D	APP'D

80% DESIGN REVIEW SEP 19 , 2025

Jacobs
2600 MICHELSON DRIVE, SUITE 500
IRVINE, CA 92612
T: (949) 224-7500
F: (949) 224-7501

REGISTERED PROFESSIONAL ENGINEER — MICHAEL S. McAMIS — No. 60573 — CIVIL — STATE OF CALIFORNIA

SCALE:	1"=40'
DRAWN:	E. FLORES
CHECKED:	G. NGUYEN
DESIGNED:	S. MCAMIS
	ENGINEER / ARCHITECT

TERMINAL ISLAND MARITIME SUPPORT FACILITY

SEWER PLAN - AREA 6

THE PORT OF LOS ANGELES
ENGINEERING DIVISION
425 S. PALOS VERDES STREET SAN PEDRO CA 90731-3309

DRAWING NUMBER 1-3513

SHEET NUMBER SS-07

POLAPRO1_04.0223_BWD

MATCHLINE, SEE DRAWING SS-07 FOR CONTINUATION

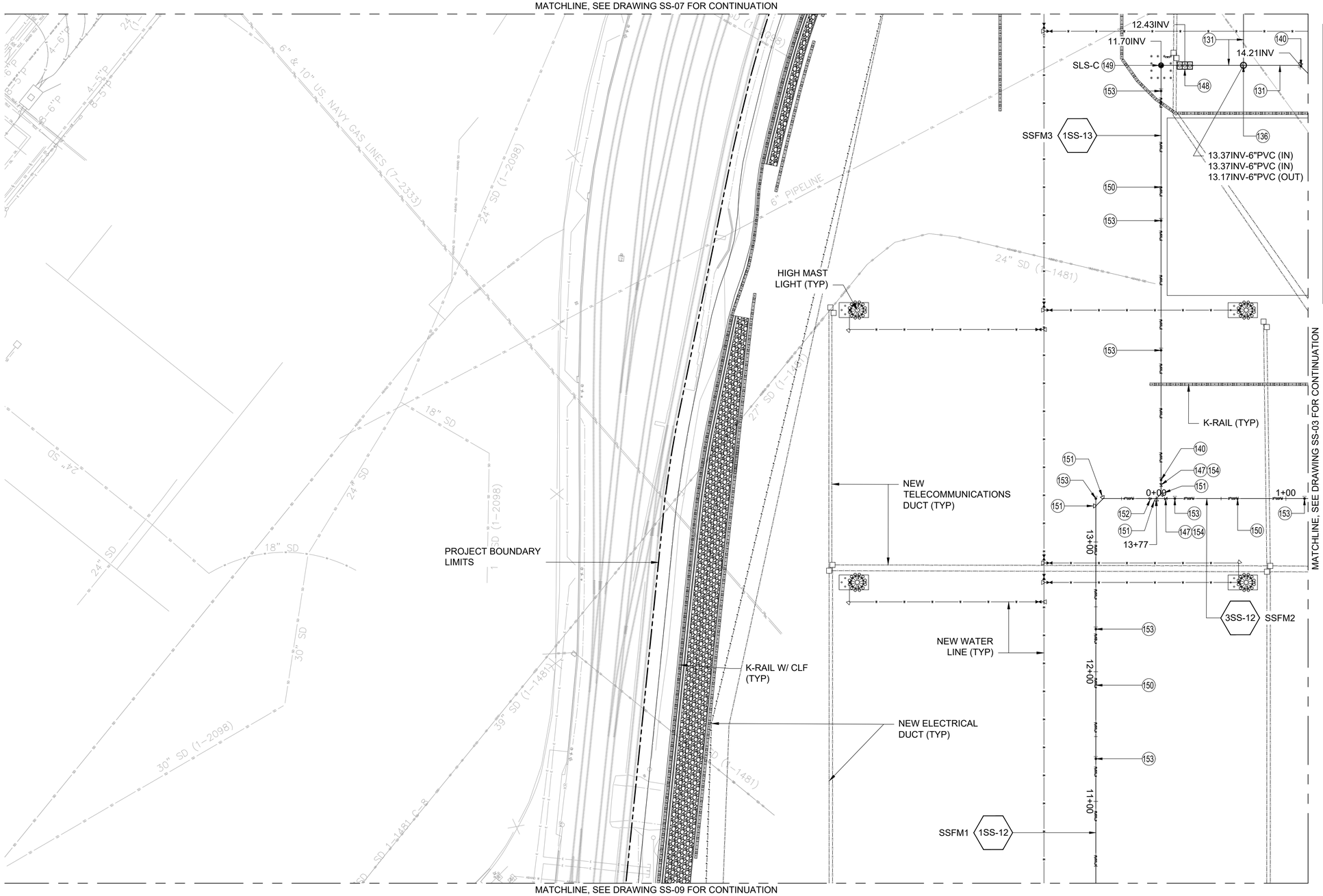

SEWER CONSTRUCTION NOTES:

LEGEND OF CONSTRUCTION NOTES

EXISTING/PROTECT ◯ CONSTRUCT

No.	CONSTRUCTION ITEM	REFERENCE DWG
131	PVC SEWER PIPE; 6"d, s=0.02 (UNO)	
136	SEWER MANHOLE	LADPW STD PL 1-140-0
140	SEWER CLEANOUT STRUCTURE (SCO)	LADPW STD PL 1-164-0
144	JACK AND BORE	
147	3" SWING CHECK VALVE	
148	OIL WATER SEPARATOR; 5,000 GAL	1SS-19
149	SEWER LIFT STATION	1SS-17, 3SS-17, 1SS-18
150	SEWER FORCE MAIN (SSFM) C900 PVC; LESS THAN 4" USE SCH 80 PVC	
151	THRUST BLOCK	
152	REDUCER	
153	FORCE MAIN CLEAN SEWER CLEANOUT STRUCTURE (SCO)	3SS-18
154	SWING CHECK VALVE VAULT	5SS-18

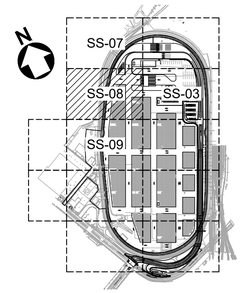

KEY MAP

40' 0' 40' 80'

SCALE: 1" = 40'

7SS-01 / SS-08 SEWER PLAN - AREA 7

SCALE: 1" = 40'

NO.	DATE	DRAWN	REVISIONS -	CHK'D	APP'D
C	7/18/25	-	40% DESIGN		
D	9/19/25	-	80% DESIGN		

NOT FOR CONSTRUCTION

NO.	DATE	DRAWN	REVISIONS -	CHK'D	APP'D
			80% DESIGN REVIEW SEP 19 , 2025		

Jacobs
3500 MICHELSON DRIVE, SUITE 600
IRVINE, CA 92612
T: (949) 224-7500
F: (949) 224-7501

REGISTERED PROFESSIONAL ENGINEER MICHAEL S. McAMIS No. 60573 CIVIL STATE OF CALIFORNIA

SCALE: 1"=40'
DRAWN: E. FLORES
CHECKED: G. NGUYEN
DESIGNED: S. MCAMIS
ENGINEER / ARCHITECT

TERMINAL ISLAND MARITIME SUPPORT FACILITY

SEWER PLAN - AREA 7

THE PORT OF LOS ANGELES
ENGINEERING DIVISION
425 S. PALOS VERDES STREET SAN PEDRO CA 90731-3309

DRAWING NUMBER 1-3513

SHEET NUMBER SS-08

POLAPRD1_042023_BWD

MATCHLINE, SEE DRAWING SS-08 FOR CONTINUATION

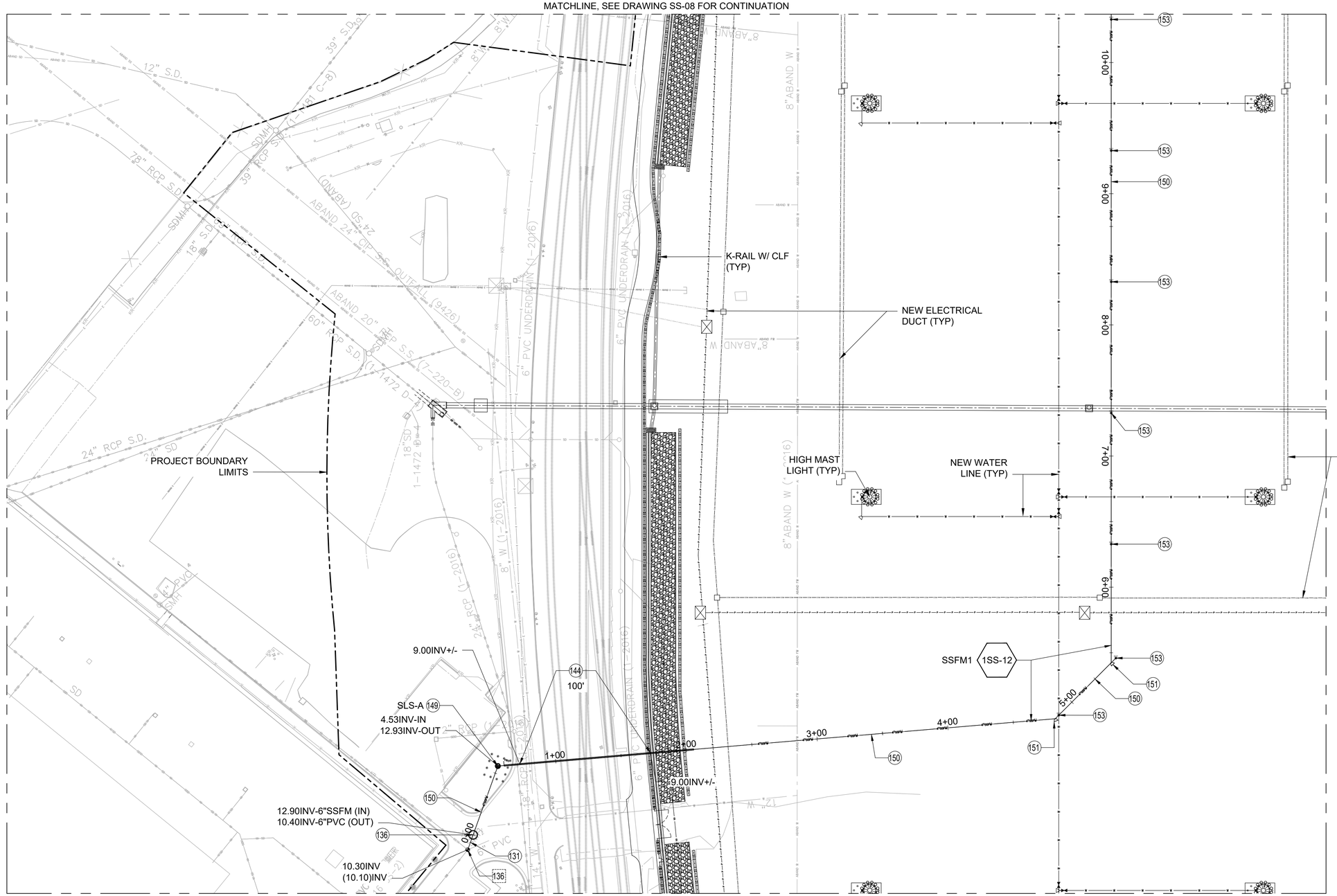

SEWER CONSTRUCTION NOTES:

LEGEND OF CONSTRUCTION NOTES

EXISTING/PROTECT ◯ CONSTRUCT

No.	CONSTRUCTION ITEM	REFERENCE DWG
131	PVC SEWER PIPE; 6"d, s=0.02 (UNO)	
136	SEWER MANHOLE	LADPW STD PL 1-140-0
140	SEWER CLEANOUT STRUCTURE (SCO)	LADPW STD PL 1-164-0
144	JACK AND BORE	
147	3" SWING CHECK VALVE	
148	OIL WATER SEPARATOR; 5,000 GAL	1SS-19
149	SEWER LIFT STATION	1SS-17, 3SS-17, 1SS-18
150	SEWER FORCE MAIN (SSFM) C900 PVC; LESS THAN 4" USE SCH 80 PVC	
151	THRUST BLOCK	
152	REDUCER	
153	FORCE MAIN CLEAN SEWER CLEANOUT STRUCTURE (SCO)	3SS-18
154	SWING CHECK VALVE VAULT	5SS-18

8SS-01 / SS-09 SEWER PLAN - AREA 8

SCALE: 1" = 40'

N

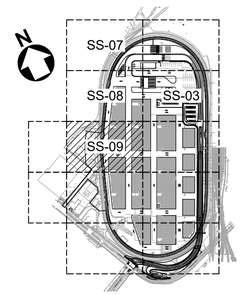

KEY MAP

40' 0' 40' 80'

SCALE: 1" = 40'

NO.	DATE	DRAWN	REVISIONS -	CHK'D	APP'D
C	7/18/25	-	40% DESIGN		
D	9/19/25	-	80% DESIGN		

NOT FOR CONSTRUCTION

NO.	DATE	DRAWN	REVISIONS -	CHK'D	APP'D
			80% DESIGN REVIEW SEP 19 , 2025		

Jacobs
2600 MICHELSON DRIVE, SUITE 500
IRVINE, CA 92612
T (949) 224-7500
F (949) 224-7501

REGISTERED PROFESSIONAL ENGINEER MICHAEL S. McAMIS No. 60573 CIVIL STATE OF CALIFORNIA

SCALE:	1"=40'
DRAWN:	E. FLORES
CHECKED:	G. NGUYEN
DESIGNED:	S. MCAMIS
	ENGINEER / ARCHITECT

TERMINAL ISLAND MARITIME SUPPORT FACILITY

SEWER PLAN - AREA 8

THE PORT OF LOS ANGELES
ENGINEERING DIVISION
425 S. PALOS VERDES STREET SAN PEDRO CA 90731-3309

DRAWING NUMBER 1-3513

SHEET NUMBER SS-09

POLAPRO1_042023_BWD

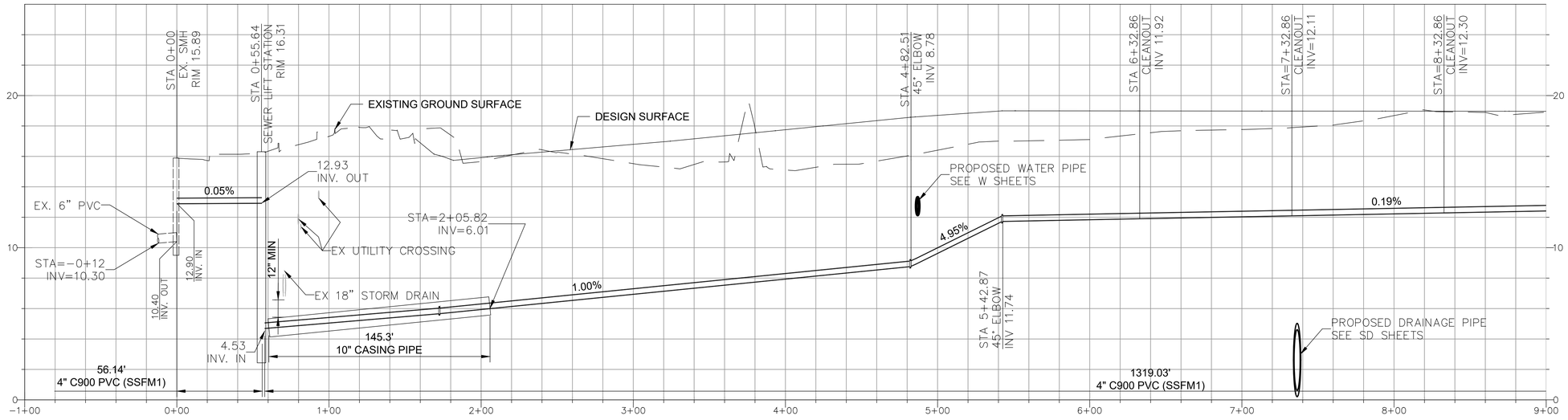

1SS-12
SS-08
SS-09

SSFM1 SEWER PROFILE

SCALE: H: 1"=40' , V: 1"=4'

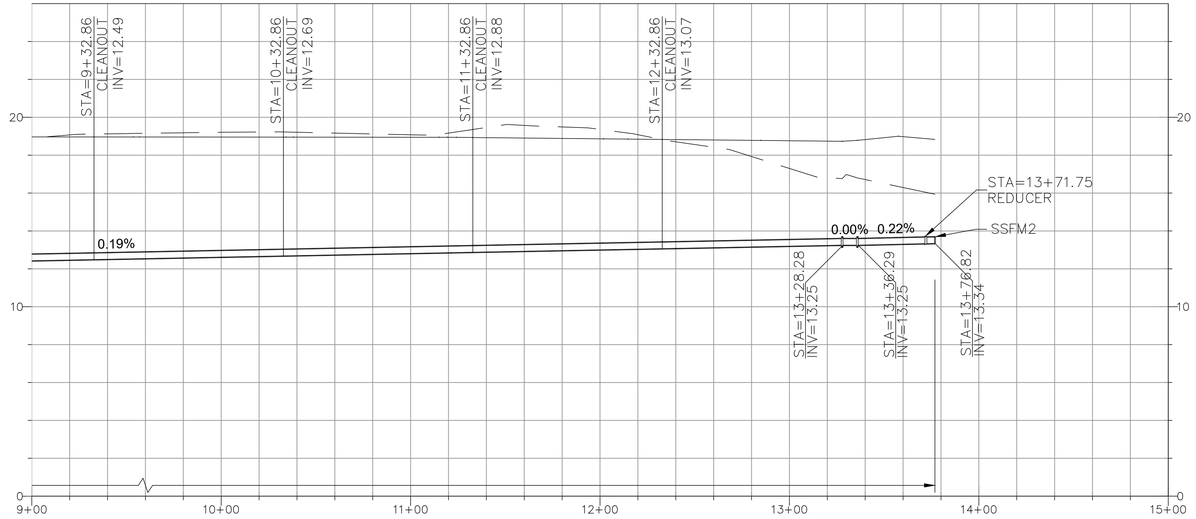

2SS-12
SS-08
SS-09

SSFM1 SEWER PROFILE

SCALE: H: 1"=40' , V: 1"=4'

NO.	DATE	DRAWN	REVISIONS -	CHK'D	APP'D
A	9/19/25	-	80% DESIGN		

NOT FOR CONSTRUCTION

NO.	DATE	DRAWN	REVISIONS -	CHK'D	APP'D
			80% DESIGN REVIEW SEP 19 , 2025		

Jacobs
2600 MICHELSON DRIVE, SUITE 600
IRVINE, CA 92612
T: (949) 224-7500
F: (949) 224-7501

REGISTERED PROFESSIONAL ENGINEER
MICHAEL S. McAMIS
No. 60573
CIVIL
STATE OF CALIFORNIA

SCALE: AS SHOWN
DRAWN: N. ELSALHAT
CHECKED: G. NGUYEN
DESIGNED: S. MCAMIS
ENGINEER / ARCHITECT

TERMINAL ISLAND MARITIME SUPPORT FACILITY

SEWER PROFILE - 1

THE PORT OF LOS ANGELES
ENGINEERING DIVISION
425 S. PALOS VERDES STREET SAN PEDRO CA 90731-3309

DRAWING NUMBER: 1-3513
SHEET NUMBER: SS-12

POLAPRD1_042023_BWD

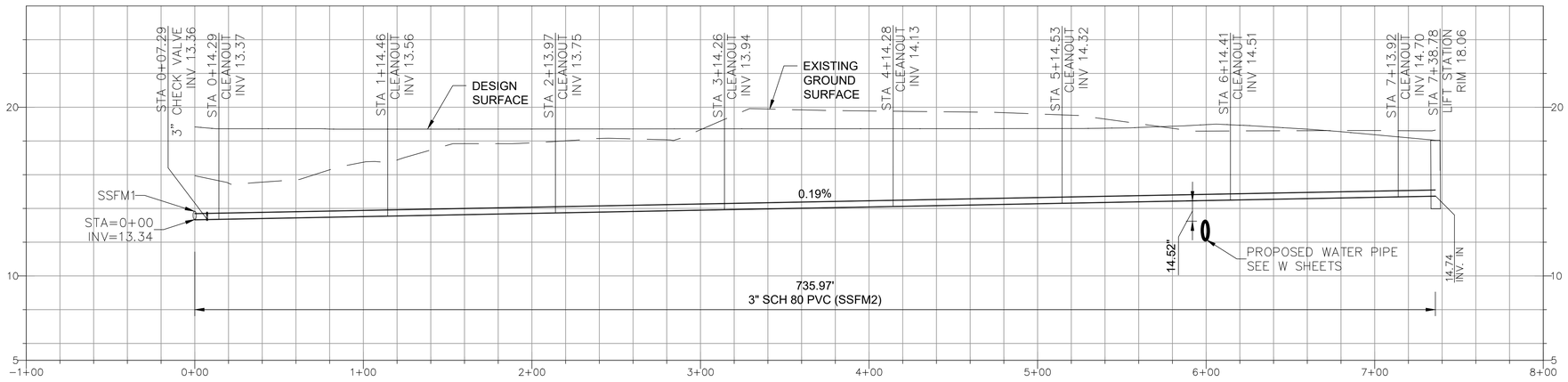

1SS-13 / SS-03 / SS-09

SSFM2 SEWER PROFILE

SCALE: H: 1"=40' , V: 1"=4'

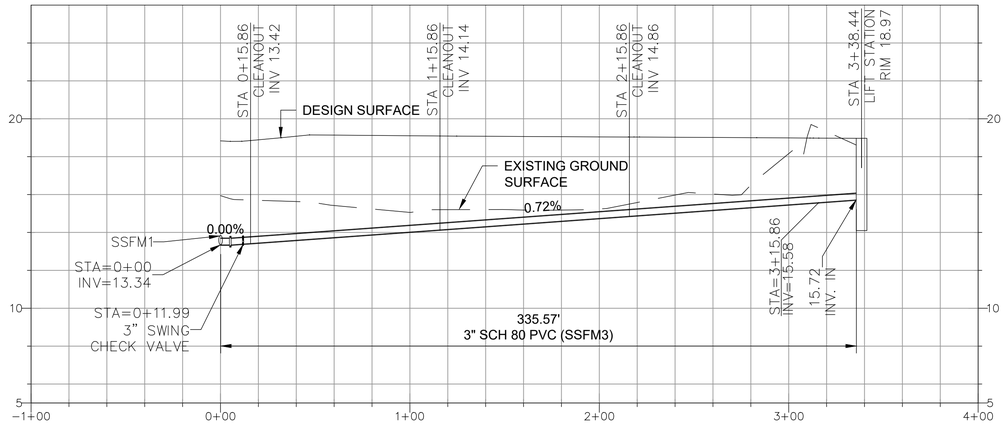

2SS-13 / SS-08

SSFM3 SEWER PROFILE

SCALE: H: 1"=40' , V: 1"=4'

NO.	DATE	DRAWN	REVISIONS -	CHK'D	APP'D
A	9/19/25	-	80% DESIGN		

NOT FOR CONSTRUCTION

NO.	DATE	DRAWN	REVISIONS -	CHK'D	APP'D
			80% DESIGN REVIEW SEP 19 , 2025		

Jacobs
2920 MICHELSON DRIVE, SUITE 500
IRVINE, CA 92612
T: (949) 224-7500
F: (949) 224-7501

REGISTERED PROFESSIONAL ENGINEER
MICHAEL S. MCAMIS
No. 60573
CIVIL
STATE OF CALIFORNIA

SCALE: AS SHOWN
DRAWN: N ELSALHAT
CHECKED: G. NGUYEN
DESIGNED: S. MCAMIS
ENGINEER / ARCHITECT

TERMINAL ISLAND MARITIME SUPPORT FACILITY

SEWER PROFILE - 2

THE PORT OF LOS ANGELES
ENGINEERING DIVISION
425 S. PALOS VERDES STREET SAN PEDRO CA 90731-3309

DRAWING NUMBER: 1-3513

SHEET NUMBER: SS-13

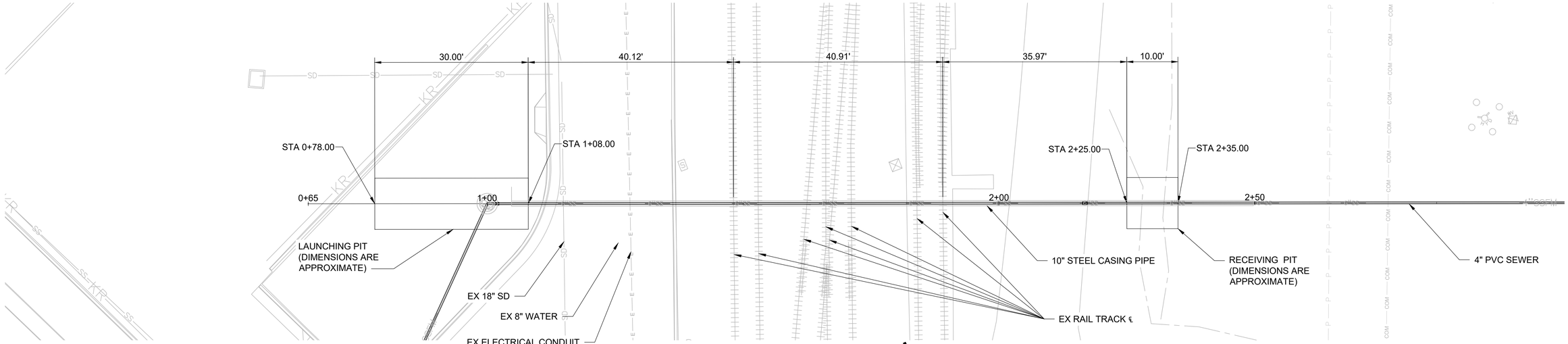

NOTE

1. LAUNCHING AND RECEIVING PIT DIMENSIONS SHOWN ARE INDICATIVE ONLY.

1SS-14 / SS-14 PLAN VIEW
SCALE: 1" = 10'

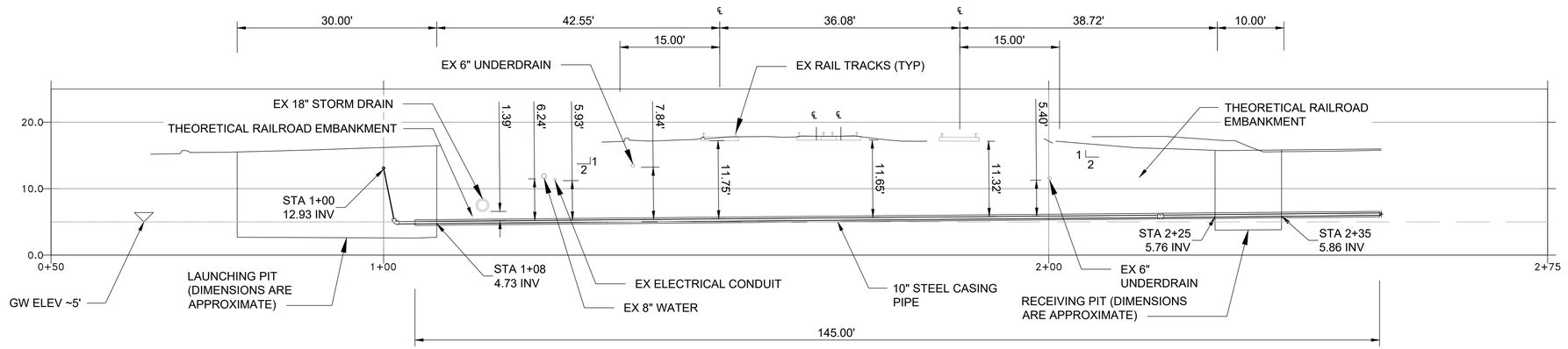

2SS-14 / SS-14 PROFILE VIEW
SCALE: 1" = 10'

NO.	DATE	DRAWN	REVISIONS -	CHK'D	APP'D
D	9/19/25	-	80% DESIGN		

NOT FOR CONSTRUCTION

NO.	DATE	DRAWN	REVISIONS -	CHK'D	APP'D

80% DESIGN REVIEW
SEP 19 , 2025

Jacobs
2600 MICHELSON DRIVE, SUITE 500
IRVINE, CA 92612
T: (949) 224-7500
F: (949) 224-7501

REGISTERED PROFESSIONAL ENGINEER
MICHAEL S. MCAMIS
No. 60573
CIVIL
STATE OF CALIFORNIA

SCALE: AS SHOWN
DRAWN: B. ACKERMANN
CHECKED: G. NGUYEN
DESIGNED: S. MCAMIS
ENGINEER / ARCHITECT

TERMINAL ISLAND MARITIME SUPPORT FACILITY

TRENCHLESS PLAN & PROFILE DETAILS

THE PORT OF LOS ANGELES
ENGINEERING DIVISION
425 S. PALOS VERDES STREET SAN PEDRO CA 90731-3309

DRAWING NUMBER 1-3513
SHEET NUMBER SS-14

POLAPRO1_04/2023_BWD

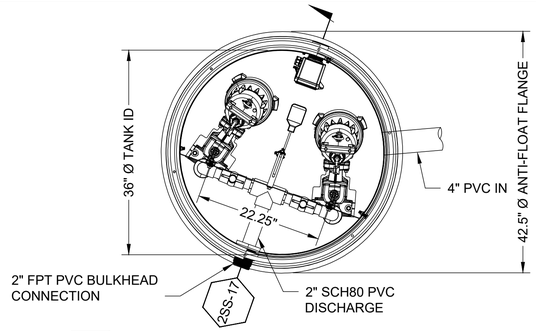

1SS-17 / SS-09 SEWER LIFT STATION A - PLAN

SCALE: NTS

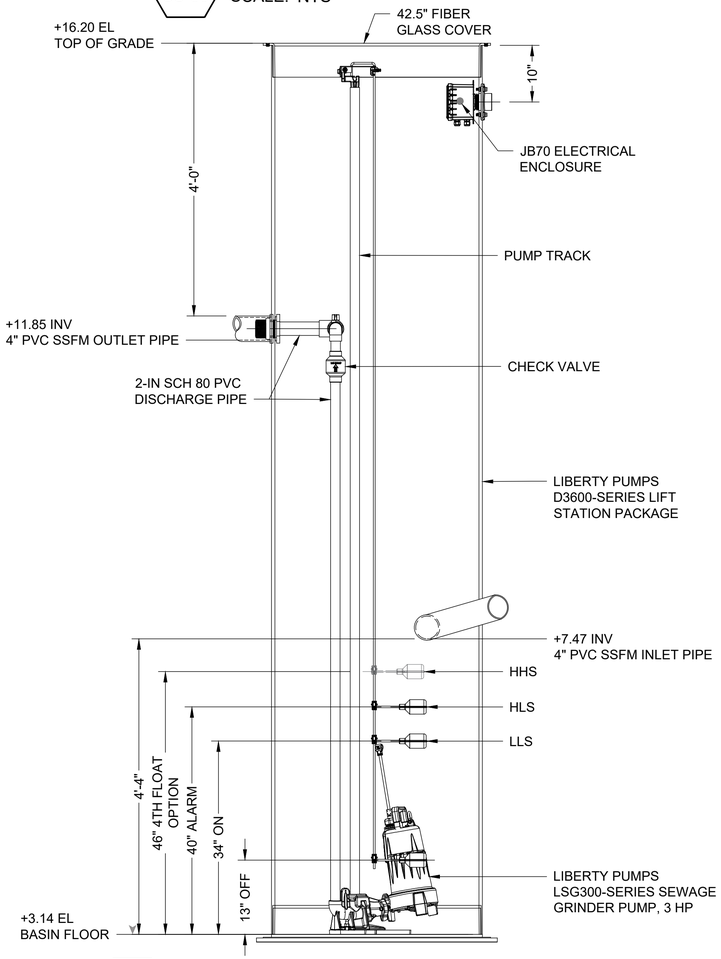

2SS-17 / 1SS-17 SEWER LIFT STATION A - SECTION

SCALE: NTS

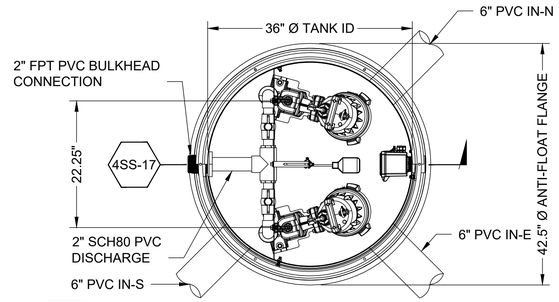

3SS-17 / SS-03 SEWER LIFT STATION B - PLAN

SCALE: NTS

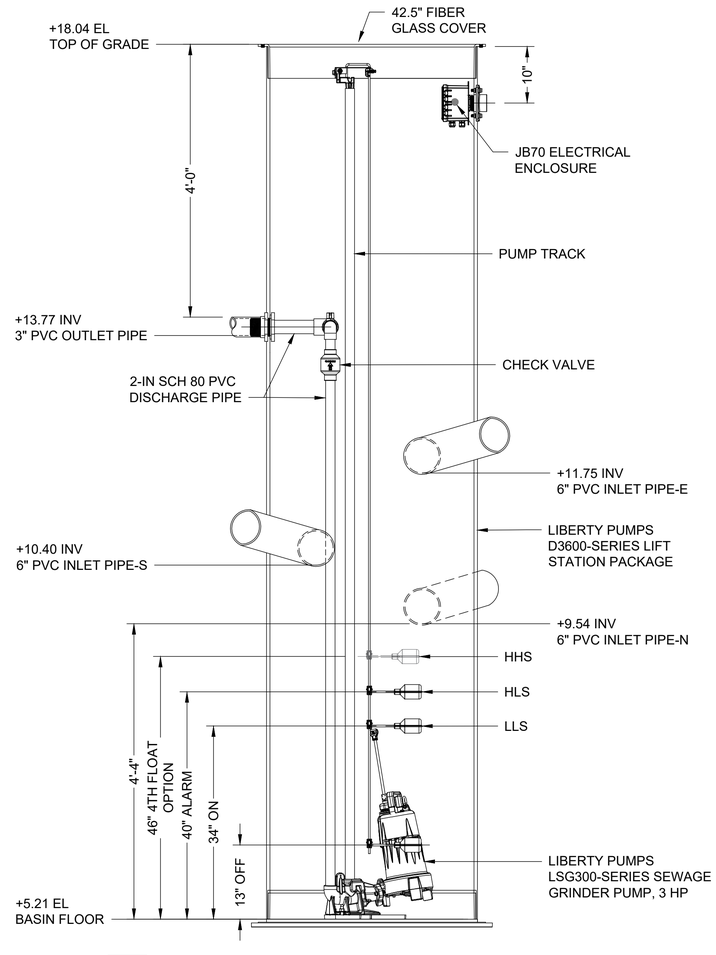

4SS-17 / 3SS-17 SEWER LIFT STATION B - SECTION

SCALE: NTS

NO.	DATE	DRAWN	REVISIONS -	CHK'D	APP'D
C	7/18/25	-	40% DESIGN		
D	9/19/25	-	80% DESIGN		

NOT FOR CONSTRUCTION

NO.	DATE	DRAWN	REVISIONS -	CHK'D	APP'D

80% DESIGN REVIEW SEP 19 , 2025

Jacobs
2900 MICHELSON DRIVE, SUITE 500
IRVINE, CA 92612
T: (949) 224-7500
F: (949) 224-7501

REGISTERED PROFESSIONAL ENGINEER — MICHAEL S. MCAMIS — No. 60573 — CIVIL — STATE OF CALIFORNIA

SCALE:	AS SHOWN
DRAWN:	M. BICKEL
CHECKED:	G. NGUYEN
DESIGNED:	S. MCAMIS
	ENGINEER / ARCHITECT

TERMINAL ISLAND MARITIME SUPPORT FACILITY

SEWER DETAILS

THE PORT OF LOS ANGELES
ENGINEERING DIVISION
425 S. PALOS VERDES STREET SAN PEDRO CA 90731-3309

DRAWING NUMBER	SHEET NUMBER
1-3513	SS-17

POLAPRDY_04/2023_BW3

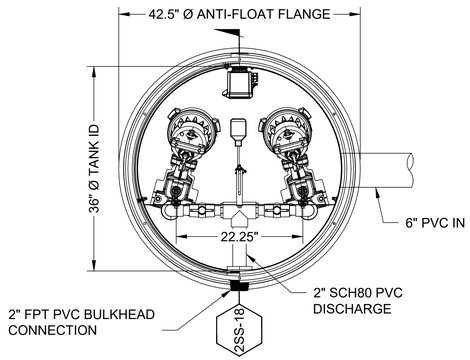

1SS-18 / SS-08 SEWER LIFT STATION C - PLAN
SCALE: NTS

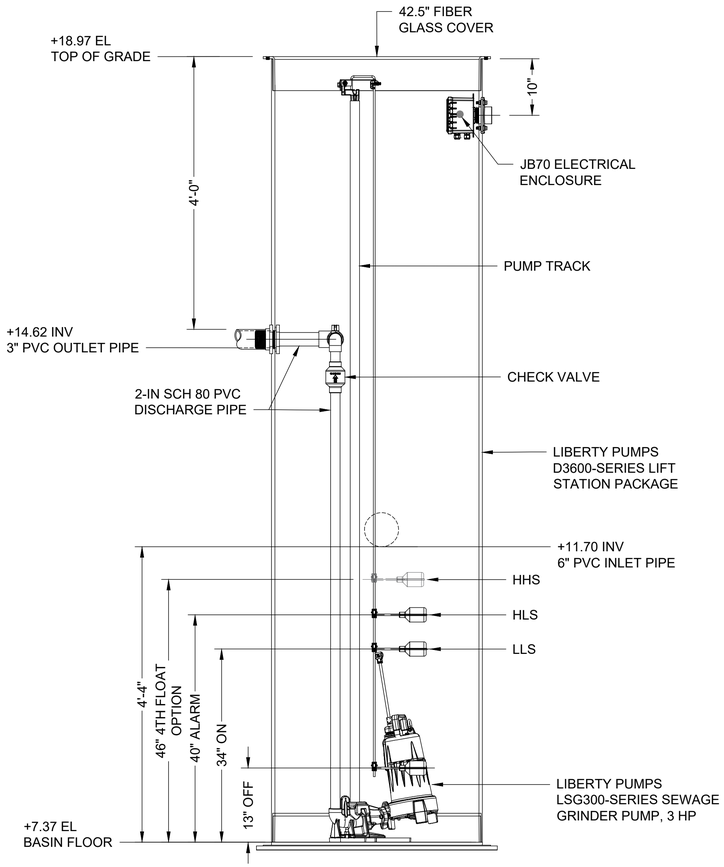

2SS-18 / 1SS-18 SEWER LIFT STATION C - SECTION
SCALE: NTS

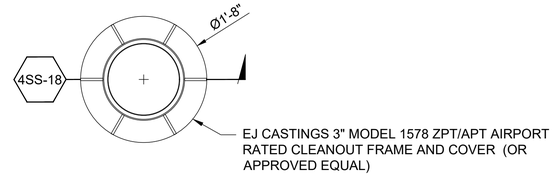

3SS-18 / SS-03, 08, 09 SSFM CLEANOUT ELEVATION
SCALE: NTS

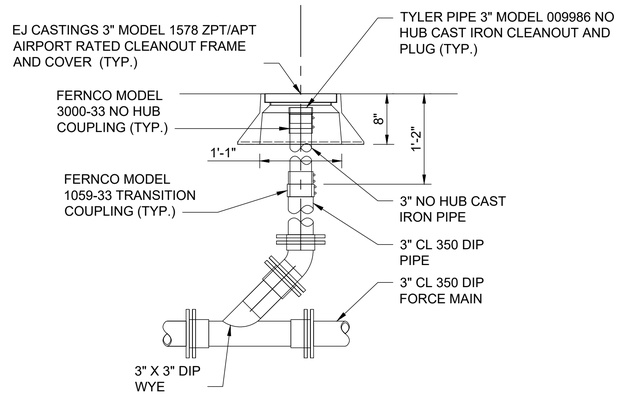

4SS-18 / 3SS-18 SSFM CLEANOUT ELEVATION
SCALE: NTS

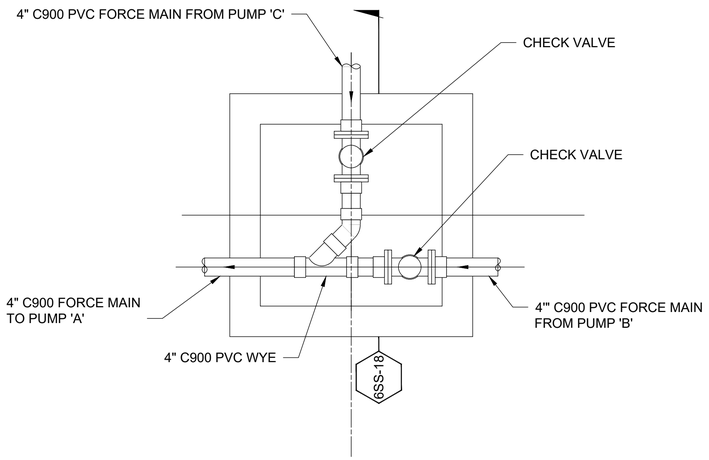

5SS-18 / SS-08 SWING CHECK VALVE VAULT - PLAN
SCALE: NTS

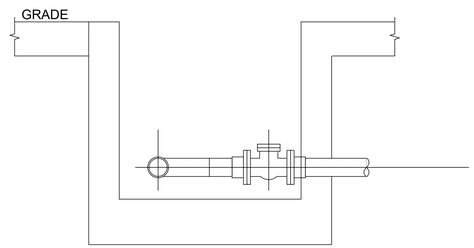

6SS-18 / 5SS-18 SWING CHECK VALVE VAULT - SECTION
SCALE: NTS

NO.	DATE	DRAWN	REVISIONS -	CHK'D	APP'D
C	7/18/25	-	40% DESIGN		
D	9/19/25	-	80% DESIGN		

NOT FOR CONSTRUCTION

NO.	DATE	DRAWN	REVISIONS -	CHK'D	APP'D
			80% DESIGN REVIEW SEP 19 , 2025		

Jacobs
2600 MICHELSON DRIVE, SUITE 500
IRVINE, CA 92612
T: (949) 224-7500
F: (949) 224-7501

REGISTERED PROFESSIONAL ENGINEER — MICHAEL S. McANIS — No. 60573 — CIVIL — STATE OF CALIFORNIA

SCALE:	AS SHOWN
DRAWN:	M. BICKEL
CHECKED:	S. NGUYEN
DESIGNED:	S. MCAMIS
	ENGINEER / ARCHITECT

TERMINAL ISLAND MARITIME SUPPORT FACILITY

SEWER DETAILS

THE PORT OF LOS ANGELES
ENGINEERING DIVISION
425 S. PALOS VERDES STREET SAN PEDRO CA 90731-3309

DRAWING NUMBER	SHEET NUMBER
1-3513	SS-18

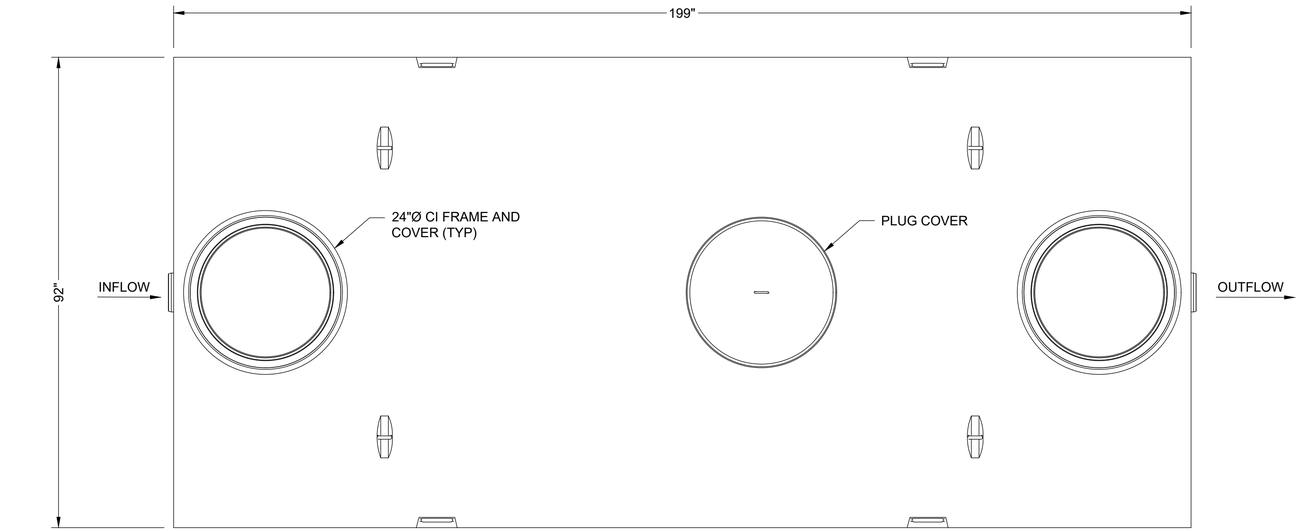

PLAN VIEW

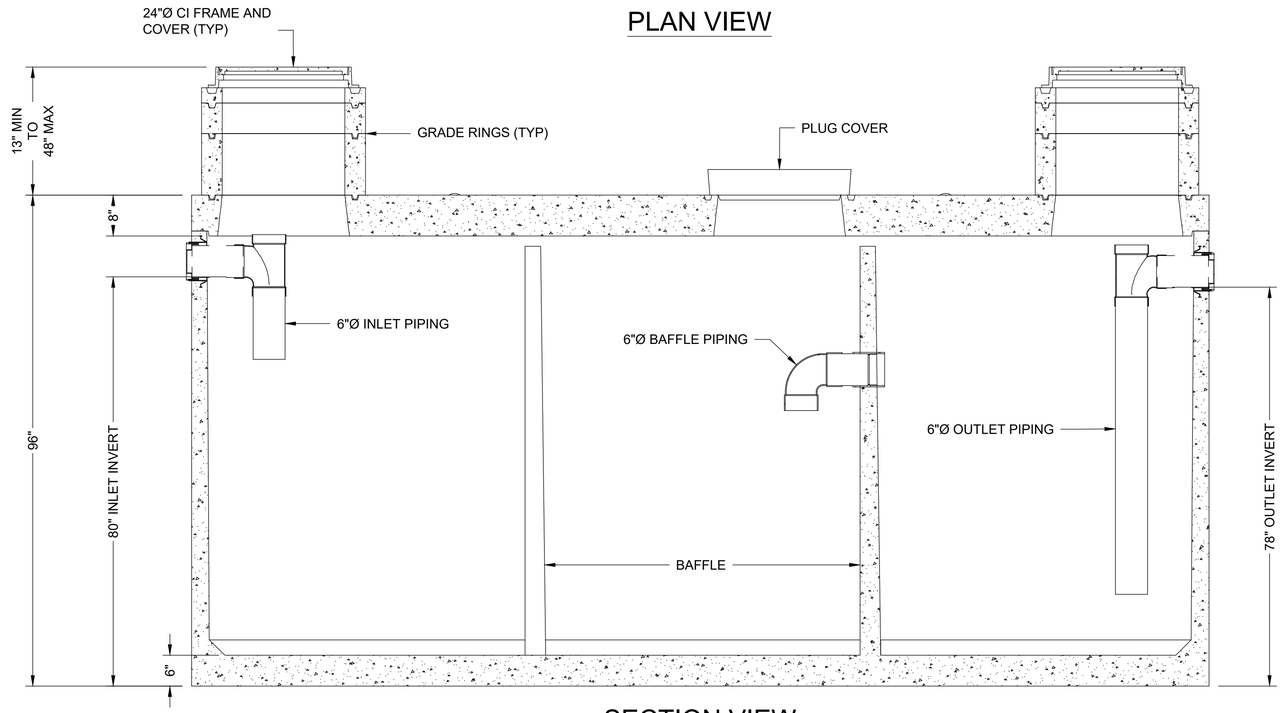

SECTION VIEW

NOTES:

1. LIQUID CAPACITY: 5,000 GALLONS.
2. WEIGHT: 39,073 LBS.
3. BOX DESIGN LOAD: A-16 (AASHTO HS20-44).
4. INSTALL PER MANUFACTURER'S RECOMMENDATIONS.
5. OIL WATER SEPARATOR SHALL BE JENSON PRECAST, TANK JZ 5000 GALLON 6-IN LAYOUT SAND-OIL INTERCEPTOR, 24"E, 24"B, 24"E SINGLE BAFFLE MODEL OR APPROVED EQUAL.

1SS-19 / SS-08 OIL WATER SEPARATOR DETAIL - 5,000 GALLON

SCALE: NTS

NO.	DATE	DRAWN	REVISIONS -	CHK'D	APP'D
D	9/19/25	-	80% DESIGN		

NOT FOR CONSTRUCTION

NO.	DATE	DRAWN	REVISIONS -	CHK'D	APP'D
			80% DESIGN REVIEW SEP 19 , 2025		

Jacobs
2600 MICHELSON DRIVE, SUITE 500
IRVINE, CA 92612
T: (949) 224-7500
F: (949) 224-7501

REGISTERED PROFESSIONAL ENGINEER
MICHAEL S. McAMIS
No. 60573
CIVIL
STATE OF CALIFORNIA

SCALE: AS SHOWN
DRAWN: M. BICKEL
CHECKED: G. NGUYEN
DESIGNED: S. MCAMIS
ENGINEER / ARCHITECT

TERMINAL ISLAND MARITIME SUPPORT FACILITY

SEWER DETAILS

THE PORT OF LOS ANGELES
ENGINEERING DIVISION
425 S. PALOS VERDES STREET SAN PEDRO CA 90731-3309

DRAWING NUMBER: 1-3513
SHEET NUMBER: SS-19

POLAPRDT_040520_BWD

POINT TABLE		
POINT	NORTHING	EASTING
1	XXXXXXX.XX	XXXXXXX.XX
2	XXXXXXX.XX	XXXXXXX.XX
3	XXXXXXX.XX	XXXXXXX.XX

NO.	DATE	DRAWN	REVISIONS -	CHK'D	APP'D
C	7/18/25	-	40% DESIGN		
D	9/19/25	-	80% DESIGN		

NOT FOR CONSTRUCTION

NO.	DATE	DRAWN	REVISIONS -	CHK'D	APP'D

80% DESIGN REVIEW
SEP 19 , 2025

Jacobs
2600 MICHELSON DRIVE, SUITE 500
IRVINE, CA 92612
T: (949) 224-7500
F: (949) 224-7501

REGISTERED PROFESSIONAL ENGINEER
MICHAEL S. McAMIS
No. 60573
CIVIL
STATE OF CALIFORNIA

SCALE: AS SHOWN
DRAWN: A. TRUJILLO
CHECKED: G. NGUYEN
DESIGNED: S. MCAMIS
ENGINEER / ARCHITECT

TERMINAL ISLAND MARITIME SUPPORT FACILITY

SEWER COORDINATE POINT TABLE

THE PORT OF LOS ANGELES
ENGINEERING DIVISION
425 S. PALOS VERDES STREET SAN PEDRO CA 90731-3309

DRAWING NUMBER 1-3513
SHEET NUMBER SS-23

POLAPRO1_04/2023_BWD

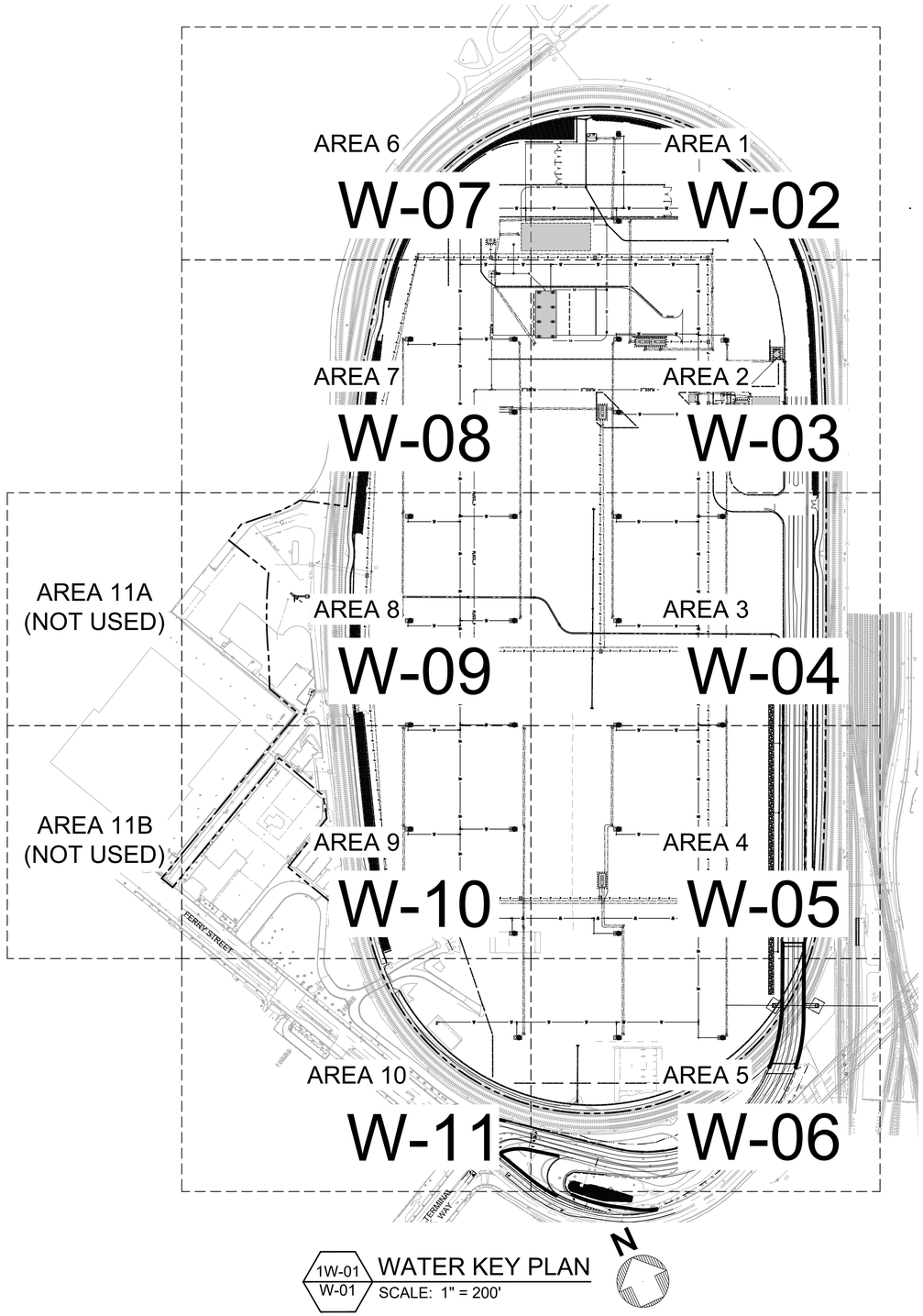

1W-01 / W-01 WATER KEY PLAN
SCALE: 1" = 200'

GENERAL WATER PLAN NOTES:

1. PROVIDE LABOR, MATERIALS, TOOLS, EQUIPMENT AND OTHER NECESSARY APPURTENANCES TO INSTALL WATER PIPING, VALVES, VALVE BOXES, POSITION INDICATORS, FITTINGS, FIRE HYDRANTS AND GUARD POSTS FOR THE WATER SYSTEM SHOWN ON DRAWINGS.
2. MATERIALS SHALL BE U.L. LISTED OR APPROVED BY CITY OF LOS ANGELES BUILDING AND SAFETY, NEW, UNDAMAGED AND FIRST CLASS IN QUALITY AND MANUFACTURE.
3. PIPES 3" AND SMALLER SHALL BE COPPER TYPE "K" WITH WROUGHT OR CAST COPPER FITTINGS.
4. INSTALL UNDERGROUND PIPES AT MINIMUM OF 3 FEET BELOW FINISHED SURFACE OR AS SHOWN ON DRAWINGS, OR AS DIRECTED BY ENGINEER. AVOID INTERFERENCE WITH EXISTING UNDERGROUND PIPING OR SITE UTILITIES.
5. SEPARATION OF WATER PIPE AND SANITARY SEWER SHALL BE PER THE STATE OF CALIFORNIA, DEPARTMENT OF HEALTH SERVICES "CRITERIA FOR THE SEPARATION OF WATER MAINS AND SANITARY SEWERS" AS LAST REVISED.
6. INSTALL WATER LINES AFTER CONTRACTOR HAS RAISED THE AREA ALONG PIPE ALIGNMENT TO TOP OF SUBGRADE ELEVATION PER GRADING SHEETS.
7. SHOWN LOCATIONS OF EXISTING SUBSTRUCTURES ARE APPROXIMATE ONLY, EXECUTE EXCAVATION WITH EXTRA CARE TO PREVENT DAMAGING EXISTING INSTALLATIONS. POTHOLE, (IN COORDINATION W/CORRESPONDING OWNERS), FOR ANY EXISTING SUB INSTALLATIONS IN ORDER TO DETERMINE THEIR EXACT LOCATIONS AND ELEVATIONS BEFORE COMMENCING EXCAVATION.
8. ANY DISCREPANCY BETWEEN DRAWINGS AND FIELD CONDITIONS SHALL BE BROUGHT BY CONTRACTOR TO THE ATTENTION OF ENGINEER FOR CLARIFICATION.
9. IN CASE OF DISCREPANCIES BETWEEN DRAWINGS AND SPECIFICATIONS, SPECIFICATIONS SHALL GOVERN.
10. SUBMIT TO ENGINEER A RECORD OF THE COORDINATES AND ELEVATIONS OF BENDS, TEES, CROSSES, PLUGS, AND VALVES PRIOR TO COVERING FITTINGS. THIS SHALL BE DONE ON COPIES OF WATER SHEETS ALLOCATED ONLY FOR THIS PURPOSE.
11. PRIOR TO ANY EXCAVATION, NOTIFY "UNDERGROUND SERVICE ALERT" SO THAT EXISTING SUB-STRUCTURES WITHIN THE PROJECT LIMITS NOT SHOWN ON THESE DRAWINGS SHALL BE IDENTIFIED AND MARKED AS TO OWNERSHIP AND LOCATION.
12. HYDROSTATICALLY TEST NEW WATER LINES PER SPECIFICATIONS. PRIOR TO BACKFILL, CONTRACTOR HAS THE OPTION TO POINT LOAD PIPE JOINT SECTIONS IN ORDER TO PRESSURE TEST BUT MUST LEAVE ALL JOINTS EXPOSED TO ALLOW FOR VISUAL INSPECTION OF LEAKS.
13. COORDINATE WORK WITH OTHER DISCIPLINES.
14. SCHEDULING, LINE SHUTDOWN, DRAINAGE, TIE-IN, SUPPORTS, INSTALLATION OF NEW LINE, WALL PENETRATIONS, PRESSURE TESTING, DISINFECTION, FLUSHING, DOCK SURFACING, ACTIVATION SERVICE, ETC., SHALL COMPLY WITH THE LOCAL WATER, FIRE, AND OTHER AUTHORITY HAVING JURISDICTION STANDARDS AND REGULATIONS AND SHALL BE COORDINATED WITH WATER, FIRE, AND OTHER AUTHORITY HAVING JURISDICTION DEPARTMENTS. PRIOR APPROVAL OF AND NOTICE TO PROCEED WITH TIE-INS ARE REQUIRED BY THE LOCAL AUTHORITY HAVING JURISDICTION FOR THE DOMESTIC WATER AND FIRE WATER SYSTEMS. AUTHORIZED REPRESENTATIVE SHALL WITNESS TIE-IN, AS REQUIRED.
15. UPON COMPLETION OF FIRE WATER WORK, PERFORM A FIRE WATER PRESSURE TEST OF 200 PSI FOR TWO HOURS, DURING WHICH THERE IS TO BE NO REDUCTION IN TEST PRESSURE. IF A REDUCTION SHOULD OCCUR, LEAK(S) SHALL BE LOCATED, REPAIRED AND THE TEST REPEATED. IN ADDITION, NEWLY INSTALLED FIRE SERVICE LINES SHALL PASS HYDROSTATIC AND HYDRODYNAMIC TESTING REQUIREMENTS AS PERFORMED BY THE LOCAL FIRE MARSHALL.
16. THE FIRE WATER SYSTEM SHALL ONLY EMPLOY THE USE OF APPROVED MATERIALS AND DEVICES, PIPING MATERIAL AND BE IN COMPLIANCE WITH NFPA 14, NFPA 303 AND REQUIREMENTS OF AUTHORITY HAVING JURISDICTION. MATERIALS SHALL BE UL/FM LISTED WHERE AVAILABLE OR AS APPROVED BY CITY OF LOS ANGELES BUILDING DEPARTMENT.
17. THE STANDPIPE SYSTEM SHALL BE IN COMPLIANCE WITH NFPA 14.
18. ANY INTERFERENCES WITH NEW UTILITIES, REFERENCE DETAIL 3W-18.
19. ADJUST ANY EXISTING WATER METER AND VALVE LIDS TO FINISH GRADE WITHIN PROJECT SITE LIMITS.

LEGEND OF CONSTRUCTION NOTES

COORDINATE	
CONSTRUCT	REMODEL EXISTING
EXISTING	REMOVE AND CONSTRUCT
REMOVE	RELOCATE
NOT IN CONTRACT	ABANDON

200' 0' 200' 400'
SCALE: 1" = 200'

NO.	DATE	DRAWN	REVISIONS -	CHK'D	APP'D
C	7/18/25	-	40% DESIGN		
D	9/19/25	-	80% DESIGN		

NOT FOR CONSTRUCTION

NO.	DATE	DRAWN	REVISIONS -	CHK'D	APP'D
			80% DESIGN REVIEW SEP 19 , 2025		

Jacobs
2600 MICHELSON DRIVE, SUITE 600
IRVINE, CA 92612
T: (949) 224-7500
F: (949) 224-7501

REGISTERED PROFESSIONAL ENGINEER
MICHAEL S. McAMIS
No. 60573
CIVIL
STATE OF CALIFORNIA

SCALE: 1"=200'
DRAWN: E. FLORES
CHECKED: G. NGUYEN
DESIGNED: S. MCAMIS
ENGINEER / ARCHITECT

TERMINAL ISLAND MARITIME SUPPORT FACILITY

WATER KEY PLAN AND NOTES

THE PORT OF LOS ANGELES
ENGINEERING DIVISION
425 S. PALOS VERDES STREET SAN PEDRO CA 90731-3309

DRAWING NUMBER: 1-3513
SHEET NUMBER: W-01

POLAPRD1_042023_BWD

WATER CONSTRUCTION NOTES:

LEGEND OF CONSTRUCTION NOTES		
EXISTING/PROTECT	CONSTRUCT	
No.	CONSTRUCTION ITEM	REFERENCE DWG
41	FIRE HYDRANT	1W-17, 1W-18
171	BACK FLOW PREVENTER	2W-18
172	COPPER PIPE	
174	FITTING	2W-16
175	WATER VALVE	
177	PVC C900 WATER PIPE	
179	REDUCER	
180	STUB OUT FOR FUTURE POC	
181	THRUST BLOCK	1W-16
182	CROSSING	3W-18

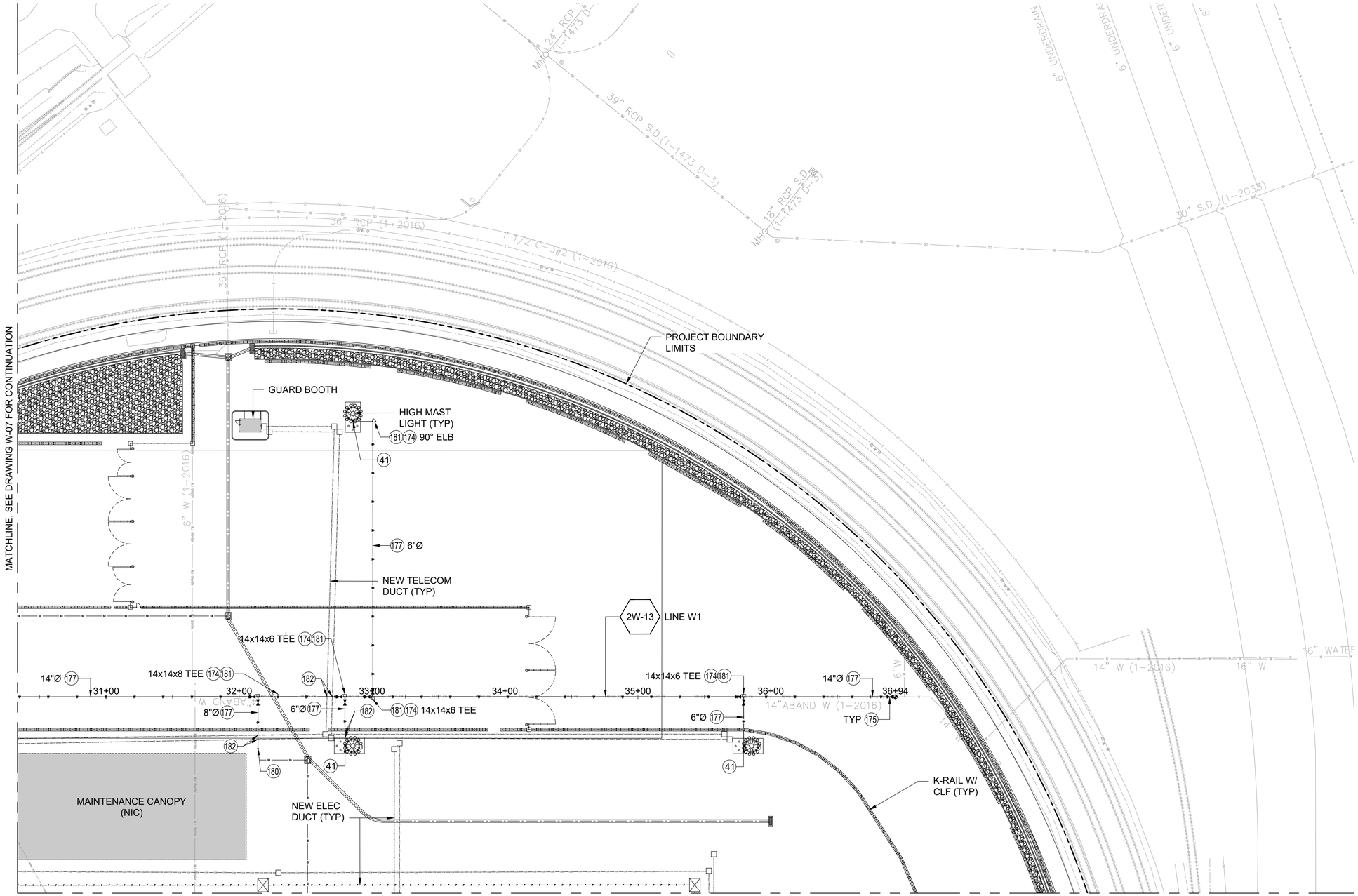

1W-02 / W-02 WATER PLAN - AREA 1

SCALE: 1" = 40'

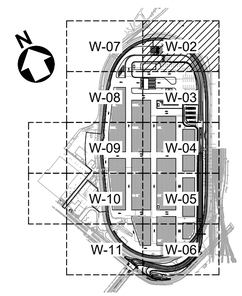

KEY MAP

40' 0' 40' 80'

SCALE: 1" = 40'

NO.	DATE	DRAWN	REVISIONS -	CHK'D	APP'D
C	7/18/25	-	40% DESIGN		
D	9/19/25	-	80% DESIGN		

NOT FOR CONSTRUCTION

NO.	DATE	DRAWN	REVISIONS -	CHK'D	APP'D

80% DESIGN REVIEW SEP 19 , 2025

Jacobs
2600 MICHELSON DRIVE, SUITE 500
IRVINE, CA 92612
T: (949) 224-7500
F: (949) 224-7501

REGISTERED PROFESSIONAL ENGINEER MICHAEL S. McAMIS No. 60573 CIVIL STATE OF CALIFORNIA

SCALE: 1"=40'
DRAWN: E. FLORES
CHECKED: G. NGUYEN
DESIGNED: S. MCAMIS
ENGINEER / ARCHITECT

TERMINAL ISLAND MARITIME SUPPORT FACILITY

WATER PLAN - AREA 1

THE PORT OF LOS ANGELES
ENGINEERING DIVISION
425 S. PALOS VERDES STREET SAN PEDRO CA 90731-3309

DRAWING NUMBER 1-3513

SHEET NUMBER W-02

POLAPRO1_042023_BWD

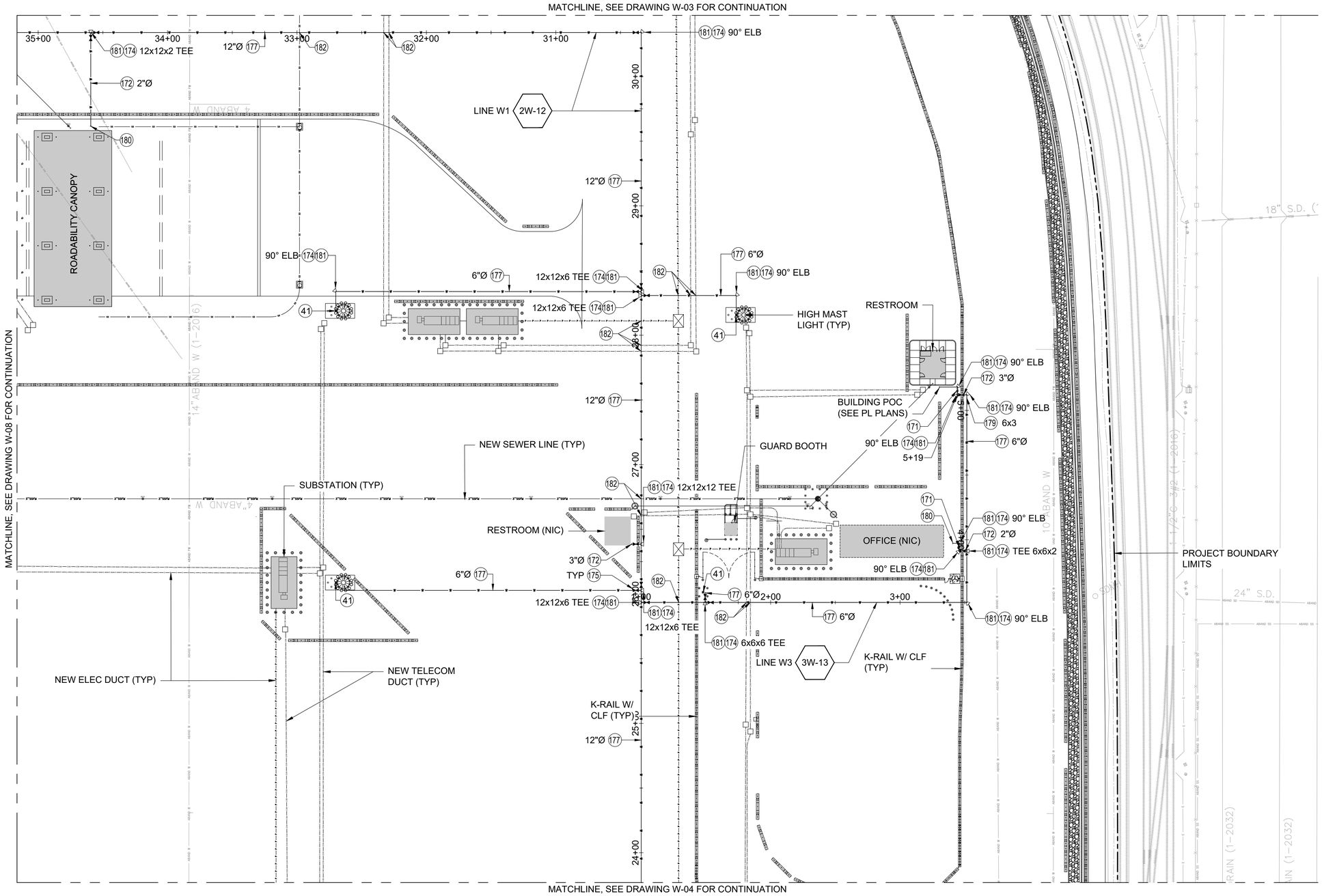

1W-03
W-03
WATER PLAN - AREA 2
SCALE: 1" = 40'

WATER CONSTRUCTION NOTES:

LEGEND OF CONSTRUCTION NOTES

EXISTING/PROTECT CONSTRUCT

No.	CONSTRUCTION ITEM	REFERENCE DWG
41	FIRE HYDRANT	1W-17, 1W-18
171	BACK FLOW PREVENTER	2W-18
172	COPPER PIPE	
174	FITTING	2W-16
175	WATER VALVE	
177	PVC C900 WATER PIPE	
179	REDUCER	
180	STUB OUT FOR FUTURE POC	
181	THRUST BLOCK	1W-16
182	CROSSING	3W-18

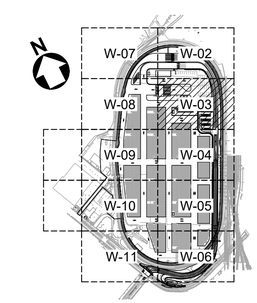

KEY MAP

40' 0' 40' 80'
SCALE: 1" = 40'

NO.	DATE	DRAWN	REVISIONS -	CHK'D	APP'D
C	7/18/25	-	40% DESIGN		
D	9/19/25	-	80% DESIGN		

NOT FOR CONSTRUCTION

NO.	DATE	DRAWN	REVISIONS -	CHK'D	APP'D

80% DESIGN REVIEW
SEP 19 , 2025

Jacobs
2600 MICHELSON DRIVE, SUITE 500
IRVINE, CA 92612
T: (949) 224-7500
F: (949) 224-7501

REGISTERED PROFESSIONAL ENGINEER
MICHAEL S. McAMIS
No. 60573
CIVIL
STATE OF CALIFORNIA

SCALE: 1"=40'
DRAWN: E. FLORES
CHECKED: G. NGUYEN
DESIGNED: S. MCAMIS
ENGINEER / ARCHITECT

TERMINAL ISLAND MARITIME SUPPORT FACILITY

WATER PLAN - AREA 2

THE PORT OF LOS ANGELES
ENGINEERING DIVISION
425 S. PALOS VERDES STREET SAN PEDRO CA 90731-3309

DRAWING NUMBER 1-3513
SHEET NUMBER W-03

POLAPR01_04/2023_BWD

MATCHLINE, SEE DRAWING W-03 FOR CONTINUATION

MATCHLINE, SEE DRAWING W-09 FOR CONTINUATION

MATCHLINE, SEE DRAWING W-05 FOR CONTINUATION

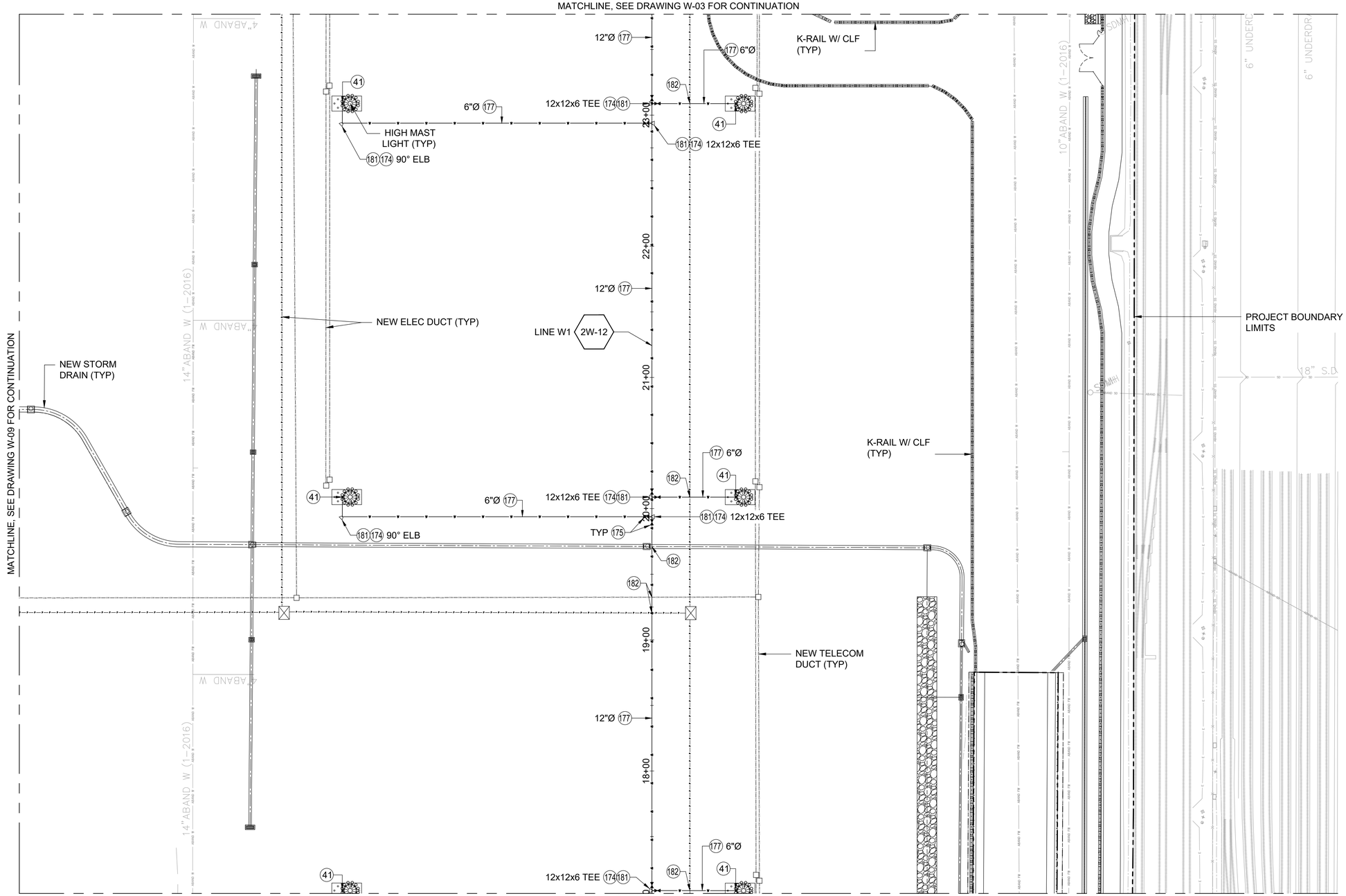

WATER CONSTRUCTION NOTES:

LEGEND OF CONSTRUCTION NOTES

EXISTING/PROTECT ◯ CONSTRUCT

No.	CONSTRUCTION ITEM	REFERENCE DWG
41	FIRE HYDRANT	1W-17, 1W-18
171	BACK FLOW PREVENTER	2W-18
172	COPPER PIPE	
174	FITTING	2W-16
175	WATER VALVE	
177	PVC C900 WATER PIPE	
179	REDUCER	
180	STUB OUT FOR FUTURE POC	
181	THRUST BLOCK	1W-16
182	CROSSING	3W-18

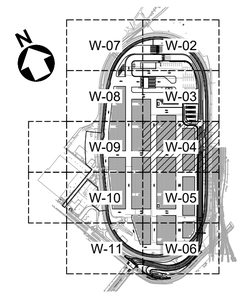

KEY MAP

40' 0' 40' 80'

SCALE: 1" = 40'

1W-04 / W-04 WATER PLAN - AREA 3

SCALE: 1" = 40'

NO.	DATE	DRAWN	REVISIONS -	CHK'D	APP'D
C	7/18/25	-	40% DESIGN		
D	9/19/25	-	80% DESIGN		

NOT FOR CONSTRUCTION

80% DESIGN REVIEW SEP 19 , 2025

Jacobs
2600 MICHELSON DRIVE, SUITE 600
IRVINE, CA 92612
T: (949) 224-7500
F: (949) 224-7501

REGISTERED PROFESSIONAL ENGINEER MICHAEL S. McAMIS No. 60573 CIVIL STATE OF CALIFORNIA

SCALE: 1"=40'
DRAWN: E. FLORES
CHECKED: G. NGUYEN
DESIGNED: S. MCAMIS
ENGINEER / ARCHITECT

TERMINAL ISLAND MARITIME SUPPORT FACILITY

WATER PLAN - AREA 3

THE PORT OF LOS ANGELES
ENGINEERING DIVISION
425 S. PALOS VERDES STREET SAN PEDRO CA 90731-3309

DRAWING NUMBER 1-3513

SHEET NUMBER W-04

POLAPRD1_042023_BWD

MATCHLINE, SEE DRAWING W-04 FOR CONTINUATION

MATCHLINE, SEE DRAWING W-10 FOR CONTINUATION

MATCHLINE, SEE DRAWING W-06 FOR CONTINUATION

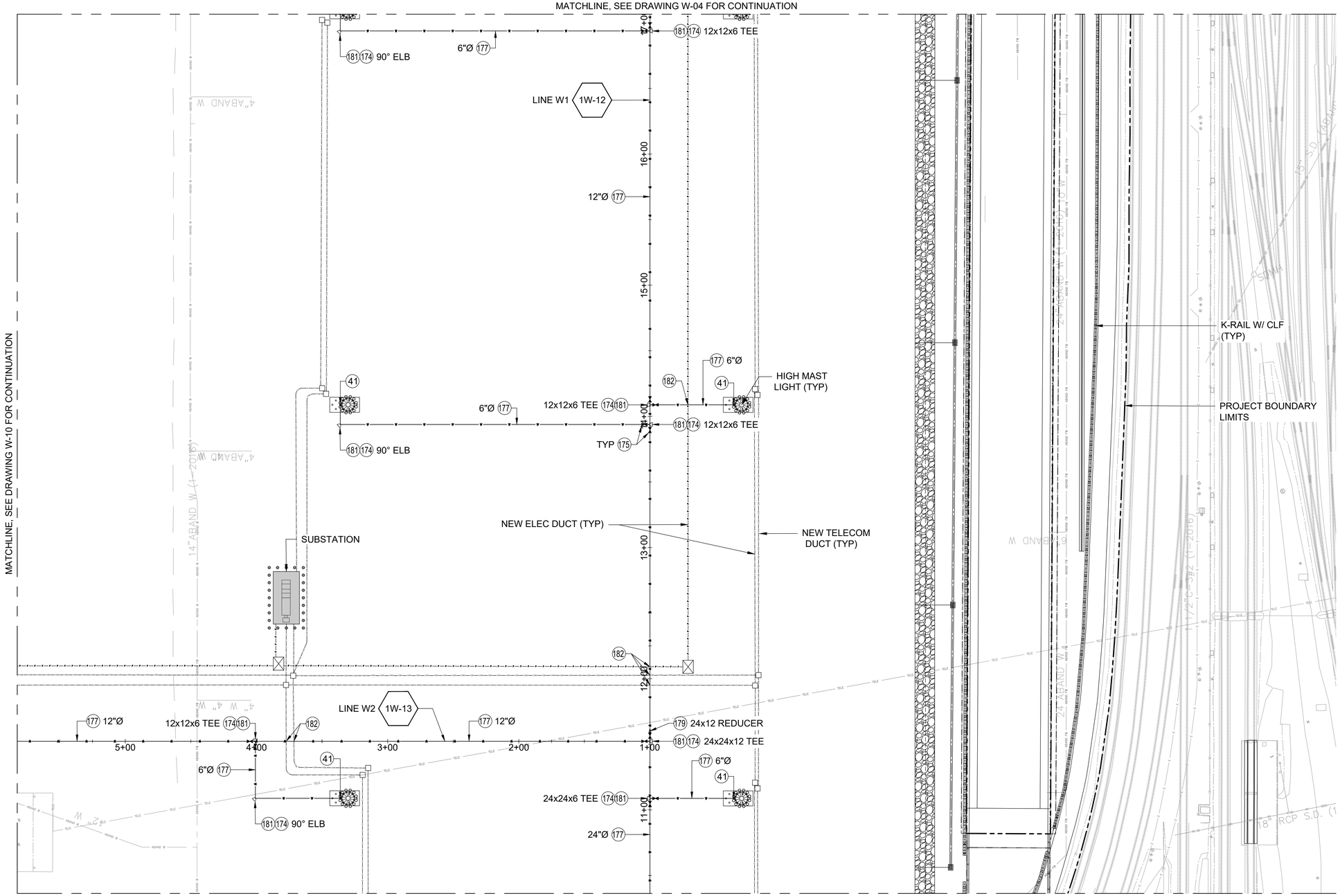

WATER CONSTRUCTION NOTES:

LEGEND OF CONSTRUCTION NOTES		
EXISTING/PROTECT	CONSTRUCT	
No.	CONSTRUCTION ITEM	REFERENCE DWG
41	FIRE HYDRANT	1W-17, 1W-18
171	BACK FLOW PREVENTER	2W-18
172	COPPER PIPE	
174	FITTING	2W-16
175	WATER VALVE	
177	PVC C900 WATER PIPE	
179	REDUCER	
180	STUB OUT FOR FUTURE POC	
181	THRUST BLOCK	1W-16
182	CROSSING	3W-18

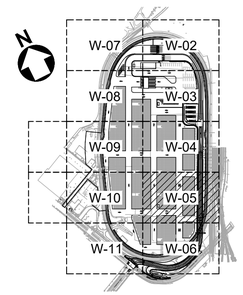

KEY MAP

40' 0' 40' 80'

SCALE: 1" = 40'

1W-05 / W-05 WATER PLAN - AREA 4

SCALE: 1" = 40'

NO.	DATE	DRAWN	REVISIONS -	CHK'D	APP'D
C	7/18/25	-	40% DESIGN		
D	9/19/25	-	80% DESIGN		

NOT FOR CONSTRUCTION

NO.	DATE	DRAWN	REVISIONS -	CHK'D	APP'D

80% DESIGN REVIEW SEP 19 , 2025

Jacobs
2600 MICHELSON DRIVE, SUITE 500
IRVINE, CA 92612
T: (949) 224-7500
F: (949) 224-7501

REGISTERED PROFESSIONAL ENGINEER MICHAEL S. McAMIS No. 60573 CIVIL STATE OF CALIFORNIA

SCALE:	1"=40'
DRAWN:	E. FLORES
CHECKED:	G. NGUYEN
DESIGNED:	S. MCAMIS
	ENGINEER / ARCHITECT

TERMINAL ISLAND MARITIME SUPPORT FACILITY

WATER PLAN - AREA 4

THE PORT OF LOS ANGELES
ENGINEERING DIVISION
425 S. PALOS VERDES STREET SAN PEDRO CA 90731-3309

DRAWING NUMBER	SHEET NUMBER
1-3513	W-05

POLAPR01_043023_BWD

MATCHLINE, SEE DRAWING W-05 FOR CONTINUATION

MATCHLINE, SEE DRAWING W-11 FOR CONTINUATION

NEW ELEC DUCT (TYP)

NEW TELECOM DUCT (TYP)

LINE W1 1W-12

24"Ø (177)

24x24x6 TEE (174)(181) (182)

24x24x24 TEE (181)(174)

24x6 REDUCER (179)

6"Ø (177)

90° ELB (174)(181)

(175) TYP

(41)

HIGH MAST LIGHT (TYP)

K-RAIL W/ CLF (TYP)

PROJECT BOUNDARY LIMITS

TERMINAL ISLAND GRADE SEPARATION (NIC) SEE DRAWING 1-3497

TERMINAL WAY

4+00 5+00 6+00 7+00 8+00 9+00 10+00

12"ABAND W

14"ABAND W (1-2016)

24"ABAND W

REFURBISHED 24"ABAND W (1-2016)

12"C-3#2 (1-2016)

24"RCP (1-2016)

12"C-3#2 (1-2016)

24"RCP (1-2016)

ABAND 8" S SEWER (1-2033 W/S)

WATER (1-2033 W/S)

6" DRAIN (1-2033)

SDMH

1-2"C (1-2001 E/I)

WATER CONSTRUCTION NOTES:

LEGEND OF CONSTRUCTION NOTES

EXISTING/PROTECT ◯ CONSTRUCT

No.	CONSTRUCTION ITEM	REFERENCE DWG
41	FIRE HYDRANT	1W-17, 1W-18
171	BACK FLOW PREVENTER	2W-18
172	COPPER PIPE	
174	FITTING	2W-16
175	WATER VALVE	
177	PVC C900 WATER PIPE	
179	REDUCER	
180	STUB OUT FOR FUTURE POC	
181	THRUST BLOCK	1W-16
182	CROSSING	3W-18

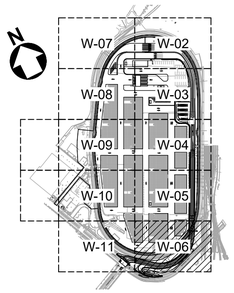

KEY MAP

40' 0' 40' 80'

SCALE: 1" = 40'

1W-06 / W-06 WATER PLAN - AREA 5

SCALE: 1" = 40'

N

NO.	DATE	DRAWN	REVISIONS -	CHK'D	APP'D
C	7/18/25	-	40% DESIGN		
D	9/19/25	-	80% DESIGN		

NOT FOR CONSTRUCTION

NO.	DATE	DRAWN	REVISIONS -	CHK'D	APP'D

80% DESIGN REVIEW SEP 19 , 2025

Jacobs
3600 MICHELSON DRIVE, SUITE 600
IRVINE, CA 92612
T: (949) 224-7500
F: (949) 224-7501

REGISTERED PROFESSIONAL ENGINEER MICHAEL S. MCAMIS No. 60573 CIVIL STATE OF CALIFORNIA

SCALE: 1"=40'
DRAWN: E. FLORES
CHECKED: G. NGUYEN
DESIGNED: S. MCAMIS
ENGINEER / ARCHITECT

TERMINAL ISLAND MARITIME SUPPORT FACILITY

WATER PLAN - AREA 5

THE PORT OF LOS ANGELES
ENGINEERING DIVISION
425 S. PALOS VERDES STREET SAN PEDRO CA 90731-3309

DRAWING NUMBER 1-3513

SHEET NUMBER W-06

POLAFRD1_04/2023_BWD

WATER CONSTRUCTION NOTES:

LEGEND OF CONSTRUCTION NOTES		
EXISTING/PROTECT ⬚		CONSTRUCT ◯
No.	CONSTRUCTION ITEM	REFERENCE DWG
41	FIRE HYDRANT	1W-17, 1W-18
171	BACK FLOW PREVENTER	2W-18
172	COPPER PIPE	
174	FITTING	2W-16
175	WATER VALVE	
177	PVC C900 WATER PIPE	
179	REDUCER	
180	STUB OUT FOR FUTURE POC	
181	THRUST BLOCK	1W-16
182	CROSSING	3W-18

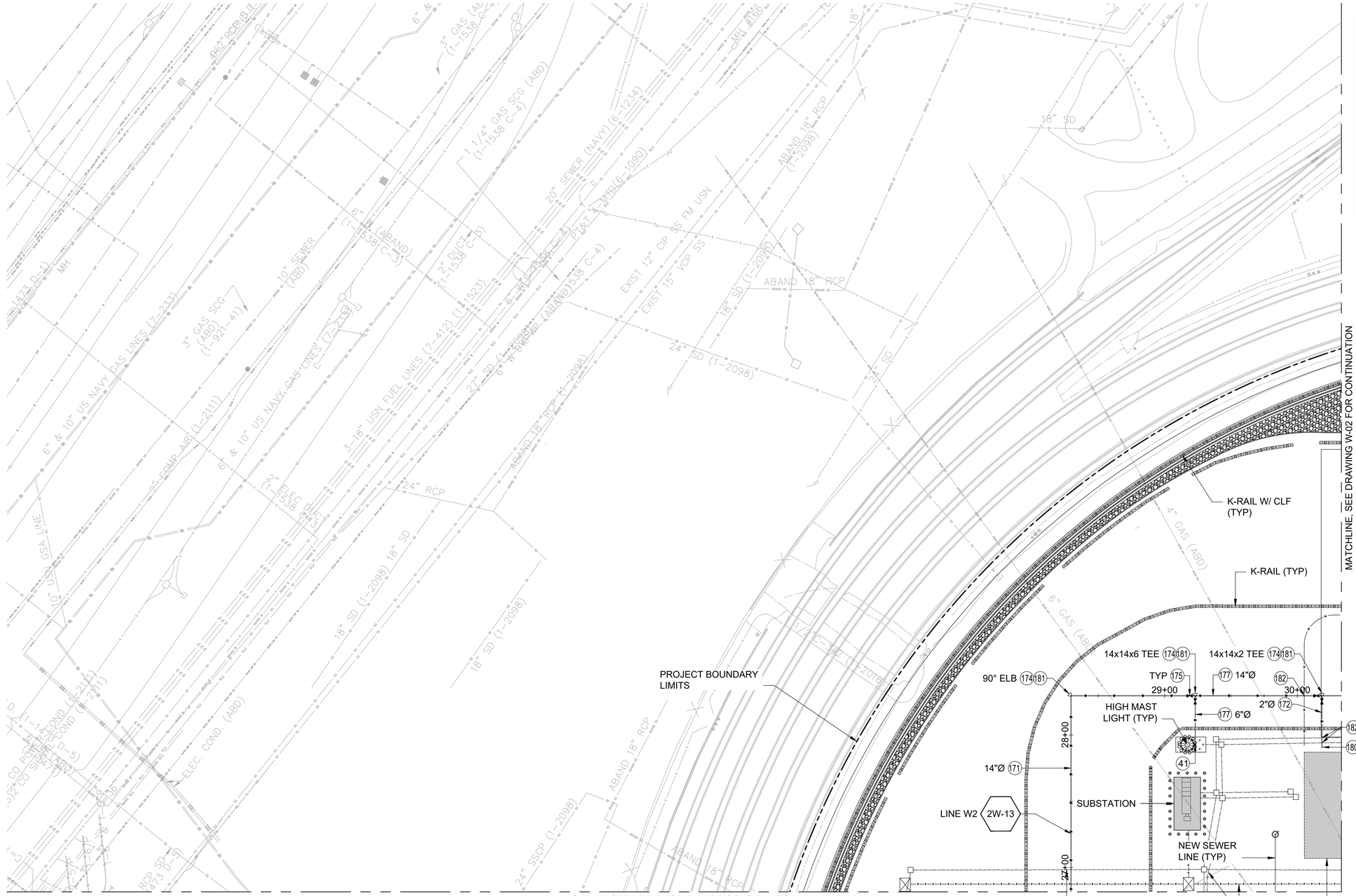

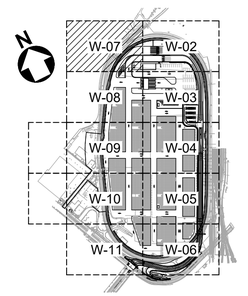

KEY MAP

40' 0' 40' 80'

SCALE: 1" = 40'

1W-07 / W-07 WATER PLAN - AREA 6

SCALE: 1" = 40'

NO.	DATE	DRAWN	REVISIONS -	CHK'D	APP'D
C	7/18/25	-	40% DESIGN		
D	9/19/25	-	80% DESIGN		

NOT FOR CONSTRUCTION

NO.	DATE	DRAWN	REVISIONS -	CHK'D	APP'D
			80% DESIGN REVIEW SEP 19 , 2025		

Jacobs
2600 MICHELSON DRIVE, SUITE 500
IRVINE, CA 92612
T: (949) 224-7500
F: (949) 224-7501

REGISTERED PROFESSIONAL ENGINEER — MICHAEL S. McAMIS — No. 60573 — CIVIL — STATE OF CALIFORNIA

SCALE:	1"=40'
DRAWN:	E. FLORES
CHECKED:	G. NGUYEN
DESIGNED:	S. MCAMIS
	ENGINEER / ARCHITECT

TERMINAL ISLAND MARITIME SUPPORT FACILITY

WATER PLAN - AREA 6

THE PORT OF LOS ANGELES
ENGINEERING DIVISION
425 S. PALOS VERDES STREET SAN PEDRO CA 90731-3309

DRAWING NUMBER	SHEET NUMBER
1-3513	W-07

POLAPRO1_040223_BWD

MATCHLINE, SEE DRAWING W-07 FOR CONTINUATION

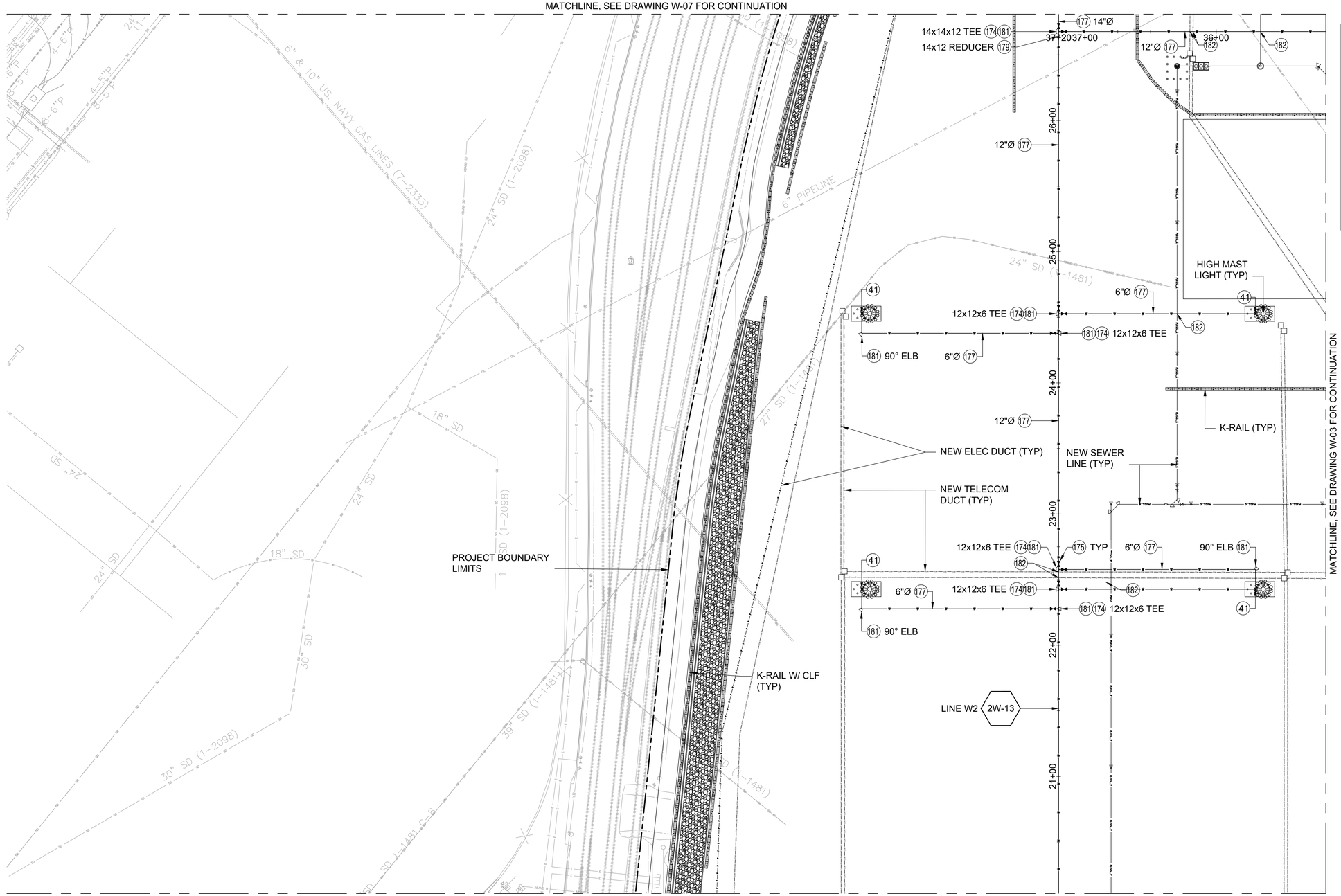

MATCHLINE, SEE DRAWING W-09 FOR CONTINUATION

WATER CONSTRUCTION NOTES:

LEGEND OF CONSTRUCTION NOTES		
☐ EXISTING/PROTECT	◯ CONSTRUCT	
No.	CONSTRUCTION ITEM	REFERENCE DWG
41	FIRE HYDRANT	1W-17, 1W-18
171	BACK FLOW PREVENTER	2W-18
172	COPPER PIPE	
174	FITTING	2W-16
175	WATER VALVE	
177	PVC C900 WATER PIPE	
179	REDUCER	
180	STUB OUT FOR FUTURE POC	
181	THRUST BLOCK	1W-16
182	CROSSING	3W-18

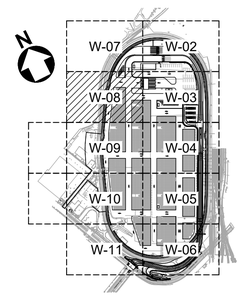

KEY MAP

40' 0' 40' 80'

SCALE: 1" = 40'

1W-08 / W-08 WATER PLAN - AREA 7

SCALE: 1" = 40'

NO.	DATE	DRAWN	REVISIONS -	CHK'D	APP'D
C	7/18/25	-	40% DESIGN		
D	9/19/25	-	80% DESIGN		

NOT FOR CONSTRUCTION

NO.	DATE	DRAWN	REVISIONS -	CHK'D	APP'D
			80% DESIGN REVIEW SEP 19 , 2025		

Jacobs
2600 MICHELSON DRIVE, SUITE 500
IRVINE, CA 92612
T: (949) 224-7500
F: (949) 224-7501

REGISTERED PROFESSIONAL ENGINEER — MICHAEL S. McAMIS — No. 60573 — CIVIL — STATE OF CALIFORNIA

SCALE:	1"=40'
DRAWN:	E. FLORES
CHECKED:	G. NGUYEN
DESIGNED:	S. MCAMIS
	ENGINEER / ARCHITECT

TERMINAL ISLAND MARITIME SUPPORT FACILITY

WATER PLAN - AREA 7

THE PORT OF LOS ANGELES
ENGINEERING DIVISION
425 S. PALOS VERDES STREET SAN PEDRO CA 90731-3309

DRAWING NUMBER	SHEET NUMBER
1-3513	W-08

POLAPRO1_04/2023_BWD

MATCHLINE, SEE DRAWING W-08 FOR CONTINUATION

MATCHLINE, SEE DRAWING SD-12a FOR CONTINUATION

MATCHLINE, SEE DRAWING W-04 FOR CONTINUATION

MATCHLINE, SEE DRAWING W-10 FOR CONTINUATION

PROJECT BOUNDARY LIMITS

NEW ELEC DUCT (TYP)

K-RAIL W/ CLF (TYP)

NEW STORM DRAIN (TYP)

HIGH MAST LIGHT (TYP)

NEW TELECOM DUCT (TYP)

NEW SEWER LINE (TYP)

NEW STORM WATER FILTRATION (TYP)

20+00
19+00
18+00
17+00
16+00
15+00
14+00

41 6"Ø 177 12x12x6 TEE 174 181 182 6"Ø 177 41

181 174 90° ELB

181 174 12x12x6 TEE

12"Ø 177

LINE W2 1W-13

TYP 175

12x12x6 TEE 174 181

6"Ø 177

41

WATER CONSTRUCTION NOTES:

LEGEND OF CONSTRUCTION NOTES

EXISTING/PROTECT ◯ CONSTRUCT

No.	CONSTRUCTION ITEM	REFERENCE DWG
41	FIRE HYDRANT	1W-17, 1W-18
171	BACK FLOW PREVENTER	2W-18
172	COPPER PIPE	
174	FITTING	2W-16
175	WATER VALVE	
177	PVC C900 WATER PIPE	
179	REDUCER	
180	STUB OUT FOR FUTURE POC	
181	THRUST BLOCK	1W-16
182	CROSSING	3W-18

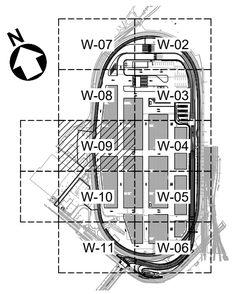

KEY MAP

40' 0' 40' 80'

SCALE: 1" = 40'

1W-09 / W-09 WATER PLAN - AREA 8

SCALE: 1" = 40'

NO.	DATE	DRAWN	REVISIONS -	CHK'D	APP'D
C	7/18/25	-	40% DESIGN		
D	9/19/25	-	80% DESIGN		

NOT FOR CONSTRUCTION

NO.	DATE	DRAWN	REVISIONS -	CHK'D	APP'D

80% DESIGN REVIEW SEP 19 , 2025

Jacobs
2600 MICHELSON DRIVE, SUITE 600
IRVINE, CA 92612
T: (949) 224-7500
F: (949) 224-7501

REGISTERED PROFESSIONAL ENGINEER MICHAEL S. McAMIS No. 60573 CIVIL STATE OF CALIFORNIA

SCALE: 1"=40'
DRAWN: E. FLORES
CHECKED: G. NGUYEN
DESIGNED: S. MCAMIS
ENGINEER / ARCHITECT

TERMINAL ISLAND MARITIME SUPPORT FACILITY

WATER PLAN - AREA 8

THE PORT OF LOS ANGELES
ENGINEERING DIVISION
425 S. PALOS VERDES STREET SAN PEDRO CA 90731-3309

DRAWING NUMBER 1-3513

SHEET NUMBER W-09

POLAPRD1_042023_BWD



WATER CONSTRUCTION NOTES:

LEGEND OF CONSTRUCTION NOTES

EXISTING/PROTECT — CONSTRUCT

No.	CONSTRUCTION ITEM	REFERENCE DWG
41	FIRE HYDRANT	1W-17, 1W-18
171	BACK FLOW PREVENTER	2W-18
172	COPPER PIPE	
174	FITTING	2W-16
175	WATER VALVE	
177	PVC C900 WATER PIPE	
179	REDUCER	
180	STUB OUT FOR FUTURE POC	
181	THRUST BLOCK	1W-16
182	CROSSING	3W-18

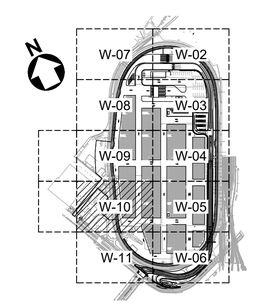

KEY MAP

1W-10 / W-10 WATER PLAN - AREA 9
SCALE: 1" = 40'

40' 0' 40' 80'
SCALE: 1" = 40'

NO.	DATE	DRAWN	REVISIONS -	CHK'D	APP'D
C	7/18/25	-	40% DESIGN		
D	9/19/25	-	80% DESIGN		

NOT FOR CONSTRUCTION

NO.	DATE	DRAWN	REVISIONS -	CHK'D	APP'D

80% DESIGN REVIEW
SEP 19 , 2025

Jacobs
2600 MICHELSON DRIVE, SUITE 500
IRVINE, CA 92612
T: (949) 224-7500
F: (949) 224-7501

REGISTERED PROFESSIONAL ENGINEER
MICHAEL S. McAMIS
No. 60573
CIVIL
STATE OF CALIFORNIA

SCALE: 1"=40'
DRAWN: E. FLORES
CHECKED: G. NGUYEN
DESIGNED: S. MCAMIS
ENGINEER / ARCHITECT

TERMINAL ISLAND MARITIME SUPPORT FACILITY

WATER PLAN - AREA 9

THE PORT OF LOS ANGELES
ENGINEERING DIVISION
425 S. PALOS VERDES STREET SAN PEDRO CA 90731-3309

DRAWING NUMBER 1-3513
SHEET NUMBER W-10

POLAPRO1_04/2023_BWD

MATCHLINE, SEE DRAWING W-10 FOR CONTINUATION

WATER SHUTDOWN LOCATION

K-RAIL (TYP)

NEW ELEC DUCT (TYP)

NEW TELECOM DUCT (TYP)

K-RAIL W/ CLF (TYP)

24x24x6 (174)(181)

(181)(174) 90° ELB

(177) 24"Ø

(182)

1+00 2+00 3+00

(175) TYP

REFURBISHED 24" ABAND W

6"Ø (177)

LINE W1 1W-12

(41) HIGH MAST LIGHT (TYP)

FERRY ST.

PROJECT BOUNDARY LIMITS

MATCHLINE, SEE DRAWING W-06 FOR CONTINUATION

WATER CONSTRUCTION NOTES:

LEGEND OF CONSTRUCTION NOTES

EXISTING/PROTECT ◯ CONSTRUCT

No.	CONSTRUCTION ITEM	REFERENCE DWG
41	FIRE HYDRANT	1W-17, 1W-18
171	BACK FLOW PREVENTER	2W-18
172	COPPER PIPE	
174	FITTING	2W-16
175	WATER VALVE	
177	PVC C900 WATER PIPE	
179	REDUCER	
180	STUB OUT FOR FUTURE POC	
181	THRUST BLOCK	1W-16
182	CROSSING	3W-18

1W-11 / W-11 WATER PLAN - AREA 10

SCALE: 1" = 40'

N

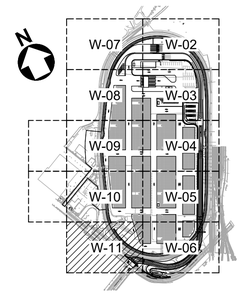

KEY MAP

40' 0' 40' 80'

SCALE: 1" = 40'

NO.	DATE	DRAWN	REVISIONS -	CHK'D	APP'D
C	7/18/25	-	40% DESIGN		
D	9/19/25	-	80% DESIGN		

NOT FOR CONSTRUCTION

NO.	DATE	DRAWN	REVISIONS -	CHK'D	APP'D
			80% DESIGN REVIEW SEP 19 , 2025		

Jacobs
2900 MICHELSON DRIVE, SUITE 500
IRVINE, CA 92612
T: (949) 224-7500
F: (949) 224-7501

REGISTERED PROFESSIONAL ENGINEER — MICHAEL S. MCAMIS — No. 60573 — CIVIL — STATE OF CALIFORNIA

SCALE: 1"=40'
DRAWN: E. FLORES
CHECKED: G. NGUYEN
DESIGNED: S. MCAMIS
ENGINEER / ARCHITECT

TERMINAL ISLAND MARITIME SUPPORT FACILITY

WATER PLAN - AREA 10

THE PORT OF LOS ANGELES
ENGINEERING DIVISION
425 S. PALOS VERDES STREET SAN PEDRO CA 90731-3309

DRAWING NUMBER: 1-3513

SHEET NUMBER: W-11

POLAPRD1_04/2023_BWD

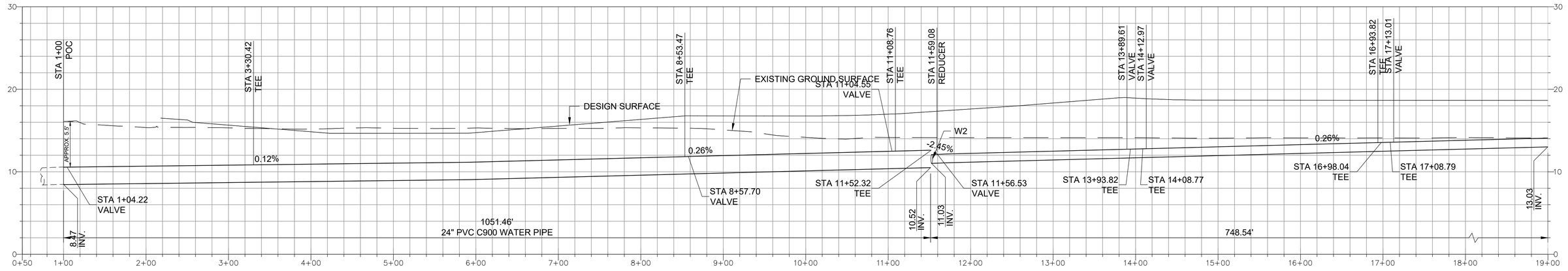

1W-12
W-5
W-6

W1 WATER PROFILE (STA 0+50 TO 19+00)

SCALE: H: 1"=60' , V: 1"=6'

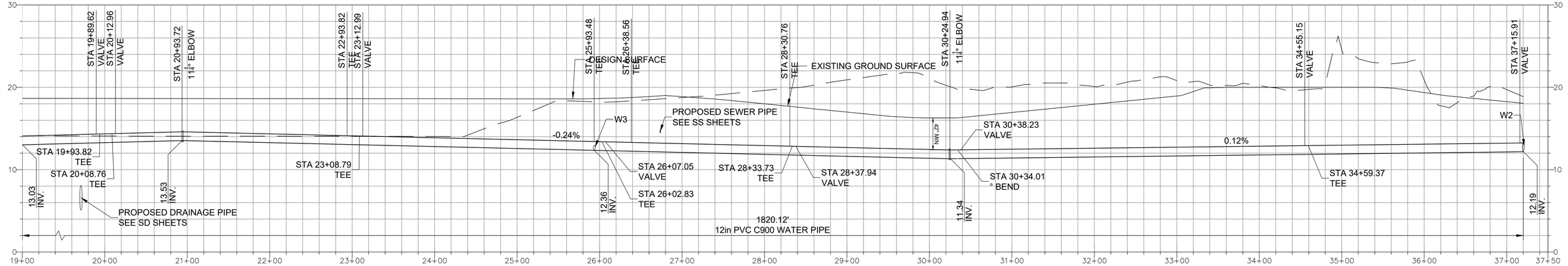

2W-12
W-3
W-4

W1 WATER PROFILE (STA 19+00 TO 37+50)

SCALE: H: 1"=60' , V: 1"=6'

NO.	DATE	DRAWN	REVISIONS -	CHK'D	APP'D
A	9/19/25	-	80% DESIGN		

NOT FOR CONSTRUCTION

NO.	DATE	DRAWN	REVISIONS -	CHK'D	APP'D
			80% DESIGN REVIEW SEP 19 , 2025		

Jacobs
2600 MICHELSON DRIVE, SUITE 500
IRVINE, CA 92612
T: (949) 224-7500
F: (949) 224-7501

REGISTERED PROFESSIONAL ENGINEER
MICHAEL S. McAMIS
No. 60573
CIVIL
STATE OF CALIFORNIA

SCALE:	AS SHOWN
DRAWN:	N. ELSALHAT
CHECKED:	G. NGUYEN
DESIGNED:	S. MCAMIS
	ENGINEER / ARCHITECT

TERMINAL ISLAND MARITIME SUPPORT FACILITY

WATER PROFILE - 1

THE PORT OF LOS ANGELES
ENGINEERING DIVISION
425 S. PALOS VERDES STREET SAN PEDRO CA 90731-3309

DRAWING NUMBER	SHEET NUMBER
1-3513	W-12

POLAPROT_04.0223_BWD

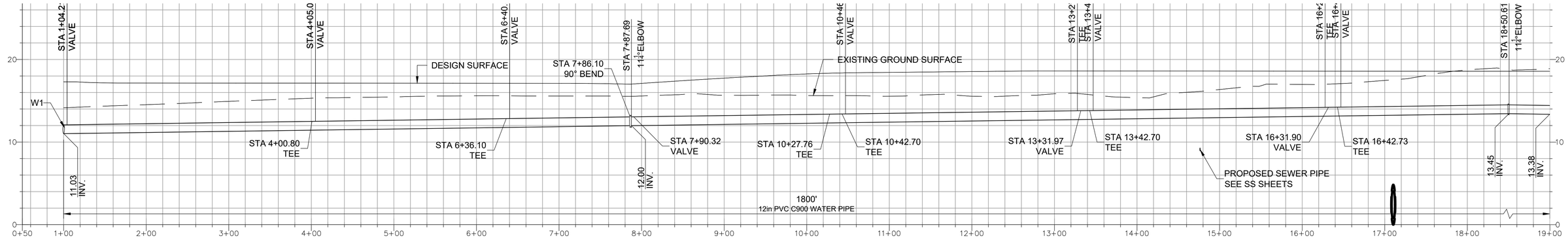

1W-13 / W-7 / W-8 W2 WATER PROFILE (STA 0+00 TO 18+00)

SCALE: H: 1"=60' , V: 1"=6'

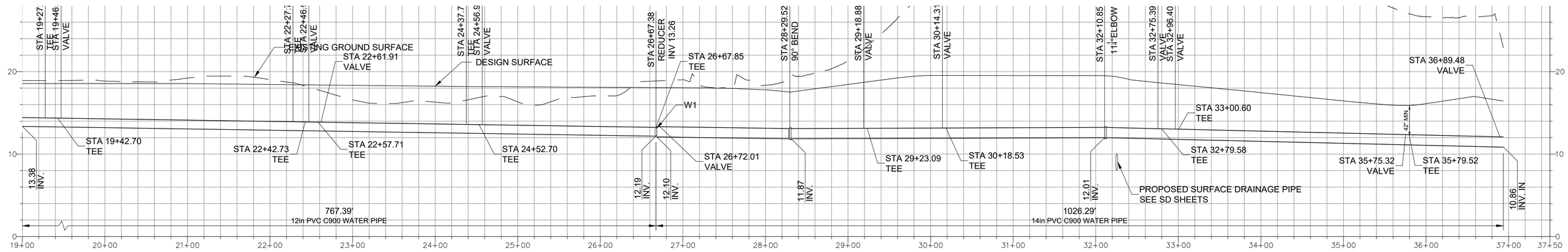

2W-13 / W-9 / W-10 W2 WATER PROFILE (STA 18+00 TO 35+93)

SCALE: H: 1"=60' , V: 1"=6'

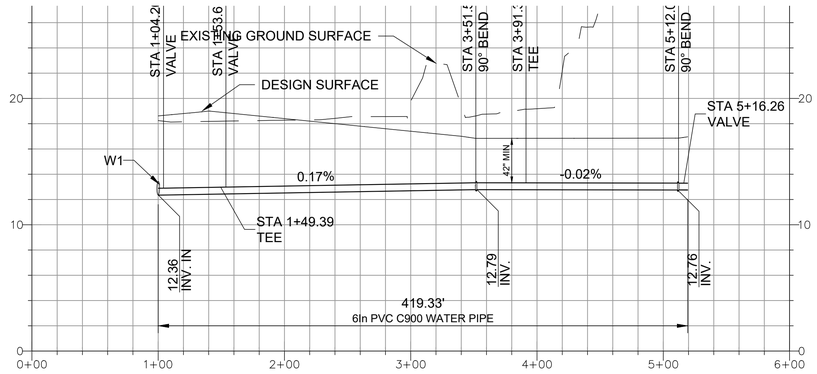

3W-13 / W-3 W3 WATER PROFILE

SCALE: H: 1"=60' , V: 1"=6'

NO.	DATE	DRAWN	REVISIONS -	CHK'D	APP'D
A	9/19/25	-	80% DESIGN		

NOT FOR CONSTRUCTION

NO.	DATE	DRAWN	REVISIONS -	CHK'D	APP'D
			80% DESIGN REVIEW SEP 19 , 2025		

Jacobs
2600 MICHELSON DRIVE, SUITE 500
IRVINE, CA 92612
T: (949) 224-7502
F: (949) 224-7501

REGISTERED PROFESSIONAL ENGINEER
MICHAEL S. MCAMIS
No. 60573
CIVIL
STATE OF CALIFORNIA

SCALE: AS SHOWN
DRAWN: N. ELSALHAT
CHECKED: G. NGUYEN
DESIGNED: S. MCAMIS
ENGINEER / ARCHITECT

TERMINAL ISLAND MARITIME SUPPORT FACILITY

WATER PROFILE - 2

THE PORT OF LOS ANGELES
ENGINEERING DIVISION
425 S. PALOS VERDES STREET SAN PEDRO CA 90731-3309

DRAWING NUMBER: 1-3513
SHEET NUMBER: W-13

POLAPRD1_04/2023_BWD

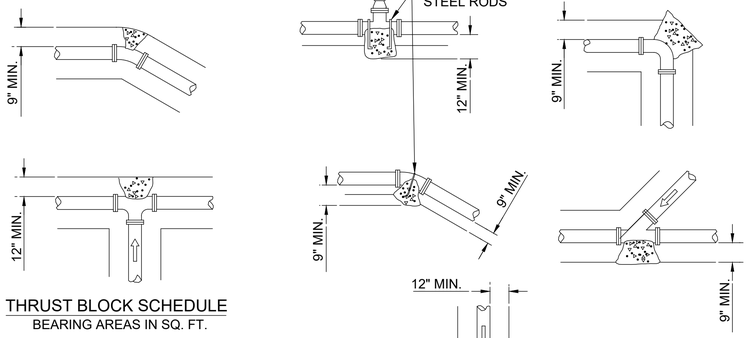

THRUST BLOCK SCHEDULE

BEARING AREAS IN SQ. FT.

TABLE I

PIPE SIZE	90° ELBOW	45° ELBOW	22-1/2° ELBOW	11-1/4° ELBOW	VALVES, TEES & DEAD ENDS
4" & 6"	5.5	3.0	1.5	1.0	3.9
8"	9.3	5.1	2.6	1.5	6.6
10"	15.5	8.4	4.3	2.0	10.9
12"	21.7	11.2	5.6	3.0	15.3
14"	29.0	16.0	9.0	4.0	21.8
16"	42.0	23.0	12.0	6.0	30.0
18"	53.0	29.0	15.0	7.5	37.0
20"	65.0	35.0	18.0	9.0	46.0
24"	75.0	41.0	20.5	10.3	53.0

TABLE II

*** SOIL TYPE	**** MAX. ALLOWABLE SOIL BEARING VALUES	FACTORS FOR INCREASING AREAS IN TABLE I
LOOSE SAND	500 PSF	4
SOFT SANDY CLAY	1000 PSF	2
ADOBE	1000 PSF	2
COMPACT FINE SAND	2000 PSF	1
COMPACT COARSE SAND	2000 PSF	1
MEDIUM STIFF CLAY	2000 PSF	1

NOTES:

1. ABOVE BEARING AREAS ARE BASED ON THE WATER PRESSURE OF 200 P.S.I.
2. ASSUMED BEARING STRENGTH OF SOIL IS 2000 LB./SQ.FT.
3. THRUST BLOCK SHALL BE CONCRETE CLASS 420-B-2000 IN ACCORDANCE WITH REFERENCE SPEC. SECT. 201.1

*** THE CONTRACTOR SHALL BE RESPONSIBLE FOR DETERMINING THE SAFE SOIL BEARING VALUES AND THE POSITION AND SIZE OF BEARING AREAS.

**** BASED ON 2 FEET MINIMUM DEPTH OF COVER OVER THE PIPE.

1W-16 / W-02 - W-11 THRUST BLOCK DETAILS

SCALE: NTS

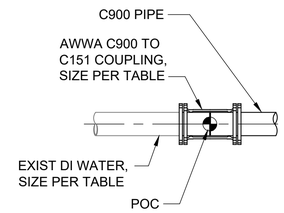

EXIST PIPE SIZE	PROP PIPE SIZE	FITTING COUPLING
14"	14"	14"x14"
24"	24"	24"x24"

2W-16 / W-02 - W-11 PIPE CONNECTION DETAIL FROM EXIST DI PIPE

SCALE: NTS

NO.	DATE	DRAWN	REVISIONS -	CHK'D	APP'D
C	7/18/25	-	40% DESIGN		
D	9/19/25	-	80% DESIGN		

NOT FOR CONSTRUCTION

80% DESIGN REVIEW SEP 19 , 2025

Jacobs
2600 MICHELSON DRIVE, SUITE 500
IRVINE, CA 92612
T: (949) 224-7500
F: (949) 224-7501

REGISTERED PROFESSIONAL ENGINEER MICHAEL S. MCAMIS No. 60573 CIVIL STATE OF CALIFORNIA

SCALE: AS SHOWN
DRAWN: E. FLORES
CHECKED: G. NGUYEN
DESIGNED: S. MCAMIS
ENGINEER / ARCHITECT

TERMINAL ISLAND MARITIME SUPPORT FACILITY

WATER DETAILS

THE PORT OF LOS ANGELES
ENGINEERING DIVISION
425 S. PALOS VERDES STREET SAN PEDRO CA 90731-3309

DRAWING NUMBER 1-3513

SHEET NUMBER W-16

POLAPRO1_04/2023_BWD

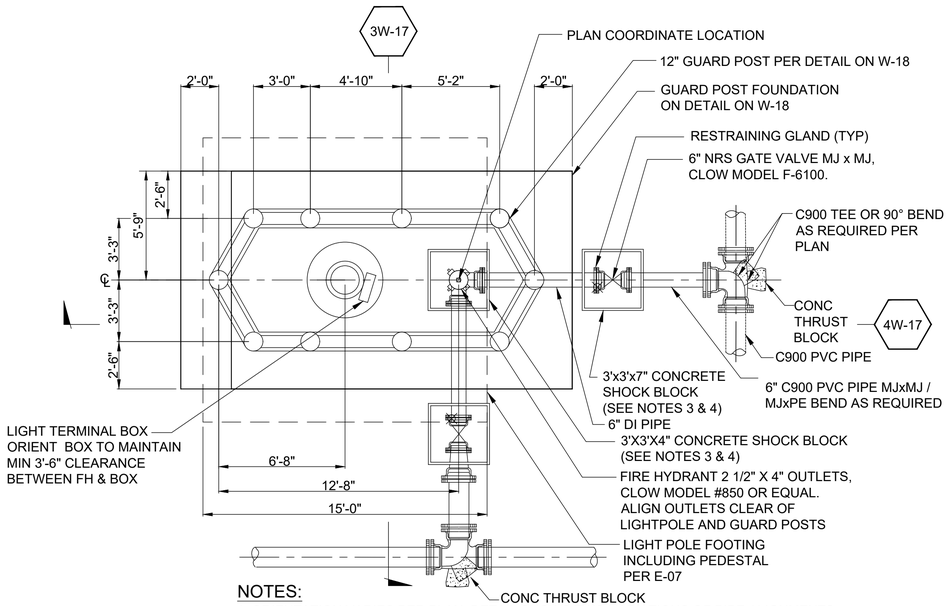

NOTES:
1. ORIENTATION VARIES PER PLAN. DETAIL SHOWS TWO VARIATIONS OF PIPE ALIGNMENTS.
2. MATERIALS INVOLVED ARE IDENTICAL.
3. PAVEMENT THICKNESS SHALL MATCH EXISTING / NEW PAVEMENT.
4. PROVIDE W/ 6/6, W2.9/W2.9 WIRE MESH IN THE MIDDLE OF 3'X3'X7" CONCRETE SHOCK BLOCK

1W-17 / - PLAN-LIGHTPOLE, FIRE HYDRANT AND GUARD POSTS

SCALE: NTS

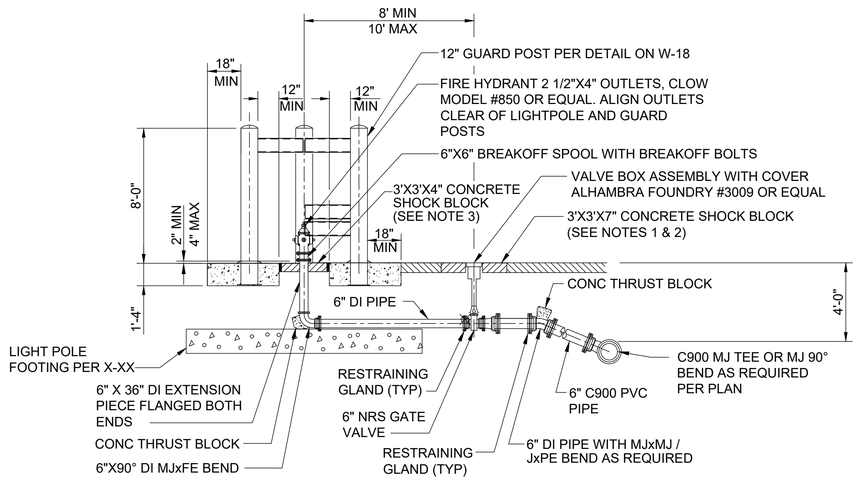

NOTES:
1. PAVEMENT THICKNESS SHALL MATCH EXISTING / NEW PAVEMENT.
2. PROVIDE W/ 6/6, W2.9/W2.9 WIRE MESH IN THE MIDDLE OF 3'X3'X7" CONCRETE SHOCK BLOCK.

3W-17 / - LIGHTPOLE, FIRE HYDRANT AND GUARD POSTS CROSS-SECTION

SCALE: NTS

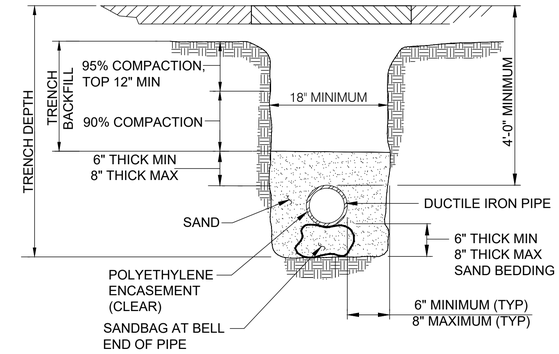

NOTES:
1. REPAIR EXISTING PAVEMENT AFTER PIPING INSTALLATION.E PLAN PAVEMENT TO MATCH THICKNESS OF EXISTING.
2. THIS APPLIES WHERE THERE IS EXISTING PAVEMENT BEFORE PIPING INSTALLATION.

2W-17 / - TYPICAL SECTION-WATER LINE TRENCH

SCALE: NTS

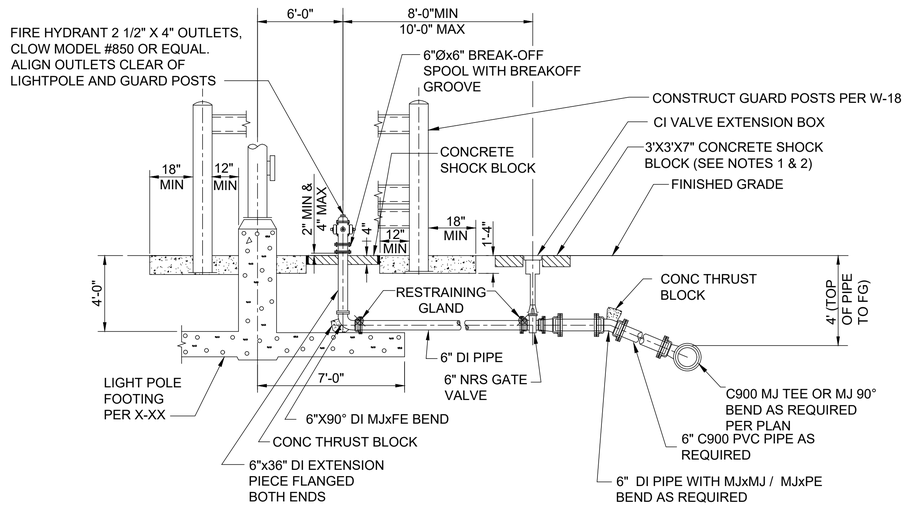

NOTES:
1. PAVEMENT THICKNESS SHALL MATCH EXISTING / NEW PAVEMENT.
2. PROVIDE W/ 6/6, W2.9/W2.9 WIRE MESH IN THE MIDDLE OF 3'X3'X7" CONCRETE SHOCK BLOCK.

4W-17 / - LIGHTPOLE, FIRE HYDRANT AND GUARD POSTS LONGITUDINAL SECTION

SCALE: NTS

NO.	DATE	DRAWN	REVISIONS -	CHK'D	APP'D
C	7/18/25	-	40% DESIGN		
D	9/19/25	-	80% DESIGN		

NOT FOR CONSTRUCTION

NO.	DATE	DRAWN	REVISIONS -	CHK'D	APP'D

80% DESIGN REVIEW SEP 19 , 2025

Jacobs
2600 MICHELSON DRIVE, SUITE 600
IRVINE, CA 92612
T: (949) 224-7500
F: (949) 224-7501

REGISTERED PROFESSIONAL ENGINEER — MICHAEL S. McAMIS — No. 60573 — CIVIL — STATE OF CALIFORNIA

SCALE:	AS SHOWN
DRAWN:	E. FLORES
CHECKED:	G. NGUYEN
DESIGNED:	S. MCAMIS
	ENGINEER / ARCHITECT

TERMINAL ISLAND MARITIME SUPPORT FACILITY

WATER DETAILS

THE PORT OF LOS ANGELES
ENGINEERING DIVISION
425 S. PALOS VERDES STREET SAN PEDRO CA 90731-3309

DRAWING NUMBER	SHEET NUMBER
1-3513	W-17

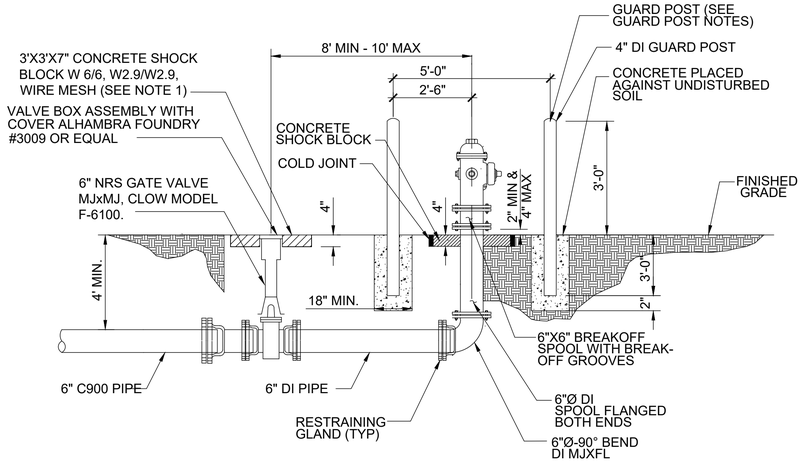

NOTES:
1. CONCRETE FOR SHOCK BLOCKS SHALL BE PROVIDED WITH 6x6, W2.9x2.9 WIRE MESH.
2. THRUST BLOCKS PER DETAIL 1W-16

1W-18 / 1W-17, 3W-17, 4W-17 — DETAIL - FIRE HYDRANT WITH GUARD POSTS
SCALE: NTS

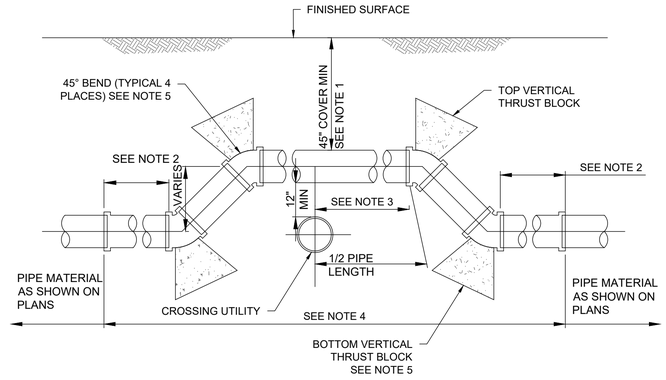

WATERLINE CROSSING OVER UTILITY CONDUITS

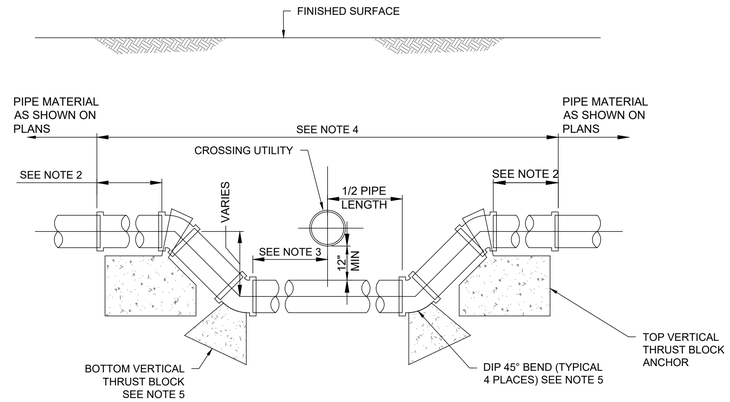

WATERLINE CROSSING UNDER UTILITY CONDUITS

NOTES:

1. WHERE MINIMUM COVER PERMITS, WATERLINE SHALL CROSS OVER SANITARY SEWER OR STORM DRAIN PIPES.
2. SEE SCHEDULE FOR REQUIRED RESTRAINED LENGTHS, 4W-18.
3. 72" MINIMUM FOR CROSSING SANITARY SEWER. 24" MINIMUM FOR OTHER UTILITIES. IF IT NOT POSSIBLE TO OBTAIN THE MINIMUM VERTICAL AND HORIZONTAL SEPARATION BETWEEN WATER AND SEWER PIPELINES AS INDICATED, ONE OF THE FOLLOWING IPE MATERIALS SHALL BE USED FOR THE CROSSING PIPE:
   a. DUCTILE IRON CLASS 350 OR CLASS 54 CML
   b. HIGH DENSITY POLYETHYLENE PIPE (HDPE) WITH BUTT FUSION JOINTS
   c. SOLVENT WELDED PVC PIPE
4. WATER FITTINGS SHALL BE "FIELD LOK" JOINT RESTRAINT GASKETS, MANUFACTURED BY U.S. PIPE OR APPROVED EQUAL.
5. USE #4 STEEL REBAR FOR THRUST BLOCK ANCHOR STRAPS. SEE DETAIL 1W-16 FOR THRUST BLOCK SCHEDULE.
6. 12" MIN CLEARANCE WHEN CROSSING OTHER UTILITIES. PROPER PIPE PROTECTION SHALL BE INSTALLED AS SHOWN ON PLANS WHERE MINIMUM CLEARANCE NOT ACHIEVABLE.

3W-18 / - — WATERLINE CROSSING DETAILS
SCALE: NTS

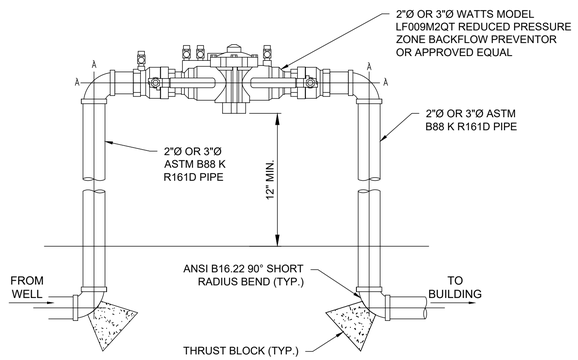

2W-18 / - — REDUCED PRESSURE BACKFLOW PREVENTER DETAIL
SCALE: NTS

FITTING	4"	6"	8"	10"	12"	14"	24"
22.5° ELBOW	18'	18'	18'	18'	18'	18'	18'
45° ELBOW	18'	18'	18'	18'	18'	18'	21'
90° ELBOW	18'	18'	18'	21'	25.5'	30'	50.7'
VALVE & DEAD END	18'	20.7'	31.4'	42.4'	54.3'	66.7'	132.5'
TEE RUNS	18'	18'	18'	18'	18'	22.6'	74.4'
TEE BRANCH	18'	18'	18'	18'	18'	22.6'	74.4'

*STRAIGHT RUN OF PIPE DIRECTLY CONNECTED TO FITTING.

4W-18 / - — RESTRAINED PIPE LENGTH SCHEDULE*
SCALE: NTS

NO.	DATE	DRAWN	REVISIONS -	CHK'D	APP'D
C	7/18/25	-	40% DESIGN		
D	9/19/25	-	80% DESIGN		

NOT FOR CONSTRUCTION

NO.	DATE	DRAWN	REVISIONS -	CHK'D	APP'D
			80% DESIGN REVIEW SEP 19 , 2025		

Jacobs
2600 MICHELSON DRIVE, SUITE 600
IRVINE, CA 92612
T: (949) 224-7500
F: (949) 224-7501

REGISTERED PROFESSIONAL ENGINEER — MICHAEL S. McAMIS — No. 60573 — CIVIL — STATE OF CALIFORNIA

SCALE:	AS SHOWN
DRAWN:	E. FLORES
CHECKED:	G. NGUYEN
DESIGNED:	S. MCAMIS
	ENGINEER / ARCHITECT

TERMINAL ISLAND MARITIME SUPPORT FACILITY

WATER DETAILS

THE PORT OF LOS ANGELES
ENGINEERING DIVISION
425 S. PALOS VERDES STREET SAN PEDRO CA 90731-3309

DRAWING NUMBER	SHEET NUMBER
1-3513	W-18

POLAPRD1_042023_BWD

POINT TABLE		
POINT	NORTHING	EASTING
1	XXXXXXX.XX	XXXXXXX.XX
2	XXXXXXX.XX	XXXXXXX.XX
3	XXXXXXX.XX	XXXXXXX.XX

NO.	DATE	DRAWN	REVISIONS -	CHK'D	APP'D
C	7/18/25	-	40% DESIGN		
D	9/19/25	-	80% DESIGN		

NOT FOR CONSTRUCTION

NO.	DATE	DRAWN	REVISIONS -	CHK'D	APP'D
			80% DESIGN REVIEW SEP 19 , 2025		

Jacobs
3600 MICHELSON DRIVE, SUITE 500
IRVINE, CA 92612
T: (949) 224-7500
F: (949) 224-7501

REGISTERED PROFESSIONAL ENGINEER
MICHAEL S. MCAMIS
No. 60573
CIVIL
STATE OF CALIFORNIA

SCALE: AS SHOWN
DRAWN: E. FLORES
CHECKED: G. NGUYEN
DESIGNED: S. MCAMIS
ENGINEER / ARCHITECT

TERMINAL ISLAND MARITIME SUPPORT FACILITY

WATER COORDINATE POINT TABLE

THE PORT OF LOS ANGELES
ENGINEERING DIVISION
425 S. PALOS VERDES STREET SAN PEDRO CA 90731-3309

DRAWING NUMBER 1-3513

SHEET NUMBER W-21

GENERAL NOTES

1. PROVIDE A LABEL ON EACH LUMINAIRE DENOTING SOURCE PANEL AND CIRCUIT NUMBER.
2. LOCATE EXISTING UTILITIES AND SUBSTRUCTURES PRIOR TO EXCAVATION.
3. ALL WIRES OF 600 VOLT RATING SHALL BE COPPER WITH “THWN/THHN” INSULATION.
4. ALL INSTALLATIONS SHALL COMPLY WITH APPLICABLE SECTIONS OF THE LATEST L.A. CITY ELECTRICAL CODE. HEREAFTER MENTIONED AS “ELECTRICAL CODE”.
5. EQUIPMENT GROUNDING SHALL COMPLY WITH THE ELECTRICAL CODE.
6. ELECTRICAL EQUIPMENT AND DEVICES INSTALLED OUTDOORS SHALL BE ENCLOSED IN WEATHERPROOF, CORROSION RESISTANT, HOT DIPPED GALVANIZED NEMA 3R ENCLOSURES OR AS REQUIRED BY THE SPECIFICATIONS. HARDWARE SHALL BE STAINLESS STEEL UNLESS NOTED OTHERWISE.
7. ALL ELECTRICAL EQUIPMENT AND MATERIALS SHALL BE U.L. LISTED OR CITY OF L.A. TEST LAB APPROVED.
8. UNDERGROUND CONDUIT SHALL BE NON METALLIC SCHEDULE 40 PVC. ALL UNDERGROUND CONDUIT BENDS AND PVC CONDUIT JOINTS SHALL BE NON METALLIC SCHEDULE 80 PVC. THE TERMINATING 10'-0" OF UNDERGROUND CONDUIT, EXCEPT FOR UNDERGROUND CONDUIT ENTERING OR EXITING PRECAST PULL BOX, SHALL BE RIGID GALVANIZED STEEL, WITH 40 MIL BONDED PVC COATING WITH A URETHANE INTERIOR COATING. ALL EXPOSED CONDUIT SHALL BE RIGID GALVANIZED STEEL, UNLESS NOTED OTHERWISE.
9. CONDUIT RUNS ARE SHOWN DIAGRAMMATICALLY. CONTRACTOR SHALL VERIFY THE EXACT CONDUIT ROUTES TO SUIT FIELD CONDITIONS. CONDUITS SHALL BE GROUPED BY ENTITY. SEE SPEC 26 00 01 FOR REQUIREMENTS.
10. ALL WORK AND MATERIALS SHOWN ON THIS PROJECT ARE NEW, UNLESS OTHERWISE NOTED AS EXISTING, OR REUSED, OR REINSTALLED.
11. EMPTY CONDUITS SHALL BE PROVIDED WITH 1/8” DIAMETER NYLON PULL CORD RATED 1250 POUNDS TENSILE STRENGTH. TAG CONDUITS AT EACH END IDENTIFYING THE PURPOSE OF THE CONDUIT AND THE LOCATION OF THE OTHER END. WHEN EMPTY CONDUITS TERMINATE AT PULL BOXES, TIE THE NYLON PULL CORD TO THE PULL BOX PULLING IRON. CONDUITS SHALL BE SUCCESSFULLY MANDRELLED WITH A 12” LONG MANDREL, IN PRESENCE OF THE INSPECTOR. THEN CONTRACTOR SHALL SUBMIT ENGINEERING TEST REPORT.
12. CONTRACTOR SHALL MAINTAIN A MINIMUM CLEARANCE OF 6” WHEN CROSSING ANY SUBSTRUCTURES OR UTILITIES. CONTRACTOR SHALL MAINTAIN A MINIMUM CLEARANCE OF 12" BETWEEN ELECTRICAL CONDUITS AND OTHER CONDUITS INSTALLED PARALLEL IN THE TRENCH. CONDUIT CROSSING THE TRENCH SHALL MAINTAIN A MINIMUM CLEARANCE OF 6-INCH TO THE ELECTRICAL CONDUIT.
13. ALL BURIED UNDERGROUND CONDUIT STUB-OUTS SHALL BE FURNISHED WITH CONCRETE MONUMENTS, 6”X6”X15” DEEP BURIED FLUSH WITH GRADE OVER THE CAPPED ENDS AND A 3” SQ. BRASS PLATE IDENTIFYING THE NUMBER AND SIZE OF CONDUITS, UNLESS OTHERWISE NOTED. SEE DRAWING E-XX.
14. MINIMUM DEPTH OF DIRECT BURIAL AND CONCRETE ENCASED CONDUIT SHALL BE 3'-6” FROM FINISHED SURFACE TO TOP OF CONDUIT(S), UNLESS OTHERWISE NOTED.
15. WHERE CROSSING ANY SUBSTRUCTURES WHICH ARE UNKNOWN IN DEPTH, OR WHERE NEW CONDUITS CROSS EACH OTHER, OR CROSS PIPES, THE ELECTRICAL CONTRACTOR SHALL TRENCH CAREFULLY TO LOCATE ALL SUBSTRUCTURES AT THE CROSSINGS. NEW CONDUITS DEPTH AND INSTALLATIONS SHALL BE PER DRAWING E-28, E-29 AT THESE CROSSINGS EXCEPT WHERE SUBSTRUCTURES OR NEW CONDUITS CROSSING MAKES THIS IMPOSSIBLE. THE ELECTRICAL CONTRACTOR SHALL REROUTE CONDUITS, AT NO ADDITIONAL COST OVER OR UNDER SUBSTRUCTURES AND NEW INTERFERED CONDUITS AND PIPES, WITH A MINIMUM 6” CLEARANCE IN ACCORDANCE WITH THE ELECTRICAL CODE. ELECTRICAL CONTRACTOR SHALL BE RESPONSIBLE TO REPAIR ALL CONDUITS AND WIRES DAMAGED DURING CONSTRUCTION AT NO ADDITIONAL COST . CALL UNDERGROUND SERVICE ALERT (USA) AT 8-1-1 FOR FURTHER INFORMATION REGARDING EXISTING SUBSTRUCTURES, TEN WORKING DAYS PRIOR TO COMMENCING WORK.
16. ALL EXCAVATIONS SHALL BE PROTECTED BY STEEL PLATES AND/OR K RAIL UNTIL BACKFILLING TRENCH TO FINAL GRADE.
17. ALL WORK ON EXISTING ELECTRICAL PANELS AND EQUIPMENT SHALL BE COORDINATED WITH TENANTS, POLA, AND LADWP 14 DAYS IN ADVANCE. CONTRACTOR SHALL REQUEST IN WRITING FOR PERMISSION TO DE-ENERGIZE ANY CIRCUIT OR EQUIPMENT. CONTRACTOR SHALL RECEIVE WRITTEN PERMISSION PRIOR TO PERFORMING THE WORK.
18. THE CONTRACTOR SHALL PROVIDE THE SERVICES OF A PROFESSIONAL ELECTRICAL ENGINEER LICENSED IN CALIFORNIA TO PERFORM AN ARC FLASH STUDY ON ALL NEW & EXISTING PANELS AND SWITCHGEAR OF THE CONSTRUCTED POWER SYSTEM WORK SHOWN HEREIN. CONTRACTOR SHALL SUBMIT A PRELIMINARY STUDY PREPARED WITH POWER SYSTEM COMPUTER SOFTWARE PROGRAM (POWERTOOL FOR WINDOW, ETAP OR AS APPROVED BY ENGINEER) FOR REVIEW INCLUDING SAMPLE ARC FLASH LABEL. CONTRACTOR SHALL SUBMIT FINAL ARC FLASH STUDY INCLUDING LABELS TO THE ENGINEER FOR REVIEW. CONTRACTOR SHALL APPLY ALL APPROVED ARC FLASH LABELS TO INCLUDED EQUIPMENT. SEE SPECIFICATION SECTION 260570 FOR DETAILS.
19. GROUND ALL METAL VERTICAL STRUCTURAL ELEMENTS, FENCES TO GROUNDING SYSTEM PER DETAILS ON SHEET E-XX.
20. CURRENT CARRYING CONDUCTORS INCLUDING BUT NOT LIMITED TO BUS BARS, TRANSFORMER WINDINGS, TERMINATION LUGS , CONDUCTORS AND WIRE SHALL BE COPPER.
21. FOR WORK ASSOCIATED WITH DWP UTILITIES, COORDINATE WITH DWP AND PORT OF LOS ANGELES NINETY (90) DAYS PRIOR TO THE WORK.
22. ELECTRICAL DRAWINGS SHOW GENERAL LOCATIONS OF EQUIPMENT, DEVICES, AND RACEWAY, UNLESS SPECIFICALLY DIMENSIONED. CONTRACTOR SHALL BE RESPONSIBLE FOR ACTUAL LOCATION OF EQUIPMENT AND DEVICES AND FOR PROPER ROUTING AND SUPPORT OF RACEWAYS, SUBJECT TO APPROVAL OF ENGINEER.
23. INSTALL WORK IN ACCORDANCE WITH NECA STANDARD OF INSTALLATION, UNLESS OTHERWISE SPECIFIED.
24. KEEP OPENINGS IN BOXES AND EQUIPMENT CLOSED DURING CONSTRUCTION.
25. LAY OUT WORK CAREFULLY IN ADVANCE. DO NOT CUT OR NOTCH ANY STRUCTURAL MEMBER OR BUILDING SURFACE WITHOUT SPECIFIC APPROVAL OF ENGINEER. CAREFULLY PERFORM CUTTING, CHANNELING, CHASING, OR DRILLING OF FLOORS, WALLS, PARTITIONS, CEILINGS, PAVING, OR OTHER SURFACES REQUIRED FOR THE INSTALLATION, SUPPORT, OR ANCHORAGE OF CONDUIT, RACEWAYS, OR OTHER ELECTRICAL MATERIALS AND EQUIPMENT. FOLLOWING SUCH WORK, RESTORE SURFACES TO ORIGINAL CONDITION.

ABBREVIATIONS

A	AMPERE
AF	AMPERE FRAME
AFF	ABOVE FINISHED FLOOR
AIC	AMPS INTERRUPTING CURRENT
AMP	ALTERNATIVE MARITIME POWER, (SHIP TO SHORE POWER CONNECTION)
AT	AMPERE TRIP
AMH	FIBER OPTIC AND SIGNAL PULL BOX
ANT	ANTENNA
CL	CENTERLINE
C	CONDUIT
CB	CATCH BASIN
C/B	CIRCUIT BREAKER
CCTV	CLOSED CIRCUIT TELEVISION
CFS	CONTAINER FREIGHT STATION
CKT	CIRCUIT
CLR	CLEARANCE
CP	CRANE POWER
CO	CONDUIT ONLY W/NYLON PULL CORD
CU	COPPER
CY	CONTAINER YARD
DN	DATA NETWORK
DSB	DISTRIBUTION SWITCHBOARD
DWG	DRAWING
DWP	DEPARTMENT OF WATER AND POWER
E	ELECTRICAL
EPB	EMERGENCY PUSH BUTTON
E/T	ELECTRICAL AND TELEPHONE
EX, EXIST	EXISTING
F	FUSE
FA	FIRE ALARM
FO	FIBER OPTICS
FIXT	FIXTURE
G	GROUND
GC	GROUND CHECK
GN GND	GREEN GROUND
GR	GROUND RELAY
HMLP	HIGH MAST LIGHT POLE
HPS	HIGH PRESSURE SODIUM
HV	HIGH VOLTAGE
HVMH	HIGH VOLTAGE MAINTENANCE HOLE
LS	LIMIT SWITCH
LT	LIGHTING
LV	LOW VOLTAGE
LVMH	LOW VOLTAGE MAINTENANCE HOLE
MCM	THOUSAND CIRCULAR MILLS
MH	MAINTENANCE HOLE
MS	MAIN SWITCHGEAR
MPC	MINI POWER CENTER
NIC	NOT IN CONTRACT
NTS	NOT TO SCALE
P	POLE
PNL	PANEL
POLA	PORT OF LOS ANGELES
P POLE	POWER POLE
PVC	POLYVINYL CHLORIDE
REG LT	REGULAR LIGHT FIXTURE
RGS	RIGID GALVANIZED STEEL
S	SEWER, SWITCH
SBST	SUBSTATION
SEC LT	SECURITY LIGHT FIXTURE
SG	SIGNAL
S/N	SOLID NEUTRAL
SS	SECURITY SYSTEM
SW	SWITCH
SWGR	SWITCHGEAR
T	TELEPHONE
U/G	UNDERGROUND
UL	UNDERWRITERS LABORATORIES
UON	UNLESS OTHERWISE NOTED
W	WATER, WIRE
WR	WELDING RECEPTACLE
W/	WITH
XFMR	TRANSFORMER

LEGEND

- —— P —— UNDERGROUND DUCTBANK - POWER (ABOVE 600V)
- —— E —— UNDERGROUND DUCTBANK - (600V AND BELOW)
- —— COMM —— UNDERGROUND DUCTBANK - COMMUNICATIONS
- WIRE SIZE #12 UON, MARKS INDICATE NUMBER OF WIRES HOMERUN TO PANEL "P", NUMBER DENOTES CIRCUIT NUMBER
- —— G —— GROUNDING CONDUCTOR IN CONDUIT, UNLESS OTHERWISE NOTED
- UNDERGROUND SCHEDULE 40 PVC CONDUIT, SIZE & WIRE AS NOTED ON PLAN
- CONDUIT RUN , EXPOSED
- EXISTING CONDUIT AND SUBSTRUCTURES
- CONDUIT STUB UP
- GROUND WELL WITH ROD
- GROUND ROD
- GUARD POST
- GUARD POST, REMOVABLE
- CIRCUIT BREAKER (BOLTED TYPE) OR MOLDED CASE. SEE PLAN
- TRANSFORMER WITH SECONDARY GROUNDED
- NEW 100FT HIGH MAST LIGHT POLE WITH (12) DOWN LIGHT FIXTURES, WITH GUARD POSTS, FIRE HYDRANT, AND POLE FOOTING.
- EXISTING ELECTRICAL PULL BOX
- ELECTRICAL PRECAST PULL BOX
- WEATHERPROOF OUTLET, 120V, 20A, GFCI
- SPARE CONDUIT STUBBED AND CAPPED.
- EXISTING HIGH VOLTAGE MAINTENANCE HOLE
- HIGH VOLTAGE MAINTENANCE HOLE
- XXXP — CONDUIT NUMBER "XXXP" , IS SHOWN IN A BUBBLE. IF NO BUBBLE MEANS EQUIPMENT ITEM LABEL.
- $ WEATHERPROOF LIGHT SWITCH
- $4 WEATHERPROOF LIGHT SWITCH, 4-WAY
- $3 WEATHERPROOF LIGHT SWITCH, 3-WAY

- (J) WEATHERPROOF JUNCTION BOX
- (T) THERMOSTAT
- 52 DRAWOUT POWER CIRCUIT BREAKER MEDIUM VOLTAGE
- LOAD BREAK SWITCH - MEDIUM VOLTAGE
- FUSE, CL=CURRENT LIMITING
- CR X CONTROL RELAY, X INDICATES NUMERICAL ORDER IN CIRCUIT
- TDR X TIME DELAY RELAY, X INDICATES NUMERICAL ORDER IN CIRCUIT
- CONTACT - NORMALLY OPEN
- CONTACT - NORMALLY CLOSED
- ON OFF SELECTOR SWITCH, MAINTAINED CONTACT
- THERMOSTAT, CLOSES ON TEMPERATURE RISE
- TIME DELAY CONTACT, CLOSES WHEN ENERGIZED OPENS WHEN DE-ENERGIZED AND TIMEOUT
- G INDICATING LIGHT, PUSH-TO-TEST, LETTER INDICATES COLOR R-RED G-GREEN

NO.	DATE	DRAWN	REVISIONS -	CHK'D	APP'D
A	3/20/25	-	30% CONCEPTUAL DESIGN		
B	4/25/25	-	FINAL CONCEPTUAL DESIGN		
C	7/18/25	-	40% DESIGN		
D	9/19/25	-	80% DESIGN		

NOT FOR CONSTRUCTION

NO.	DATE	DRAWN	REVISIONS -	CHK'D	APP'D

80% DESIGN REVIEW SEP 19 , 2025

Jacobs
2600 MICHELSON DRIVE, SUITE 500
IRVINE, CA 92612
T: (949) 224-7500
F: (949) 224-7501

REGISTERED PROFESSIONAL ENGINEER — SHEET MATHEWS — E 18650 EXP. 12/31/2026 — ELECTRICAL — STATE OF CALIFORNIA

SCALE: AS SHOWN
DRAWN: R. SHARMA
CHECKED: D. WAGNER
DESIGNED: A. MATHEWS
ENGINEER / ARCHITECT

TERMINAL ISLAND MARITIME SUPPORT FACILITY

ELECTRICAL NOTES AND ABBREVIATIONS

THE PORT OF LOS ANGELES
ENGINEERING DIVISION
425 S. PALOS VERDES STREET SAN PEDRO CA 90731-3309

DRAWING NUMBER 1-3513
SHEET NUMBER E-01

POLAPROT_04.0223_BWD

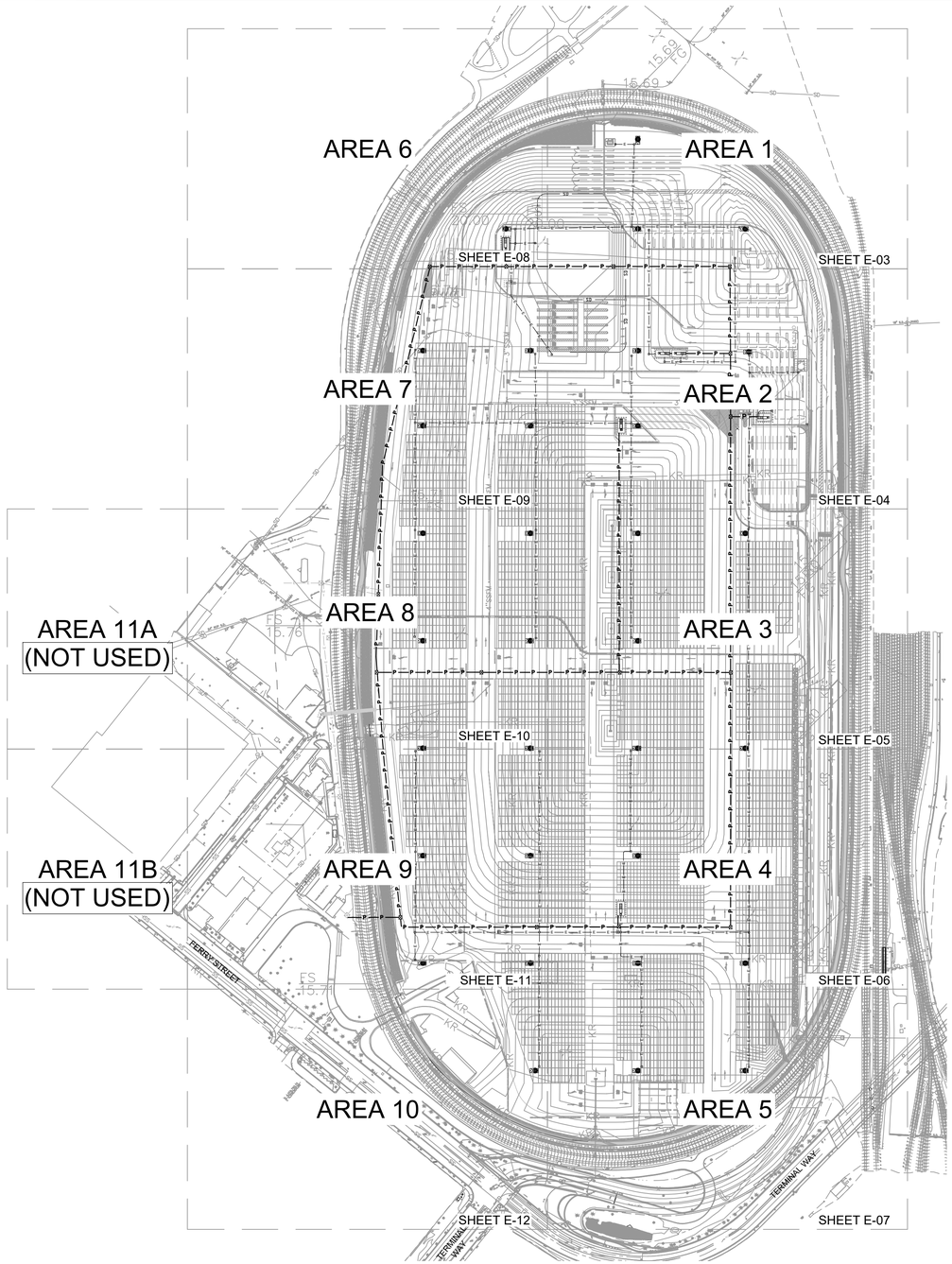

E-02
E-02

PLAN

SCALE: 1" = 200'

ELECTRICAL GENERAL NOTES

1. PROVIDE A LABEL ON EACH PANEL DENOTING SOURCE, VOLTAGE, PANEL, CIRCUIT NUMBER.
2. INSTALLATIONS SHALL COMPLY WITH APPLICABLE SECTIONS OF THE LATEST LA CITY ELECTRICAL CODE, HEREAFTER MENTIONED AS "ELECTRICAL CODE", BASED ON 2023 NATIONAL ELECTRICAL CODE (NEC).
3. ELECTRICAL EQUIPMENT AND DEVICES INSTALLED OUTDOORS SHALL BE ENCLOSED IN WEATHERPROOF, CORROSION RESISTANT, HOT DIPPED GALVANIZED NEMA 3R ENCLOSURES. HARDWARE SHALL BE STAINLESS STEEL, SS316.
4. ELECTRICAL EQUIPMENT AND MATERIALS SHALL BE UL LISTED OR CITY OF LOS ANGELES TEST LAB APPROVED.
5. WIRES SHALL BE COPPER, RATED FOR 600V. FOR WET LOCATION, USE "THWN" INSULATION (75°C WET) FOR WIRES LESS THAN NO 8, AND THWN-2 (90°C WET), FOR WIRES NO 8 AND LARGER. FOR DRY LOCATION, USE THHN INSULATION (90°C DRY)
6. UNDERGROUND CONDUITS BURIED STUB-OUTS SHALL BE FURNISHED WITH CONCRETE MONUMENTS, 6"x6"x6" DEEP BURIED FLUSH WITH GRADE OVER THE CAPPED ENDS AND A 3" SQ BRASS PLATE IDENTIFYING THE NUMBER AND SIZE OF CONDUITS.
7. EMPTY CONDUITS SHALL BE PROVIDED WITH 1/8" DIAMETER NYLON PULL CORD RATED 1250 POUNDS TENSILE STRENGTH. TAG CONDUITS AT EACH END IDENTIFYING THE PURPOSE OF THE CONDUIT AND THE LOCATION OF THE OTHER END. NYLON PULL CORD TO THE PULL BOX PULLING IRON, CONDUITS SHALL BE SUCCESSFULLY MANDRELLED WITH A 12" LONG MANDREL, IN PRESENCE OF THE INSPECTOR.
8. MINIMUM DEPTH OF DIRECT BURIAL AND CONCRETE ENCASED CONDUITS SHALL BE 3'-0" FROM FINISHED SURFACE UNLESS OTHERWISE NOTED.
9. UNDERGROUND CONDUITS SHALL BE RIGID NON-METALLIC CONDUIT (RNC) POLYVINYL CHLORIDE (PVC) SCHEDULE 40. WHEN TRANSITIONING TO ABOVE GROUND, THE TERMINATING 10 FEET OF RIGID NON-METALLIC UNDERGROUND CONDUIT SHALL BE RIGID METAL CONDUIT (RMC) WITH A BONDED 40 MIL PVC COATING. UNDERGROUND CONDUIT BENDS SHALL BE RIGID NON-METALLIC CONDUIT (RNC) POLYVINYL CHLORIDE (PVC) SCHEDULE 40. EXTERIOR EXPOSED CONDUITS SHALL BE RIGID GALVANIZED STEEL AND INTERIOR EXPOSED CONDUITS SHALL BE ELECTRICAL METALLIC TUBING (EMT) UON.
10. WHERE CROSSING ANY SUBSTRUCTURES WHICH ARE UNKNOWN IN DEPTH, OR WHERE NEW CONDUITS CROSS EACH OTHER, OR CROSS PIPES, TRENCH CAREFULLY TO LOCATE SUBSTRUCTURES AT THE CROSSING. NEW CONDUITS DEPTH AND INSTALLATIONS SHALL BE PER DETAIL AT THE CROSSING EXCEPT WHERE SUBSTRUCTURES OR NEW CONDUITS CROSSING MAKE THIS IMPOSSIBLE. REROUTE CONDUITS, OVER OR UNDER SUBSTRUCTURE AND NEW INTERFERED CONDUITS AND PIPES, WITH A MINIMUM 6" CLEARANCE IN ACCORDANCE WITH NEC. REPAIR CONDUITS AND WIRES DAMAGED DURING CONSTRUCTION. CALL UNDERGROUND SERVICE ALERT (USA) FOR FURTHER INFORMATION REGARDING EXISTING SUBSTRUCTURES, TEN WORKING DAYS PRIOR TO COMMENCING WORK.
11. CONDUIT RUNS ARE SHOWN "DIAGRAMMATICALLY", DETERMINE ACTUAL LOCATIONS AND ROUTING IN THE FIELD TO SUIT CONDITIONS.
12. AT THE COMPLETION OF WORK, SUBMIT AN "AS BUILT" DRAWINGS SHOWING THE CHANGES IN WORK OCCURRING DURING THE COURSE OF CONSTRUCTION, AND ACTUAL LOCATIONS OF CONDUIT RUNS.
13. RE-ESTABLISH PAVEMENT MARKINGS AND REPAIR ANY EQUIPMENT AND STRUCTURES DAMAGED BY ANY IMPROVEMENTS FROM THIS PROJECT.
14. TRENCH EXCAVATION SHALL BE COORDINATED WITH THE TENANT 48 HOURS IN ADVANCE. PROTECT EXCAVATIONS AND TRENCHING AGAINST CAVING IN CONFORMANCE WITH "CONSTRUCTION SAFETY ORDERS, DIVISION OF INDUSTRIAL SAFETY, STATE OF CALIFORNIA TITLE 8." PLACE BARRICADES AND INSTALL ADEQUATE WARNING LIGHTS TO PROTECT OPEN EXCAVATION. INSTALL AND MAINTAIN TEMPORARY BRIDGES TO PROVIDE ACCESS TO THE FACILITIES IN THE AREA OF WORK DURING THE TRENCHING OPERATIONS.
15. WORK AND MATERIALS SHOWN ON THIS PROJECT ARE NEW, UNLESS OTHERWISE NOTED AS EXISTING.
16. COORDINATES ARE BASED ON THE NORTH AMERICAN DATUM OF 1983 (NAD 83), CALIFORNIA COORDINATE SYSTEM, ZONE 5, US FEET, 1991.35 EPOCH.
17. COORDINATE WITH LADWP ESR, MICHAEL TOVIAS, AT (310)522-1709 FOR LADWP-RELATED WORK.
18. CONDUITS FROM LIGHT POLE TO PULL BOX SHALL BE A MINIMUM OF 2" FOR ELECTRICAL AND 1" FOR COMMUNICATION, UNLESS OTHERWISE NOTED.
19. REPAIR ANY EQUIPMENT, STRUCTURES AND STRIPING DAMAGED BY TRENCHING OPERATIONS.
20. WIRES SHALL NOT BE SPLICED IN LIGHT POLE.

LEGEND OF CONSTRUCTION NOTES

COORDINATE	
CONSTRUCT	REMODEL EXISTING
EXISTING	REMOVE AND CONSTRUCT
REMOVE	RELOCATE
NOT IN CONTRACT	ABANDON

200' 0' 200' 400'

SCALE: 1" = 200'

NO.	DATE	DRAWN	REVISIONS -	CHK'D	APP'D
A	3/20/25	-	30% CONCEPTUAL DESIGN		
B	4/25/25	-	FINAL CONCEPTUAL DESIGN		
C	7/18/25	-	40% DESIGN		
D	9/19/25	-	80% DESIGN		

NOT FOR CONSTRUCTION

NO.	DATE	DRAWN	REVISIONS -	CHK'D	APP'D
			80% DESIGN REVIEW SEP 19 , 2025		

Jacobs
2600 MICHELSON DRIVE, SUITE 500
IRVINE, CA 92612
T: (949) 224-7500
F: (949) 224-7501

REGISTERED PROFESSIONAL ENGINEER — ABET MATHEWS — E 18650 EXP.12/31/2026 — ELECTRICAL — STATE OF CALIFORNIA

SCALE:	AS SHOWN
DRAWN:	R. SHARMA
CHECKED:	D. WAGNER
DESIGNED:	A. MATHEWS
	ENGINEER / ARCHITECT

TERMINAL ISLAND MARITIME SUPPORT FACILITY

ELECTRICAL KEY PLAN AND NOTES

THE PORT OF LOS ANGELES
ENGINEERING DIVISION
425 S. PALOS VERDES STREET SAN PEDRO CA 90731-3309

DRAWING NUMBER	SHEET NUMBER
1-3513	E-02

POLAPRO1_040223_BWD

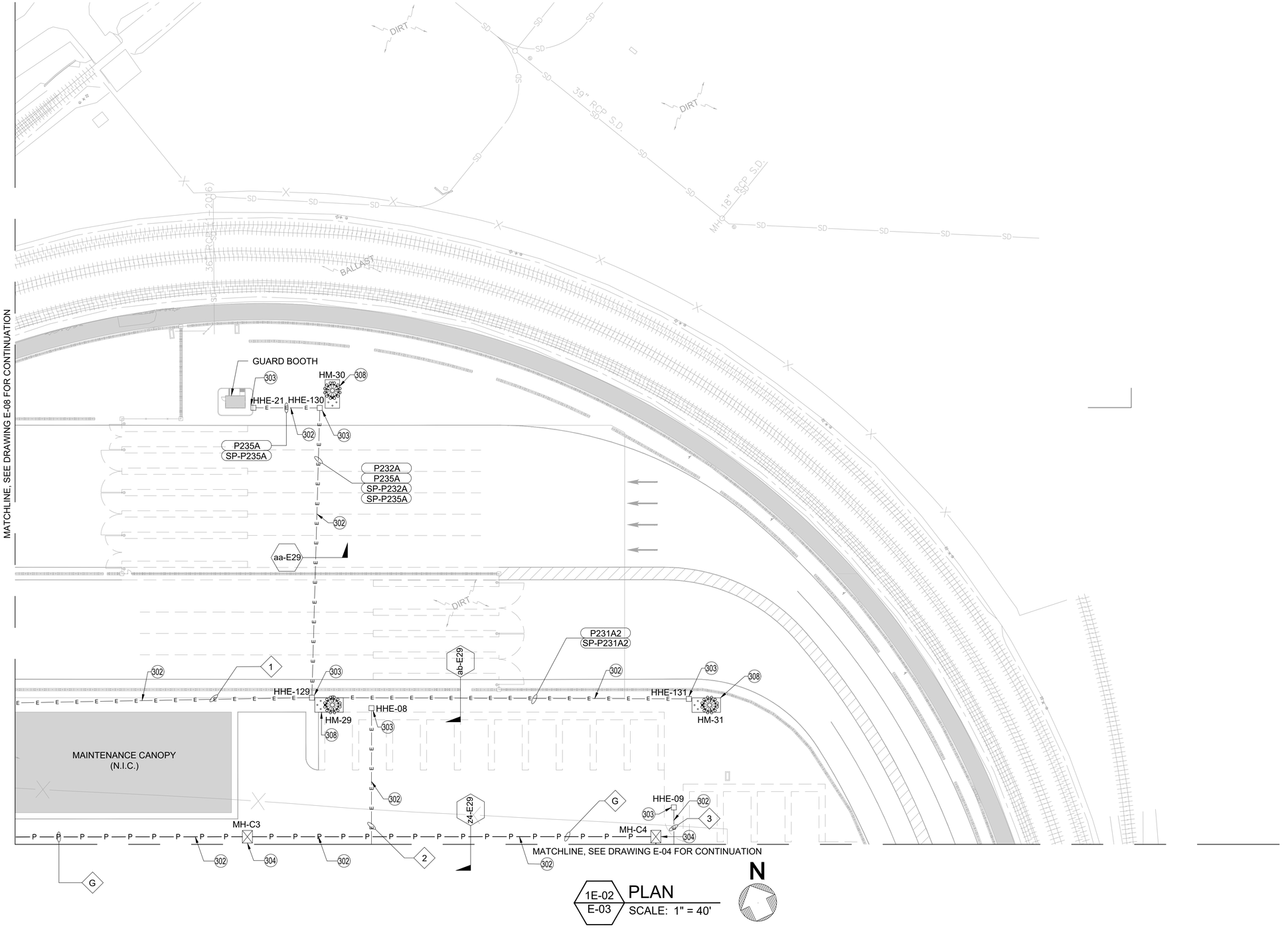

1E-02
E-03
PLAN
SCALE: 1" = 40'

N

No.	CONSTRUCTION ITEM	REFERENCE DWG
302	ELECTRICAL DUCTBANK	E-15, E-28, E-29
303	ELECTRICAL HANDHOLE	
304	ELECTRICAL VAULT/MANHOLE	E-16
308	HIGH MAST LIGHTING	E-17, E-18, E-19

DUCTBANK SCHEDULE (THIS DRAWING)	
DUCTBANK CALLOUT	CONDUIT ID
1	FROM MSB-A TO HHE-12 P232A, P235A, P235B, SP-P232A, SP-P235A, SP-P235B
2	FROM MSB-B TO HHE-08 P225A, P225B, P225C, P225D, P225E, P225F, P225G, SP-P225A, SP-P225B, SP-P225C, SP-P225D, SP-P225E, SP-P225F, SP-P225G
3	FROM MSB-C TO HHE-09 P225H, P225I, P225J, P225K, P225L, P225M, P225N, P225O, SP-P225H, SP-P225I, SP-P225J, SP-P225K, SP-P225L, SP-P225M, SP-P225N, SP-P225O
G	FROM MH-B41 (AREA 2) TO MH-C2 (AREA 6) VIA MH-C4 & MH-C3 (AREA 1) SP-100-A (POWER) , SP-100-B (POWER)

GENERAL NOTES:

1. CONTRACTOR SHALL CORDINATE DEPTH OF DUCTBANKS WITH OTHER SURROUNDING UTILITIES.
2. SEE DRAWINGS E-28 AND E-29 FOR TYPICAL DUCTBANK SECTION.
3. NEW WORK IS SHOWN BOLD.
4. NOT ALL MANHOLES AND PULLBOXES ARE SHOWN. SEE AREA PLANS FOR COMPLETE CONDUCTOR ROUTING DETAILS.

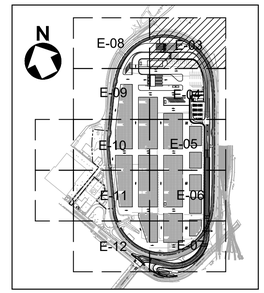

KEY MAP

40' 0' 40' 80'

SCALE: 1" = 40'

NO.	DATE	DRAWN	REVISIONS -	CHK'D	APP'D
A	3/20/25	-	30% CONCEPTUAL DESIGN		
B	4/25/25	-	FINAL CONCEPTUAL DESIGN		
C	7/18/25	-	40% DESIGN		
D	9/19/25	-	80% DESIGN		

NOT FOR CONSTRUCTION

NO.	DATE	DRAWN	REVISIONS -	CHK'D	APP'D

80% DESIGN REVIEW
SEP 19 , 2025

Jacobs
2600 MICHELSON DRIVE, SUITE 500
IRVINE, CA 92612
T - (949) 224-7500
F - (949) 224-7501

REGISTERED PROFESSIONAL ENGINEER
MET MATHEWS
E 18650
EXP. 12/31/2026
ELECTRICAL
STATE OF CALIFORNIA

SCALE:	AS SHOWN
DRAWN:	R. SHARMA
CHECKED:	D. WAGNER
DESIGNED:	A. MATHEWS
	ENGINEER / ARCHITECT

TERMINAL ISLAND MARITIME SUPPORT FACILITY

ELECTRICAL PLAN - AREA 1

THE PORT OF LOS ANGELES
ENGINEERING DIVISION
425 S. PALOS VERDES STREET SAN PEDRO CA 90731-3309

DRAWING NUMBER	SHEET NUMBER
1-3513	E-03

POLAPRO1_040223_BWD

MATCHLINE, SEE DRAWING E-03 FOR CONTINUATION

MATCHLINE, SEE DRAWING E-09 FOR CONTINUATION

ROADABILITY CANOPY

HHE-15

HHE-10

HHE-23

HHE-24

HHE-25

HHE-127

HHE-133

HHE-11

HHE-16

HHE-17

HHE-18

HHE-19

HHE-20

HHE-126

MSB-B

MSB-C

MSB-D

MSB-E

FRONT

HM-27

HM-33

HM-26

MH-B41

MH-B42

RESTROOM

RESTROOM (N.I.C.)

OFFICE (N.I.C.)

DIRT MOUND

SUMP PUMP CONTROL PANEL

(FUTURE) TR-POV-EV

(FUTURE) UNISTRUCT MOUNTED PANEL POV-EV

18" S.D.

P245A SP-P245A

P240A SP-P240A

P241A SP-P241A

P215A SP-P215A

P244A SP-P244A

P242A SP-P242A

X-E28

z5-E29

z3-E29

af-E29

ak-E29

al-E29

am-E29

ag-E29

h-E28

z-E29

s-E29

t-E29

u-E29

d-E28

i-E28

ah-E29

304

302

303

STOP

KR

No.	CONSTRUCTION ITEM	REFERENCE DWG
302	ELECTRICAL DUCTBANK	E-15, E-28, E-29
303	ELECTRICAL HANDHOLE	
304	ELECTRICAL VAULT/MANHOLE	E-16
308	HIGH MAST LIGHTING	E-17, E-18, E-19

DUCTBANK SCHEDULE (THIS DRAWING)

DUCTBANK CALLOUT	
1	FROM MSB-B TO HHE-08 P225A,P225B,P225C,P225D,P225E,P225F,P225G,SP-P225A, SP-P225B,SP-P225C,SP-P225D,SP-P225E,SP-P225F, SP-P225G
2	FROM MSB-C TO HHE-10 P226A,P226B,P226C,P226D,P226E,P226F,P226G,P226H, P225H,P225I,P225J,P225K,P225L,P225M,P225N,P225O, SP-P226A,SP-P226B,SP-P226C,SP-P226D,SP-P226E, SP-P226F,SP-P226G,SP-P226H,SP-P225H,SP-P225I, SP-P225J,SP-P225K,SP-P225L,SP-P225M,SP-P225N, SP-P225O
3	FROM MSB-E TO HHE-06 P210,P211A,P211A1,P211B,P212A,P213A,P213A1,P213B, SP-P210,SP-P211A,SP-P211A1,SP-P211B,SP-P212A, SP-P213A, SP-P213A1,SP-P213B
4	FROM MSB-B TO HHE-25 P225H,P225I,P225J,P225K,P225L,P225M, P225N, P225O,SP-P225H,SP-P225I,SP-P225J,SP-P225K,SP-P225L, SP-P225M,SP-P225N,SP-P225O
5	FROM MSB-B TO HHE-11 P225H,P225I,P225J,P225K,P225L,P225M, P225N, P225O, SP-P225H,SP-P225I,SP-P225J,SP-P225K,SP-P225L, SP-P225M, SP-P225N,SP-P225O FROM MSB-C TO HHE-11 P226A,P226B,P226C,P226D,P226E,P226F,P226G,P226H, P226I,P226J,P226K,P226L,P226M,P226N,P226O,SP-P226A, SP-P226B,SP-P226C,SP-P226D,SP-P226E,SP-P226F, SP-P226G,SP-P226H,SP-P226I,SP-P226J,SP-P226K, SP-P226L,SP-P226M,SP-P226N,SP-P226O
6	FROM MSB-D TO HHE-20 P242A,P243A,SP-P242A, SP-P243A,
7	FROM MSB-D TO HHE-15 P242A,P243A,P240A,P245A,P241A,P246A,P246B,P246C, P246D,P246E,P246F,P246G,P246H,P246I,P246J,P246K, P246L,P246M,P246N,P246O,P246P,SP-P242A,SP-P240A, SP-P245A,SP-P241A,SP-P246A,SP-P246B,SP-P246C, SP-P246D,SP-P246E,SP-P246F,SP-P246G,SP-P246H, SP-P246I,SP-P246J,SP-P246K,SP-P246L,SP-P246M, SP-P246N,SP-P246O,SP-P246P
8	FROM MSB-D TO HHE-16 P246A,P246B,P246C,P246D,P246E,P246F,P246G,P246H, P246I,P246J,P246K,P246L,P246M,P246N,P246O,P246P, P245A,P240A,SP-P246A,SP-P246B,SP-P246C,SP-P246D, SP-P246E,SP-P246F,SP-P246G,SP-P246H,SP-P246I, SP-P246J,SP-P246K,SP-P246L,SP-P246M,SP-P246N, SP-P246O,SP-P246P,SP-P245A,SP-P240A

GENERAL NOTES:

1. CONTRACTOR SHALL CORDINATE DEPTH OF DUCTBANKS WITH OTHER SURROUNDING UTILITIES.
2. SEE DRAWINGS E-28 AND E-29 FOR TYPICAL DUCTBANK SECTION.
3. NEW WORK IS SHOWN BOLD.
4. NOT ALL MANHOLES AND PULLBOXES ARE SHOWN. SEE AREA PLANS FOR COMPLETE CONDUCTOR ROUTING DETAILS.

MATCHLINE, SEE DRAWING E-05 FOR CONTINUATION

2E-02 / E-04 PLAN

SCALE: 1" = 40'

N

E	FROM MH-B42(AREA 2) TO MSB-D (AREA 2) P-104-A, P-104-B, SP-104-A (POWER)
F	FROM MH-B42 (AREA 2) TO MSB-B & MSB-C (AREA 2) VIA MH-B41 (AREA 2) P-101-A, P-101-B, P-105-A, P-105-B, SP-101-A (POWER) SP-105-A (POWER)

G	FROM MH-B41(AREA 2) TO MH-C2 (AREA 6) VIA MH-C4 & MH-C3 (AREA1),SP-100-A (POWER),SP-100-B(POWER)
C	FROM MH-B3 (AREA 3) TO MSB-E (AREA 2)P-138-A,P-138-B, SP-138-A
D	FROM MH-B3 (AREA 3) TO MH-B42(AREA 2) VIA MH-B4 (AREA 3)P-101-A,P-101-B,P-105-A,P-105-B,SP-101-A(POWER) SP-105-A(POWER),P-104-A,P-104-B,SP-104-A(POWER)

KEY MAP

E-09 E-04 E-10 E-05 E-11 E-06 E-12 E-07

40' 0' 40' 80'

SCALE: 1" = 40'

NO.	DATE	DRAWN	REVISIONS -	CHK'D	APP'D
A	3/20/25	-	30% CONCEPTUAL DESIGN		
B	4/25/25	-	FINAL CONCEPTUAL DESIGN		
C	7/18/25	-	40% DESIGN		
D	9/19/25	-	80% DESIGN		

NOT FOR CONSTRUCTION

80% DESIGN REVIEW SEP 19 , 2025

Jacobs
2600 MICHELSON DRIVE, SUITE 500
IRVINE, CA 92612
T: (949) 224-7500
F: (949) 224-7501

REGISTERED PROFESSIONAL ENGINEER — SET MATHEWS — E 18650 EXP. 12/31/2026 — ELECTRICAL — STATE OF CALIFORNIA

SCALE:	AS SHOWN
DRAWN:	R. SHARMA
CHECKED:	D. WAGNER
DESIGNED:	A. MATHEWS
	ENGINEER / ARCHITECT

TERMINAL ISLAND MARITIME SUPPORT FACILITY

ELECTRICAL PLAN - AREA 2

THE PORT OF LOS ANGELES
ENGINEERING DIVISION
425 S. PALOS VERDES STREET SAN PEDRO CA 90731-3309

DRAWING NUMBER: 1-3513

SHEET NUMBER: E-04

POLAPRO1_040223_BWD

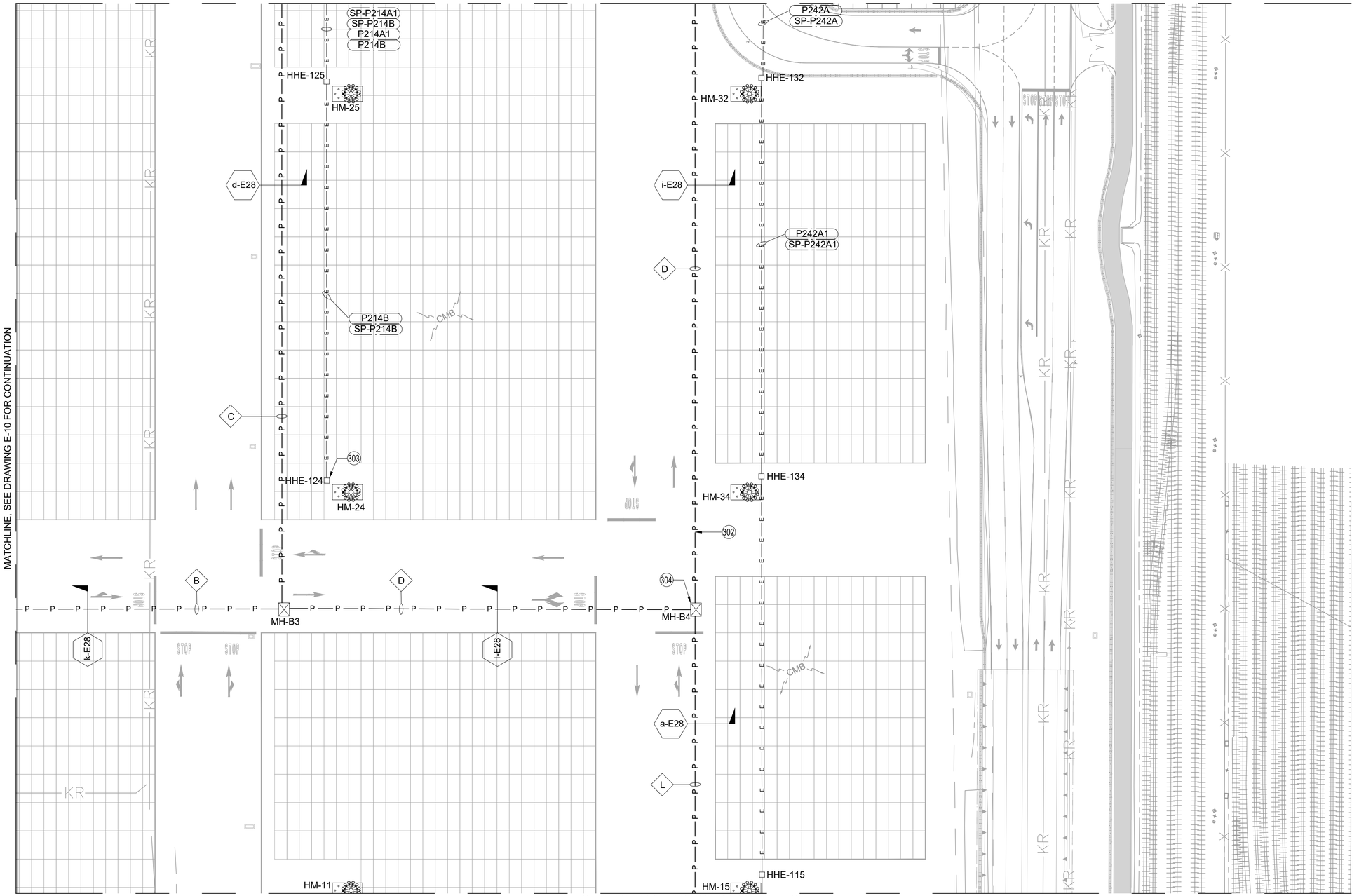

No.	CONSTRUCTION ITEM	REFERENCE DWG
302	ELECTRICAL DUCTBANK	E-15, E-28, E-29
303	ELECTRICAL HANDHOLE	
304	ELECTRICAL VAULT/MANHOLE	E-16
308	HIGH MAST LIGHTING	E-17, E-18, E-19

DUCTBANK SCHEDULE (THIS DRAWING)	
DUCTBAKNK CALLOUT	CONDUIT ID
B	FROM MH-CO (AREA 8) TO MH-B3 (AREA 3) VIA MH-B1 & MH-B2 (AREA 8) P-101-A, P-101-B, P-105-A, P-105-B, SP-101-A (POWER), SP-105-A (POWER), P-104-A, P-104-B, SP-104-A (POWER), P-138-A, P-138-B, SP-138-A
C	FROM MH-B3 (AREA 3) TO MSB-E (AREA 2) P-138-A, P-138-B, SP-138-A
D	FROM MH-B3 (AREA 3) TO MH-B42 (AREA 2) VIA MH-B4 (AREA 3) P-101-A, P-101-B, P-105-A, P-105-B, SP-101-A (POWER), SP-105-A (POWER), P-104-A, P-104-B, SP-104-A (POWER)
L	FROM MH-B4 (AREA 3) TO MH-A3 (AREA 4) VIA MH-A4 (AREA 4) SP-100-C (POWER), SP-100-D (POWER)

GENERAL NOTES:

1. CONTRACTOR SHALL CORDINATE DEPTH OF DUCTBANKS WITH OTHER SURROUNDING UTILITIES.
2. SEE DRAWINGS E-28 AND E-29 FOR TYPICAL DUCTBANK SECTION.
3. NEW WORK IS SHOWN BOLD.
4. NOT ALL MANHOLES AND PULLBOXES ARE SHOWN. SEE AREA PLANS FOR COMPLETE CONDUCTOR ROUTING DETAILS.

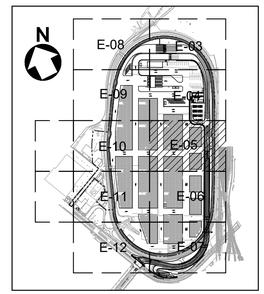

KEY MAP

40' 0' 40' 80'

SCALE: 1" = 40'

3E-02 / E-05 PLAN

SCALE: 1" = 40'

N

NO.	DATE	DRAWN	REVISIONS -	CHK'D	APP'D
A	3/20/25	-	30% CONCEPTUAL DESIGN		
B	4/25/25	-	FINAL CONCEPTUAL DESIGN		
C	7/18/25	-	40% DESIGN		
D	9/19/25	-	80% DESIGN		

NOT FOR CONSTRUCTION

NO.	DATE	DRAWN	REVISIONS -	CHK'D	APP'D
			80% DESIGN REVIEW SEP 19 , 2025		

Jacobs
3600 MICHELSON DRIVE, SUITE 500
IRVINE, CA 92612
T (949) 224-7500
F (949) 224-7501

REGISTERED PROFESSIONAL ENGINEER
ALBERT MATHEWS
E 18650
EXP. 12/31/2026
ELECTRICAL
STATE OF CALIFORNIA

SCALE: AS SHOWN
DRAWN: R. SHARMA
CHECKED: D. WAGNER
DESIGNED: A. MATHEWS
ENGINEER / ARCHITECT

TERMINAL ISLAND MARITIME SUPPORT FACILITY

ELECTRICAL PLAN - AREA 3

THE PORT OF LOS ANGELES
ENGINEERING DIVISION
425 S. PALOS VERDES STREET SAN PEDRO CA 90731-3309

DRAWING NUMBER: 1-3513
SHEET NUMBER: E-05

POLAPR01_040223_BWD

MATCHLINE, SEE DRAWING E-05 FOR CONTINUATION

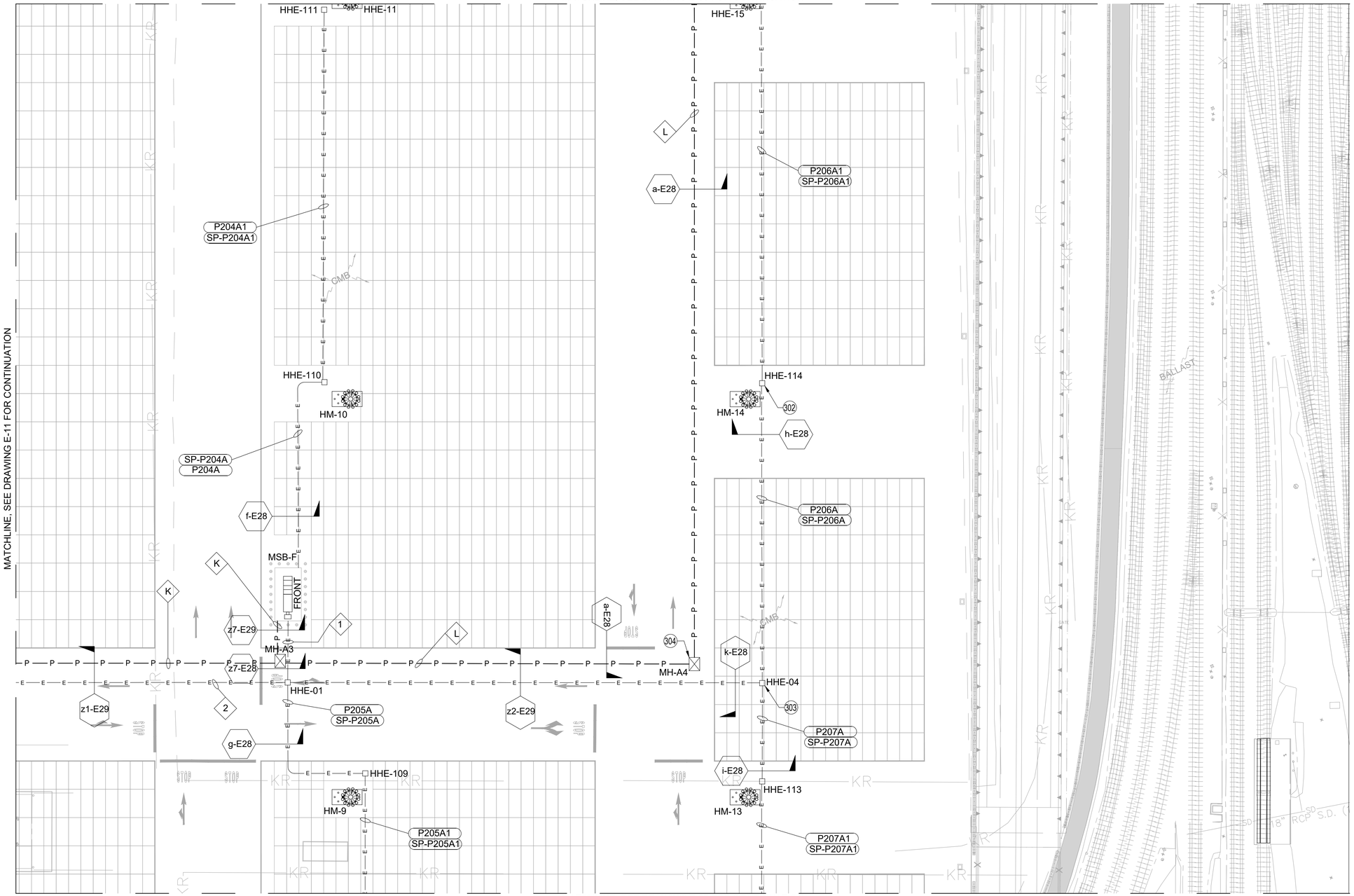

MATCHLINE, SEE DRAWING E-11 FOR CONTINUATION

MATCHLINE, SEE DRAWING E-07 FOR CONTINUATION

No.	CONSTRUCTION ITEM	REFERENCE DWG
302	ELECTRICAL DUCTBANK	E-15, E-28, E-29
303	ELECTRICAL HANDHOLE	
304	ELECTRICAL VAULT/MANHOLE	E-16
308	HIGH MAST LIGHTING	E-17, E-18, E-19

DUCTBANK SCHEDULE (THIS DRAWING)	
DUCTBANK CALLOUT	CONDUIT ID
1	FROM MSB-F to HHE-1: P200A, P201A, P202A, P203A, P205A, P206A, P207A, SP-P200A, SP-P201A, SP-P202A, SP-P203A, SP-P205A, SP-P206A, SP-P207A
2	FROM MSB-F to HHE-2: P200A, P201A, P202A, P203A, SP-P200A, SP-P201A, SP-P202A, SP-P203A
K	FROM MH-A1 (AREA 9) TO MSB-F (AREA 4) VIA MH-A2 (AREA 9) & MH-A3 (AREA 4) P-103-A, P-103-B, SP-103-A(POWER), SP-100-E (POWER)
L	FROM MH-B4 (AREA 3) TO MH-A3 (AREA 4) VIA MH-A4 (AREA 4) SP-100-C (POWER), SP-100-D (POWER)

GENERAL NOTES:

1. CONTRACTOR SHALL CORDINATE DEPTH OF DUCTBANKS WITH OTHER SURROUNDING UTILITIES.
2. SEE DRAWINGS E-28 AND E-29 FOR TYPICAL DUCTBANK SECTION.
3. NEW WORK IS SHOWN BOLD.
4. NOT ALL MANHOLES AND PULLBOXES ARE SHOWN. SEE AREA PLANS FOR COMPLETE CONDUCTOR ROUTING DETAILS.

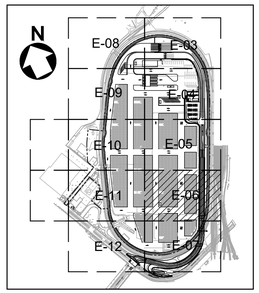

KEY MAP

40' 0' 40' 80'

SCALE: 1" = 40'

4E-02 / E-06 PLAN

SCALE: 1" = 40'

N

NO.	DATE	DRAWN	REVISIONS -	CHK'D	APP'D
A	3/20/25	-	30% CONCEPTUAL DESIGN		
B	4/25/25	-	FINAL CONCEPTUAL DESIGN		
C	7/18/25	-	40% DESIGN		
D	9/19/25	-	80% DESIGN		

NOT FOR CONSTRUCTION

NO.	DATE	DRAWN	REVISIONS -	CHK'D	APP'D
			80% DESIGN REVIEW SEP 19 , 2025		

Jacobs
2600 MICHELSON DRIVE, SUITE 500
IRVINE, CA 92612
T: (949) 224-7500
F: (949) 224-7501

REGISTERED PROFESSIONAL ENGINEER — MATTHEW S. MATHEWS — E 18650 EXP. 12/31/2026 — ELECTRICAL — STATE OF CALIFORNIA

SCALE:	AS SHOWN
DRAWN:	R. SHARMA
CHECKED:	D. WAGNER
DESIGNED:	A. MATHEWS
	ENGINEER / ARCHITECT

TERMINAL ISLAND MARITIME SUPPORT FACILITY

ELECTRICAL PLAN - AREA 4

THE PORT OF LOS ANGELES
ENGINEERING DIVISION
425 S. PALOS VERDES STREET SAN PEDRO CA 90731-3309

DRAWING NUMBER: 1-3513

SHEET NUMBER: E-06

POLAPROT_040223_BWD

MATCHLINE, SEE DRAWING E-06 FOR CONTINUATION

MATCHLINE, SEE DRAWING E-12 FOR CONTINUATION

P205A1
SP-P205A1
302
HHE-108
HM-8
P207A1
SP-P207A1
303
HHE-112
HM-12
CMB
KR
CNC
AC
SD
24" RCP
60" RCP
18" RCP
STATE

No.	CONSTRUCTION ITEM	REFERENCE DWG
302	ELECTRICAL DUCTBANK	E-15, E-28, E-29
303	ELECTRICAL HANDHOLE	
304	ELECTRICAL VAULT/MANHOLE	E-16
308	HIGH MAST LIGHTING	E-17, E-18, E-19

GENERAL NOTES:

1. CONTRACTOR SHALL CORDINATE DEPTH OF DUCTBANKS WITH OTHER SURROUNDING UTILITIES.
2. SEE DRAWINGS E-28 AND E-29 FOR TYPICAL DUCTBANK SECTION.
3. NEW WORK IS SHOWN BOLD.
4. NOT ALL MANHOLES AND PULLBOXES ARE SHOWN. SEE AREA PLANS FOR COMPLETE CONDUCTOR ROUTING DETAILS.

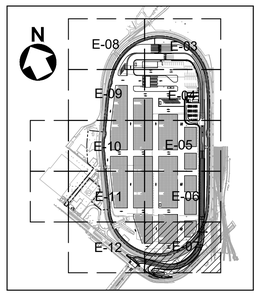

KEY MAP

40' 0' 40' 80'

SCALE: 1" = 40'

5E-02
E-07

PLAN

SCALE: 1" = 40'

N

NO.	DATE	DRAWN	REVISIONS -	CHK'D	APP'D
A	3/20/25	-	30% CONCEPTUAL DESIGN		
B	4/25/25	-	FINAL CONCEPTUAL DESIGN		
C	7/18/25	-	40% DESIGN		
D	9/19/25	-	80% DESIGN		

NOT FOR CONSTRUCTION

NO.	DATE	DRAWN	REVISIONS -	CHK'D	APP'D
			80% DESIGN REVIEW SEP 19 , 2025		

Jacobs
2600 MICHELSON DRIVE, SUITE 500
IRVINE, CA 92612
T: (949) 224-7500
F: (949) 224-7501

REGISTERED PROFESSIONAL ENGINEER
MATTHEW S. MATHEWS
E 18550
EXP. 12/31/2026
ELECTRICAL
STATE OF CALIFORNIA

SCALE: AS SHOWN
DRAWN: R. SHARMA
CHECKED: D. WAGNER
DESIGNED: A. MATHEWS
ENGINEER / ARCHITECT

TERMINAL ISLAND MARITIME SUPPORT FACILITY

ELECTRICAL PLAN - AREA 5

THE PORT OF LOS ANGELES
ENGINEERING DIVISION
425 S. PALOS VERDES STREET SAN PEDRO CA 90731-3309

DRAWING NUMBER 1-3513

SHEET NUMBER E-07

No.	CONSTRUCTION ITEM	REFERENCE DWG
302	ELECTRICAL DUCTBANK	E-17, E-28, E-29
303	ELECTRICAL HANDHOLE	
304	ELECTRICAL VAULT/MANHOLE	E-16
308	HIGH MAST LIGHTING	E-17, E-18, E-19

DUCTBANK SCHEDULE (THIS DRAWING)	
DUCTBANK CALLOUT	CONDUIT ID
1	FROM MSB-A TO HHE-27 P234A, P231A, P232A, P235A, P235B, P233A, P233B, P233C, P233D, P233E, P233F, P233G, SP-P234A, SP-P231A, SP-P232A, SP-P235A, SP-P235B, SP-P233A, SP-P233B, SP-P233C, SP-P233D, SP-P233E, SP-P233F, SP-P233G
2	FROM MSB-A TO HHE-12 P232A, P235A, P235B, SP-P232A, SP-P235A, SP-P235B
3	FROM MSB-A TO HHE-14 P233A, P233B, P233C, P233D, P233E, P233F,P233G, SP-P233A, SP-P233B, SP-P233C, SP-P233D, SP-P233E, SP-P233F, SP-P233G
G	FROM MH-B41 (AREA 2) TO MH-C2 (AREA 6) VIA MH-C4 & MH-C3 (AREA 1) SP-100-A (POWER) , SP-100-B (POWER)
H	FROM MH-C0 (AREA-8) TO MSB-A (AREA-6) VIA MH-C1,C2(AREA 6) P-102-A,P-102-B, SP-102-A(POWER),SP-100-F (POWER)

GENERAL NOTES:

1. CONTRACTOR SHALL CORDINATE DEPTH OF DUCTBANKS WITH OTHER SURROUNDING UTILITIES.
2. SEE DRAWINGS E-28 AND E-29 FOR TYPICAL DUCTBANK SECTION.
3. NEW WORK IS SHOWN BOLD.
4. NOT ALL MANHOLES AND PULLBOXES ARE SHOWN. SEE AREA PLANS FOR COMPLETE CONDUCTOR ROUTING DETAILS.

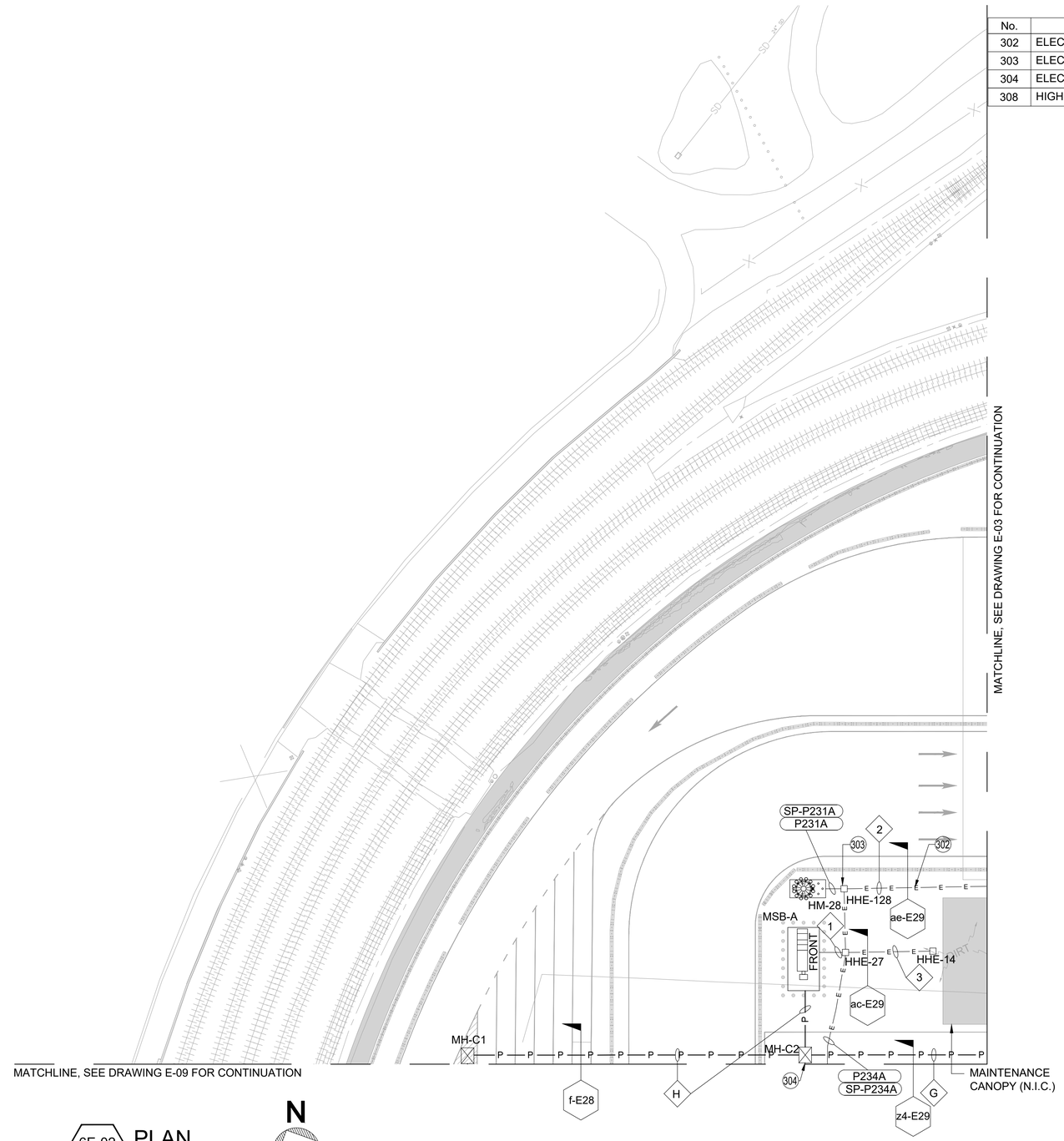

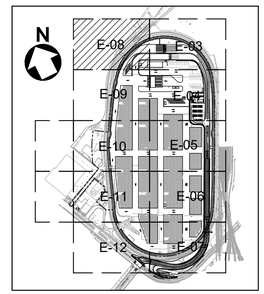

KEY MAP

40' 0' 40' 80'

SCALE: 1" = 40'

6E-02 / E-08 PLAN

SCALE: 1" = 40'

N

NO.	DATE	DRAWN	REVISIONS -	CHK'D	APP'D
A	3/20/25	-	30% CONCEPTUAL DESIGN		
B	4/25/25	-	FINAL CONCEPTUAL DESIGN		
C	7/18/25	-	40% DESIGN		
D	9/19/25	-	80% DESIGN		

NOT FOR CONSTRUCTION

80% DESIGN REVIEW
SEP 19 , 2025

Jacobs
2600 MICHELSON DRIVE, SUITE 500
IRVINE, CA 92612
T: (949) 224-7500
F: (949) 224-7501

REGISTERED PROFESSIONAL ENGINEER
ALBERT MATHEWS
E 18650
EXP. 12/31/2026
ELECTRICAL
STATE OF CALIFORNIA

SCALE:	AS SHOWN
DRAWN:	R. SHARMA
CHECKED:	D. WAGNER
DESIGNED:	A. MATHEWS
	ENGINEER / ARCHITECT

TERMINAL ISLAND MARITIME SUPPORT FACILITY

ELECTRICAL PLAN - AREA 6

THE PORT OF LOS ANGELES
ENGINEERING DIVISION
425 S. PALOS VERDES STREET SAN PEDRO CA 90731-3309

DRAWING NUMBER 1-3513

SHEET NUMBER E-08

POLAPRO1_040223_BWD

MATCHLINE, SEE DRAWING E-08 FOR CONTINUATION

No.	CONSTRUCTION ITEM	REFERENCE DWG
302	ELECTRICAL DUCTBANK	E-15, E-28, E-29
303	ELECTRICAL HANDHOLE	
304	ELECTRICAL VAULT/MANHOLE	E-16
308	HIGH MAST LIGHTING	E-17, E-18, E-19

DUCTBANK SCHEDULE (THIS DRAWING)	
DUCTBANK CALLOUT	CONDUIT ID
1	FROM MSB-E TO HHE-06 P210, P211A, P211A1, P211B, P212A, P213A, P213A1, P213B, SP-P210, SP-P211A, SP-P211A1, SP-P211B, SP-P212A, SP-P213A, SP-P213A1, SP-P213B
2	FROM MSB-E TO HHE-07 P211A, P211A1, P211B, P210, SP-P211A, SP-P211A1, SP-P211B, SP-P210
H	FROM MH-C0 (AREA-8) TO MSB-A (AREA-6) VIA MH-C1,C2(AREA 6) P-102-A,P-102-B, SP-102-A(POWER),SP-100-F (POWER)

GENERAL NOTES:

1. CONTRACTOR SHALL CORDINATE DEPTH OF DUCTBANKS WITH OTHER SURROUNDING UTILITIES.
2. SEE DRAWINGS E-28 AND E-29 FOR TYPICAL DUCTBANK SECTION.
3. NEW WORK IS SHOWN BOLD.
4. NOT ALL MANHOLES AND PULLBOXES ARE SHOWN. SEE AREA PLANS FOR COMPLETE CONDUCTOR ROUTING DETAILS.

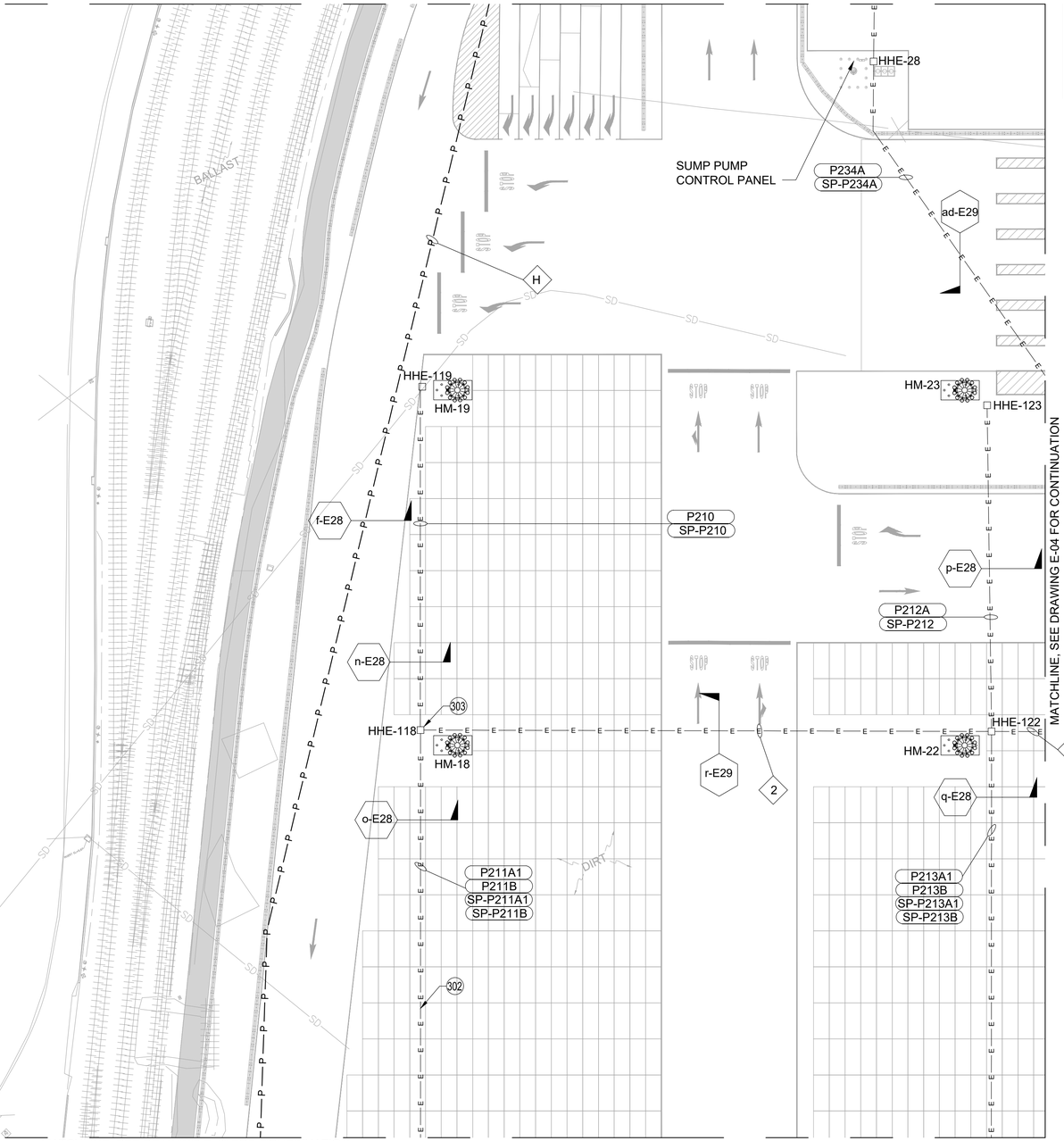

MATCHLINE, SEE DRAWING E-10 FOR CONTINUATION

7E-02 / E-09 PLAN

SCALE: 1" = 40'

N

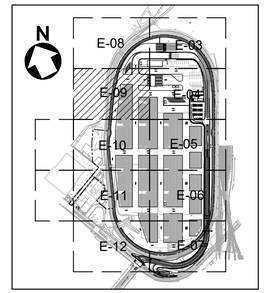

KEY MAP

40' 0' 40' 80'

SCALE: 1" = 40'

NO.	DATE	DRAWN	REVISIONS -	CHK'D	APP'D
A	3/20/25	-	30% CONCEPTUAL DESIGN		
B	4/25/25	-	FINAL CONCEPTUAL DESIGN		
C	7/18/25	-	40% DESIGN		
D	9/19/25	-	80% DESIGN		

NOT FOR CONSTRUCTION

NO.	DATE	DRAWN	REVISIONS -	CHK'D	APP'D

80% DESIGN REVIEW
SEP 19 , 2025

Jacobs
2600 MICHELSON DRIVE, SUITE 500
IRVINE, CA 92612
T: (949) 224-7500
F: (949) 224-7501

REGISTERED PROFESSIONAL ENGINEER
KEEY MATHEWS
E 18650
EXP. 12/31/2026
ELECTRICAL
STATE OF CALIFORNIA

SCALE:	AS SHOWN
DRAWN:	R. SHARMA
CHECKED:	D. WAGNER
DESIGNED:	A. MATHEWS
	ENGINEER / ARCHITECT

TERMINAL ISLAND MARITIME SUPPORT FACILITY

ELECTRICAL PLAN - AREA 7

THE PORT OF LOS ANGELES
ENGINEERING DIVISION
425 S. PALOS VERDES STREET SAN PEDRO CA 90731-3309

DRAWING NUMBER 1-3513

SHEET NUMBER E-09

MATCHLINE, SEE DRAWING E-09 FOR CONTINUATION

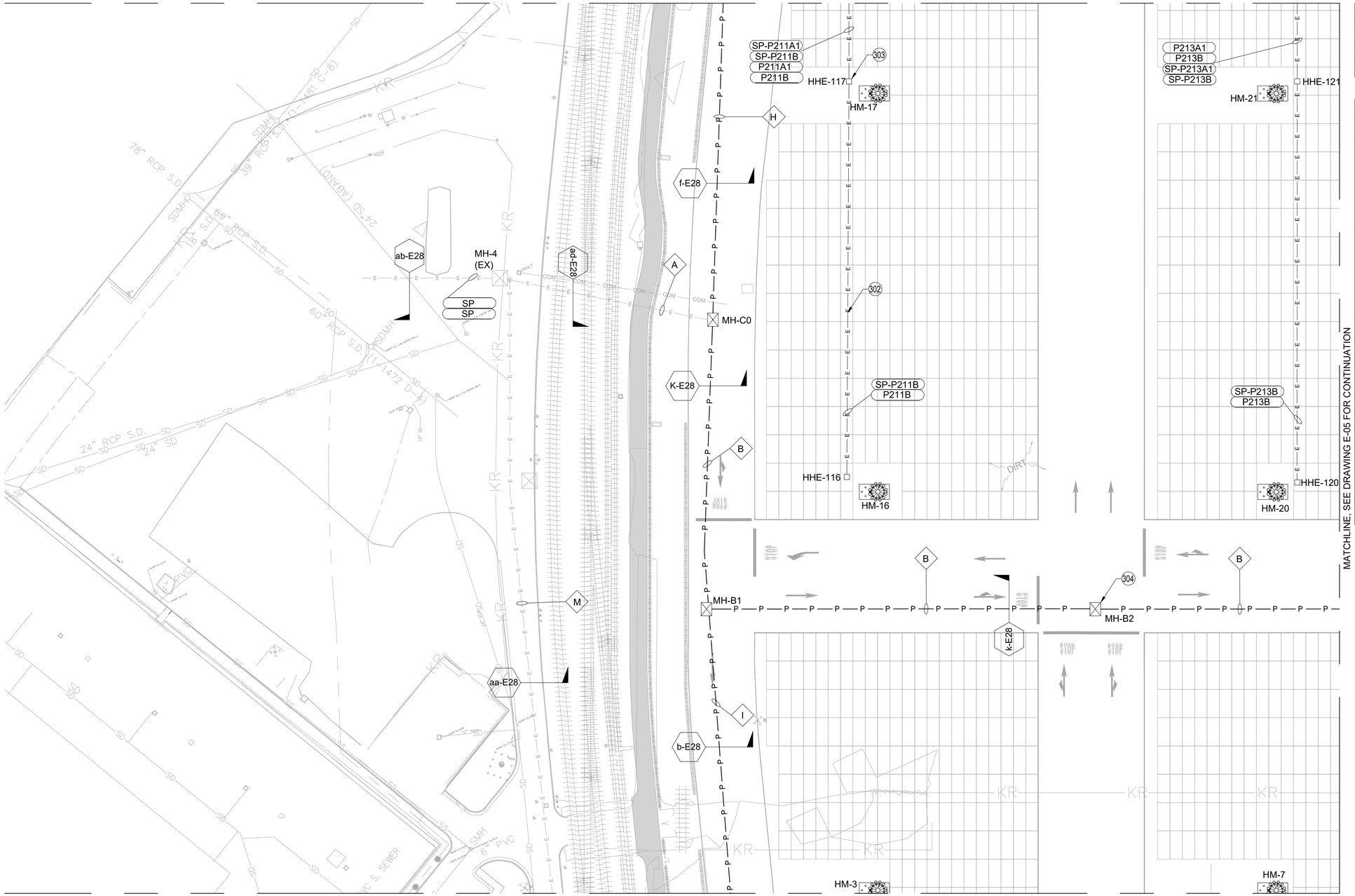

MATCHLINE, SEE DRAWING E-11 FOR CONTINUATION

MATCHLINE, SEE DRAWING E-05 FOR CONTINUATION

No.	CONSTRUCTION ITEM	REFERENCE DWG
302	ELECTRICAL DUCTBANK	E-15, E-28, E-29
303	ELECTRICAL HANDHOLE	
304	ELECTRICAL VAULT/MANHOLE	E-16
308	HIGH MAST LIGHTING	E-17, E-18, E-19

DUCTBANK SCHEDULE (THIS DRAWING)	
DUCTBANK CALLOUT	CONDUIT ID
A	FROM MH-4(EX) (AREA 8) TO MH-C0 (AREA 8) P-101-A, P-101-B, P-105-A, P-105-B, SP-101-A (POWER), SP-105-A (POWER), P-104-A, P-104-B, SP-104-A (POWER), P-138-A, P-138-B, SP-138-A, P-102-A, P-102-B, SP-102-A (POWER), SP-100-F (POWER)
B	FROM MH-CO (AREA 8) TO MH-B3 (AREA 3) VIA MH-B1 & MH-B2 (AREA 8) P-101-A, P-101-B, P-105-A, P-105-B, SP-101-A (POWER), SP-105-A (POWER), P-104-A, P-104-B, SP-104-A (POWER),P-138-A, P-138-B, SP-138-A
H	FROM MH-C0 (AREA-8) TO MSB-A (AREA-6) VIA MH-C1,C2(AREA 6) P-102-A,P-102-B, SP-102-A(POWER),SP-100-F (POWER)
I	FROM MH-B1 (AREA-8) TO MH-A1 (AREA-9) SP-100-G (POWER), SP-100-H (POWER)
M	FROM SWITCHGEAR BUILDING TO MH-4(Ex) P-101-A, P-101-B, P-105-A, P-105-B, SP-101-A (POWER), SP-105-A (POWER), P-104-A, P-104-B, SP-104-A (POWER), P-138-A, P-138-B, SP-138-A, P-102-A, P-102-B, SP-102-A (POWER), SP-100-F (POWER)

GENERAL NOTES:

1. CONTRACTOR SHALL CORDINATE DEPTH OF DUCTBANKS WITH OTHER SURROUNDING UTILITIES.
2. SEE DRAWINGS E-28 AND E-29 FOR TYPICAL DUCTBANK SECTION.
3. WORK IS SHOWN BOLD.
4. NOT ALL MANHOLES AND PULLBOXES ARE SHOWN. SEE AREA PLANS FOR COMPLETE CONDUCTOR ROUTING DETAILS.

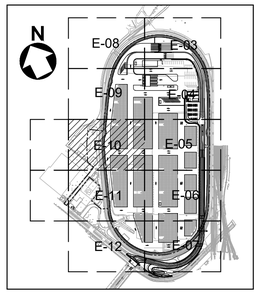

KEY MAP

40' 0' 40' 80'

SCALE: 1" = 40'

8E-02 / E-10 PLAN

SCALE: 1" = 40'

N

NO.	DATE	DRAWN	REVISIONS -	CHK'D	APP'D
A	3/20/25	-	30% CONCEPTUAL DESIGN		
B	4/25/25	-	FINAL CONCEPTUAL DESIGN		
C	7/18/25	-	40% DESIGN		
D	9/19/25	-	80% DESIGN		

NOT FOR CONSTRUCTION

NO.	DATE	DRAWN	REVISIONS -	CHK'D	APP'D
			80% DESIGN REVIEW SEP 19 , 2025		

Jacobs
2600 MICHELSON DRIVE, SUITE 500
IRVINE, CA 92612
T: (949) 224-7500
F: (949) 224-7501

REGISTERED PROFESSIONAL ENGINEER
ALEX MATHEWS
E 18650
EXP. 12/31/2026
ELECTRICAL
STATE OF CALIFORNIA

SCALE:	AS SHOWN
DRAWN:	R. SHARMA
CHECKED:	D. WAGNER
DESIGNED:	A. MATHEWS
	ENGINEER / ARCHITECT

TERMINAL ISLAND MARITIME SUPPORT FACILITY

ELECTRICAL PLAN - AREA 8

THE PORT OF LOS ANGELES
ENGINEERING DIVISION
425 S. PALOS VERDES STREET SAN PEDRO CA 90731-3309

DRAWING NUMBER: 1-3513

SHEET NUMBER: E-10

POLAPR01_040223_BWD

MATCHLINE, SEE DRAWING E-10 FOR CONTINUATION

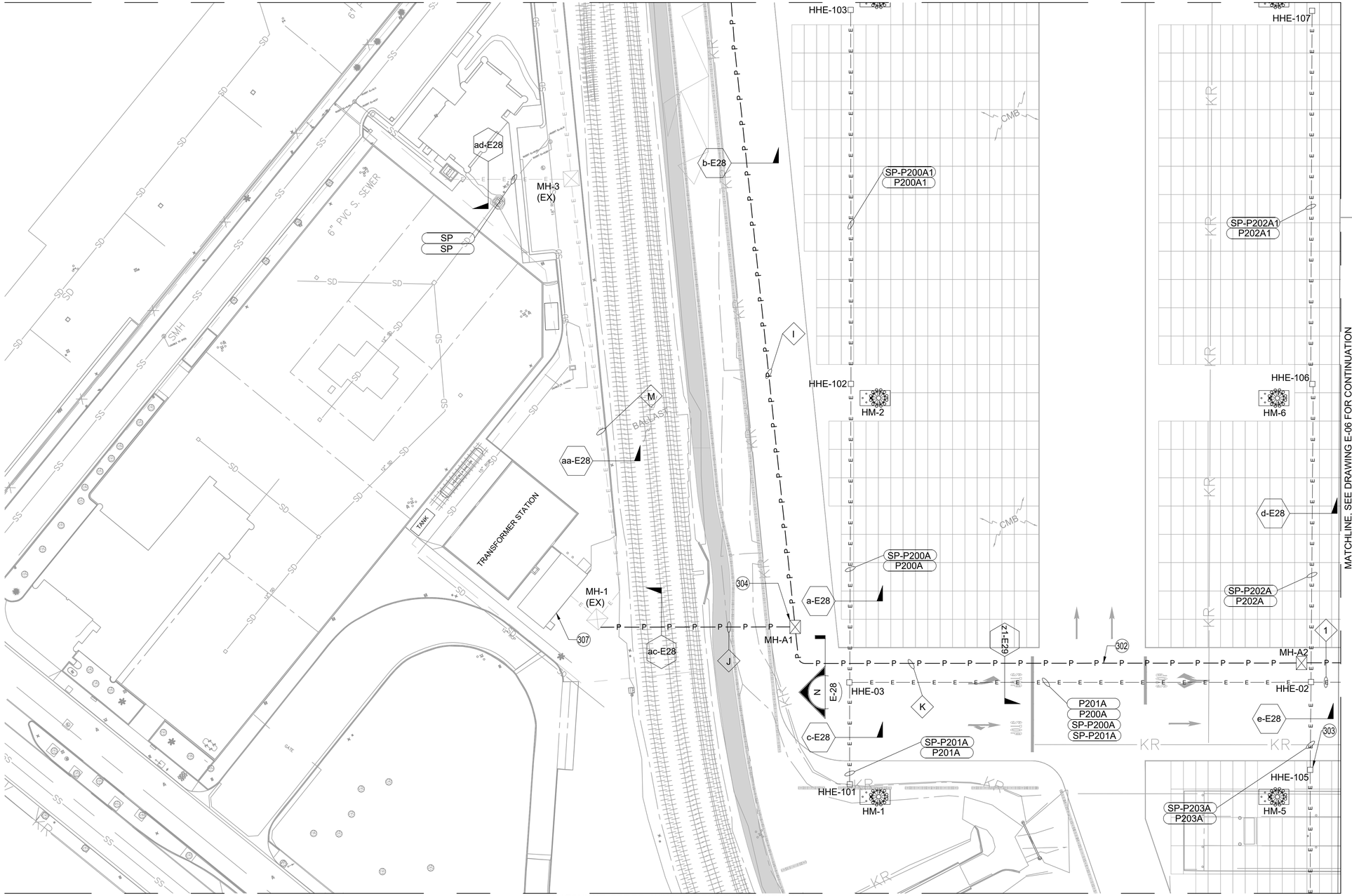

No.	CONSTRUCTION ITEM	REFERENCE DWG
302	ELECTRICAL DUCTBANK	E-15, E-28, E-29
303	ELECTRICAL HANDHOLE	
304	ELECTRICAL VAULT/MANHOLE	E-16
308	HIGH MAST LIGHTING	E-17, E-18, E-19

DUCTBANK SCHEDULE (THIS DRAWING)	
DUCTBANK CALLOUT	CONDUIT ID
1	FROM MSB-F TO HHE-2: P200A,P201A,P202A,P203A,SP-P200A,SP-P201A, SP-P202A,SP-P203A,
I	FROM MH-B1 (AREA-8) TO MH-A1 (AREA-9) SP-100-G (POWER), SP-100-H (POWER)
K	FROM MH-A1 (AREA 9) TO MSB-F (AREA 4) VIA MH-A2 (AREA 9) & MH-A3 (AREA 4) P-103-A, P-103-B, SP-103-A(POWER), SP-100-E (POWER)
M	FROM SWITCHGEAR BUILDING TO MH-4(Ex) P-101-A, P-101-B, P-105-A, P-105-B, SP-101-A (POWER), SP-105-A (POWER), P-104-A, P-104-B, SP-104-A (POWER), P-138-A, P-138-B, SP-138-A, P-102-A, P-102-B, SP-102-A (POWER), SP-100-F (POWER)

GENERAL NOTES:

1. CONTRACTOR SHALL CORDINATE DEPTH OF DUCTBANKS WITH OTHER SURROUNDING UTILITIES.
2. SEE DRAWINGS E-28 AND E-29 FOR TYPICAL DUCTBANK SECTION.
3. WORK IS SHOWN BOLD.
4. NOT ALL MANHOLES AND PULLBOXES ARE SHOWN. SEE AREA PLANS FOR COMPLETE CONDUCTOR ROUTING DETAILS.

J	FROM MH-1(Ex) TO MH-A1 (AREA 9) P-103-A,P-103-B, SP-103-A(POWER), SP-100-I(POWER)

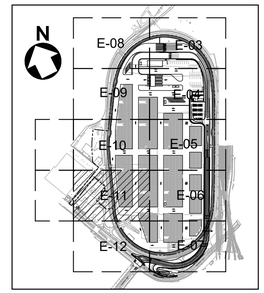

9E-02 / E-11 PLAN
SCALE: 1" = 40'

40' 0' 40' 80'
SCALE: 1" = 40'

NO.	DATE	DRAWN	REVISIONS -	CHK'D	APP'D
A	3/20/25	-	30% CONCEPTUAL DESIGN		
B	4/25/25	-	FINAL CONCEPTUAL DESIGN		
C	7/18/25	-	40% DESIGN		
D	9/19/25	-	80% DESIGN		

NOT FOR CONSTRUCTION

80% DESIGN REVIEW
SEP 19 , 2025

Jacobs
2600 MICHELSON DRIVE, SUITE 500
IRVINE, CA 92612
T: (949) 224-7500
F: (949) 224-7501

REGISTERED PROFESSIONAL ENGINEER — ALEXANDER MATTHEWS — E 18550 EXP. 12/31/2026 — ELECTRICAL — STATE OF CALIFORNIA

SCALE: AS SHOWN
DRAWN: R. SHARMA
CHECKED: D. WAGNER
DESIGNED: A. MATHEWS
ENGINEER / ARCHITECT

TERMINAL ISLAND MARITIME SUPPORT FACILITY

ELECTRICAL PLAN - AREA 9

THE PORT OF LOS ANGELES
ENGINEERING DIVISION
425 S. PALOS VERDES STREET SAN PEDRO CA 90731-3309

DRAWING NUMBER: 1-3513
SHEET NUMBER: E-11

POLAPRO1_040223_BWD

MATCHLINE, SEE DRAWING E-11 FOR CONTINUATION

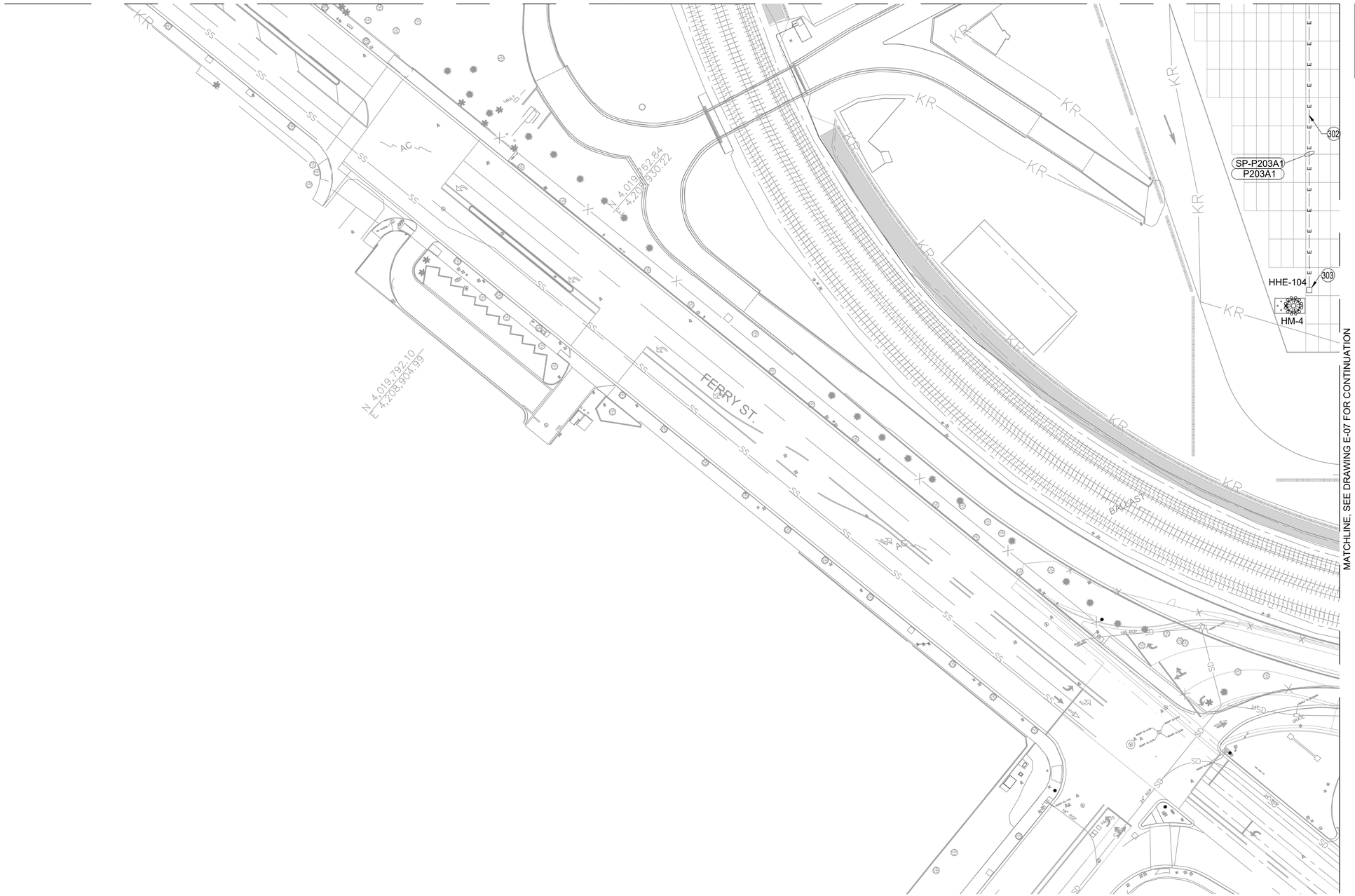

No.	CONSTRUCTION ITEM	REFERENCE DWG
302	ELECTRICAL DUCTBANK	E-15, E-28, E-29
303	ELECTRICAL HANDHOLE	
304	ELECTRICAL VAULT/MANHOLE	E-16
308	HIGH MAST LIGHTING	E-17, E-18, E-19

GERNAL NOTES:

1. CONTRACTOR SHALL CORDINATE DEPTH OF DUCTBANKS WITH OTHER SURROUNDING UTILITIES.
2. SEE DRAWINGS E-28 AND E-29 FOR TYPICAL DUCTBANK SECTION.
3. WORK IS SHOWN BOLD.
4. NOT ALL MANHOLES AND PULLBOXES ARE SHOWN. SEE AREA PLANS FOR COMPLETE CONDUCTOR ROUTING DETAILS.

10E-02 / E-12 PLAN
SCALE: 1" = 40'

N

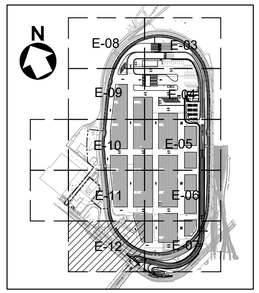

KEY MAP

40' 0' 40' 80'
SCALE: 1" = 40'

NO.	DATE	DRAWN	REVISIONS -	CHK'D	APP'D
A	3/20/25	-	30% CONCEPTUAL DESIGN		
B	4/25/25	-	FINAL CONCEPTUAL DESIGN		
C	7/18/25	-	40% DESIGN		
D	9/19/25	-	80% DESIGN		

NOT FOR CONSTRUCTION

NO.	DATE	DRAWN	REVISIONS -	CHK'D	APP'D
			80% DESIGN REVIEW SEP 19 , 2025		

Jacobs
2900 MICHELSON DRIVE, SUITE 500
IRVINE, CA 92612
T: (949) 224-7500
F: (949) 224-7501

REGISTERED PROFESSIONAL ENGINEER
KEEY MATHEWS
E 18650
EXP. 12/31/2026
ELECTRICAL
STATE OF CALIFORNIA

SCALE: AS SHOWN
DRAWN: R. SHARMA
CHECKED: D. WAGNER
DESIGNED: A. MATHEWS
ENGINEER / ARCHITECT

TERMINAL ISLAND MARITIME SUPPORT FACILITY

ELECTRICAL PLAN - AREA 10

THE PORT OF LOS ANGELES
ENGINEERING DIVISION
425 S. PALOS VERDES STREET SAN PEDRO CA 90731-3309

DRAWING NUMBER: 1-3513
SHEET NUMBER: E-12

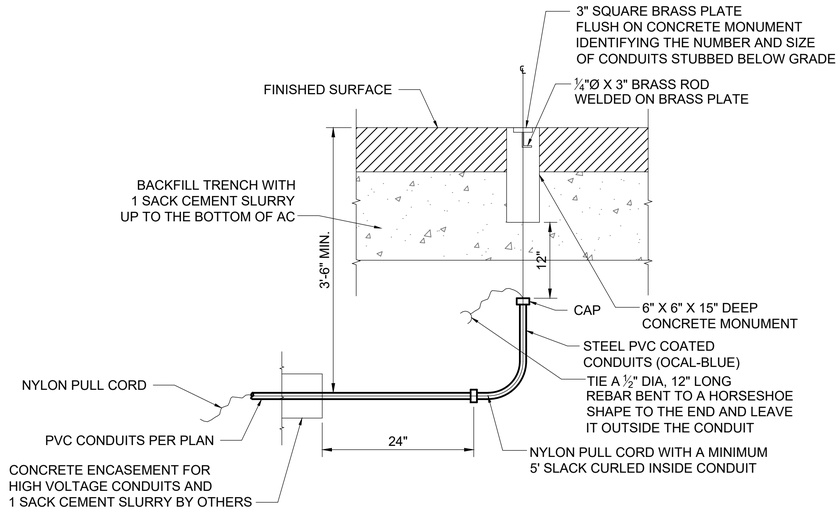

1E-13 / E-13 TYP CONDUIT STUB SECTION BELOW GRADE
SCALE: NTS

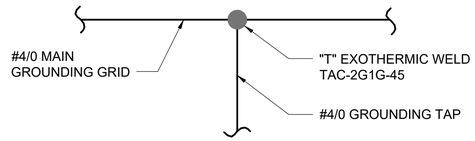

2E-13 / E-13 TYP BRANCH TAP & MAIN GROUND WELD
SCALE: NTS

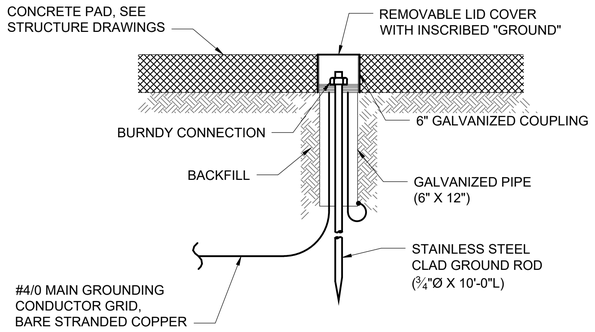

3E-13 / E-13 TYP GROUNDING WELL
SCALE: NTS

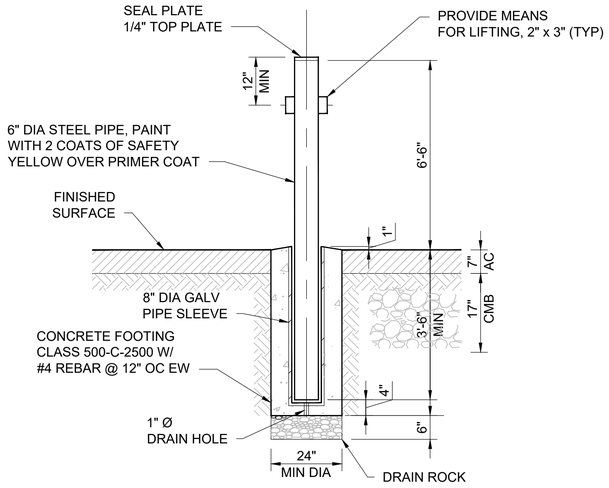

4E-13 / E-13 REMOVABLE GUARD POST DETAIL
SCALE: NTS

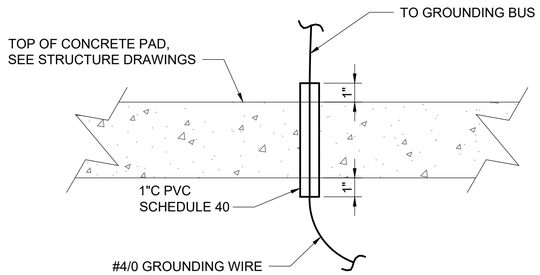

5E-13 / E-13 TYP SWGR & XFMR GROUNDING
SCALE: NTS

NO.	DATE	DRAWN	REVISIONS -	CHK'D	APP'D
A	3/20/25	-	30% CONCEPTUAL DESIGN		
B	4/25/25	-	FINAL CONCEPTUAL DESIGN		
C	7/18/25	-	40% DESIGN		
D	9/19/25	-	80% DESIGN		

NOT FOR CONSTRUCTION

NO.	DATE	DRAWN	REVISIONS -	CHK'D	APP'D

80% DESIGN REVIEW
SEP 19 , 2025

Jacobs
2600 MICHELSON DRIVE, SUITE 500
IRVINE, CA 92612
T: (949) 224-7500
F: (949) 224-7501

REGISTERED PROFESSIONAL ENGINEER
AMEY MATHEWS
E 18650
EXP. 12/31/2026
ELECTRICAL
STATE OF CALIFORNIA

SCALE: AS SHOWN
DRAWN: R. SHARMA
CHECKED: D. WAGNER
DESIGNED: A. MATHEWS
ENGINEER / ARCHITECT

TERMINAL ISLAND MARITIME SUPPORT FACILITY

ELECTRICAL DETAILS

THE PORT OF LOS ANGELES
ENGINEERING DIVISION
425 S. PALOS VERDES STREET SAN PEDRO CA 90731-3309

DRAWING NUMBER 1-3513
SHEET NUMBER E-13

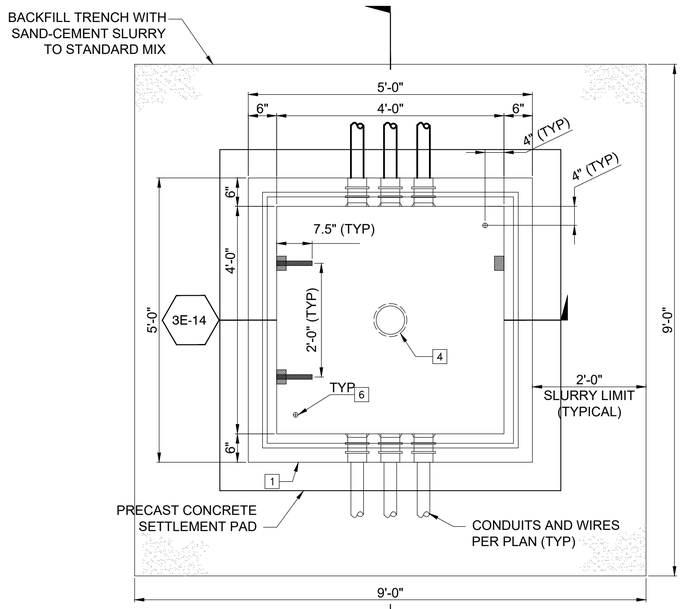

1E-14 / E-14 PRECAST PULL BOX-PLAN VIEW

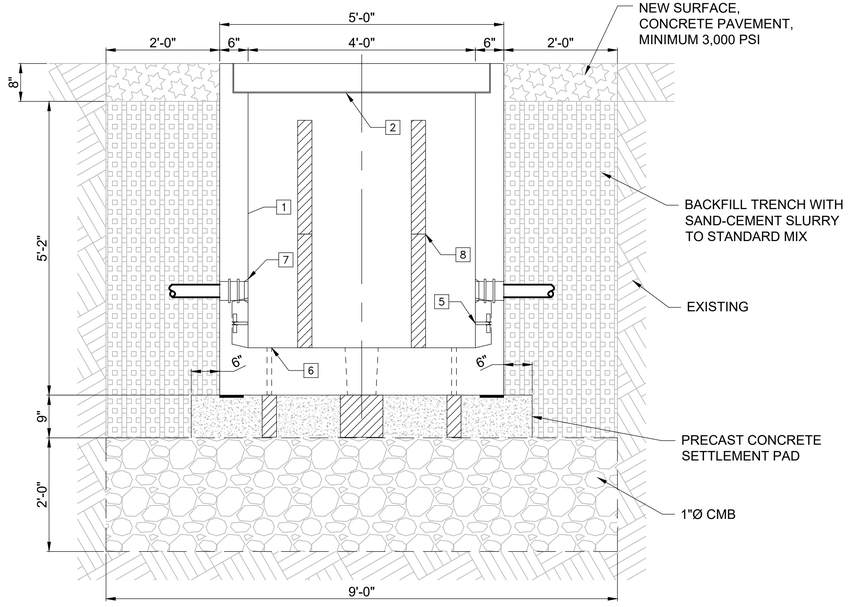

2E-14 / E-14 PRECAST PULL BOX-SECTION VIEW

TYPICAL PRECAST CONCRETE PULL BOX NOTES:	
1	PULL BOX SHALL BE DESIGNED FOR 100KIP WHEEL PLUS 25% IMPACT FOR A TOTAL OF 125KIP ON A 2'-0" X 2'-6" WHEEL IMPACT AREA. THE ALLOWABLE SOIL PRESSURE AT THE BOTTOM OF THE PULL BOX SHALL MEET THE LATEST LADB&S BUILDING CODE.
2	COVER TUBE AND FRAME SHALL BE DESIGNED FOR 125 KIP ON A 2'-0" X 2'-6" WHEEL IMPACT AREA.
3	CONCRETE SETTLEMENT PAD SHALL BE PLACED ON A MINIMUM OF 24" OF 1Ø CMB FOR EASE OF INSTALLATION AND EVEN LOAD DISTRIBUTION.
4	THE FOLLOWING MATERIALS SHALL BE SHIPPED WITH EACH PULL BOX: (8)-14 HOLE HOT DIP GALVANIZED UNDERGROUND CABLE ROCKS (16)-7½' HOT DIP GALVANIZED UNDERGROUND CABLE RACKS HOOKS
5	ALL CONDUITS SHALL ENTER AND LEAVE PULL BOX SO THE INSIDE DIMENSIONS OF THE PULL BOX SHALL MEET THE LATEST LADB&S ELECTRICAL CODE (TYPICAL).
6	HOT DIP GALVANIZED UNDERGROUND CABLES RACKS SHALL BE INSTALLED ON 1' BELOW TUBE COVER (TYPICAL).
7	ALL CONDUIT AND WIRES SHALL BE LABELED. ALL WIRES SPLICES SHALL BE WATER PROOF SPLICING. ALL CONDUITS SHALL BE POSITIONED IN COMPLIANCE WITH THE LATEST LADB&S ELECTRICAL CODE.
8	CONTRACTOR SHALL EXCAVATE IN ACCORDANCE WITH MANUFACTURER'S RECOMMENDATION AND POLA DRAWINGS AND SPECIFICATIONS WITH ENOUGH DEPTH TO SUIT FIELD CONDITIONS.
9	ALL EXPOSED NON-CURRENT CARRYING METAL PARTS, CABLE'S RACKS AND HOOKS, CONDUITS AND TUBE COVER AND ITS SUPPORTING FRAME SHALL BE BONDED TOGETHER AND CONNECTED TO A COMMON GROUND AND TO THE INCOMING GROUND.
10	PULL BOX, CONCRETE SETTLEMENT PAD, TUBE COVER AND FRAME SHALL BE DESIGNED IN COMPLIANCE WITH THE LATEST LADB&S CODE BY A CIVIL ENGINEER REGISTERED IN THE STATE OF CALIFORNIA. SHOP DRAWINGS AND CALCULATIONS BEARING THE ENGINEER'S SIGNATURE AND STAMP SHALL BE SUBMITTED TO THE ENGINEER FOR APPROVAL

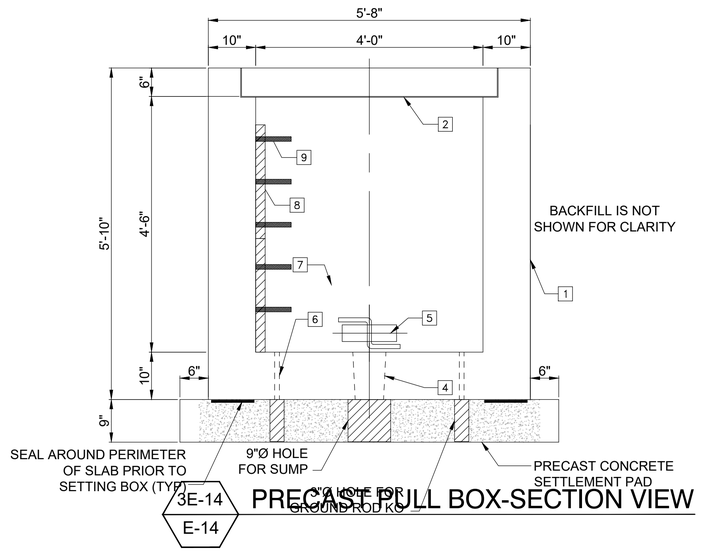

3E-14 / E-14 PRECAST PULL BOX-SECTION VIEW

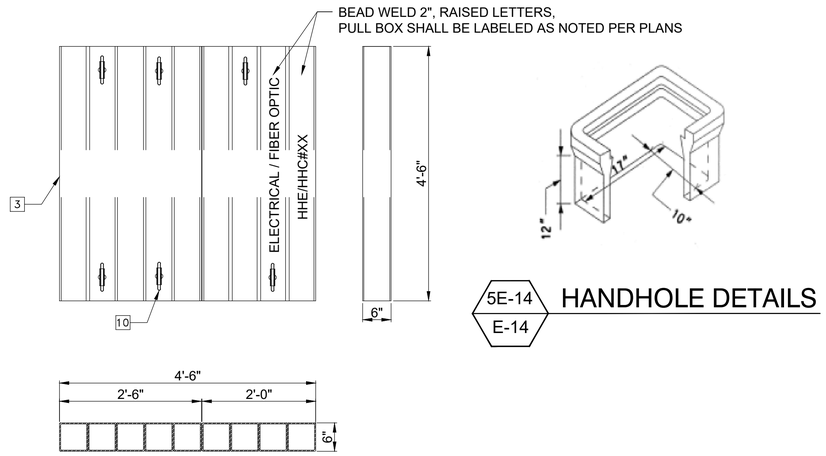

5E-14 / E-14 HANDHOLE DETAILS

4E-14 / E-14 PRECAST PULL BOX-TUBE COVER

KEYNOTES:	
1	"JENSEN PRECAST" PRECAST CONCRETE PULL BOX
2	HOT DIP GALVANIZED FRAME FOR TUBE COVER RATED FOR 125 KIP
3	4'-6⅛" x 4'-6¼" X 9", 125 KIP STRUCTURAL TWO PIECES HOT DIP GALVANIZED TUBE COVER TO BE SPECIFIED WITH "ELECTRIC", FOR LVMH PULL BOX AND "FIBER OPTIC /SIGNAL" FOR AMH PULL BOX AS SHOWN ON PLANS
4	6"Ø x 7"Ø x 10" DEEP SUMP
5	7/8" DIAMETER HOT DIP GALVANIZED PULL IRON
6	1" DIAMETER GROUND ROD KNOCKOUT x 10" DEEP
7	TERMINATORS CAST-IN AS REQUIRED PER PLANS
8	INWESCO CAT. #10A08 HOT DIP GALVANIZED UNDERGROUND CABLE RACKS, 24"L.
9	INWESCO CAT. #10A36 HOT DIP GALVANIZED UNDERGROUND CABLE RACKS HOOKS, 7.5"L.
10	1/2" DIAMETER HOT DIP GALVANIZED DROP HANDLE FLUSH WITH TUBE COVER

DETAIL NOTES:	
1	DIMENSION SHOWN ARE FOR 48" X 48" PULL BOX AND REPRESENT THE TYPE OF CONSTRUCTION REQUIRED FOR ALL PULL BOXES & COVERS.SEE MANHOLE AND PULL BOX SCHEDULE FOR SIZES.
2	TWO SACK - SAND SLURRY SHALL BE PLACED AROUND ALL PRECAST CONCRETE BOXES (ELECTRICAL, COMMUNICATION, ETC.), AS SHOWN.
3	COVER SHALL BE MARKED AS INDICATED ON MANHOLE/PULL BOX SCHEDULE BY 2" TALL LTTERS.

NO.	DATE	DRAWN	REVISIONS -	CHK'D	APP'D
A	3/20/25	-	30% CONCEPTUAL DESIGN		
B	4/25/25	-	FINAL CONCEPTUAL DESIGN		
C	7/18/25	-	40% DESIGN		
D	9/19/25	-	80% DESIGN		

NOT FOR CONSTRUCTION

80% DESIGN REVIEW SEP 19 , 2025

Jacobs
3600 MICHELSON DRIVE, SUITE 500
IRVINE, CA 92612
T: (949) 224-7500
F: (949) 224-7501

REGISTERED PROFESSIONAL ENGINEER — ALBERT MATHEWS — E 18650 EXP. 12/31/2026 — ELECTRICAL — STATE OF CALIFORNIA

SCALE: AS SHOWN
DRAWN: R. SHARMA
CHECKED: D. WAGNER
DESIGNED: A. MATHEWS
ENGINEER / ARCHITECT

TERMINAL ISLAND MARITIME SUPPORT FACILITY

ELECTRICAL DETAILS

THE PORT OF LOS ANGELES
ENGINEERING DIVISION
425 S. PALOS VERDES STREET SAN PEDRO CA 90731-3309

DRAWING NUMBER 1-3513
SHEET NUMBER E-14

POLAPRD1_040223_BWD

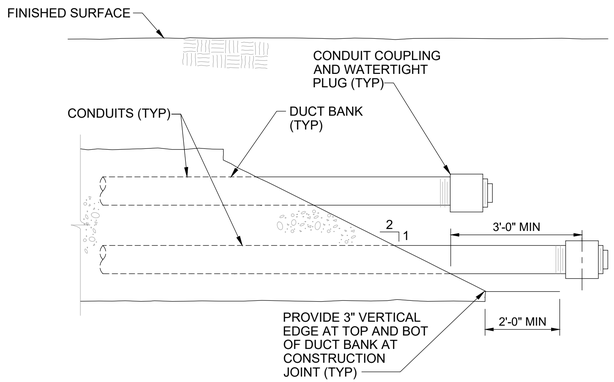

1E-15 / E-15 DUCT BANK CONSTRUCTION AT CONTRACT LIMIT

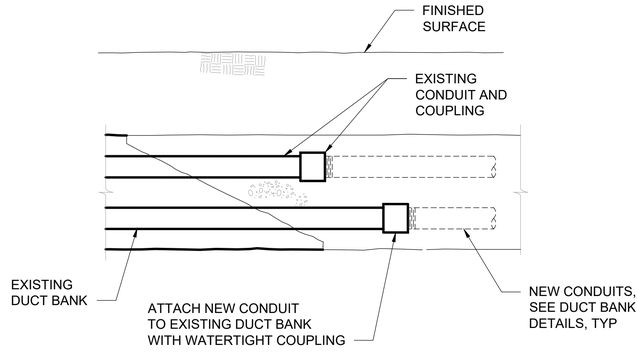

2E-15 / E-15 DUCT BANK CONTINUATION AT CONTRACT LIMIT

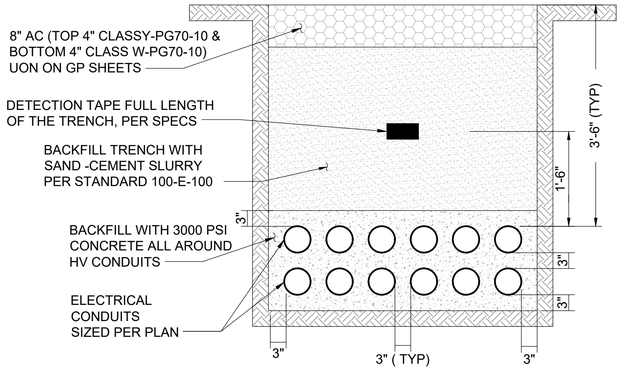

NOTES:

1. SEE PLANS FOR ALL CONDUITS SIZES AND TOTAL NUMBER.
2. COVER TRENCH WITH NEW MATERIALS.
3. PROVIDE 4/0 BARE STRANDED COPPER GROUNDING CONDUCTOR IN DUCT BANK AND CONNECTED TO A GROUND ROD IN THE MAINTENANCE HOLE.

3E-15 / E-15 TYPICAL HV ELECTRICAL DUCT BANK

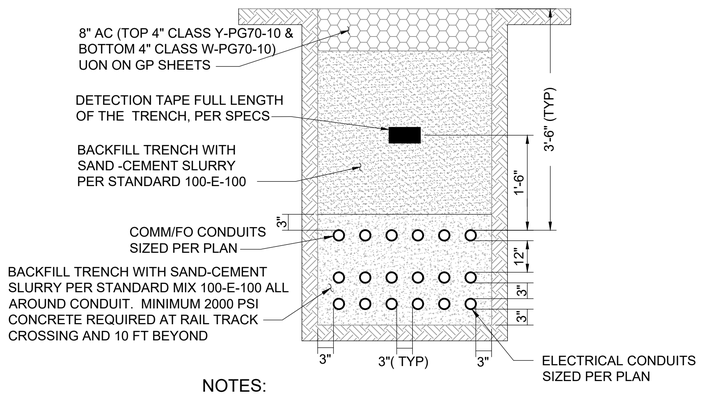

NOTES:

1. SEE PLANS FOR ALL CONDUITS SIZES AND TOTAL NUMBER.
2. COVER TRENCH WITH NEW MATERIALS.
3. PROVIDE 4/0 BARE STRANDED COPPER GROUNDING CONDUCTOR IN DUCT BANK AND CONNECTED TO A GROUND ROD IN THE PRECAST PULL BOX.

4E-15 / E-15 TYPICAL LV ELECTRICAL DUCT BANK

GENERAL NOTES:

1. CONTRACTOR SHALL COORDINATE DEPTH OF DUCTBANKS WITH OTHER SURROUNDING UTILITIES.
2. SEE DRAWINGS E-28 AND E-29 FOR TYPICAL DUCTBANK SECTION.

NO.	DATE	DRAWN	REVISIONS -	CHK'D	APP'D
A	3/20/25	-	30% CONCEPTUAL DESIGN		
B	4/25/25	-	FINAL CONCEPTUAL DESIGN		
C	7/18/25	-	40% DESIGN		
D	9/19/25	-	80% DESIGN		

NOT FOR CONSTRUCTION

NO.	DATE	DRAWN	REVISIONS -	CHK'D	APP'D

80% DESIGN REVIEW SEP 19 , 2025

Jacobs
2920 MICHELSON DRIVE, SUITE 500
IRVINE, CA 92612
T: (949) 224-7500
F: (949) 224-7501

REGISTERED PROFESSIONAL ENGINEER — AMEY MATHEWS — E 18650 EXP. 12/31/2026 — ELECTRICAL — STATE OF CALIFORNIA

SCALE: AS SHOWN
DRAWN: R. SHARMA
CHECKED: D. WAGNER
DESIGNED: A. MATHEWS
ENGINEER / ARCHITECT

TERMINAL ISLAND MARITIME SUPPORT FACILITY

ELECTRICAL DETAILS

THE PORT OF LOS ANGELES
ENGINEERING DIVISION
425 S. PALOS VERDES STREET SAN PEDRO CA 90731-3309

DRAWING NUMBER: 1-3513
SHEET NUMBER: E-15

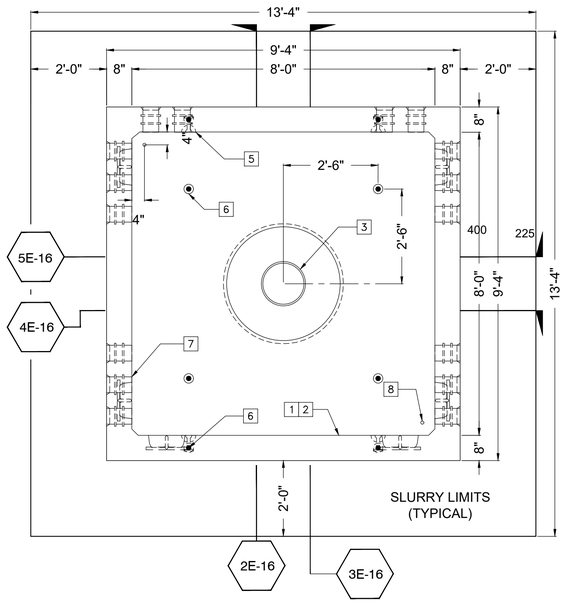

1E-16 / E-16 MAINTENANCE HOLE - PLAN VIEW
SCALE: NTS

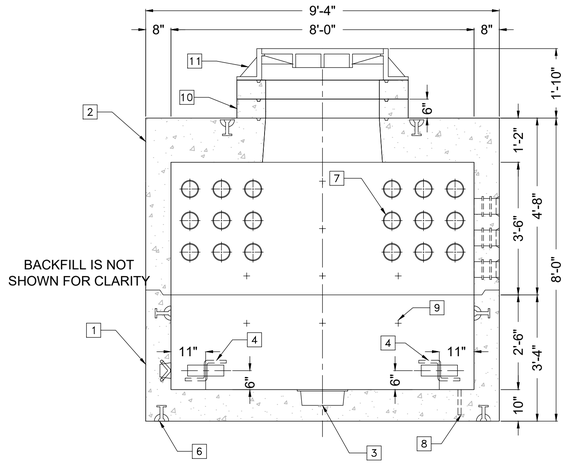

2E-16 / E-16 MAINTENANCE HOLE - SECTION VIEW
SCALE: NTS

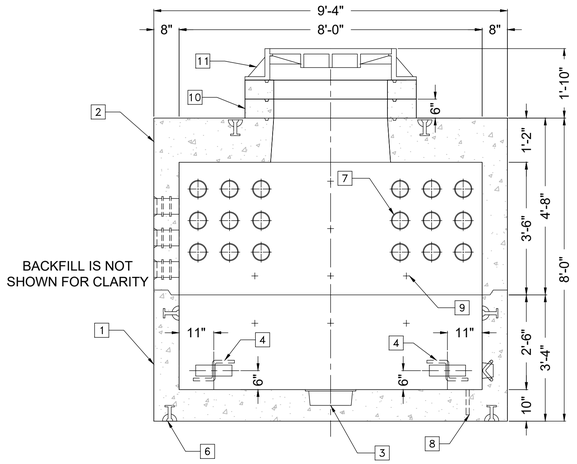

3E-16 / E-16 MAINTENANCE HOLE - SECTION VIEW
SCALE: NTS

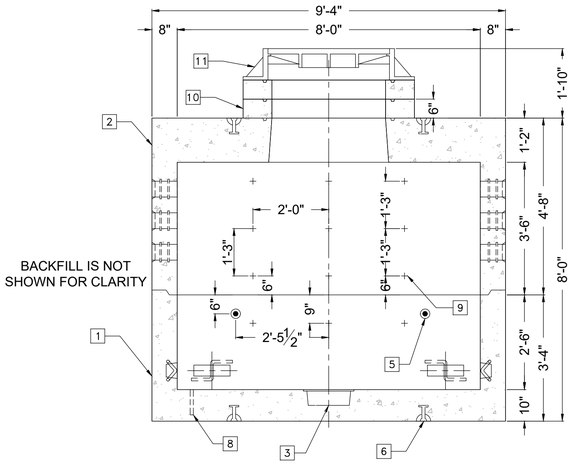

4E-16 / E-16 MAINTENANCE HOLE - SECTION VIEW
SCALE: NTS

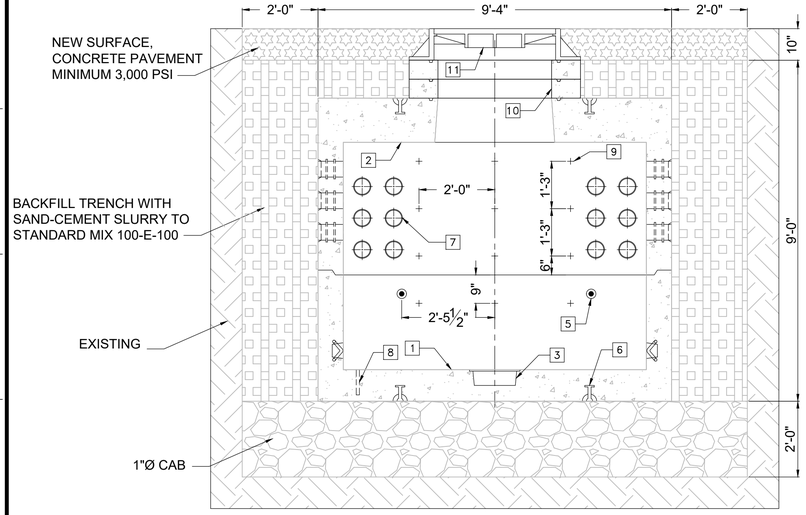

5E-16 / E-16 MAINTENANCE HOLE - SECTION VIEW
SCALE: NTS

TYPICAL PRECAST HV MAINTENANCE HOLE NOTES:

1. MAINTENANCE HOLE SHALL BE DESIGNED FOR 100KIP WHEEL PLUS 25% IMPACT FOR A TOTAL OF 125KIP ON A 2'-0" X 2'-6" WHEEL IMPACT AREA. THE ALLOWABLE SOIL PRESSURE AT THE BOTTOM OF THE MAINTENANCE HOLE SHALL MEET THE LATEST LADB&S BUILDING CODE.
2. GRADE RINGS AND COVER SHALL BE DESIGNED FOR 125 KIP ON A 2'-0" X 2'-6" WHEEL IMPACT AREA.
3. MAINTENANCE HOLE SHALL BE PLACED ON A MINIMUM OF 24" CMB FOR EASE OF INSTALLATION AND EVEN LOAD DISTRIBUTION.
5. ALL CONDUITS SHALL ENTER AND LEAVE MAINTENANCE HOLE SO THE INSIDE DIMENSIONS OF THE MAINTENANCE HOLE SHALL MEET THE LATEST LADB&S ELECTRICAL CODE (TYPICAL).
7. ALL CONDUITS AND WIRES SHALL BE LABELED. ALL WIRES SPLICES SHALL BE WATER PROOF SPLICING. ALL CONDUITS SHALL BE POSITIONED IN COMPLIANCE WITH THE LATEST LADB&S ELECTRICAL CODE.
8. CONTRACTOR SHALL EXCAVATE IN ACCORDANCE WITH MANUFACTURER'S "JENSEN PRECAST" RECOMMENDATION AND POLA DRAWINGS AND SPECIFICATIONS WITH ENOUGH DEPTH TO SUIT FIELD CONDITIONS.
9. ALL EXPOSED NON-CURRENT CARRYING METAL PARTS, CONDUITS AND COVER AND ITS SUPPORTING RINGS SHALL BE BONDED TOGETHER AND CONNECTED TO A COMMON GROUND AND TO THE INCOMING GROUND.
10. MAINTENANCE HOLE, COVER AND RINGS SHALL BE DESIGNED IN COMPLIANCE WITH THE LATEST LADB&S BUILDING CODE BY A CIVIL ENGINEER REGISTERED IN THE STATE OF CALIFORNIA. SHOP DRAWINGS AND CALCULATIONS BEARING THE ENGINEER'S SIGNATURE AND STAMP SHALL BE SUBMITTED TO THE ENGINEER FOR APPROVAL.
11. GROUNDWATER MAY BE ENCOUNTERED WHEN EXCAVATING FOR MAINTENANCE HOLE. DEWATERING IS NOT PERMITTED. CASING OF EXCAVATIONS MAY BE REQUIRED IN ADDITION TO OTHER SHORING REQUIREMENTS.

KEYNOTES:

1. PRECAST MAINTENANCE HOLE, 30" BOTTOM SECTION
2. PRECAST MAINTENANCE HOLE, 42" TOP SECTION WITH NEENAH FOUNDRY 36" DIAMETER 125 KIP CAST IRON COVER
3. 12" DIAMETER SUMP KNOCKOUT
4. (6) 7/8" DIAMETER HOT DIPPED GALVANIZED PULL IRONS, BOTTOM SECTION CORE MOUNTED
5. (8) 8 TON x 6 3/4" HOT DIPPED GALVANIZED RISS, BOTTOM SECTION (4) CORE MOUNTED, TOP SECTION (4) SURFACE MOUNTED
6. (4) 8 TON x 13 3/8" HOT DIPPED GALVANIZED RISS, BOTTOM SECTION SURFACE MOUNTED
7. (48) 5" DIAMETER TERMINATORS TOP SECTION CORE MOUNTED
8. (2) 1" DIAMETER GROUND ROD KNOCKOUT, CORE MOUNTED BOTTOM SECTION
9. (40) 1/2" DIAMETER PLASTIC RACKING INSERTS, LOCATED AS FOLLOWS: TOP SECTION (28) CORE MOUNTED, BOTTOM SECTION (12) CORE MOUNTED
10. (2) 6" GRADE RING
11. (1) 10" HIGH, 125 KIP, COVER, LABELED "DANGER HIGH VOLTAGE KEEP OUT" AND "MH #XX". MAINTENANCE HOLE SHALL BE LABELED AS NOTED PER PLANS. ALL LABELS SHALL BE BEAD WELD 2" RAISED LETTERS.

GENERAL NOTES:

1. CONTRACTOR SHALL COORDINATE DEPTH OF DUCTBANKS WITH OTHER SURROUNDING UTILITIES.
2. SEE DRAWINGS E-28 AND E-29 FOR TYPICAL DUCTBANK SECTION.

NO.	DATE	DRAWN	REVISIONS -	CHK'D	APP'D
A	3/20/25	-	30% CONCEPTUAL DESIGN		
B	4/25/25	-	FINAL CONCEPTUAL DESIGN		
C	7/18/25	-	40% DESIGN		
D	9/19/25	-	80% DESIGN		

NOT FOR CONSTRUCTION

NO.	DATE	DRAWN	REVISIONS -	CHK'D	APP'D

80% DESIGN REVIEW
SEP 19 , 2025

Jacobs
2600 MICHELSON DRIVE, SUITE 600
IRVINE, CA 92612
T: (949) 224-7500
F: (949) 224-7501

REGISTERED PROFESSIONAL ENGINEER
AMIT MATHEW'S
E 18650
EXP. 12/31/2026
ELECTRICAL
STATE OF CALIFORNIA

SCALE:	AS SHOWN
DRAWN:	R. SHARMA
CHECKED:	D. WAGNER
DESIGNED:	A. MATHEWS

ENGINEER / ARCHITECT

TERMINAL ISLAND MARITIME SUPPORT FACILITY

ELECTRICAL DETAILS

THE PORT OF LOS ANGELES
ENGINEERING DIVISION
425 S. PALOS VERDES STREET SAN PEDRO CA 90731-3309

DRAWING NUMBER	SHEET NUMBER
1-3513	E-16

POLAPRD1_042023_BWD

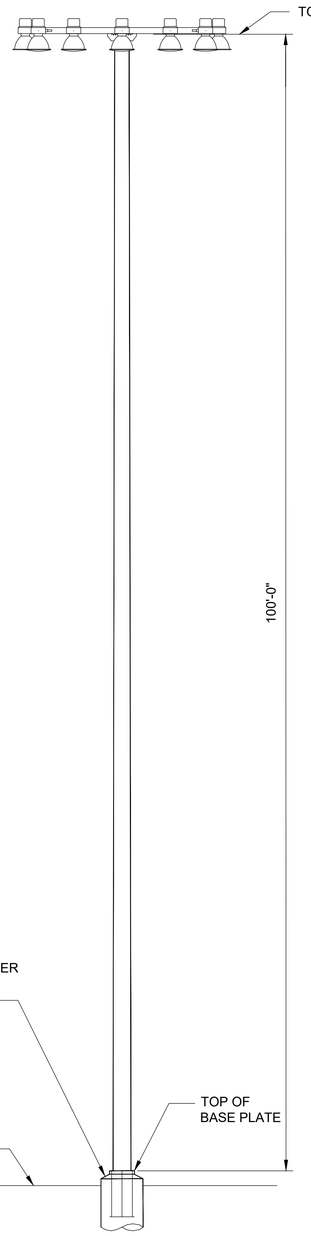

1E-17 / E-17 **100' LIGHT POLE**
SCALE: NTS

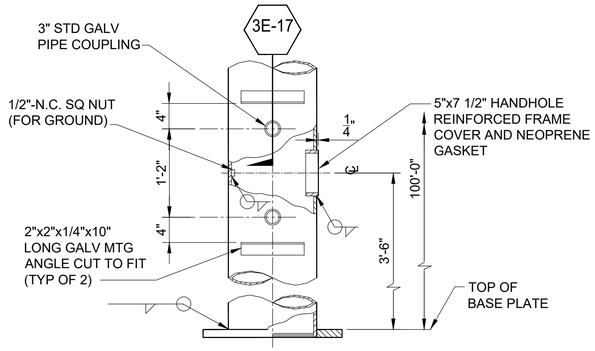

2E-17 / E-17 **POLE BASE DETAIL - ELEVATION**
SCALE: NTS

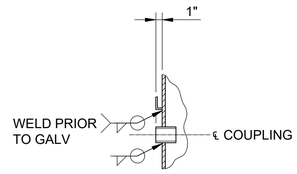

3E-17 / E-17 **POLE BASE DETAIL-PARTIAL SECTION**
SCALE: NTS

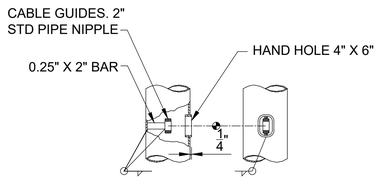

CABLE GUIDES LOCATED AT APPROXIMATELY
30 FEET SPACING UP THE POLE

4E-17 / E-17 **INTERNAL CABLE GUIDE DETAIL**
SCALE: NTS

GENERAL NOTES:

1. PIPE TO BE ASTM A53, GRADE "B". OR HIGHER STRENGTH MATERIAL.
2. STEEL PIPE TO HAVE MIN. YIELD STRESS OF 35,000 PSI.
3. POLES TO BE HOT DIP GALV TO ASTM A123 AND ALL HARDWARE TO ASTM A153 PER SPEC., AFTER FABRICATION (GALV IN NO MORE THAN THREE SECTIONS).
4. PLATFORM ASSEMBLIES TO BE GALV AFTER FABRICATION. PLATFORMS TO BE ATTACHED BY CONTRACTOR.
5. WELDS MADE AFTER GALV TO BE COATED WITH 3 MILS OF A SOLVENT BASE INORGANIC ZINC SILICATE PER SPECS.
6. CONTRACTOR TO FURNISH DETAILED INFORMATION ON THE MOUNTING OF ALL ELECTRICAL EQUIPMENT.
7. POLE MANUFACTURER TO BE A CITY OF LOS ANGELES LICENSED FABRICATOR. SUBMIT CERTIFICATION W/ THE SHOP DRAWINGS.
8. DESIGN POLE FOR A MIN. OF 12 FIXTURES WITH A 3 SQ. FT. WIND LOAD AREA FOR EACH FIXTURE.
9. CALCULATION SHALL DETERMINE ALL MEMBER SIZES AND WELD SIZES.
10. MEMBER AND WELD SIZES SHOWN HEREON ARE MINIMUMS.
11. ALL DESIGN AND CONSTRUCTION SHALL BE IN ACCORDANCE WITH THE LATEST EDITION OF LOS ANGELES CITY BUILDING CODE.
12. CONTRACTOR SHALL SUBMIT COMPLETE POLE SERVICE PLATFORM CALCULATIONS AND SHOP DRAWINGS TO THE LOS ANGELES HARBOR DEPARTMENT FOR APPROVAL, PRIOR TO FABRICATION.
13. CALCULATIONS AND SHOP DRAWINGS SHALL BE SIGNED BY A STRUCTURAL OR CIVIL ENGINEER LICENSED IN THE STATE OF CALIFORNIA.
14. CONTRACTOR SHALL COMPLETELY ASSEMBLE AND ERECT ALL LIGHT POLES IN ACCORDANCE WITH THE FOLLOWING TOLERANCE. LIGHT POLES ARE CONSIDERED PLUMB AND ALIGNED IF THE ERROR OF ERECTION (POLE C) DOES NOT EXCEED 1:500. IN THE EVENT IT IS FOUND OTHERWISE, THE CONTRACTOR IS REQUIRED TO MAKE THE NECESSARY CORRECTIONS TO MEET THE SPECIFIED TOLERANCE AT HIS/HER EXPENSE.
15. THE LIGHT POLE SHALL SATISFY THE CONDITIONS NOTED BELOW:

    A. WIND LOAD BASED ON 2009 AASHTO STD SPECIFICATIONS FOR STRUCTURAL SUPPORTS FOR HIGHWAY SIGNS, LUMINAIRES AND TRAFFIC SIGNALS.
    BASIC WIND SPEED: 85 MPH
    EXPOSURE: TYPE C, OPEN, FLAT TERRAIN
    IMPORTANCE FACTOR: I_W = 1.0

    B. MAX. POLE DEFLECTION INCLUDING DEAD LOAD OF POLE SHALL BE LIMITED TO 16" UNDER 45 MPH WIND LOAD.

    C. MAX. POLE DEFLECTION INCLUDING DEAD LOAD OF POLE SHALL BE LIMITED TO 16" UNDER ZERO MPH WIND LOAD AND THERMAL DEFLECTION.

16. LIGHT FIXTURE ATTACHMENTS AND CONNECTIONS ARE NOT DETAILED ON THIS DRAWING, SEE ELECTRICAL DWGS. THE CONTRACTOR SHALL SUBMIT DETAILS FOR L.A.H.D. APPROVAL PRIOR TO FABRICATION.
17. IF NECESSARY, THE FLOOD LIGHT FIXTURES LOADS INSTALLED ON ONE HALF OF THE POLE RING AS SHOWN ON THE ELECTRICAL DWGS. SHALL BE COUNTER BALANCED TO CREATE A BALANCED LOADING ON THE POLE.
18. SEE SPECIFICATION 265613 FOR ADDITIONAL REQUIREMENTS.
19. CONTRACTOR SHALL COORDINATE DEPTH OF DUCTBANKS WITH OTHER SURROUNDING UTILITIES.
20. SEE DRAWINGS E-28 AND E-29 FOR TYPICAL DUCTBANK SECTION.

NO.	DATE	DRAWN	REVISIONS -	CHK'D	APP'D
A	3/20/25	-	30% CONCEPTUAL DESIGN		
B	4/25/25	-	FINAL CONCEPTUAL DESIGN		
C	7/18/25	-	40% DESIGN		
D	9/19/25	-	80% DESIGN		

NOT FOR CONSTRUCTION

NO.	DATE	DRAWN	REVISIONS -	CHK'D	APP'D
			80% DESIGN REVIEW SEP 19 , 2025		

Jacobs
2600 MICHELSON DRIVE, SUITE 500
IRVINE, CA 92612
T: (949) 224-7500
F: (949) 224-7501

REGISTERED PROFESSIONAL ENGINEER — MET MATHEWS — E 18650 EXP. 12/31/2026 — ELECTRICAL — STATE OF CALIFORNIA

SCALE:	AS SHOWN
DRAWN:	R. SHARMA
CHECKED:	D. WAGNER
DESIGNED:	A. MATHEWS
	ENGINEER / ARCHITECT

TERMINAL ISLAND MARITIME SUPPORT FACILITY

ELECTRICAL DETAILS

THE PORT OF LOS ANGELES
ENGINEERING DIVISION
425 S. PALOS VERDES STREET SAN PEDRO CA 90731-3309

DRAWING NUMBER	SHEET NUMBER
1-3513	E-17

POLAPROT_043023_BWD

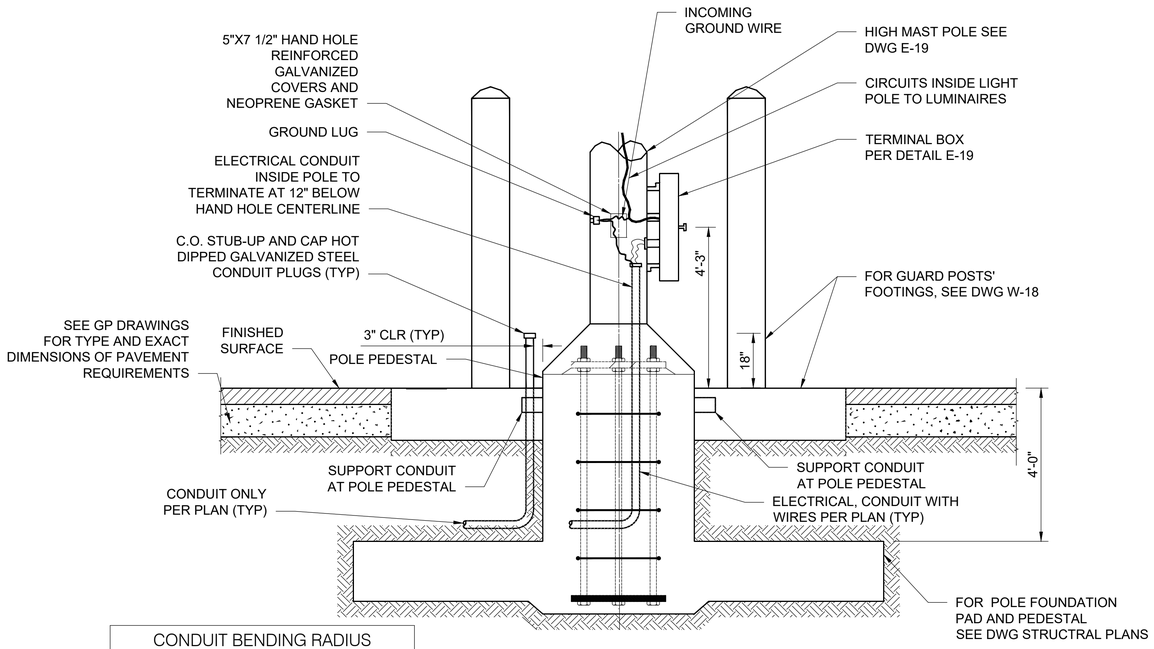

CONDUIT BENDING RADIUS	
DIAMETER	MINIMUM BENDING RADIUS
1"	6"
2"	12"
3"	18"
4"	24"
*PER 2023 CITY OF LA ELECTRICAL CODE	

1E-18 / E-18 **LIGHT POLE ELEVATION VIEW**
SCALE: NTS

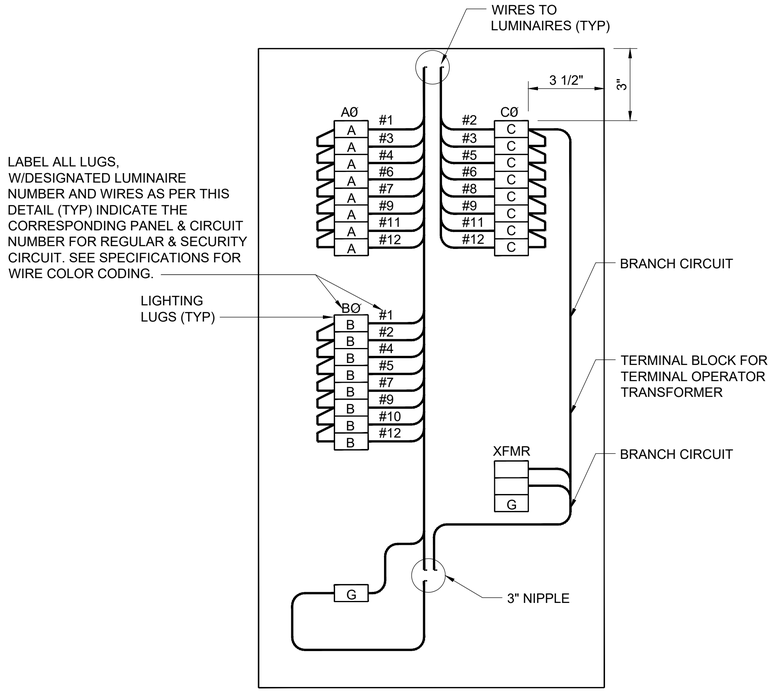

2E-18 / E-18 **HIGH MAST LIGHTING TERMINAL BOX DETAIL ELEVATION**
SCALE: NTS

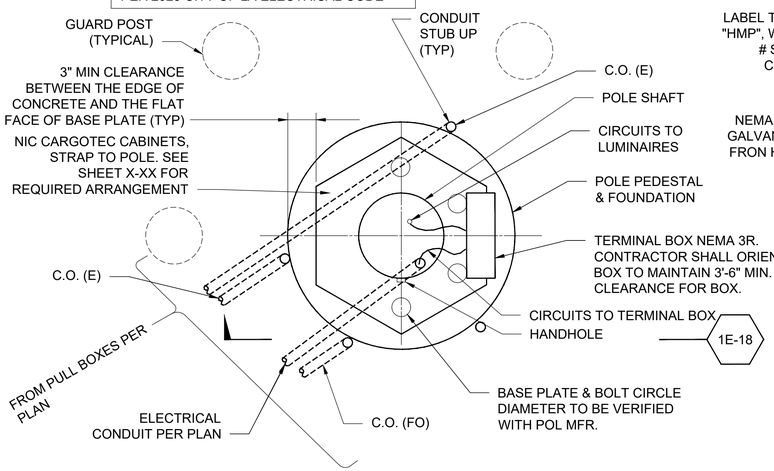

NOTES:
1. NOT ALL GUARD POSTS ARE SHOWN.
2. FOR LIGHT POLE AND GUARD POSTS ORIENTATION, SEE PLANS.

4E-18 / E-18 **PLAN - BASE FOR 100' LIGHT POLE**
SCALE: NTS

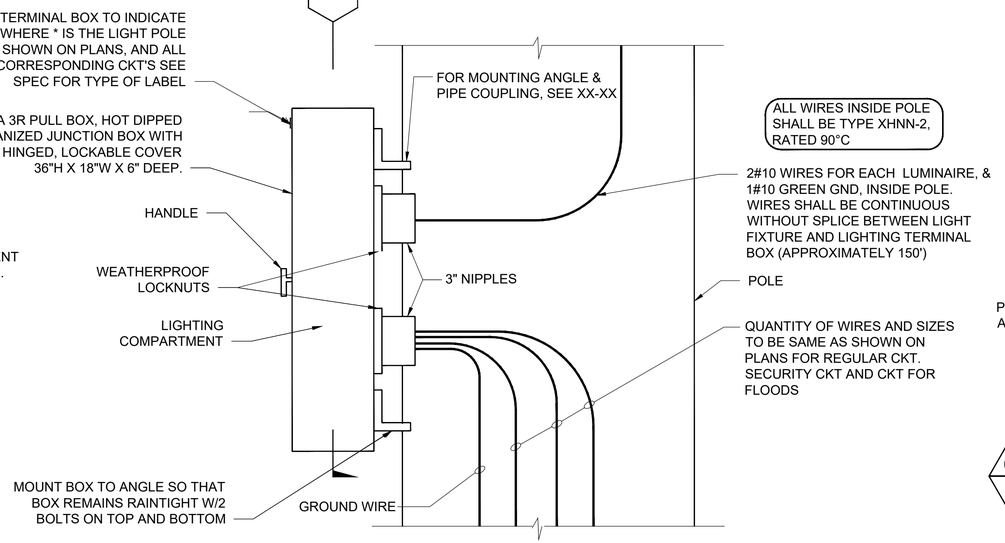

5E-18 / E-18 **POLE TERMINAL BOX (TYPICAL)**
SCALE: NTS

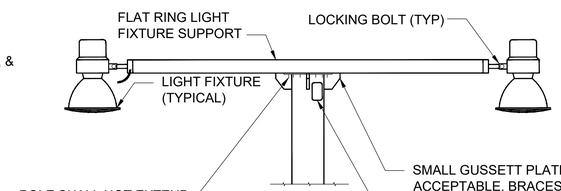

6E-18 / E-18 **HIGH MAST FIXTURE INSTALLATION AT POLE**
SCALE: NTS

GENERAL NOTES:
1. CONTRACTOR SHALL COORDINATE DEPTH OF DUCTBANKS WITH OTHER SURROUNDING UTILITIES.
2. SEE DRAWINGS E-28 AND E-29 FOR TYPICAL DUCTBANK SECTION.

NO.	DATE	DRAWN	REVISIONS -	CHK'D	APP'D
A	3/20/25	-	30% CONCEPTUAL DESIGN		
B	4/25/25	-	FINAL CONCEPTUAL DESIGN		
C	7/18/25	-	40% DESIGN		
D	9/19/25	-	80% DESIGN		

NOT FOR CONSTRUCTION

NO.	DATE	DRAWN	REVISIONS -	CHK'D	APP'D

80% DESIGN REVIEW SEP 19 , 2025

Jacobs
3600 MICHELSON DRIVE, SUITE 500
IRVINE, CA 92612
T: (949) 224-7500
F: (949) 224-7501

REGISTERED PROFESSIONAL ENGINEER — MATTHEW A. MATHEWS — E 18650 EXP. 12/31/2026 — ELECTRICAL — STATE OF CALIFORNIA

SCALE: AS SHOWN
DRAWN: R. SHARMA
CHECKED: D. WAGNER
DESIGNED: A. MATHEWS
ENGINEER / ARCHITECT

TERMINAL ISLAND MARITIME SUPPORT FACILITY

ELECTRICAL DETAILS

THE PORT OF LOS ANGELES
ENGINEERING DIVISION
425 S. PALOS VERDES STREET SAN PEDRO CA 90731-3309

DRAWING NUMBER: 1-3513
SHEET NUMBER: E-18

POLAPRO1_040223_BWD

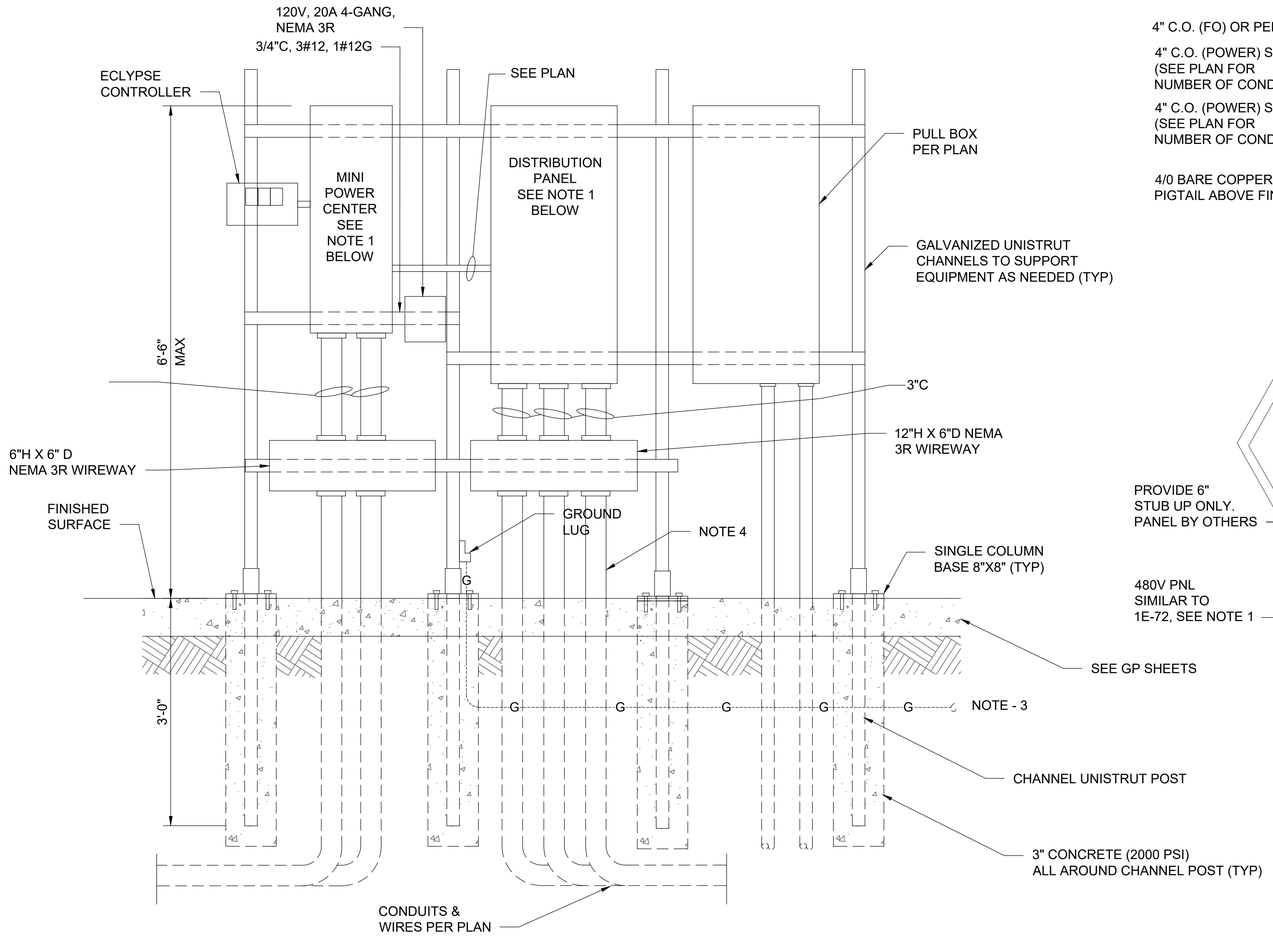

1E-19 / E-19 **EQUIPMENT INSTALLATION-ELEVATION AT HMLP**

SCALE: 1" = 1'-0"

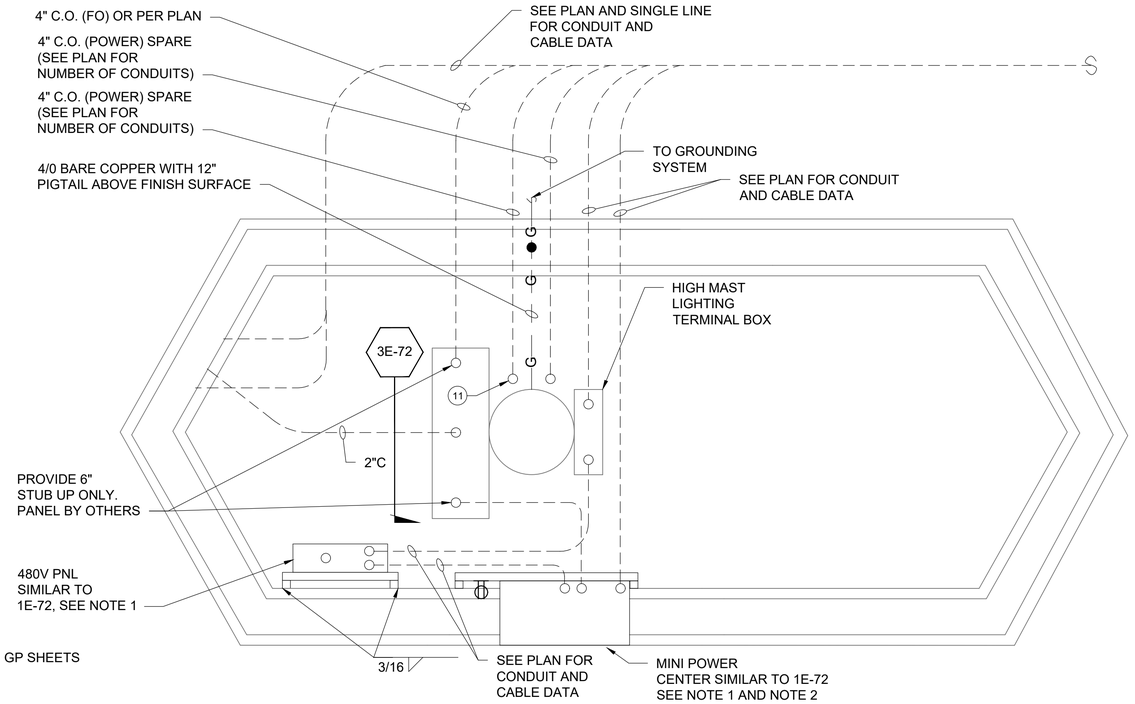

2E-19 / E-19 **HIGH MAST LIGHT POLE DETAIL**

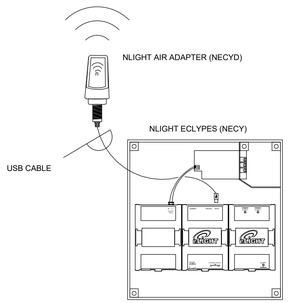

SYSTEM NOTES

1. EACH ZONE OF CONTROL IS LIMITED TO 128 DEVICES.
2. EVERY HIGH MAST THAT CONTAINS NETWORKED NLIGHT AIR DEVICES REQUIRES ITS OWN DEDICATED NECY WITH NECYD.
3. DEVICES WITHIN INITIAL BROADCAST RANGE SHOULD BE WITHIN 100 FEET (TYPICAL FOR INDOOR CONSTRUCTION) OR WITHIN 1,000 FEET LINE-OF-SIGHT (TYPICAL FOR OUTDOOR CONSTRUCTION).
4. NLIGHT AIR ADAPTER SHOULD BE PLACED IN AN OPEN SPACE FOR BEST WIRELESS SIGNAL STRENGTH.

NLIGHT ECLYPSE (NECY) TO NLIGHT AIR ADAPTER (NECYD)

N.T.S.

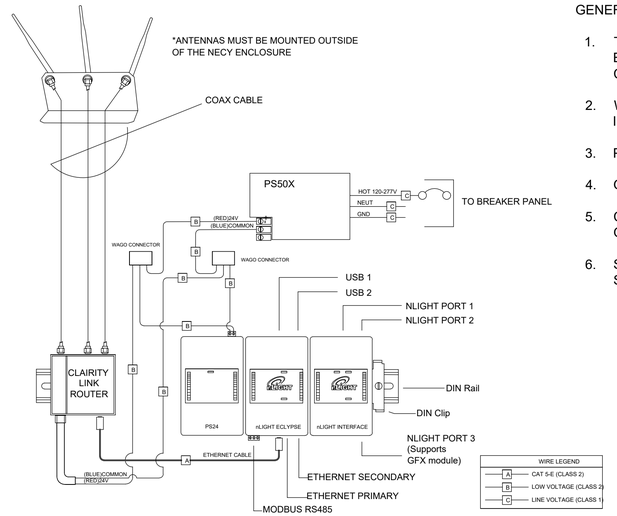

NECY MVOLT ENC REM DETAIL (ENCLOSURE NOT SHOWN)

N.T.S.

GENERAL NOTES:

1. THIS DETAIL SHOWN THE INSTALLATION OF ANY ELECTRICAL EQUIPMENT SPECIFIED ON PLAN TO BE INSTALLED AT UNISTRUT CHANNEL, UNLESS OTHERWISE NOTED.
2. WIDTH AND HEIGHT SHALL BE TO ACCOMMODATE THE INTENDED ELECTRICAL EQUIPMENT, AND INSTALLED PER CODE.
3. PROVIDE GROUNDING PER CODE.
4. GROUP CONDUIT PER ENTITY. SEE SPECS 26 00 01.
5. CONTRACTOR SHALL COORDINATE DEPTH OF DUCTBANKS WITH OTHER SURROUNDING UTILITIES.
6. SEE DRAWINGS E-28 AND E-29 FOR TYPICAL DUCTBANK SECTION.

NO.	DATE	DRAWN	REVISIONS -	CHK'D	APP'D
A	3/20/25	-	30% CONCEPTUAL DESIGN		
B	4/25/25	-	FINAL CONCEPTUAL DESIGN		
C	7/18/25	-	40% DESIGN		
D	9/19/25	-	80% DESIGN		

NOT FOR CONSTRUCTION

NO.	DATE	DRAWN	REVISIONS -	CHK'D	APP'D

80% DESIGN REVIEW SEP 19 , 2025

Jacobs
2600 MICHELSON DRIVE, SUITE 500
IRVINE, CA 92612
T: (949) 224-7500
F: (949) 224-7501

REGISTERED PROFESSIONAL ENGINEER ABEY MATHEWS E 18650 EXP. 12/31/2026 ELECTRICAL STATE OF CALIFORNIA

SCALE: AS SHOWN
DRAWN: R. SHARMA
CHECKED: D. WAGNER
DESIGNED: A. MATHEWS
ENGINEER / ARCHITECT

TERMINAL ISLAND MARITIME SUPPORT FACILITY

ELECTRICAL DETAILS

THE PORT OF LOS ANGELES
ENGINEERING DIVISION
425 S. PALOS VERDES STREET SAN PEDRO CA 90731-3309

DRAWING NUMBER 1-3513
SHEET NUMBER E-19

POLAPRO1_040223_BWD

REFERENCE DRAWING	
DRAWING NO.	TITLE
K582-E-215	SINGLE LINE DIAGRAM

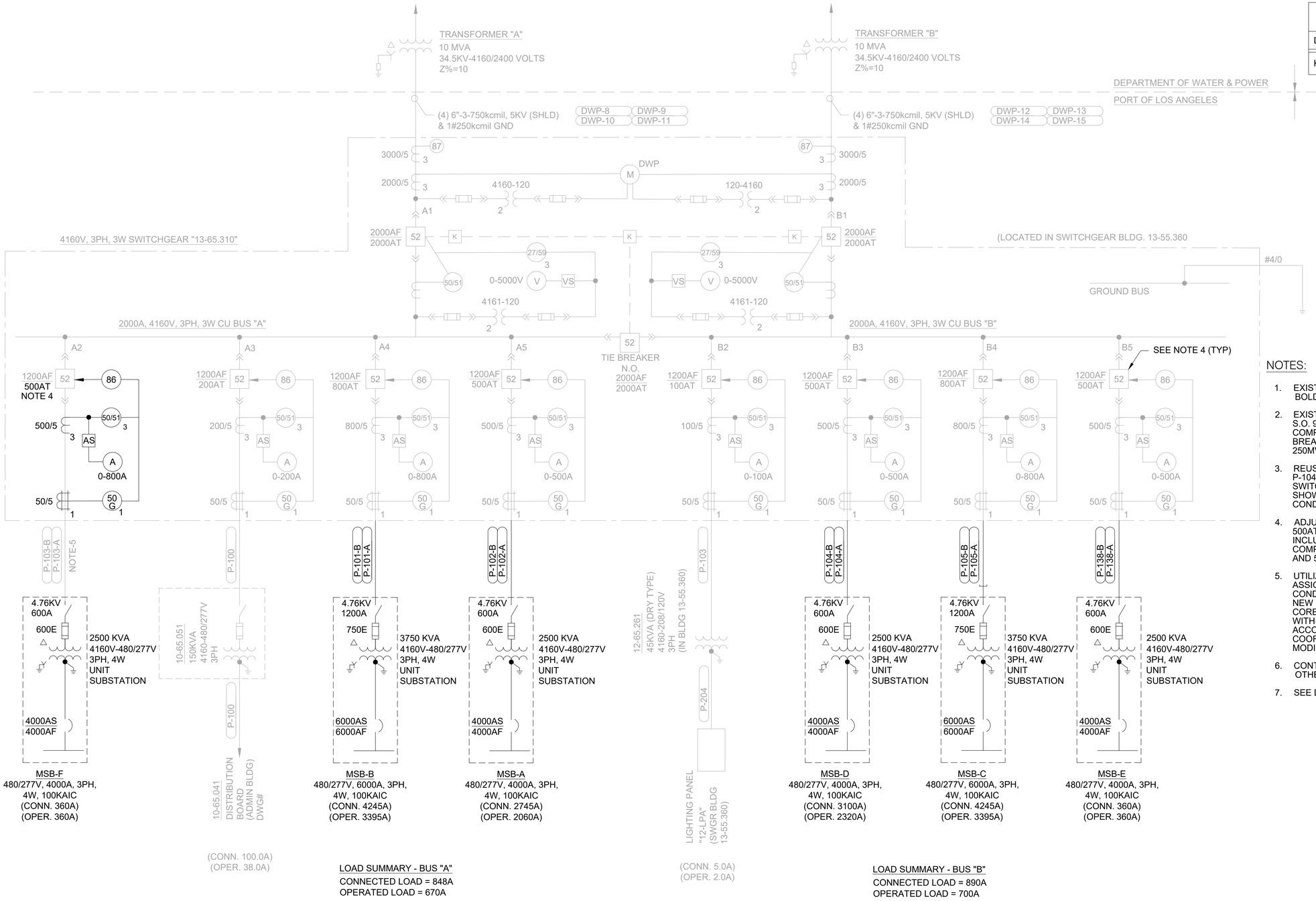

NOTES:

1. EXISTING ITEMS ARE SHOWN SCREENED. NEW WORK IS SHOWN BOLD.
2. EXISTING GE SWITCHGEAR , MODEL:POWERVAC, REQN 480-15835. S.O. 977567, DATED 1995. ALL NEW COMPONENTS SAHLL BE COMPATIBLE WITH EXISTING SWITCHGEAR. SWITCHGEAR BREAKER SHORT CIRCUIT CURRENT INTERRUPTING CAPACITY IS 250MVA.
3. REUSE EXISTING CONDUITS P-101-A, P-101B, P-102-A, P-102-B, P-104-A, P-104-B, P-105-A, P-105-B, AND P-138-A, P-138-B FROM SWITCHGEAR BUILDING TO EXISTING ELECTRICAL VAULTS AS SHOWN ON DRAWINGS. EXTEND TO NEW CONDUITS WITH SAME CONDUIT TAGS TO POWER RESPECTIVE UNIT SUBSTATION.
4. ADJUST TRIP SETTING OF EXISTING BREAKER IN CUBICLE A2 TO 500AT. PROVIDE COMPONENTS AND WIRING IN CUBICLE A2 INCLUDING C200 CLASS 500/5A CTS (3 EACH). TEST EXISTING COMPONENTS FOR FUNCTIONALITY INCLUDING LOCKOUT RELAYS AND 50/5A ZERO SEQUENCE CT.
5. UTILIZE CAPPED IN-SLAB CONDUITS WITHIN CUBICLE A2 AND ASSIGN CONDUIT TAG "P-103-A" AND "P-103-B". IF THE EXISTING CONDUITS ARE UNAVAILABLE, CONTRACTOR SHALL ROUTE THE NEW CONDUITS OVEHEAD WITHIN THE ELECTRICAL ROOM, CORE-DRILL THROUGH THE EXISTING WALLS AND TERMINATE WITHIN ELECTRICAL VAULT "MH-1". MODIFY THE SWITCHGEAR TO ACCOMODATE THE OVERHEAD CONDUITS. CONTRACTOR SHALL COORDINATE WITH ABB/GE FOR ALL SWITCHGEAR MODIFICATIONS.
6. CONTRACTOR SHALL COORDINATE DEPTH OF DUCTBANKS WITH OTHER SURROUNDING UTILITIES.
7. SEE DRAWINGS E-28 AND E-29 FOR TYPICAL DUCTBANK SECTION

E-20
E-20
SINGLE LINE DIAGRAM - SWITCHGEAR "13-65.310"
SCALE: NONE

NO.	DATE	DRAWN	REVISIONS -	CHK'D	APP'D
A	3/20/25	-	30% CONCEPTUAL DESIGN		
B	4/25/25	-	FINAL CONCEPTUAL DESIGN		
C	7/18/25	-	40% DESIGN		
D	9/19/25	-	80% DESIGN		

NOT FOR CONSTRUCTION

80% DESIGN REVIEW SEP 19 , 2025

Jacobs
2600 MICHELSON DRIVE, SUITE 500
IRVINE, CA 92612
T: (949) 224-7500
F: (949) 224-7501

REGISTERED PROFESSIONAL ENGINEER — ALEX MATHEWS — E 18650 EXP.12/31/2026 — ELECTRICAL — STATE OF CALIFORNIA

SCALE:	AS SHOWN
DRAWN:	R. SHARMA
CHECKED:	D. WAGNER
DESIGNED:	A. MATHEWS
	ENGINEER / ARCHITECT

TERMINAL ISLAND MARITIME SUPPORT FACILITY

SINGLE LINE DIAGRAM

THE PORT OF LOS ANGELES
ENGINEERING DIVISION
425 S. PALOS VERDES STREET SAN PEDRO CA 90731-3309

DRAWING NUMBER	SHEET NUMBER
1-3513	E-20

POLAPRO1_040223_BWD

Description	Unit	kW/Unit	Power Factor	kVA/Unit	Quantity	Connected Load (kVA)	Demand Factor	Demand Load (kVA)	Cumulative Total - BUS A: Connected Load (kVA)	Cumulative Total - BUS A: Demand Load (kVA)
			MSB-A							
Gate Facility	EA	200	1.000	200.000	1	200	0.800	160		
Roadability Canopy	EA	120	0.950	126.316	1	126	0.950	120		
High-Mast-Light Poles	EA	10	0.950	10.526	4	42	1.000	42		
Maintenance Canopy	SF	0.1	0.900	0.111	16,200	1,798	0.800	1,439		
Sewer Pump Station	HP	0.8	0.825	0.970	2	2	0.800	2		
				Sub-Total:		2,169		1,762		

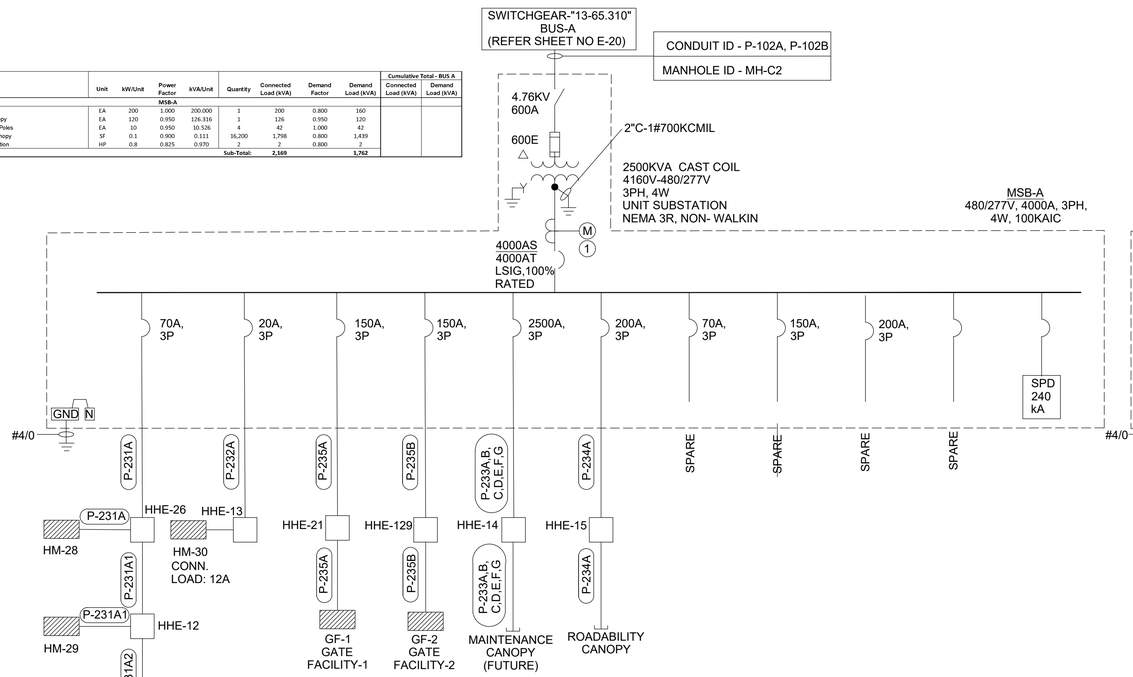

SINGLE LINE DIAGRAM - MSB-A

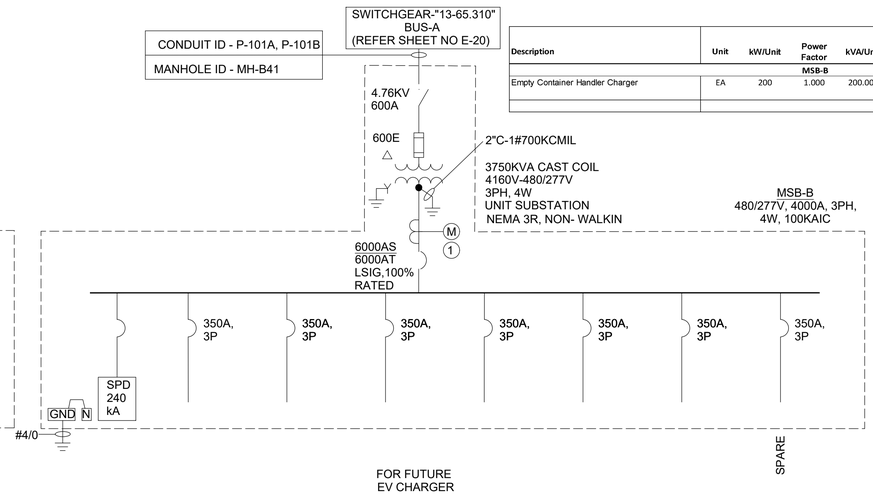

SINGLE LINE DIAGRAM - MSB-B

Description	Unit	kW/Unit	Power Factor	kVA/Unit	Quantity	Connected Load (kVA)	Demand Factor	Demand Load (kVA)	Cumulative Total - BUS A: Connected Load (kVA)	Cumulative Total - BUS A: Demand Load (kVA)
			MSB-B							
Empty Container Handler Charger	EA	200	1.000	200.000	15	3,000	0.900	2,700		
					Sub-Total:	3,000		2,700		

CONSTRUCTION NOTES:

① SQUARE D MODEL PM8244 POWER METER

GENERAL NOTES:

1. NEW WORK IS SHOWN BOLD.
2. NOT ALL MANHOLES AND PULLBOXES ARE SHOWN. SEE AREA PLANS FOR COMPLETE CONDUCTOR ROUTING DETAILS.

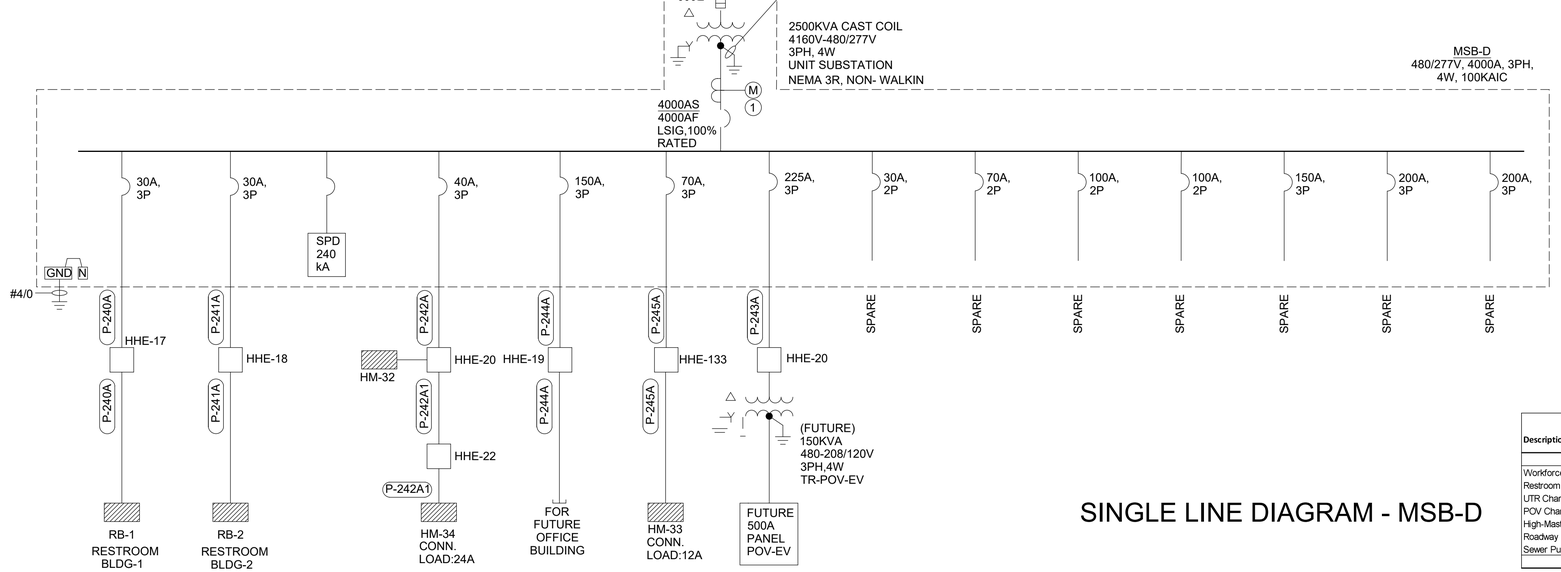

SINGLE LINE DIAGRAM - MSB-D

Description	Unit	kW/Unit	Power Factor	kVA/Unit	Quantity	Connected Load (kVA)	Demand Factor	Demand Load (kVA)	Cumulative Total - BUS A: Connected Load (kVA)	Cumulative Total - BUS A: Demand Load (kVA)
			MSB-D							
Workforce/Administration Building	SF	0.05	0.900	0.056	2,100	118	0.800	94		
Restroom Buildings	SF	0.05	0.900	0.056	200	11	0.800	9		
UTR Charger	EA	125	1.000	125.000	16	2,000	0.900	1,800		
POV Charging Stations	EA	8.3	1.000	8.300	12	100	0.800	80		
High-Mast-Light Poles	EA	10	0.950	10.526	3	32	1.000	32		
Roadway Lighting	EA	0.5	0.950	0.526	100	53	1.000	53		
Sewer Pump Station	HP	0.8	0.825	0.970	2	2	0.800	2		
					Sub-Total:	2,315		2,068		

NO.	DATE	DRAWN	REVISIONS -	CHK'D	APP'D
A	3/20/25	-	30% CONCEPTUAL DESIGN		
B	4/25/25	-	FINAL CONCEPTUAL DESIGN		
C	7/18/25	-	40% DESIGN		
D	9/19/25	-	80% DESIGN		

NOT FOR CONSTRUCTION

80% DESIGN REVIEW SEP 19 , 2025

Jacobs
300 N. LAKE AVENUE, SUITE 500
PASADENA, CA 91101
T: (949) 224-7500
F: (949) 224-7501

REGISTERED PROFESSIONAL ENGINEER — ALBERT MATHEWS — E 18650 EXP. 12/31/2026 — ELECTRICAL — STATE OF CALIFORNIA

SCALE: AS SHOWN
DRAWN: R. SHARMA
CHECKED: D. WAGNER
DESIGNED: A. MATHEWS
ENGINEER / ARCHITECT

TERMINAL ISLAND MARITIME SUPPORT FACILITY

SINGLE LINE DIAGRAM

THE PORT OF LOS ANGELES
ENGINEERING DIVISION
425 S. PALOS VERDES STREET SAN PEDRO CA 90731-3309

DRAWING NUMBER: 1-3513
SHEET NUMBER: E-21

POLAPRO1_040223_BWD

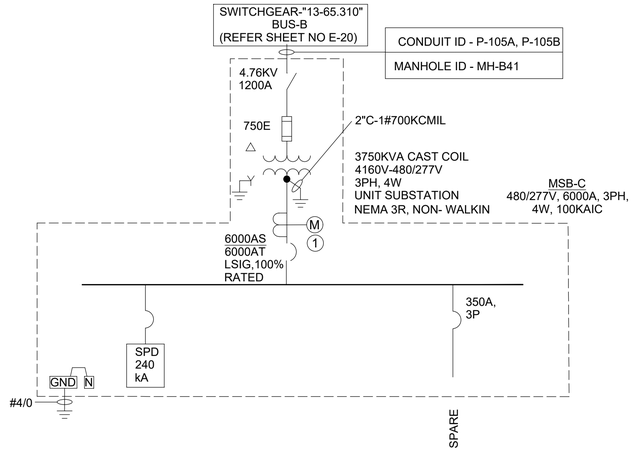

SINGLE LINE DIAGRAM - MSB-C

Description	Unit	kW/Unit	Power Factor	kVA/Unit	Quantity	Connected Load (kVA)	Demand Factor	Demand Load (kVA)	Cumulative Total - BUS A Connected Load (kVA)	Cumulative Total - BUS A Demand Load (kVA)
Empty Container Handler Charger	EA	200	1.000	200.000	15	3,000	0.900	2,700		
					Sub-Total:	3,000		2,700		

CONSTRUCTION NOTES:

① SQUARE D MODEL PM8244 POWER METER

GENERAL NOTES:

1. NEW WORK IS SHOWN BOLD.
2. NOT ALL MANHOLES AND PULLBOXES ARE SHOWN. SEE AREA PLANS FOR COMPLETE CONDUCTOR ROUTING DETAILS.

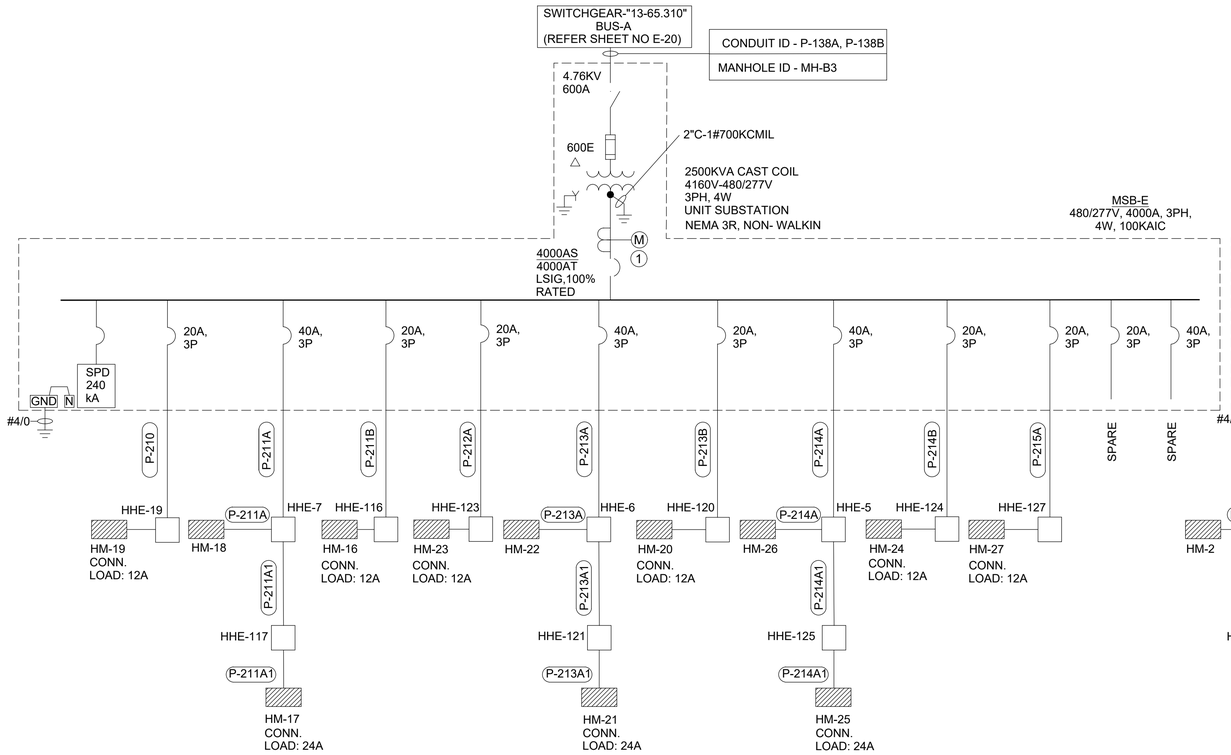

SINGLE LINE DIAGRAM - MSB-E

Description	Unit	kW/Unit	Power Factor	kVA/Unit	Quantity	Connected Load (kVA)	Demand Factor	Demand Load (kVA)	Cumulative Total - BUS A Connected Load (kVA)	Cumulative Total - BUS A Demand Load (kVA)
High-Mast-Light Poles	EA	10	0.950	10.526	12	126	1.000	126		
Spare Breakers - Future Loads										
					Sub-Total:	126		126	5,295	4,589

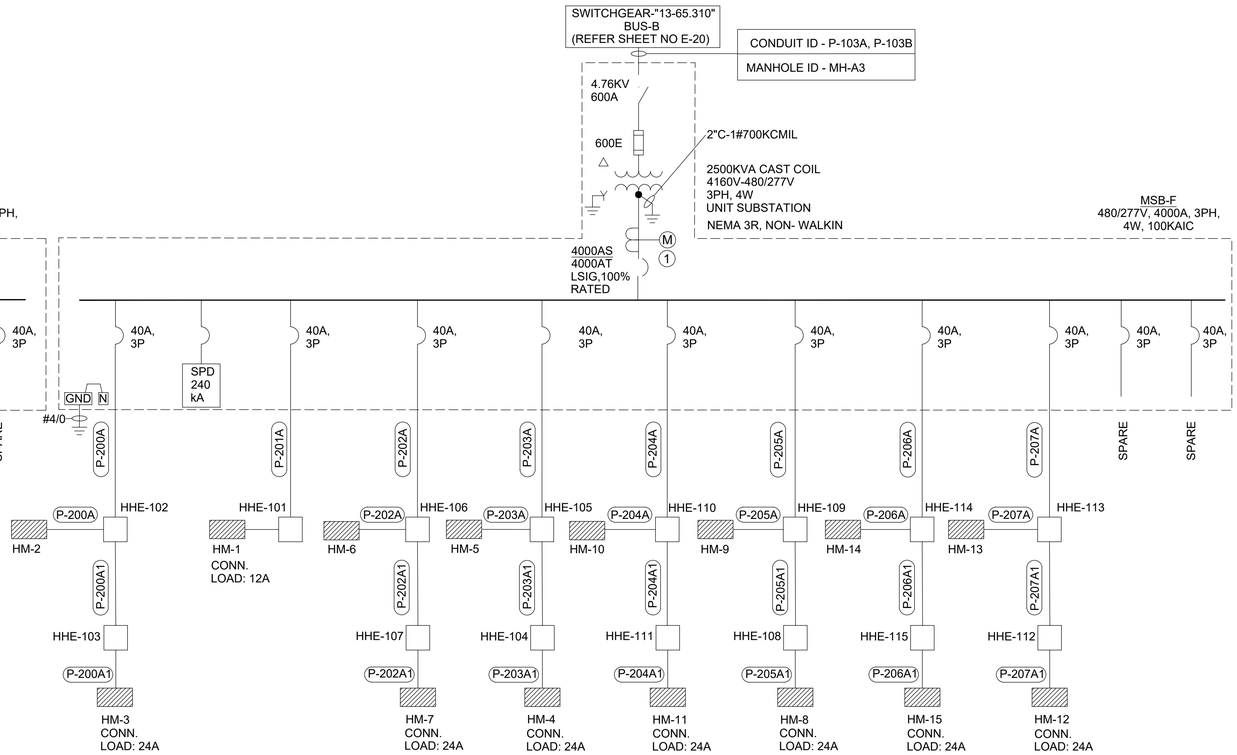

SINGLE LINE DIAGRAM - MSB-F

Description	Unit	kW/Unit	Power Factor	kVA/Unit	Quantity	Connected Load (kVA)	Demand Factor	Demand Load (kVA)	Cumulative Total - BUS A Connected Load (kVA)	Cumulative Total - BUS A Demand Load (kVA)
High-Mast-Light Poles	EA	10	0.950	10.526	15	158	1.000	158		
Spare Breakers - Future Loads										
					Sub-Total:	158		158	5,472	4,926

NO.	DATE	DRAWN	REVISIONS -	CHK'D	APP'D
A	3/20/25	-	30% CONCEPTUAL DESIGN		
B	4/25/25	-	FINAL CONCEPTUAL DESIGN		
C	7/18/25	-	40% DESIGN		
D	9/19/25	-	80% DESIGN		

NOT FOR CONSTRUCTION

NO.	DATE	DRAWN	REVISIONS -	CHK'D	APP'D

80% DESIGN REVIEW
SEP 19 , 2025

Jacobs
2600 MICHELSON DRIVE, SUITE 500
IRVINE, CA 92612
T: (949) 224-7500
F: (949) 224-7501

REGISTERED PROFESSIONAL ENGINEER
ABEY MATHEWS
E 18650
EXP. 12/31/2026
ELECTRICAL
STATE OF CALIFORNIA

SCALE: AS SHOWN
DRAWN: R. SHARMA
CHECKED: D. WAGNER
DESIGNED: A. MATHEWS
ENGINEER / ARCHITECT

TERMINAL ISLAND MARITIME SUPPORT FACILITY

SINGLE LINE DIAGRAM

THE PORT OF LOS ANGELES
ENGINEERING DIVISION
425 S. PALOS VERDES STREET SAN PEDRO CA 90731-3309

DRAWING NUMBER: 1-3513
SHEET NUMBER: E-22

POLAPRO1_040223_BWD

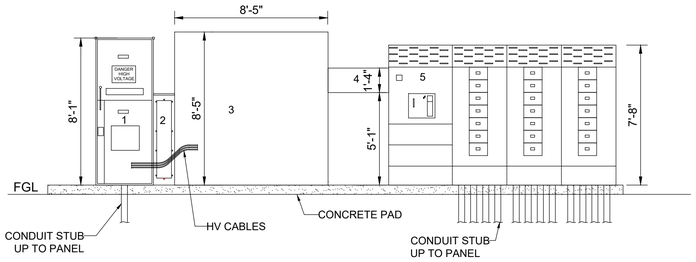

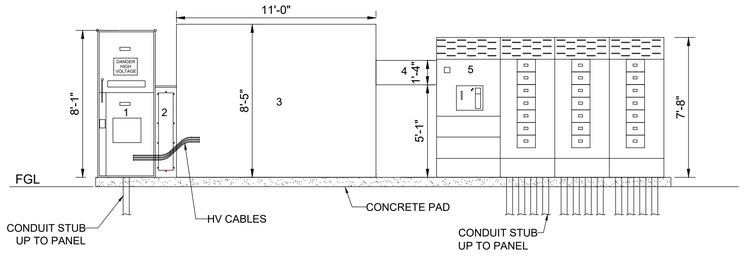

ELEVATION VIEW (MSB-A)

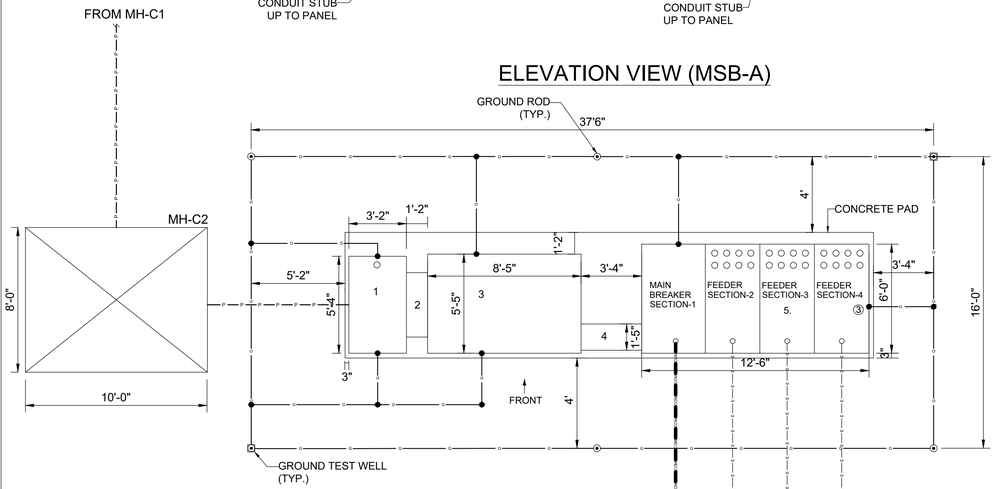

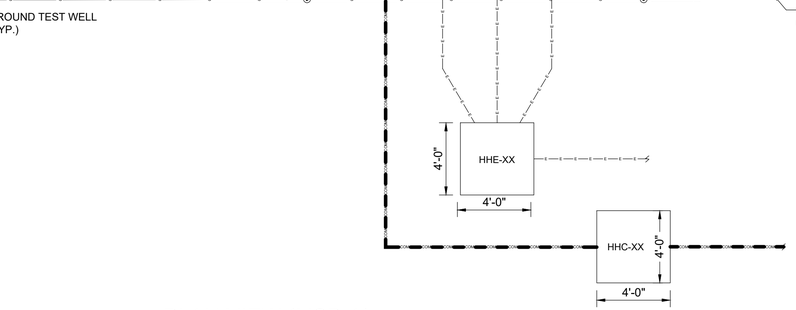

PLAN VIEW (MSB-A)

ELEVATION VIEW (MSB-B)

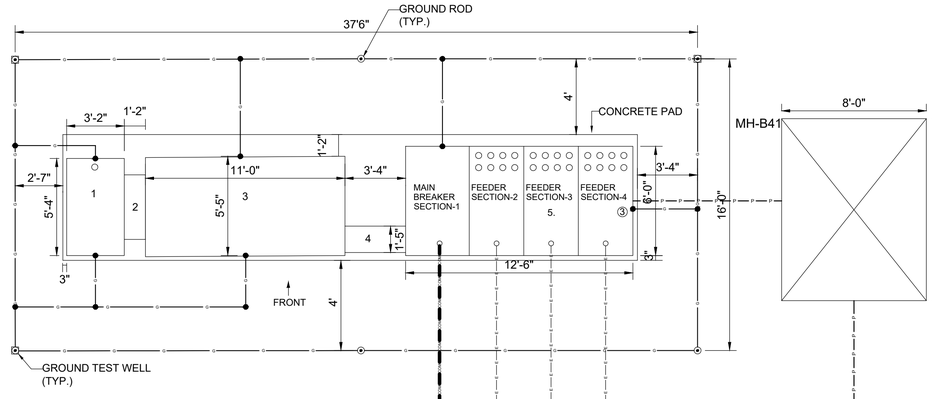

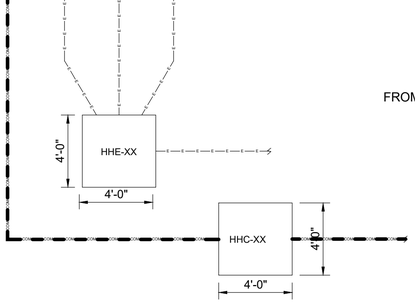

PLAN VIEW (MSB-B)

GENERAL NOTES:

1. ALL DIMENSIONS ARE IN FOOTS UNLESS OTHERWISE SPECIFIED.
2. ALL GROUND LOOP CONDUCTORS SHOWN ON THIS DRAWING ARE #4/0 BARE COPPER BURIED IN SOIL AT 3 FOOT DEPTH. ALL GROUND TAPS ARE #4/0 BARE COPPER. EXTEND AND COMPLETE GROUNDING PER DWG AND MANUFACTURER'S RECOMMENDATION.
3. FIELD CONFIRM LOCATIONS OF EQUIPMENT AND SAFE LOACTIONS TO DRIVE GROUND RODS TO AVOID HITTING BURIED STRUCTURES.
4. CONTRACTOR SHALL LAYOUT CONDUIT STUBS PER SHOP DRAWINGS. PROVIDE SHOP DRAWINGS FOR APPROVAL DETAILING LAYOUT OF PAD, DUCTBANK, EQUIPMENT AND UNDERGROUND STRUCTURES.
5. PROVIDE CAP, PLUG AND PULL ROPE AT CONDUITS FOR FUTURE.
6. BOLTED LUGS TO SWITCHGEAR GROUND BUS,TYP.

S.No.	EQUIPMENT (MSB-A)	DIMENSION
1	5kV HVL PRIMARY SWITCH	97(H)x38(W)x64(D)
2	TRANSITION SECTION	-
3	2500KVA TRANSFORMER	102(H)x102(W)x66(D)
4	BUS DUCT CONNECTION	-
5	LV SWITCHBOARD	93(H)x150(W)x72(D)

S.No.	EQUIPMENT (MSB-B)	DIMENSION
1	5kV HVL PRIMARY SWITCH	97(H)x38(W)x64(D)
2	TRANSITION SECTION	-
3	3750KVA TRANSFORMER	102(H)x126(W)x66(D)
4	BUS DUCT CONNECTION	-
5	LV SWITCHBOARD	93(H)x150(W)x72(D)

XX-XX / XX-XX PLAN
SCALE: 1" = 50'

N

NO.	DATE	DRAWN	REVISIONS -	CHK'D	APP'D
A	9/19/25	-	80% CONCEPTUAL DESIGN		
			NOT FOR CONSTRUCTION		

NO.	DATE	DRAWN	REVISIONS -	CHK'D	APP'D
			80% DESIGN REVIEW SEP 19 , 2025		

Jacobs
2800 MICHELSON DRIVE, SUITE 500
IRVINE, CA 92612
T: (949) 224-7500
F: (949) 224-7501

REGISTERED PROFESSIONAL ENGINEER — ARET MATHEWS — E 18550 EXP. 12/31/2026 — ELECTRICAL — STATE OF CALIFORNIA

SCALE: AS SHOWN
DRAWN: R. SHARMA
CHECKED: D. WAGNER
DESIGNED: A. MATHEWS
ENGINEER / ARCHITECT

TERMINAL ISLAND MARITIME SUPPORT FACILITY

ELECTRICAL ENLARGED PLAN - UNIT SUBSTATION

THE PORT OF LOS ANGELES
ENGINEERING DIVISION
425 S. PALOS VERDES STREET SAN PEDRO CA 90731-3309

DRAWING NUMBER: 1-3513
SHEET NUMBER: E-23

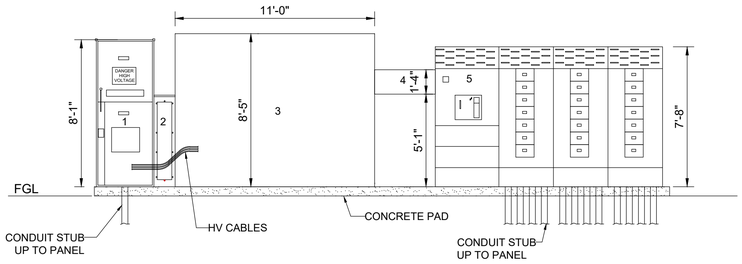

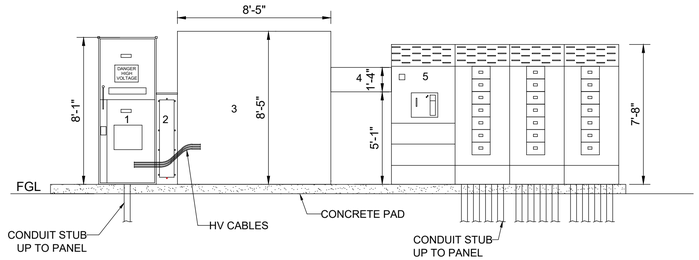

ELEVATION VIEW (MSB-C)

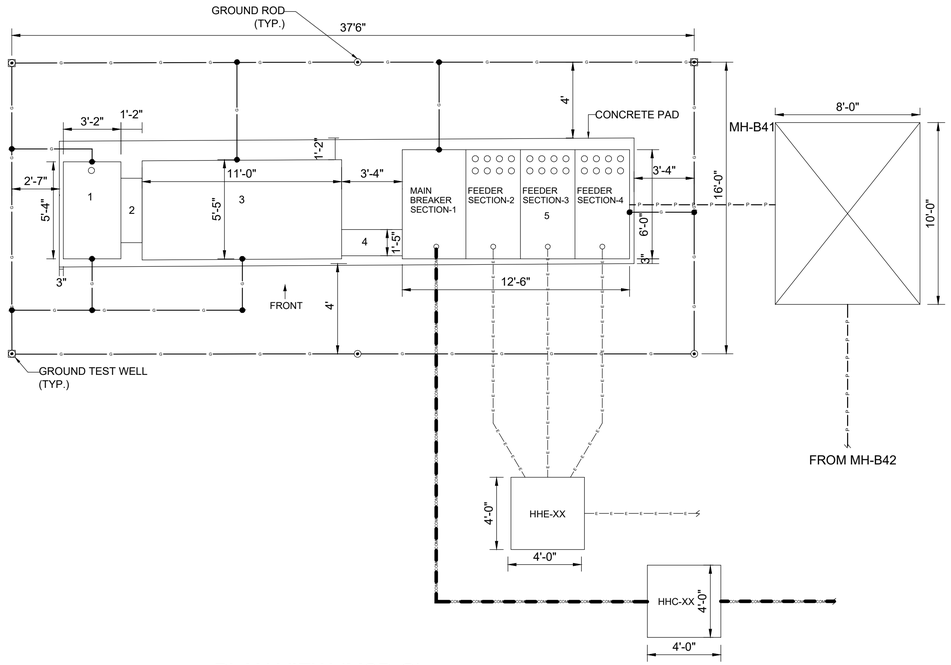

PLAN VIEW (MSB-C)

ELEVATION VIEW (MSB-D)

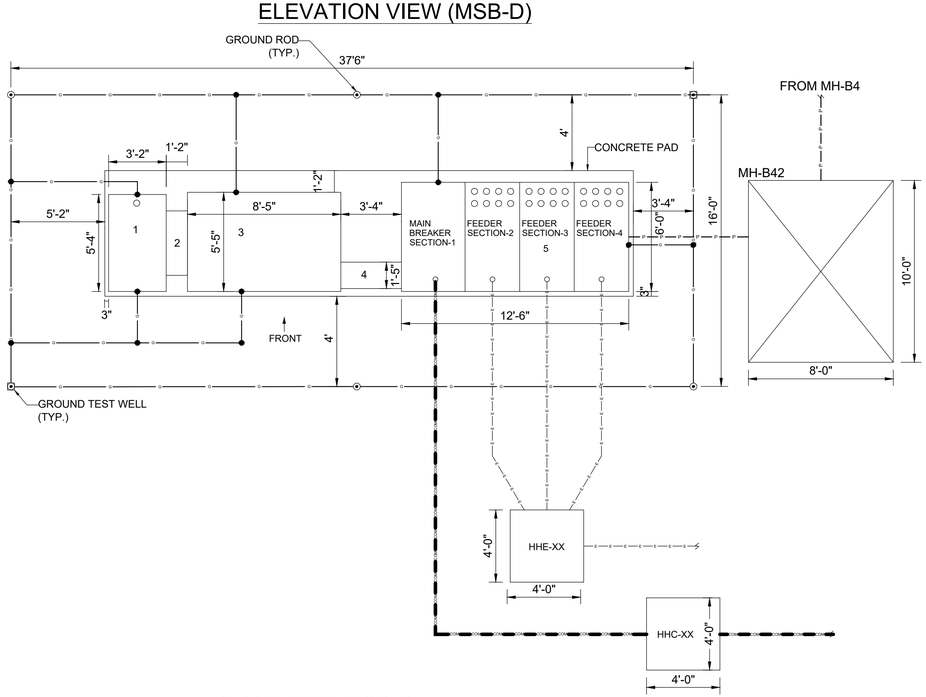

PLAN VIEW (MSB-D)

GENERAL NOTES:

1. ALL DIMENSIONS ARE IN FOOTS UNLESS OTHERWISE SPECIFIED.
2. ALL GROUND LOOP CONDUCTORS SHOWN ON THIS DRAWING ARE #4/0 BARE COPPER BURIED IN SOIL AT 3 FOOT DEPTH. ALL GROUND TAPS ARE #4/0 BARE COPPER. EXTEND AND COMPLETE GROUNDING PER DWG AND MANUFACTURER'S RECOMMENDATION.
3. FIELD CONFIRM LOCATIONS OF EQUIPMENT AND SAFE LOACTIONS TO DRIVE GROUND RODS TO AVOID HITTING BURIED STRUCTURES.
4. CONTRACTOR SHALL LAYOUT CONDUIT STUBS PER SHOP DRAWINGS. PROVIDE SHOP DRAWINGS FOR APPROVAL DETAILING LAYOUT OF PAD, DUCTBANK, EQUIPMENT AND UNDERGROUND STRUCTURES.
5. PROVIDE CAP, PLUG AND PULL ROPE AT CONDUITS FOR FUTURE.
6. BOLTED LUGS TO SWITCHGEAR GROUND BUS,TYP.

S.No.	EQUIPMENT (MSB-C)	DIMENSION
1	5kV HVL PRIMARY SWITCH	97(H)x38(W)x64(D)
2	TRANSITION SECTION	-
3	3750kVA TRANSFORMER	102(H)x126(W)x66(D)
4	BUS DUCT CONNECTION	-
5	LV SWITCHBOARD	93(H)x150(W)x72(D)

S.No.	EQUIPMENT (MSB-D)	DIMENSION
1	5kV HVL PRIMARY SWITCH	97(H)x38(W)x64(D)
2	TRANSITION SECTION	-
3	2500KVA TRANSFORMER	102(H)x102(W)x66(D)
4	BUS DUCT CONNECTION	-
5	LV SWITCHBOARD	93(H)x150(W)x72(D)

XX-XX / XX-XX PLAN
SCALE: 1" = 50'

N

NO.	DATE	DRAWN	REVISIONS -	CHK'D	APP'D
A	9/19/25	-	80% CONCEPTUAL DESIGN		

NOT FOR CONSTRUCTION

NO.	DATE	DRAWN	REVISIONS -	CHK'D	APP'D
			80% DESIGN REVIEW SEP 19 , 2025		

Jacobs
2600 MICHELSON DRIVE, SUITE 500
IRVINE, CA 92612
T: (949) 224-7500
F: (949) 224-7501

REGISTERED PROFESSIONAL ENGINEER — ALEY MATHEWS — E 18550 EXP. 12/31/2026 — ELECTRICAL — STATE OF CALIFORNIA

SCALE: AS SHOWN
DRAWN: R. SHARMA
CHECKED: D. WAGNER
DESIGNED: A. MATHEWS
ENGINEER / ARCHITECT

TERMINAL ISLAND MARITIME SUPPORT FACILITY

ELECTRICAL ENLARGED PLAN - UNIT SUBSTATION

THE PORT OF LOS ANGELES
ENGINEERING DIVISION
425 S. PALOS VERDES STREET SAN PEDRO CA 90731-3309

DRAWING NUMBER: 1-3513
SHEET NUMBER: E-24

POLAPRO1_04.0223_BWD

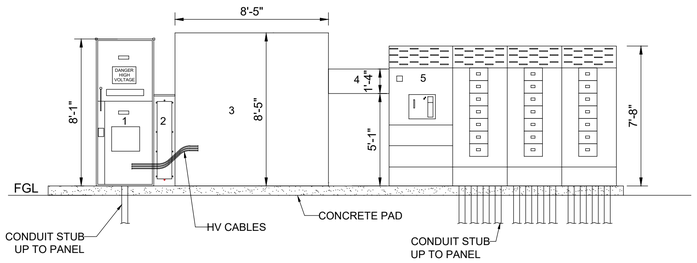

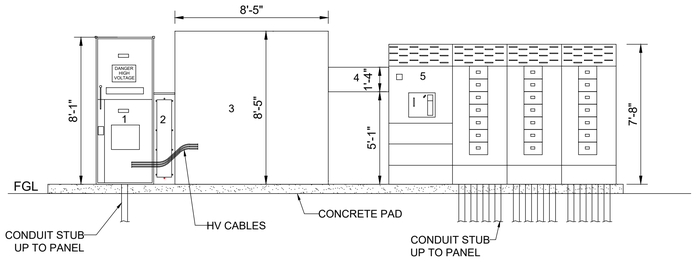

ELEVATION VIEW (MSB-E)

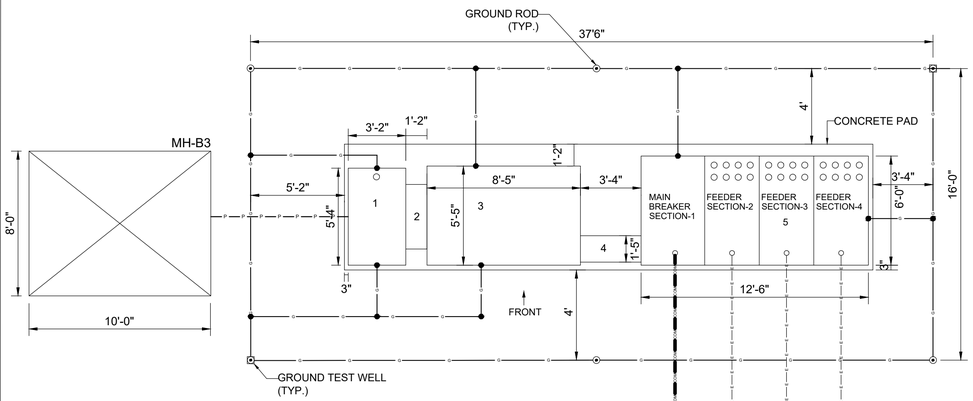

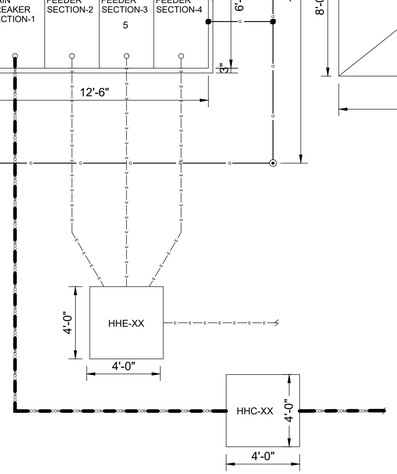

PLAN VIEW (MSB-E)

ELEVATION VIEW (MSB-F)

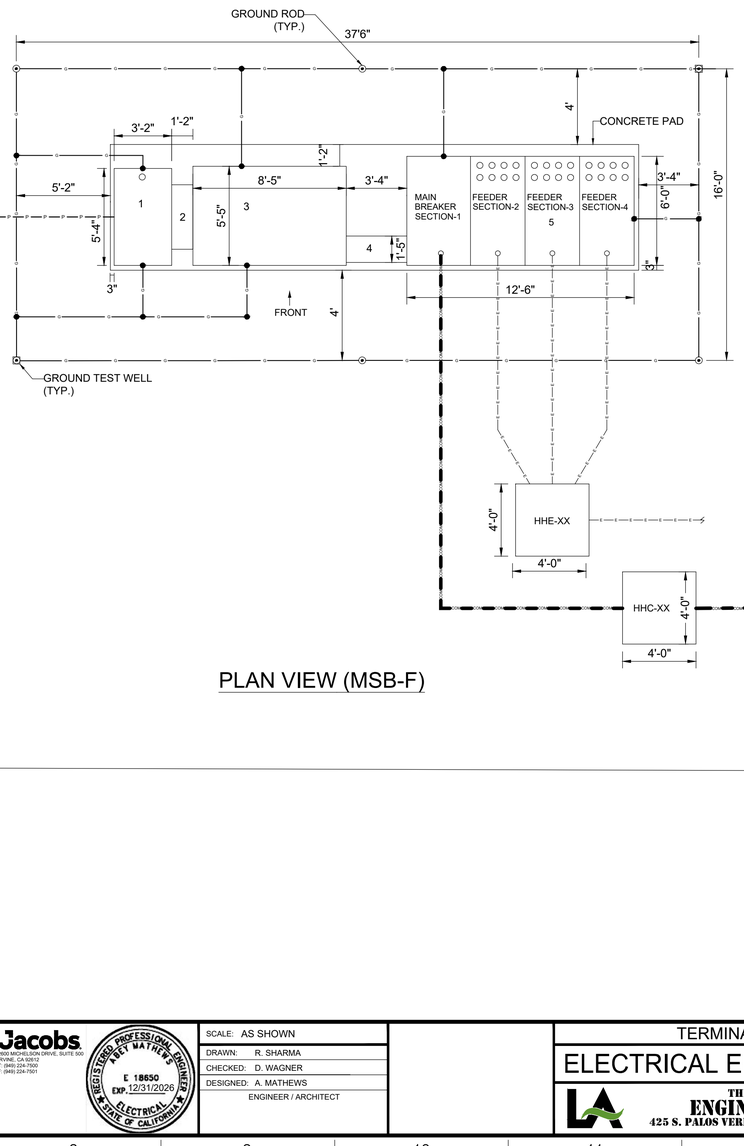

PLAN VIEW (MSB-F)

GENERAL NOTES:

1. ALL DIMENSIONS ARE IN FOOTS UNLESS OTHERWISE SPECIFIED.
2. ALL GROUND LOOP CONDUCTORS SHOWN ON THIS DRAWING ARE #4/0 BARE COPPER BURIED IN SOIL AT 3 FOOT DEPTH. ALL GROUND TAPS ARE #4/0 BARE COPPER. EXTEND AND COMPLETE GROUNDING PER DWG AND MANUFACTURER'S RECOMMENDATION.
3. FIELD CONFIRM LOCATIONS OF EQUIPMENT AND SAFE LOACTIONS TO DRIVE GROUND RODS TO AVOID HITTING BURIED STRUCTURES.
4. CONTRACTOR SHALL LAYOUT CONDUIT STUBS PER SHOP DRAWINGS. PROVIDE SHOP DRAWINGS FOR APPROVAL DETAILING LAYOUT OF PAD, DUCTBANK, EQUIPMENT AND UNDERGROUND STRUCTURES.
5. PROVIDE CAP, PLUG AND PULL ROPE AT CONDUITS FOR FUTURE.
6. BOLTED LUGS TO SWITCHGEAR GROUND BUS,TYP.

S.No.	EQUIPMENT (MSB-E)	DIMENSION
1	5kV HVL PRIMARY SWITCH	97(H)x38(W)x64(D)
2	TRANSITION SECTION	-
3	2500kVA TRANSFORMER	102(H)x102(W)x66(D)
4	BUS DUCT CONNECTION	-
5	LV SWITCHBOARD	93(H)x150(W)x72(D)

S.No.	EQUIPMENT (MSB-F)	DIMENSION
1	5kV HVL PRIMARY SWITCH	97(H)x38(W)x64(D)
2	TRANSITION SECTION	-
3	2500kVA TRANSFORMER	102(H)x102(W)x66(D)
4	BUS DUCT CONNECTION	-
5	LV SWITCHBOARD	93(H)x150(W)x72(D)

XX-XX / XX-XX PLAN
SCALE: 1" = 50'

N

NO.	DATE	DRAWN	REVISIONS -	CHK'D	APP'D
A	9/19/25	-	80% CONCEPTUAL DESIGN		

NOT FOR CONSTRUCTION

NO.	DATE	DRAWN	REVISIONS -	CHK'D	APP'D
			80% DESIGN REVIEW SEP 19 , 2025		

Jacobs
2600 MICHELSON DRIVE, SUITE 500
IRVINE, CA 92612
T: (949) 224-7500
F: (949) 224-7501

REGISTERED PROFESSIONAL ENGINEER — MET MATHEWS — E 18650 EXP. 12/31/2026 — ELECTRICAL — STATE OF CALIFORNIA

SCALE:	AS SHOWN
DRAWN:	R. SHARMA
CHECKED:	D. WAGNER
DESIGNED:	A. MATHEWS
	ENGINEER / ARCHITECT

TERMINAL ISLAND MARITIME SUPPORT FACILITY

ELECTRICAL ENLARGED PLAN - UNIT SUBSTATION

THE PORT OF LOS ANGELES
ENGINEERING DIVISION
425 S. PALOS VERDES STREET SAN PEDRO CA 90731-3309

DRAWING NUMBER	SHEET NUMBER
1-3513	E-25

POLAPROT_043023_BWD

CONDUIT NUMBER	CONDUIT SIZE	CONDUIT TYPE	CONDUCTOR QTY	CONDUCTOR SIZE	CONDUCTOR GND	CONDUCTOR VOLT	FROM	VIA	TO	REMARKS
P-100 (EXIST)	4	PVC	3	4/0 AWG	#2	5000	DWP SS	MH-1,3,4	ADMIN BLDG, MAINTENANCE BLDG	EXISTING CONDUIT AND CONDUCTORS, PROTECT IN PLACE
P-101-A (EXIST)	4	PVC	3	750 kcmil	2/0	5000	DWP SS	MH-1,3,4	MH-C0	EXISTING CONDUIT PROTECT IN PLACE
P-101-B (EXIST)	4	PVC	3	750 kcmil	2/0	5000	DWP SS	MH-1,3,4	MH-C0	EXISTING CONDUIT PROTECT IN PLACE
P-102A (EXIST)	4	PVC	3	350 kcmil	2	5000	DWP SS	MH-1,3,4	MSB-C0	EXISTING CONDUIT PROTECT IN PLACE
P-102B (EXIST)	4	PVC	3	350 kcmil	2	5000	DWP SS	MH-1,3,4	MSB-C0	EXISTING CONDUIT PROTECT IN PLACE
P-103A (EXIST)	4	PVC	3	750 kcmil	2/0	5000	DWP SS	MH-1	MSB-A1	EXISTING CONDUIT PROTECT IN PLACE
P-103B (EXIST)	4	PVC	3	750 kcmil	2/0	5000	DWP SS	MH-1	MSB-A1	EXISTING CONDUIT PROTECT IN PLACE
P-104A (EXIST)	4	PVC	3	350 kcmil	2	5000	DWP SS	MH-1,3,4	MSB-C0	EXISTING CONDUIT PROTECT IN PLACE
P-104B (EXIST)	4	PVC	3	350 kcmil	2	5000	DWP SS	MH-1,3,4	MSB-C0	EXISTING CONDUIT PROTECT IN PLACE
P-105A (EXIST)	4	PVC	3	750 kcmil	2/0	5000	DWP SS	MH-1,2,3	MSB-C0	EXISTING CONDUIT PROTECT IN PLACE
P-105B (EXIST)	4	PVC	3	750 kcmil	2/0	5000	DWP SS	MH-1,2,3	MSB-C0	EXISTING CONDUIT PROTECT IN PLACE
P-138A (EXIST)	4	PVC	3	500 kcmil	1/0	5000	DWP SS	MH-1,2,3	MSB-C0	EXISTING CONDUIT PROTECT IN PLACE
P-138B (EXIST)	4	PVC	3	500 kcmil	1/0	5000	DWP SS	MH-1,2,3	MSB-C0	EXISTING CONDUIT PROTECT IN PLACE
P-101A	5	PVC	3	750 kcmil	2/0	5000	MH-C0	MH-B1,B2,B3,B4,B42,B41	MSB-B	
P-101B	5	PVC	3	750 kcmil	2/0	5000	MH-C0	MH-B1,B2,B3,B4,B42,B41	MSB-B	
P-102A	5	PVC	3	350 kcmil	2	5000	MH-C0	MH-C1,C2	MSB-A	
P-102B	5	PVC	3	350 kcmil	2	5000	MH-C0	MH-C1,C2	MSB-A	
P-103A	5	PVC	3	750 kcmil	2/0	5000	MH-A1	MH-A2,A3	MSB-F	
P-103B	5	PVC	3	750 kcmil	2/0	5000	MH-A1	MH-A2,A3	MSB-F	
P-104A	5	PVC	3	350 kcmil	2	5000	MH-C0	MH-B1,B2,B3,B4,B42	MSB-D	
P-104B	5	PVC	3	350 kcmil	2	5000	MH-C0	MH-B1,B2,B3,B4,B42	MSB-D	
P-105A	5	PVC	3	750 kcmil	2/0	5000	MH-C0	MH-B1,B2,B3,B4,B42,B41	MSB-C	
P-105B	5	PVC	3	750 kcmil	2/0	5000	MH-C0	MH-B1,B2,B3,B4,B42,B41	MSB-C	
P-138A	5	PVC	3	500 kcmil	1/0	5000	MH-C0	MH-B1,B2,B3	MSB-E	
P-138B	5	PVC	3	500 kcmil	1/0	5000	MH-C0	MH-B1,B2,B3	MSB-E	
SP-101A	5	PVC	-	-	-	-	MH-C0	MH-B1,B2,B3,B4,B42,B41	MSB-B	
SP-102A	5	PVC	-	-	-	-	MH-C0	MH-C1,C2	MSB-A	
SP-103A	5	PVC	-	-	-	-	MH-A1	MH-A2,A3	MSB-F	
SP-104A	5	PVC	-	-	-	-	MH-C0	MH-B1,B2,B3,B4,B42	MSB-D	
SP-105A	5	PVC	-	-	-	-	MH-C0	MH-B1,B2,B3,B4,B42,B41	MSB-C	
SP-138A	5	PVC	-	-	-	-	MH-C0	MH-B1,B2,B3	MSB-E	
SP-100A	5	PVC	-	-	-	-	MH-B41	MH-C3,C4	MH-C2	
SP-100B	5	PVC	-	-	-	-	MH-B41	MH-C3,C4	MH-C2	
SP-100C	5	PVC	-	-	-	-	MH-B4	MH-A4	MH-A3	
SP-100D	5	PVC	-	-	-	-	MH-B4	MH-A4	MH-A3	
SP-100E	5	PVC	-	-	-	-	MH-A1	MH-A2,A3	MSB-F	
SP-100F	5	PVC	-	-	-	-	MH-C0	MH-C1,C2	MSB-A	
SP-100G	5	PVC	-	-	-	-	MH-B1	-	MH-A1	
SP-100H	5	PVC	-	-	-	-	MH-B1	-	MH-A1	
SP-100I	5	PVC	-	-	-	-	MH-1(EXT)	-	MH-A1	

MANHOLE AND HANDHOLE SCHEDULE				
NO.	SIZE (INTERIOR) WxLxH	COVER - NOMENCLATURE	NORTHING	EASTING
HHE-01	24x36x65	UTR-EV-POWER		
HHE-02	17x30x58	HM-POWER		
HHE-03	17x30x58	HM-POWER		
HHE-04	17x30x58	HM-04-POWER		
HHE-05	17x30x58	RC-POWER		
HHE-08	24x36x63	FL-EV-POWER		
HHE-09	24x36x69	FL-EV-POWER		
HHE-10	30x48x69	FL-EV-POWER		
HHE-11	48x48x82	FL-EV-POWER		
HHE-14	24x36x65	MC-POWER		
HHE-15	24x36x80	POWER		
HHE-16	24x36x65	UTR-EV-POWER		
HHE-17	17x30x58	RESTROOM-POWER		
HHE-18	17x30x58	HM-18-POWER		
HHE-19	17x30x58	OFFICE-POWER		
HHE-20	17x30x58	POU-EV-POWER		
HHE-21	17x30x58	GUARD BOOTH-POWER		
HHE-23	24x36x63	FL-EV-POWER		
HHE-24	24x36x69	FL-EV-POWER		
HHE-25	48x48x82	FL-EV-POWER		
HHE-27	24x36x68	POWER		
HHE-28	17x30x58	SUMP-POWER		
HHE-101	17x30x58	HM-01-POWER		
HHE-102	17x30x58	HM-02-POWER		
HHE-103	17x30x58	HM-03-POWER		
HHE-104	17x30x58	HM-04-POWER		
HHE-105	17x30x58	HM-05-POWER		
HHE-106	17x30x58	HM-06-POWER		
HHE-107	17x30x58	HM-07-POWER		
HHE-108	17x30x58	HM-08-POWER		
HHE-109	17x30x58	HM-09-POWER		
HHE-110	17x30x58	HM-10-POWER		
HHE-111	17x30x58	HM-11-POWER		
HHE-112	17x30x58	HM-12-POWER		
HHE-113	17x30x58	HM-13-POWER		
HHE-114	17x30x58	HM-14-POWER		
HHE-115	17x30x58	HM-15-POWER		
HHE-116	17x30x58	HM-16-POWER		
HHE-117	17x30x58	HM-17-POWER		
HHE-118	17x30x58	HM-POWER		
HHE-119	17x30x58	HM-19-POWER		
HHE-120	17x30x58	HM-20-POWER		
HHE-121	17x30x58	HM-21-POWER		
HHE-122	24x36x65	HM-POWER		
HHE-123	17x30x58	HM-23-POWER		
HHE-124	17x30x58	HM-24-POWER		
HHE-125	17x30x58	HM-POWER		
HHE-126	24x36x55	HM-POWER		
HHE-127	17x30x58	HM-27-POWER		
HHE-128	17x30x65	HM-28-POWER		
HHE-129	17x30x65	HM-29-POWER		
HHE-130	17x30x58	HM-30-POWER		
HHE-131	17x30x58	HM-31-POWER		
HHE-132	17x30x58	HM-32-POWER		
HHE-133	17x30x58	HM-17-POWER		
HHE-134	17x30x58	HM-34-POWER		

MANHOLE AND HANDHOLE SCHEDULE				
NO.	SIZE (INTERIOR) WxLxH	COVER - NOMENCLATURE	NORTHING	EASTING
HHC-1	24x36x52	GUARD BOOTH-FIBER		
HHC-2	24x36x52	HM-30-FIBER		
HHC-3	24x36x52	HM-29-FIBER		
HHC-4	24x36x52	HM-31-FIBER		
HHC-5	24x36x52	FL-EV-FIBER		
HHC-6	24x36x60	FL-EV-FIBER		
HHC-7	24x36x60	FIBER		
HHC-8	24x36x60	FL-EV-FIBER		
HHC-9	24x36x60	FL-EV-FIBER		
HHC-10	24x36x60	FL-EV-FIBER		
HHC-11	24x36x60	FL-EV-FIBER		
HHC-12	24x36x52	FL-EV-FIBER		
HHC-13	24x36x52	HM-13-FIBER		
HHC-14	24x36x52	FIBER		
HHC-15	24x36x52	RESTROOM-FIBER		
HHC-16	24x36x60	FIBER		
HHC-17	24x36x52	OFFICE-FIBER		
HHC-18	24x36x52	RESTROOM-FIBER		
HHC-19	24x36x60	POU-EV-FIBER		
HHC-20	24x36x52	HM-20-FIBER		
HHC-21	24x36x52	HM-28-FIBER		
HHC-22	24x36x52	FIBER		
HHC-23	24x36x52	RC-FIBER		
HHC-24	24x36x60	HM-32-FIBER		
HHC-25	24x36x60	HM-31-FIBER		
HHC-26	24x36x52	FIBER		
HHC-27	24x36x60	HM-15-FIBER		
HHC-28	24x36x52	HM-25-FIBER		
HHC-29	24x36x52	HM-24-FIBER		
HHC-30	24x36x52	FIBER		
HHC-31	24x36x52	HM-11-FIBER		
HHC-32	24x36x52	HM-10-FIBER		
HHC-33	24x36x60	FIBER		
HHC-34	24x36x52	HM-9-FIBER		
HHC-35	24x36x60	HM-14-FIBER		
HHC-36	24x36x52	FIBER		
HHC-37	24x36x52	HM-13-FIBER		
HHC-38	24x36x52	HM-12-FIBER		
HHC-39	24x36x52	HM-8-FIBER		
HHC-40	24x36x52	HM-26-FIBER		
HHC-41	24x36x52	FIBER		
HHC-42	24x36x52	FIBER		
HHC-43	24x36x60	FIBER		
HHC-44	24x36x52	HM-18-FIBER		
HHC-45	24x36x52	SUMP PUMP-FIBER		
HHC-46	24x36x52	HM-23-FIBER		
HHC-47	24x36x52	HM-22-FIBER		
HHC-48	24x36x52	HM-19-FIBER		
HHC-49	24x36x52	HM-18-FIBER		
HHC-50	24x36x52	HM-21-FIBER		
HHC-51	24x36x52	HM-20-FIBER		
HHC-52	24x36x52	HM-17-FIBER		
HHC-53	24x36x52	HM-16-FIBER		
HHC-54	24x36x52	FIBER		
HHC-55	24x36x60	FIBER		
HHC-56	24x36x60	FIBER		
HHC-57	24x36x52	HM-7-FIBER		
HHC-58	24x36x52	HM-6-FIBER		
HHC-59	24x36x60	FIBER		
HHC-60	24x36x52	HM-5-FIBER		
HHC-61	24x36x52	HM-3-FIBER		
HHC-62	24x36x52	HM-2-FIBER		
HHC-63	24x36x60	FIBER		
HHC-64	24x36x52	HM-1-FIBER		
HHC-65	24x36x60	FIBER		
HHC-66	24x36x52	HM-4-FIBER		

NO.	DATE	DRAWN	REVISIONS -	CHK'D	APP'D
A	3/20/25	-	30% CONCEPTUAL DESIGN		
B	4/25/25	-	FINAL CONCEPTUAL DESIGN		
C	7/18/25	-	40% DESIGN		
D	9/19/25	-	80% DESIGN		

NOT FOR CONSTRUCTION

NO.	DATE	DRAWN	REVISIONS -	CHK'D	APP'D

80% DESIGN REVIEW SEP 19 , 2025

Jacobs
2050 MICHELSON DRIVE, SUITE 300
IRVINE, CA 92612
T: (949) 224-7500
F: (949) 224-7501

REGISTERED PROFESSIONAL ENGINEER ABEY MATHEWS E 18650 EXP. 12/31/2026 ELECTRICAL STATE OF CALIFORNIA

SCALE: AS SHOWN
DRAWN: R. SHARMA
CHECKED: D. WAGNER
DESIGNED: A. MATHEWS
ENGINEER / ARCHITECT

TERMINAL ISLAND MARITIME SUPPORT FACILITY

CONDUIT SCHEDULE

THE PORT OF LOS ANGELES
ENGINEERING DIVISION
425 S. PALOS VERDES STREET SAN PEDRO CA 90731-3309

DRAWING NUMBER: 1-3513
SHEET NUMBER: E-26

POLAPRO1_040223_BWD

CONDUIT NUMBER	CONDUIT SIZE	CONDUIT TYPE	CONDUCTOR QTY	CONDUCTOR SIZE	CONDUCTOR GND	CONDUCTOR VOLT	FROM	VIA	TO	REMARKS
P-200A	2	PVC	4	2 AWG	8 AWG	600	MSB-F	HHE-1,2,3,102	HM-2	
P-200A1	2	PVC	4	2 AWG	8 AWG	600	HHE-102	HHE-103	HM-3	
P-201A	2	PVC	4	6 AWG	10 AWG	600	MSB-F	HHE-1,2,3,101	HM-1	
P-202A	2	PVC	4	4 AWG	8 AWG	600	MSB-F	HHE-1,2, 106	HM-6	
P-202A1	2	PVC	4	4 AWG	8 AWG	600	HHE-106	HHE-107	HM-7	
P-203A	2	PVC	4	4 AWG	8 AWG	600	MSB-F	HHE-1,2, 105	HM-5	
P-203A1	2	PVC	4	4 AWG	8 AWG	600	HHE-105	HHE-104	HM-4	
P-204A	2	PVC	4	4 AWG	8 AWG	600	MSB-F	HHE-110	HM-10	
P-204A1	2	PVC	4	4 AWG	8 AWG	600	HHE-110	HHE-111	HM-11	
P-205A	2	PVC	4	6 AWG	10 AWG	600	MSB-F	HHE-1,109	HM-9	
P-205A1	2	PVC	4	6 AWG	10 AWG	600	HHE-109	HHE-108	HM-8	
P-206A	2	PVC	4	2 AWG	8 AWG	600	MSB-F	HHE-1,4,114	HM-14	
P-206A1	2	PVC	4	2 AWG	8 AWG	600	HHE-114	HHE-115	HM-15	
P-207A	2	PVC	4	4 AWG	8 AWG	600	MSB-F	HHE-1,4,113	HM-13	
P-207A1	2	PVC	4	4 AWG	8 AWG	600	HHE-113	HHE-112	HM-12	
SP-200A	2	PVC	-	-	-	600	MSB-F	HHE-1,2,3,102	HM-2	SPARE
SP-200A1	2	PVC	-	-	-	600	HHE-102	HHE-103	HM-3	SPARE
SP-201A	2	PVC	-	-	-	600	MSB-F	HHE-1,2,3,101	HM-1	SPARE
SP-202A	2	PVC	-	-	-	600	MSB-F	HHE-1,2, 106	HM-6	SPARE
SP-202A1	2	PVC	-	-	-	600	HHE-106	HHE-107	HM-7	SPARE
SP-203A	2	PVC	-	-	-	600	MSB-F	HHE-1,2, 105	HM-5	SPARE
SP-203A1	2	PVC	-	-	-	600	HHE-105	HHE-104	HM-4	SPARE
SP-204A	2	PVC	-	-	-	600	MSB-F	HHE-110	HM-10	SPARE
SP-204A1	2	PVC	-	-	-	600	HHE-110	HHE-111	HM-11	SPARE
SP-205A	2	PVC	-	-	-	600	MSB-F	HHE-1,109	HM-9	SPARE
SP-205A1	2	PVC	-	-	-	600	HHE-109	HHE-108	HM-8	SPARE
SP-206A	2	PVC	-	-	-	600	MSB-F	HHE-1,4,114	HM-14	SPARE
SP-206A1	2	PVC	-	-	-	600	HHE-114	HHE-115	HM-15	SPARE
SP-207A	2	PVC	-	-	-	600	MSB-F	HHE-1,4,113	HM-13	SPARE
SP-207A1	2	PVC	-	-	-	600	HHE-113	HHE-112	HM-12	SPARE
P-210	2	PVC	4	6 AWG	10 AWG	600	MSB-E	HHE-122,118,119	HM-19	
P-211A	2	PVC	4	4 AWG	10 AWG	600	MSB-E	HHE-122,118	HM-18	
P-211A1	2	PVC	4	4 AWG	10 AWG	600	HHE-118	HHE-117	HM-17	
P-211B	2	PVC	4	4 AWG	10 AWG	600	MSB-E	HHE-122,118,117,116	HM-16	
P-212A	2	PVC	4	6 AWG	10 AWG	600	MSB-E	HHE-122,123	HM-23	
P-213A	2	PVC	4	6 AWG	10 AWG	600	MSB-E	HHE-122	HM-22	
P-213A1	2	PVC	4	6 AWG	10 AWG	600	HHE-122	HHE-121	HM-21	
P-213B	2	PVC	4	6 AWG	10 AWG	600	MSB-E	HHE-122,121,120	HM-20	
P-214A	2	PVC	4	6 AWG	10 AWG	600	MSB-E	HHE-126	HM-26	
P-214A1	2	PVC	4	6 AWG	10 AWG	600	HHE-126	HHE-125	HM-25	
P-214B	2	PVC	4	6 AWG	10 AWG	600	MSB-E	HHE-126,125,124	HM-24	
P-215A	2	PVC	4	6 AWG	10 AWG	600	MSB-E	HHE-126, 127	HM-27	
SP-210	2	PVC	-	-	-	600	MSB-E	HHE-122,118,119	HM-19	SPARE
SP-211A	2	PVC	-	-	-	600	MSB-E	HHE-122,118	HM-18	SPARE
SP-211A1	2	PVC	-	-	-	600	HHE-118	HHE-117	HM-17	SPARE
SP-211B	2	PVC	-	-	-	600	MSB-E	HHE-122,118,117,116	HM-16	SPARE
SP-212A	2	PVC	-	-	-	600	MSB-E	HHE-122,123	HM-23	SPARE
SP-213A	2	PVC	-	-	-	600	MSB-E	HHE-122	HM-22	SPARE
SP-213A1	2	PVC	-	-	-	600	HHE-122	HHE-121	HM-21	SPARE
SP-213B	2	PVC	-	-	-	600	MSB-E	HHE-122,121,120	HM-20	SPARE
SP-214A	2	PVC	-	-	-	600	MSB-E	HHE-126	HM-26	SPARE
SP-214A1	2	PVC	-	-	-	600	HHE-126	HHE-125	HM-25	SPARE
SP-214B	2	PVC	-	-	-	600	MSB-E	HHE-126,125,124	HM-24	SPARE
SP-215A	2	PVC	-	-	-	600	MSB-E	HHE-126, 127	HM-27	SPARE

P-225A	3	PVC	-	-	-	600	MSB-B	HHE-23,8	FL-EV1	
P-225B	3	PVC	-	-	-	600	MSB-B	HHE-23,8	FL-EV2	
P-225C	3	PVC	-	-	-	600	MSB-B	HHE-23,8	FL-EV3	
P-225D	3	PVC	-	-	-	600	MSB-B	HHE-23,8	FL-EV4	
P-225E	3	PVC	-	-	-	600	MSB-B	HHE-23,8	FL-EV5	
P-225F	3	PVC	-	-	-	600	MSB-B	HHE-23,8	FL-EV6	
P-225G	3	PVC	-	-	-	600	MSB-B	HHE-23,8	FL-EV7	
P-225H	3	PVC	-	-	-	600	MSB-B	HHE-24,25,11,10,9	FL-EV8	
P-225I	3	PVC	-	-	-	600	MSB-B	HHE-24,25,11,10,9	FL-EV9	
P-225J	3	PVC	-	-	-	600	MSB-B	HHE-24,25,11,10,9	FL-EV10	
P-225K	3	PVC	-	-	-	600	MSB-B	HHE-24,25,11,10,9	FL-EV11	
P-225L	3	PVC	-	-	-	600	MSB-B	HHE-24,25,11,10,9	FL-EV12	
P-225M	3	PVC	-	-	-	600	MSB-B	HHE-24,25,11,10,9	FL-EV13	
P-225N	3	PVC	-	-	-	600	MSB-B	HHE-24,25,11,10,9	FL-EV14	
P-225O	3	PVC	-	-	-	600	MSB-B	HHE-24,25,11,10,9	FL-EV15	
SP-225A	3	PVC	-	-	-	600	MSB-B	HHE-23,8	SP-FL-EV	SPARE
SP-225B	3	PVC	-	-	-	600	MSB-B	HHE-23,8	SP-FL-EV	SPARE
SP-225H	3	PVC	-	-	-	600	MSB-B	HHE-24,25,11,10,9	SP-FL-EV	SPARE
SP-225I	3	PVC	-	-	-	600	MSB-B	HHE-24,25,11,10,9	SP-FL-EV	SPARE
P-226A	3	PVC	-	-	-	600	MSB-C	HHE-25,11,10	FL-EV16	
P-226B	3	PVC	-	-	-	600	MSB-C	HHE-25,11,10	FL-EV17	
P-226C	3	PVC	-	-	-	600	MSB-C	HHE-25,11,10	FL-EV18	
P-226D	3	PVC	-	-	-	600	MSB-C	HHE-25,11,10	FL-EV19	
P-226E	3	PVC	-	-	-	600	MSB-C	HHE-25,11,10	FL-EV20	
P-226F	3	PVC	-	-	-	600	MSB-C	HHE-25,11,10	FL-EV21	
P-226G	3	PVC	-	-	-	600	MSB-C	HHE-25,11,10	FL-EV22	
P-226H	3	PVC	-	-	-	600	MSB-C	HHE-25,11,10	FL-EV23	
P-226I	3	PVC	-	-	-	600	MSB-C	HHE-25,11	FL-EV24	
P-226J	3	PVC	-	-	-	600	MSB-C	HHE-25,11	FL-EV25	
P-226K	3	PVC	-	-	-	600	MSB-C	HHE-25,11	FL-EV26	
P-226L	3	PVC	-	-	-	600	MSB-C	HHE-25,11	FL-EV27	
P-226M	3	PVC	-	-	-	600	MSB-C	HHE-25,11	FL-EV28	
P-226N	3	PVC	-	-	-	600	MSB-C	HHE-25,11	FL-EV29	
P-226O	3	PVC	-	-	-	600	MSB-C	HHE-25,11	FL-EV30	
SP-226A	3	PVC	-	-	-	600	MSB-C	HHE-25,11,10	SP-FL-EV	SPARE
SP-226B	3	PVC	-	-	-	600	MSB-C	HHE-25,11,10	SP-FL-EV	SPARE
SP-226I	3	PVC	-	-	-	600	MSB-C	HHE-25,11	SP-FL-EV	SPARE
SP-226J	3	PVC	-	-	-	600	MSB-C	HHE-25,11	SP-FL-EV	SPARE

P-231A	2	PVC	4	4 AWG	10 AWG	600	MSB-A	HHE-27,128	HM-28	
P-231A1	2	PVC	4	4 AWG	10 AWG	600	HHE-26	HHE-128,129	HM-29	
P-231A2	2	PVC	4	4 AWG	10 AWG	600	HHE-129	HHE-131	HM-31	
P-232A	2	PVC	4	6 AWG	10 AWG	600	MSB-A	HHE-27,128,129,130	HM-30	
P-235A	2	PVC	4	3/0	6 AWG	600	MSB-A	HHE-27,128,129,130,21	GF-1	GATE FACILITY
P-235B	2	PVC	4	3/0	6 AWG	600	MSB-A	HHE-27,128,129	GF-2	GATE FACILITY
P-233A	3	PVC	4	350 kcmil	2 AWG	600	MSB-A	HHE-27,14	MC	MAINTENANCE CANOPY
P-233B	3	PVC	4	350 kcmil	2 AWG	600	MSB-A	HHE-27,14	MC	MAINTENANCE CANOPY
P-233C	3	PVC	4	350 kcmil	2 AWG	600	MSB-A	HHE-27,14	MC	MAINTENANCE CANOPY
P-233D	3	PVC	4	350 kcmil	2 AWG	600	MSB-A	HHE-27,14	MC	MAINTENANCE CANOPY
P-233E	3	PVC	4	350 kcmil	2 AWG	600	MSB-A	HHE-27,14	MC	MAINTENANCE CANOPY
P-233F	3	PVC	4	350 kcmil	2 AWG	600	MSB-A	HHE-27,14	MC	MAINTENANCE CANOPY
P-233G	3	PVC	4	350 kcmil	2 AWG	600	MSB-A	HHE-27,14	MC	MAINTENANCE CANOPY
P-234A	2	PVC	4	3/0	6 AWG	600	MSB-A	HHE-27,28,15	RC	RODABILITY CANOPY
SP-231A	2	PVC	-	-	-	600	MSB-A	HHE-27,128	HM-28	SPARE
SP-231A1	2	PVC	-	-	-	600	HHE-26	HHE-128,129	HM-29	SPARE
SP-231A2	2	PVC	-	-	-	600	HHE-129	HHE-131	HM-31	SPARE
SP-232A	2	PVC	-	-	-	600	MSB-A	HHE-27,128,129,130	HM-30	SPARE
SP-235A	2	PVC	-	-	-	600	MSB-A	HHE-27,128,129,130,21	GF-1	SPARE
SP-235B	2	PVC	-	-	-	600	MSB-A	HHE-27,128,129	GF-2	SPARE
SP-233A	2	PVC	-	-	-	600	MSB-A	HHE-27,14	MC	SPARE
SP-233B	2	PVC	-	-	-	600	MSB-A	HHE-27,14	MC	SPARE
SP-233C	2	PVC	-	-	-	600	MSB-A	HHE-27,14	MC	SPARE
SP-233D	2	PVC	-	-	-	600	MSB-A	HHE-27,14	MC	SPARE
SP-233E	2	PVC	-	-	-	600	MSB-A	HHE-27,14	MC	SPARE
SP-233F	2	PVC	-	-	-	600	MSB-A	HHE-27,14	MC	SPARE
SP-233G	2	PVC	-	-	-	600	MSB-A	HHE-27,14	MC	SPARE
SP-234A	2	PVC	-	-	-	600	MSB-A	HHE-27,28,15	RC	SPARE
P-240A	2	PVC	4	8 AWG	10 AWG	600	MSB-D	HHE-15,16,17	RB-1	RESTROOM
P-241A	2	PVC	4	8 AWG	10 AWG	600	MSB-D	HHE-15,18	RB-2	RESTROOM
P-242A	2	PVC	4	4 AWG	10 AWG	600	MSB-D	HHE-15,132	HM-32	
P-242A1	2	PVC	4	4 AWG	10 AWG	600	HHE-132	HHE-134	HM-34	
P-243A	2	PVC	4	4/0	2 AWG	600	MSB-D	HHE-15,20	TR-POV-EV	POV EV TRANSFORMER
P-244A	2	PVC	4	1/0	6 AWG	600	MSB-D	HHE-19	OMB	OFFICE BLDG
P-245A	2	PVC	4	4 AWG	8 AWG	600	MSB-D	HHE-15,16,133	HM-33	
P-246A	2	PVC	-	-	-	-	MSB-D	HHE-15,16	UTR-EV1	
P-246B	2	PVC	-	-	-	-	MSB-D	HHE-15,16	UTR-EV2	
P-246C	2	PVC	-	-	-	-	MSB-D	HHE-15,16	UTR-EV3	
P-246D	2	PVC	-	-	-	-	MSB-D	HHE-15,16	UTR-EV4	
P-246E	2	PVC	-	-	-	-	MSB-D	HHE-15,16	UTR-EV5	
P-246F	2	PVC	-	-	-	-	MSB-D	HHE-15,16	UTR-EV6	
P-246G	2	PVC	-	-	-	-	MSB-D	HHE-15,16	UTR-EV7	
P-246H	2	PVC	-	-	-	-	MSB-D	HHE-15,16	UTR-EV8	
P-246I	2	PVC	-	-	-	-	MSB-D	HHE-15,16	UTR-EV9	
P-246J	2	PVC	-	-	-	-	MSB-D	HHE-15,16	UTR-EV10	
P-246K	2	PVC	-	-	-	-	MSB-D	HHE-15,16	UTR-EV11	
P-246L	2	PVC	-	-	-	-	MSB-D	HHE-15,16	UTR-EV12	
P-246M	2	PVC	-	-	-	-	MSB-D	HHE-15,16	UTR-EV13	
P-246N	2	PVC	-	-	-	-	MSB-D	HHE-15,16	UTR-EV14	
P-246O	2	PVC	-	-	-	-	MSB-D	HHE-15,16	UTR-EV15	
P-246P	2	PVC	-	-	-	-	MSB-D	HHE-15,16	UTR-EV16	
SP-240A	2	PVC	-	-	-	-	MSB-D	HHE-15,16,17	RB-1	SPARE
SP-241A	2	PVC	-	-	-	-	MSB-D	HHE-15,18	RB-2	SPARE
SP-242A	2	PVC	-	-	-	-	MSB-D	HHE-15,132	HM-32	SPARE
SP-242A1	2	PVC	-	-	-	-	HHE-132	HHE-134	HM-34	SPARE
SP-243A	2	PVC	-	-	-	-	MSB-D	HHE-15,20	TR-POV-EV	SPARE
SP-244A	2	PVC	-	-	-	-	MSB-D	HHE-19	OMB	SPARE
SP-245A	2	PVC	-	-	-	-	MSB-D	HHE-15,16,133	HM-33	SPARE
SP-246A	2	PVC	-	-	-	-	MSB-D	HHE-15,16	SP-UTR-EV	SPARE
SP-246B	2	PVC	-	-	-	-	MSB-D	HHE-15,16	SP-UTR-EV	SPARE
SP-246C	2	PVC	-	-	-	-	MSB-D	HHE-15,16	SP-UTR-EV	SPARE
SP-246D	2	PVC	-	-	-	-	MSB-D	HHE-15,16	SP-UTR-EV	SPARE

NO.	DATE	DRAWN	REVISIONS -	CHK'D	APP'D
A	3/20/25	-	30% CONCEPTUAL DESIGN		
B	4/25/25	-	FINAL CONCEPTUAL DESIGN		
C	7/18/25	-	40% DESIGN		
D	9/19/25	-	80% DESIGN		

NOT FOR CONSTRUCTION

NO.	DATE	DRAWN	REVISIONS -	CHK'D	APP'D

80% DESIGN REVIEW SEP 19 , 2025

Jacobs
2600 MICHELSON DRIVE, SUITE 500
IRVINE, CA 92612
T: (949) 224-7500
F: (949) 224-7501

REGISTERED PROFESSIONAL ENGINEER — RAVI MATHEWS — E 18650 EXP. 12/31/2026 — ELECTRICAL — STATE OF CALIFORNIA

SCALE: AS SHOWN
DRAWN: R. SHARMA
CHECKED: D. WAGNER
DESIGNED: A. MATHEWS
ENGINEER / ARCHITECT

TERMINAL ISLAND MARITIME SUPPORT FACILITY

CONDUIT SCHEDULE

THE PORT OF LOS ANGELES
ENGINEERING DIVISION
425 S. PALOS VERDES STREET SAN PEDRO CA 90731-3309

DRAWING NUMBER 1-3513
SHEET NUMBER E-27

POLAPROT_043023_BWD

NEW DUCTBANKS

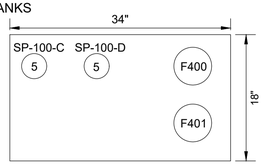

A SECTION NTS

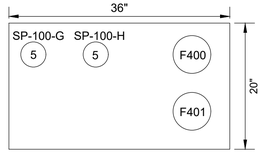

B SECTION NTS

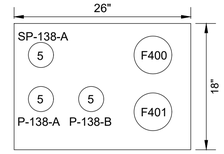

C SECTION NTS

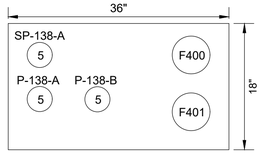

D SECTION NTS

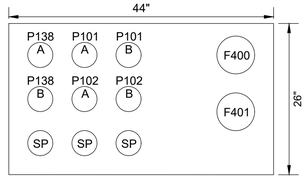

E SECTION NTS

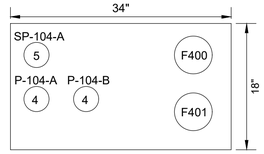

H SECTION NTS

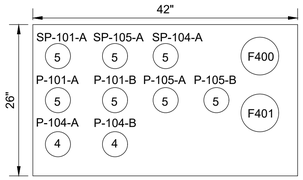

I SECTION NTS

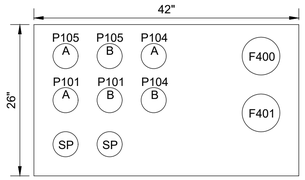

J SECTION NTS

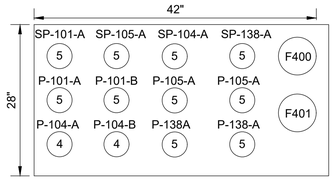

K SECTION NTS

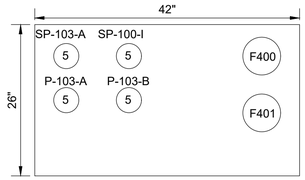

L SECTION NTS

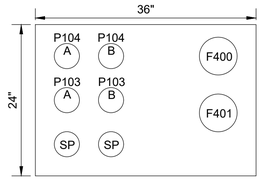

N SECTION NTS

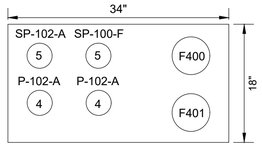

F SECTION NTS

EXISTING DUCTBANKS

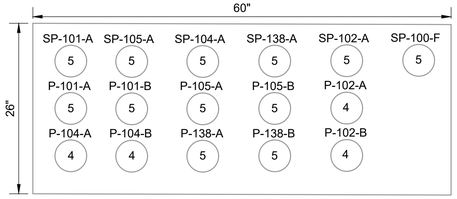

AA SECTION NTS

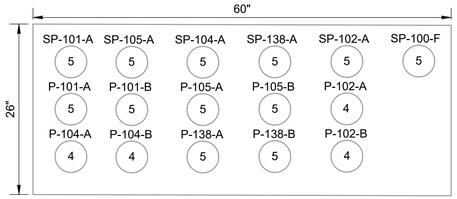

AB SECTION NTS

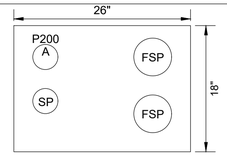

a SECTION NTS

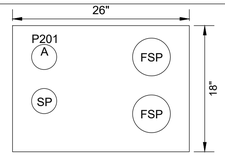

c SECTION NTS

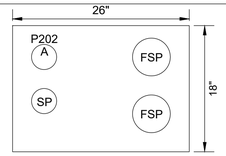

d SECTION NTS

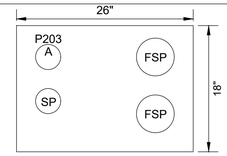

e SECTION NTS

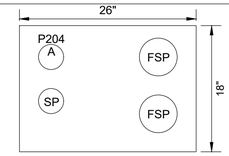

f SECTION NTS

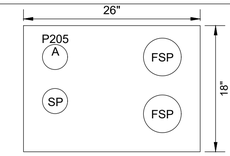

g SECTION NTS

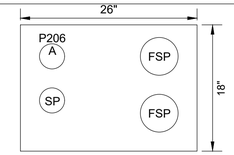

h SECTION NTS

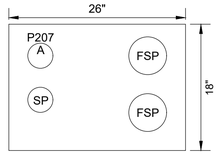

i SECTION NTS

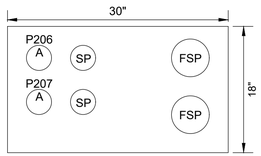

k SECTION NTS

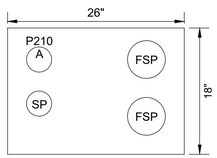

n SECTION NTS

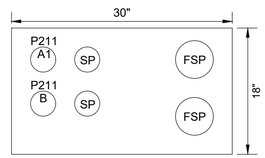

o SECTION NTS

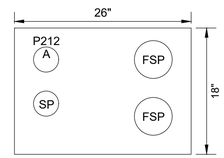

p SECTION NTS

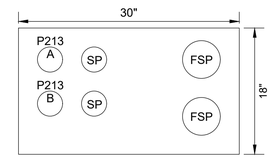

q SECTION NTS

NO.	DATE	DRAWN	REVISIONS -	CHK'D	APP'D
A	3/20/25	-	30% CONCEPTUAL DESIGN		
B	4/25/25	-	FINAL CONCEPTUAL DESIGN		
C	7/18/25	-	40% DESIGN		
D	9/19/25	-	80% DESIGN		

NOT FOR CONSTRUCTION

NO.	DATE	DRAWN	REVISIONS -	CHK'D	APP'D
			80% DESIGN REVIEW SEP 19 , 2025		

Jacobs
2600 MICHELSON DRIVE, SUITE 500
IRVINE, CA 92612
T: (949) 224-7500
F: (949) 224-7501

REGISTERED PROFESSIONAL ENGINEER — ABET MATHEWS — E 18650 EXP. 12/31/2026 — ELECTRICAL — STATE OF CALIFORNIA

SCALE:	AS SHOWN
DRAWN:	R. SHARMA
CHECKED:	D. WAGNER
DESIGNED:	A. MATHEWS
	ENGINEER / ARCHITECT

TERMINAL ISLAND MARITIME SUPPORT FACILITY

DUCTBANK SECTION

THE PORT OF LOS ANGELES
ENGINEERING DIVISION
425 S. PALOS VERDES STREET SAN PEDRO CA 90731-3309

DRAWING NUMBER 1-3513

SHEET NUMBER E-28

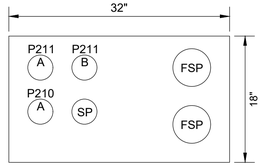

r SECTION NTS

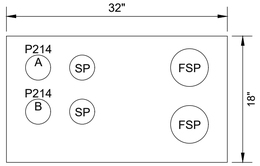

s SECTION NTS

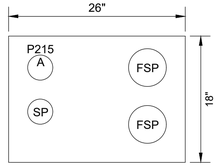

t SECTION NTS

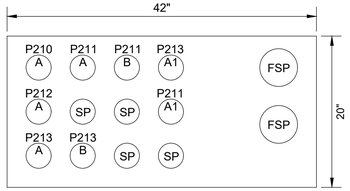

u SECTION NTS

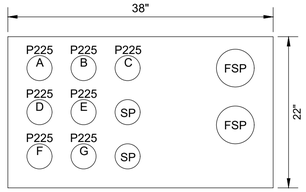

x SECTION NTS

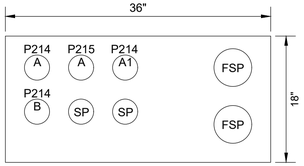

z SECTION NTS

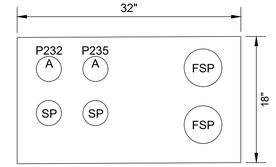

aa SECTION NTS

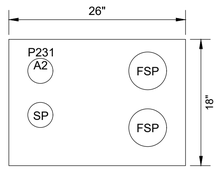

ab SECTION NTS

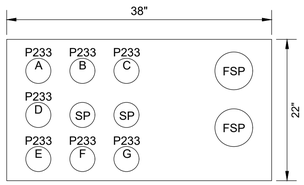

ac SECTION NTS

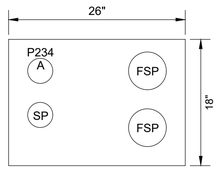

ad SECTION NTS

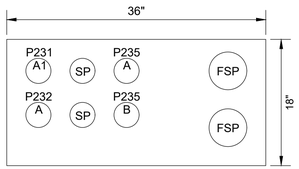

ae SECTION NTS

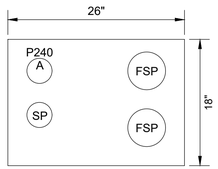

af SECTION NTS

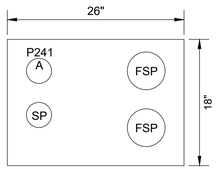

ag SECTION NTS

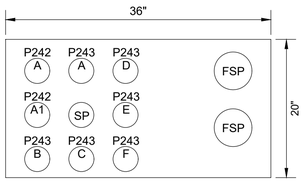

ah SECTION NTS

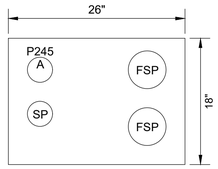

ak SECTION NTS

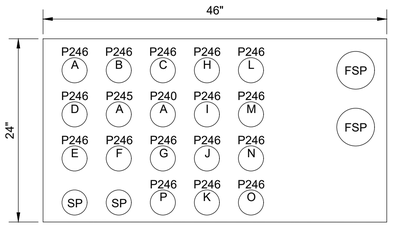

al SECTION NTS

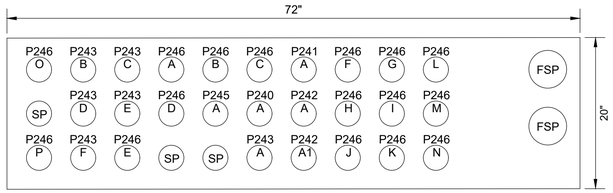

am SECTION NTS

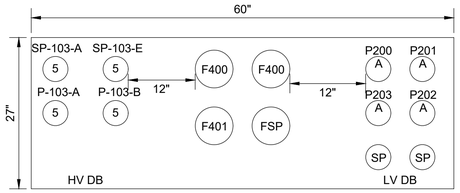

z1 SECTION NTS

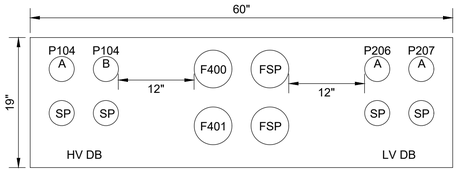

z2 SECTION NTS

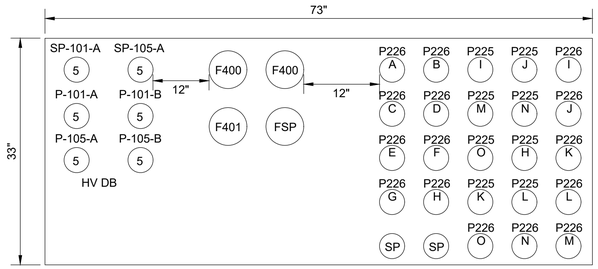

z3 SECTION NTS

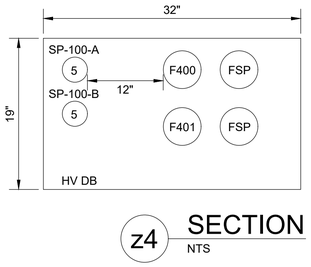

z4 SECTION NTS

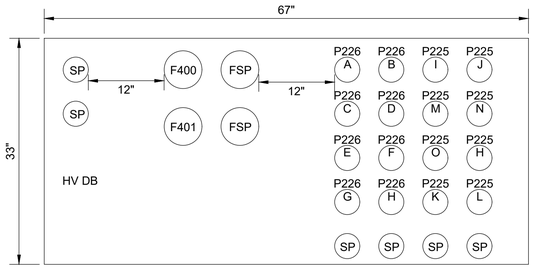

z5 SECTION NTS

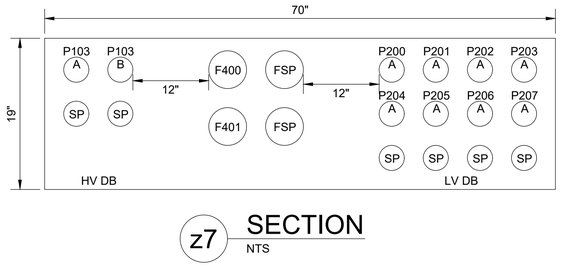

z7 SECTION NTS

NO.	DATE	DRAWN	REVISIONS -	CHK'D	APP'D
A	3/20/25	-	30% CONCEPTUAL DESIGN		
B	4/25/25	-	FINAL CONCEPTUAL DESIGN		
C	7/18/25	-	40% DESIGN		
D	9/19/25	-	80% DESIGN		

NOT FOR CONSTRUCTION

NO.	DATE	DRAWN	REVISIONS -	CHK'D	APP'D

80% DESIGN REVIEW SEP 19 , 2025

Jacobs
3600 MICHELSON DRIVE, SUITE 600
IRVINE, CA 92612
T: (949) 224-7500
F: (949) 224-7501

REGISTERED PROFESSIONAL ENGINEER — AMIT MATHEWS — E 18650 EXP. 12/31/2026 — ELECTRICAL — STATE OF CALIFORNIA

SCALE:	AS SHOWN
DRAWN:	R. SHARMA
CHECKED:	D. WAGNER
DESIGNED:	A. MATHEWS
	ENGINEER / ARCHITECT

TERMINAL ISLAND MARITIME SUPPORT FACILITY

DUCTBANK SECTION

THE PORT OF LOS ANGELES
ENGINEERING DIVISION
425 S. PALOS VERDES STREET SAN PEDRO CA 90731-3309

DRAWING NUMBER 1-3513

SHEET NUMBER E-29

POLAPRDT_042023_BWD

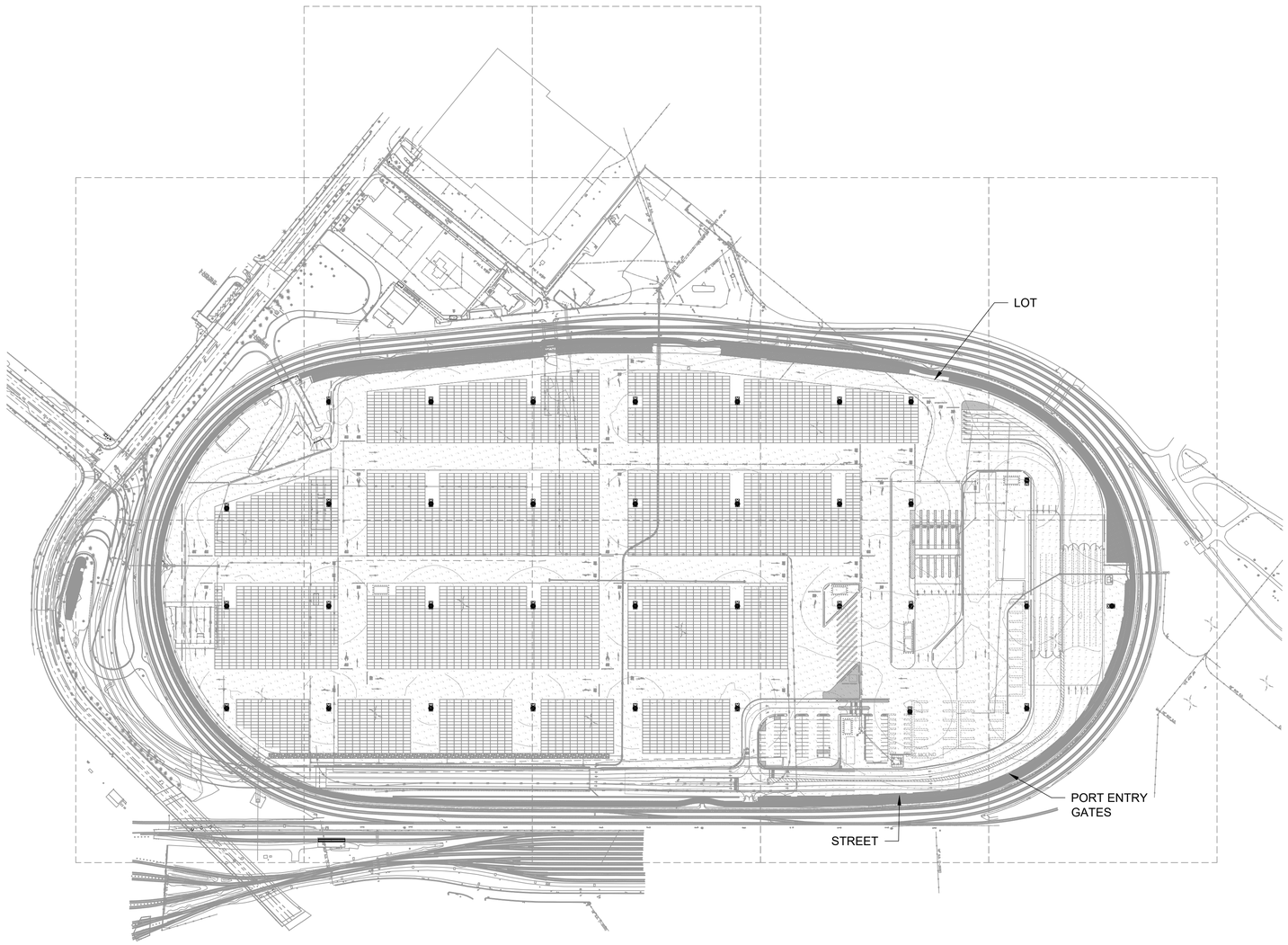

E-30 / E-30 PLAN
SCALE: 1" = 200'

N

Luminaire Schedule

Symbol	Qty	Label	Arrangement	Total Lamp Lumens	LLF	Description
●	34	HMLED4 P3 40K XXXXX AW	12 @ 30 Degrees	N.A.	0.950	HMLED4 P3 50K XXXXX AW

Calculation Summary

Label	CalcType	Units	Avg	Max	Min	Avg/Min	Max/Min
Lot	Illuminance	Fc	6.51	11.7	1.5	4.34	7.80
Port entry gates	Illuminance	Fc	5.28	9.0	1.6	3.30	5.63
Street	Illuminance	Fc	2.56	7.7	1.1	2.33	7.00

GENERAL LIGHTING NOTES

1. WORK SHALL COMPLY WITH THE LATEST EDITION OF LOS ANGELES ELECTRICAL CODE (LAEC) AND OTHER APPLICABLE FEDERAL STATE AND LOCAL CODES. WHERE DRAWINGS SHOW MORE RESTRICTIVE REQUIREMENTS, DRAWINGS SHALL GOVERN. NOTHING ON THESE DRAWINGS SHALL BE INTERPRETED AS AUTHORITY TO VIOLATE ANY CODE OR REGULATION.
2. CIRCUIT BREAKERS, FUSES AND ELECTRICAL EQUIPMENT SHALL HAVE AN INTERRUPTING RATING NOT LESS THAN THE MAXIMUM SHORT CIRCUIT CURRENT TO WHICH THEY MAY BE SUBJECTED.
3. MATERIALS AND EQUIPMENT SHALL BE NEW AND SHALL BEAR THE UNDERWRITERS' LABORATORIES INC (UL) LABEL AND SHALL BE INSTALLED IN THE MANNER FOR WHICH IT IS DESIGNED AND APPROVED. ELECTRICAL EQUIPMENT SHALL BE LISTED BY A CITY OF LOS ANGELES RECOGNIZED ELECTRICAL TESTING LABORATORY OR APPROVED BY DEPARTMENT.
4. DEVICES INSTALLED OUTSIDE OR IN DAMP LOCATIONS SHALL BE APPROVED WEATHERPROOF.
5. FEEDER CONDUCTORS AND BRANCH CIRCUIT WIRING SHALL BE TYPE THHN/THWN COPPER. WIRE SHALL BE UL LISTED, RATED FOR 600 VOLTS, NO. 10 AWG MINIMUM SIZE UNLESS NOTED OTHERWISE.
6. INSTALL CONDUITS AND WIRES WITH A MINIMUM NUMBER OF BENDS AND IN SUCH A MANNER AS TO CONFORM TO THE STRUCTURE. AVOID OBSTRUCTIONS, PRESERVE HEAD ROOM KEEP OPENINGS, AND PASSAGEWAYS CLEAR AND MEET STRUCTURAL CODE REQUIREMENTS.
7. DO NOT BORE, NOTCH OR IN ANY WAY CUT INTO ANY STRUCTURAL MEMBER.
8. PROVIDE SUPPORT FOR FIXTURES AND ELECTRICAL EQUIPMENT TO COMPLY WITH THE SEISMIC REQUIREMENTS OF THE UNIFORM BUILDING CODE AND LOCAL ORDINANCES.
9. MAKE POWER CONNECTIONS TO EQUIPMENT, THAT REQUIRE POWER CONNECTIONS.
10. SEAL ELECTRICAL CONDUIT ENTERING AREAS OF TEMPERATURE CHANGE BY TYPE FITTINGS TO PREVENT AIR MIGRATION AND CONDENSATION.
11. THE ENTIRE ELECTRICAL INSTALLATION SHALL BE GROUNDED AS REQUIRED BY CODES AND THE SERVING UTILITY.
12. THE ENTIRE WIRING SYSTEM SHALL BE TESTED FOR SHORT CIRCUITS, GROUNDS AND INSULATION RESISTANCE BETWEEN CONDUCTORS AND TO GROUND.
13. FURNISH AND INSTALL CONDUITS, WIRES, BOXES, SWITCHES, LIGHT FIXTURES (WITH LAMPS), RECEPTACLES, SERVICE DEVICES, AND PANEL BOARDS REQUIRED FOR A COMPLETE AND OPERATIONAL ELECTRICAL SYSTEM. STARTERS, FUSED DISCONNECTS, BREAKERS, FUSES, CONTACTORS, SWITCHES, J-BOXES, CONDUITS, CONDULETS AND WIRES THAT ARE NOT SUPPLIED BY THE EQUIPMENT MANUFACTURER IN A PREWIRED PANEL ARE BY CONTRACTOR UNLESS OTHERWISE NOTED.
14. SWITCHES AND CIRCUIT BREAKERS, DISCONNECTING MOTORS OR CONTROLLING ELECTRICAL DISCHARGE LIGHTING SHALL BE WITHIN SIGHT OF MOTORS OR FIXTURES (NOT OVER 50 FEET) OR BE CAPABLE OF BEING LOCKED IN THE OPEN POSITION.
15. VERIFY EXISTING SITE CONDITIONS AND VERIFY SERVICE EQUIPMENT REQUIREMENTS WITH LOS ANGELES DEPARTMENT OF WATER AND POWER AND AT&T TELEPHONE COMPANY FOR EXACT LOCATIONS OF SERVICE FACILITIES BEFORE SUBMITTING BID.
16. RECEIVE, STORE AND INSTALL ELECTRICAL ITEMS FURNISHED BY DEPARTMENT.
17. LOADS SERVED BY CIRCUIT BREAKERS IN THE MAIN SWITCHBOARD SHALL BE IDENTIFIED WITH ENGRAVED BAKELITE NAMEPLATES ATTACHED WITH SCREWS.
18. ELECTRICAL DRAWINGS ARE DIAGRAMMATIC AND DO NOT SHOW OFFSETS, BENDS, FITTINGS, JUNCTION BOXES, PULL BOXES AND EXPANSION FITTINGS REQUIRED TO MEET FIELD CONDITIONS. DETERMINE ACTUAL MATERIAL AND HARDWARE REQUIREMENTS AND VERIFY DIMENSIONS BY FIELD INSPECTION.
19. WORK AND MATERIALS SHALL COMPLY TO CITY OF LOS ANGELES DEPARTMENT OF BUILDING & SAFETY REQUIREMENTS. ELECTRICAL EQUIPMENT SHALL BE LISTED BY A CITY OF LOS ANGELES RECOGNIZED ELECTRICAL TESTING LABORATORY OR APPROVED BY DEPARTMENT.
20. MINIMUM DEPTH OF DIRECT BURIAL AND CONCRETE ENCASED CONDUIT SHALL BE 3'-6" FROM FINISHED SURFACE UNLESS OTHERWISE NOTED.
21. MARINA POWER PEDESTAL SHALL BE AS SPECIFIED IN THE SYMBOL LIST, RECEPTACLES SHALL BE PROTECTED BY INDIVIDUAL 30 mA GROUND FAULT PROTECTION CIRCUIT BREAKERS LOCATED INTEGRAL WITH THE PEDESTALS.
22. COORDINATE FINAL LOCATION OF ELECTRICAL CONDUITS AND OTHER UTILITIES.
23. LIGHT FIXTURES MANUFACTURER CATALOG INFORMATION AND REQUIREMENTS, SEE LANDSCAPE LIGHTING DRAWINGS.
24. ELECTRICAL EQUIPMENT AND DEVICES INSTALLED OUTDOORS SHALL BE ENCLOSED IN WEATHERPROOF, CORROSION RESISTANT, HOT DIPPED GALVANIZED NEMA 3R ENCLOSURES. HARDWARE SHALL BE HOT DIP GALVANIZED OR STAINLESS STEEL.
25. UNDERGROUND CONDUIT SHALL BE NON-METALLIC SCHEDULE 40 PVC. UNDERGROUND CONDUIT BENDS AND PVC CONDUIT JOINTS SHALL BE NON-METALLIC SCHEDULE 80 PVC. THE TERMINATING 10'-0" OF UNDERGROUND CONDUIT, EXCEPT FOR PRE-CAST PULLBOX SHALL BE RIGID GALVANIZED STEEL WITH 40 MIL BONDED PVC COATING. ALL EXPOSED CONDUIT SHALL BE RIGID GALVANIZED STEEL, UNLESS OTHERWISE NOTED.
26. NO PIPING, DUCTS OR EQUIPMENT FOREIGN TO ELECTRICAL EQUIPMENT SHALL BE PERMITTED TO BE LOCATED WITHIN THE DEDICATED SPACE ABOVE THE ELECTRICAL EQUIPMENT.
27. PANEL BOARDS SHALL BE POWER LINK.
28. TRANSFORMERS SHALL BE DRY-TYPE EXCEPT LADWP (UTILITY) INSTALLED TRANSFORMER.

200' 0' 200' 400'
SCALE: 1" = 200'

NO.	DATE	DRAWN	REVISIONS -	CHK'D	APP'D
A	3/20/25	-	30% CONCEPTUAL DESIGN		
B	4/25/25	-	FINAL CONCEPTUAL DESIGN		
C	7/18/25	-	40% DESIGN		
D	9/19/25	-	80% DESIGN		

NOT FOR CONSTRUCTION

NO.	DATE	DRAWN	REVISIONS -	CHK'D	APP'D

80% DESIGN REVIEW
SEP 19 , 2025

Jacobs
2600 MICHELSON DRIVE, SUITE 500
IRVINE, CA 92612
T: (949) 224-7500
F: (949) 224-7501

REGISTERED PROFESSIONAL ENGINEER ABEY MATHEWS E 18650 EXP.12/31/2026 ELECTRICAL STATE OF CALIFORNIA

SCALE: AS SHOWN
DRAWN: R. SHARMA
CHECKED: D. WAGNER
DESIGNED: A. MATHEWS
ENGINEER / ARCHITECT

TERMINAL ISLAND MARITIME SUPPORT FACILITY

ELECTRICAL LIGHTING PHOTOMETRY PLAN

THE PORT OF LOS ANGELES
ENGINEERING DIVISION
425 S. PALOS VERDES STREET SAN PEDRO CA 90731-3309

DRAWING NUMBER 1-3513
SHEET NUMBER E-30

POLAPRO1_042023_BWD

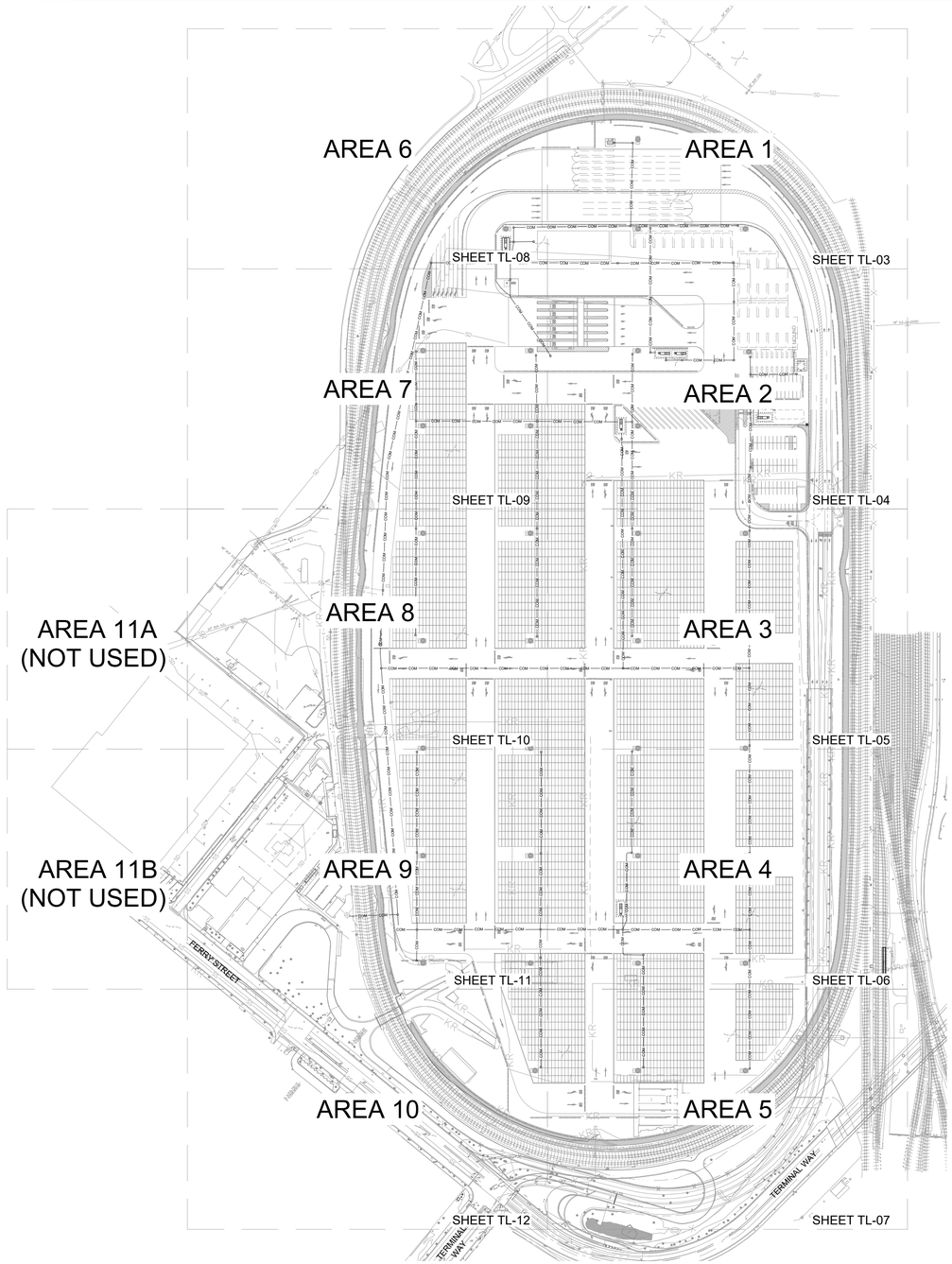

TL-02 / TL-02 PLAN
SCALE: 1" = 200'

GENERAL NOTES:

1. NOTES BELOW ARE NOT INTENDED TO REPLACE SPECIFICATIONS. SEE SPECIFICATIONS FOR REQUIREMENTS IN ADDITION TO GENERAL NOTES.
2. ALL WORK SHALL COMPLY WITH THE LATEST CODES AND STANDARDS LISTED IN BASIS OF DESIGN. CODES SHALL BE THE LATEST ISSUE, INCLUDING SUPPLEMENTS, UNLESS OTHERWISE NOTED.
3. ALL WORK SHALL CONFORM TO THE REQUIREMENTS OF THE CONTRACT DRAWINGS AND OF THE SPECIFICATIONS. SHOULD THERE BE A DISCREPANCY BETWEEN WHAT IS SHOWN ON SPECIFICATIONS AND WHAT IS SHOWN IN CONTRACT DRAWINGS, THE CONTRACTOR SHALL BRING THIS TO THE ATTENTION OF THE OWNER AND ENGINEER. THE OWNER AND ENGINEER SHALL DIRECT THE CONTRACTOR ON HOW TO PROCEED.
4. ALL SAFETY REGULATIONS ARE TO BE STRICTLY FOLLOWED. METHODS OF DEMOLITION AND CONSTRUCTION ARE THE CONTRACTOR'S RESPONSIBILITY.
5. THE CONTRACTOR SHALL VERIFY ALL INDICATED CONDITIONS AND DIMENSIONS IN THE FIELD BEFORE COMMENCING ANY FABRICATION, ORDERING OF MATERIAL, OR PERFORMING ANY WORK. NOTIFY THE OWNER'S REPRESENTATIVE OF ANY CONDITIONS OR DIMENSIONS THAT WOULD PREVENT OR HAMPER THE PERFORMANCE OF THE WORK IN ACCORDANCE WITH THE CONTRACT DRAWINGS AND SPECIFICATIONS.
6. THE CONTRACTOR SHALL REMOVE FROM THE SITE ANY DEBRIS THAT MAY BE GENERATED THROUGH THE PERFORMANCE OF THE WORK ON REGULAR BASIS. PROPER DISPOSAL OF ALL MATERIALS IS THE CONTRACTOR'S RESPONSIBILITY. THE CONTRACTOR SHALL TAKE ALL PRECAUTIONS NECESSARY TO PREVENT CONCRETE DEBRIS AND SOIL FROM ENTERING THE WATER OR STORM DRAINAGE SYSTEMS OR PUBLIC RIGHTS OF WAY.
7. CONTRACTOR SHALL TAKE ALL PRECAUTIONS NECESSARY TO PREVENT CONTAMINATED WATER, EQUIPMENT FLUIDS, CONSTRUCTION DEBRIS, AND OTHER CONTAMINANTS FROM ENTERING THE WATERWAY.
8. THE CONTRACTOR SHALL ABIDE BY ALL APPLICABLE FEDERAL. STATE. AND LOCAL ENVIRONMENT
9. CONDUIT RUNS ARE SHOWN "DIAGRAMMATICALLY", DETERMINE ACTUAL LOCATIONS AND ROUTING IN THE FIELD TO SUIT CONDITIONS.
10. AT THE COMPLETION OF WORK, SUBMIT AN "AS BUILT" DRAWINGS SHOWING THE CHANGES IN WORK OCCURRING DURING THE COURSE OF CONSTRUCTION, AND ACTUAL LOCATIONS OF CONDUIT RUNS.
11. RE-ESTABLISH PAVEMENT MARKINGS AND REPAIR ANY EQUIPMENT AND STRUCTURES DAMAGED BY ANY IMPROVEMENTS FROM THIS PROJECT.
12. TRENCH EXCAVATION SHALL BE COORDINATED WITH THE TENANT 48 HOURS IN ADVANCE. PROTECT EXCAVATIONS AND TRENCHING AGAINST CAVING IN ORDERS, CONFORMANCE WITH "CONSTRUCTION SAFETY DIVISION OF INDUSTRIAL SAFETY, STATE OF CALIFORNIA TITLE 8." PLACE BARRICADES AND INSTALL ADEQUATE WARNING LIGHTS TO PROTECT OPEN EXCAVATION. INSTALL AND MAINTAIN TEMPORARY BRIDGES TO PROVIDE ACCESS TO THE FACILIT

LEGEND OF CONSTRUCTION NOTES

COORDINATE	
CONSTRUCT	REMODEL EXISTING
EXISTING	REMOVE AND CONSTRUCT
REMOVE	RELOCATE
NOT IN CONTRACT	ABANDON

200' 0' 200' 400'
SCALE: 1" = 200'

NO.	DATE	DRAWN	REVISIONS -	CHK'D	APP'D
A	3/20/25	-	30% CONCEPTUAL DESIGN		
B	4/25/25	-	FINAL CONCEPTUAL DESIGN		
C	7/18/25	-	40% DESIGN		
D	9/19/25	-	80% DESIGN		

NOT FOR CONSTRUCTION

NO.	DATE	DRAWN	REVISIONS -	CHK'D	APP'D

80% DESIGN REVIEW
SEP 19 , 2025

Jacobs
2600 MICHELSON DRIVE, SUITE 500
IRVINE, CA 92612
T: (949) 224-7500
F: (949) 224-7501

REGISTERED PROFESSIONAL ENGINEER — BRET MATHEWS — E 18650 EXP.12/31/2026 — ELECTRICAL — STATE OF CALIFORNIA

SCALE: AS SHOWN
DRAWN: R. SHARMA
CHECKED: D. WAGNER
DESIGNED: A. MATHEWS
ENGINEER / ARCHITECT

TERMINAL ISLAND MARITIME SUPPORT FACILITY

TELECOM KEY PLAN AND NOTES

THE PORT OF LOS ANGELES
ENGINEERING DIVISION
425 S. PALOS VERDES STREET SAN PEDRO CA 90731-3309

DRAWING NUMBER: 1-3513
SHEET NUMBER: TL-02

POLAPRO1_040223_BWD

No.	CONSTRUCTION ITEM	REFERENCE DWG
353	TELECOM DUCTBANK	
354	TELECOM HANDHOLE	

GENERAL NOTES:

1. CONTRACTOR SHALL CORDINATE DEPTH OF DUCTBANKS WITH OTHER SURROUNDING UTILITIES.
2. SEE DRAWINGS E-28 AND E-29 FOR TYPICAL DUCTBANK SECTION.

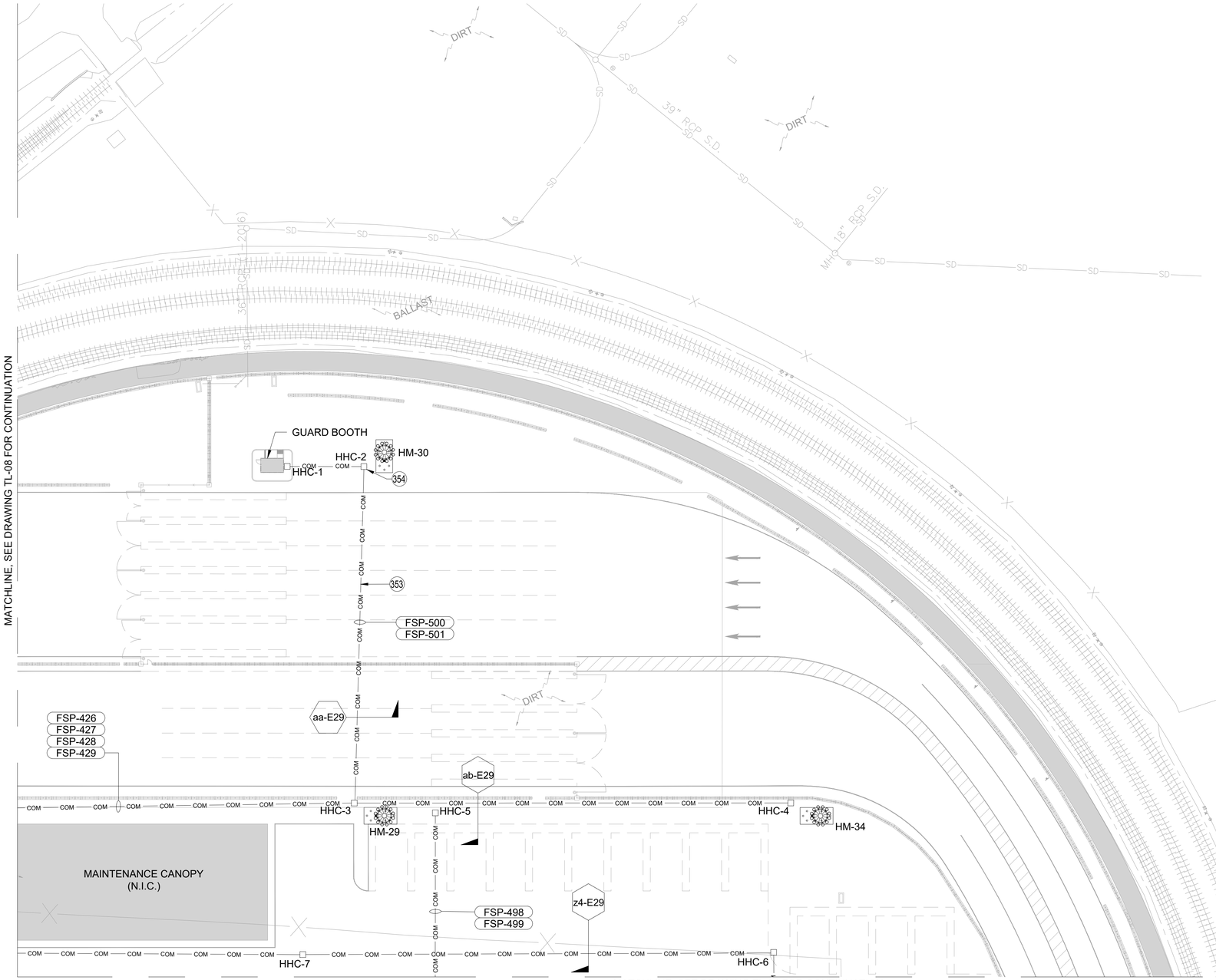

1TL-02 / TL-03 PLAN
SCALE: 1" = 40'

N

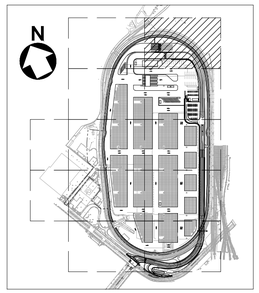

KEY MAP

40' 0' 40' 80'

SCALE: 1" = 40'

NO.	DATE	DRAWN	REVISIONS -	CHK'D	APP'D
A	3/20/25	-	30% CONCEPTUAL DESIGN		
B	4/25/25	-	FINAL CONCEPTUAL DESIGN		
C	7/18/25	-	40% DESIGN		
D	9/19/25	-	80% DESIGN		

NOT FOR CONSTRUCTION

NO.	DATE	DRAWN	REVISIONS -	CHK'D	APP'D
			80% DESIGN REVIEW SEP 19 , 2025		

Jacobs
2600 MICHELSON DRIVE, SUITE 500
IRVINE, CA 92612
T (949) 224-7500
F (949) 224-7501

REGISTERED PROFESSIONAL ENGINEER
BET MATHEWS
E 18650
EXP. 12/31/2026
ELECTRICAL
STATE OF CALIFORNIA

SCALE: AS SHOWN
DRAWN: R. SHARMA
CHECKED: D. WAGNER
DESIGNED: A. MATHEWS
ENGINEER / ARCHITECT

TERMINAL ISLAND MARITIME SUPPORT FACILITY

TELECOM PLAN - AREA 1

THE PORT OF LOS ANGELES
ENGINEERING DIVISION
425 S. PALOS VERDES STREET SAN PEDRO CA 90731-3309

DRAWING NUMBER: 1-3513
SHEET NUMBER: TL-03

POLAPRO1_042023_BWD

MATCHLINE, SEE DRAWING TL-03 FOR CONTINUATION

MATCHLINE, SEE DRAWING TL-09 FOR CONTINUATION

MATCHLINE, SEE DRAWING TL-05 FOR CONTINUATION

ROADABILITY CANOPY

HHC-23 HHC-20 HHC-12 HHC-11 HHC-10 HHC-8 HHC-9 HHC-13 HHC-14 HHC-15 HHC-16 HHC-17 HHC-18 HHC-19 HHC-21 HHC-22

HM-27 HM-33 HM-26

FSP-462 FSP-463 FSP-464 FSP-465

FSP-496 FSP-497

FSP-492 FSP-493

x-E28 z5-E29 z3-E29 ak-E29 af-E29 al-E29 am-E29 ag-E29 ah-E29 t-E29 z-E29 u-E29 s-E29 d-E28

353 354

MSB-B MSB-C MSB-D MSB-E

FRONT

RESTROOM

RESTROOM (N.I.C.)

OFFICE (N.I.C.)

SUMP PUMP CONTROL PANEL

DIRT MOUND

18" S.D.

No.	CONSTRUCTION ITEM	REFERENCE DWG
353	TELECOM DUCTBANK	
354	TELECOM HANDHOLE	

GENERAL NOTES:

1. CONTRACTOR SHALL CORDINATE DEPTH OF DUCTBANKS WITH OTHER SURROUNDING UTILITIES.
2. SEE DRAWINGS E-28 AND E-29 FOR TYPICAL DUCTBANK SECTION.

2TL-02 / TL-04 PLAN
SCALE: 1" = 40'

KEY MAP

40' 0' 40' 80'
SCALE: 1" = 40'

NO.	DATE	DRAWN	REVISIONS -	CHK'D	APP'D
A	3/20/25	-	30% CONCEPTUAL DESIGN		
B	4/25/25	-	FINAL CONCEPTUAL DESIGN		
C	7/18/25	-	40% DESIGN		
D	9/19/25	-	80% DESIGN		

NOT FOR CONSTRUCTION

80% DESIGN REVIEW
SEP 19 , 2025

Jacobs
2600 MICHELSON DRIVE, SUITE 500
IRVINE, CA 92612
T: (949) 224-7500
F: (949) 224-7501

REGISTERED PROFESSIONAL ENGINEER
MATT MATHEWS
E 18650
EXP. 12/31/2026
ELECTRICAL
STATE OF CALIFORNIA

SCALE: AS SHOWN
DRAWN: R. SHARMA
CHECKED: D. WAGNER
DESIGNED: A. MATHEWS
ENGINEER / ARCHITECT

TERMINAL ISLAND MARITIME SUPPORT FACILITY

TELECOM PLAN - AREA 2

THE PORT OF LOS ANGELES
ENGINEERING DIVISION
425 S. PALOS VERDES STREET SAN PEDRO CA 90731-3309

DRAWING NUMBER: 1-3513
SHEET NUMBER: TL-04

POLAPRO1_040223_BWD

MATCHLINE, SEE DRAWING TL-04 FOR CONTINUATION

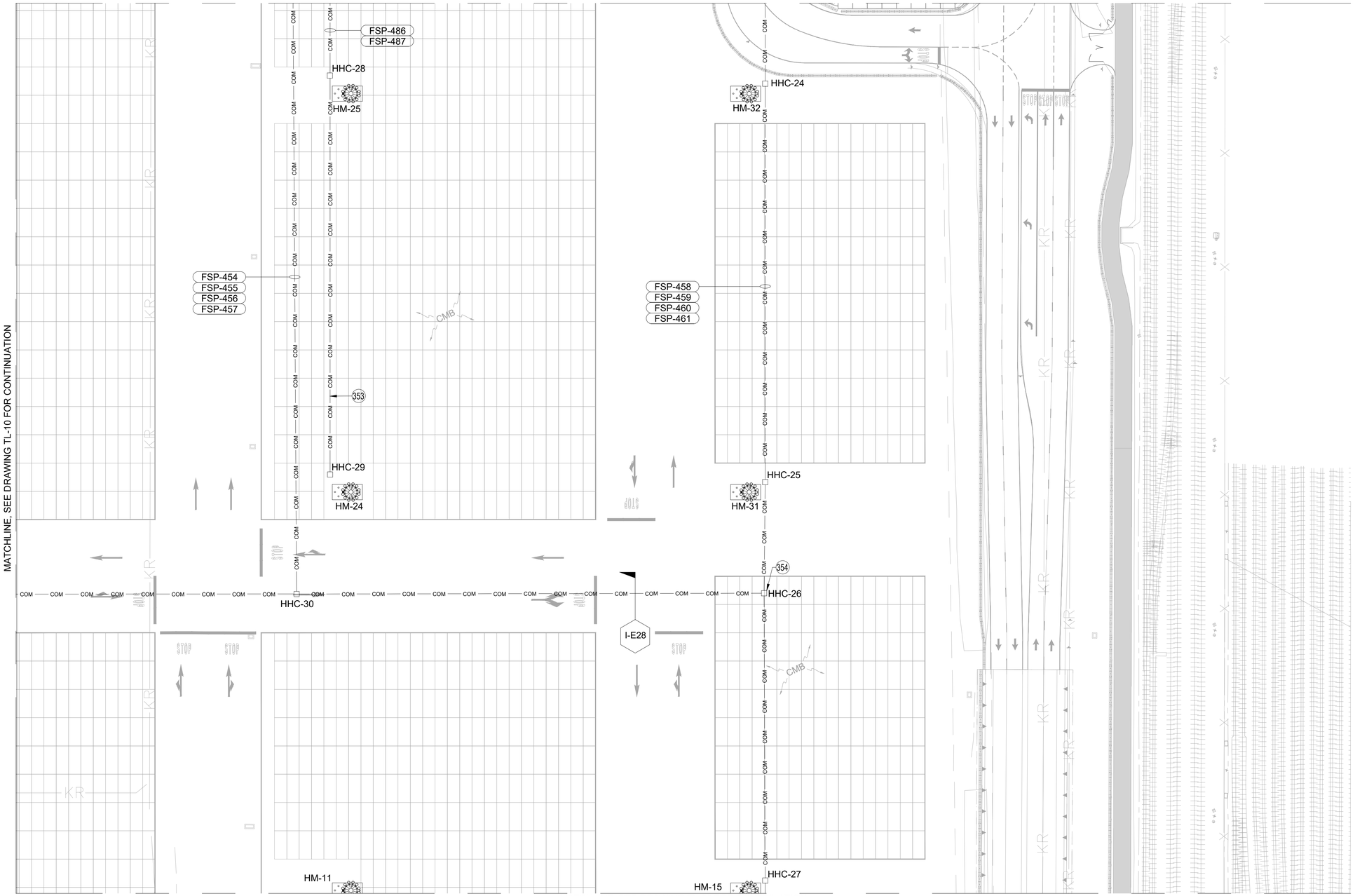

MATCHLINE, SEE DRAWING TL-10 FOR CONTINUATION

MATCHLINE, SEE DRAWING TL-06 FOR CONTINUATION

No.	CONSTRUCTION ITEM	REFERENCE DWG
353	TELECOM DUCTBANK	
354	TELECOM HANDHOLE	

GENERAL NOTES:

1. CONTRACTOR SHALL CORDINATE DEPTH OF DUCTBANKS WITH OTHER SURROUNDING UTILITIES.
2. SEE DRAWINGS E-28 AND E-29 FOR TYPICAL DUCTBANK SECTION.

3TL-02 / TL-05 PLAN

SCALE: 1" = 40'

N

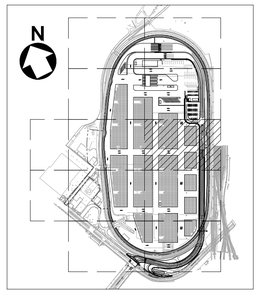

KEY MAP

40' 0' 40' 80'

SCALE: 1" = 40'

NO.	DATE	DRAWN	REVISIONS -	CHK'D	APP'D
A	3/20/25	-	30% CONCEPTUAL DESIGN		
B	4/25/25	-	FINAL CONCEPTUAL DESIGN		
C	7/18/25	-	40% DESIGN		
D	9/19/25	-	80% DESIGN		

NOT FOR CONSTRUCTION

NO.	DATE	DRAWN	REVISIONS -	CHK'D	APP'D

80% DESIGN REVIEW SEP 19 , 2025

Jacobs
2600 MICHELSON DRIVE, SUITE 500
IRVINE, CA 92612
T: (949) 224-7500
F: (949) 224-7501

REGISTERED PROFESSIONAL ENGINEER ABEY MATHEWS E 18650 EXP. 12/31/2026 ELECTRICAL STATE OF CALIFORNIA

SCALE: AS SHOWN
DRAWN: R. SHARMA
CHECKED: D. WAGNER
DESIGNED: A. MATHEWS
ENGINEER / ARCHITECT

TERMINAL ISLAND MARITIME SUPPORT FACILITY

TELECOM PLAN - AREA 3

THE PORT OF LOS ANGELES
ENGINEERING DIVISION
425 S. PALOS VERDES STREET SAN PEDRO CA 90731-3309

DRAWING NUMBER: 1-3513
SHEET NUMBER: TL-05

POLAPRO1_040223_BWD

MATCHLINE, SEE DRAWING TL-05 FOR CONTINUATION

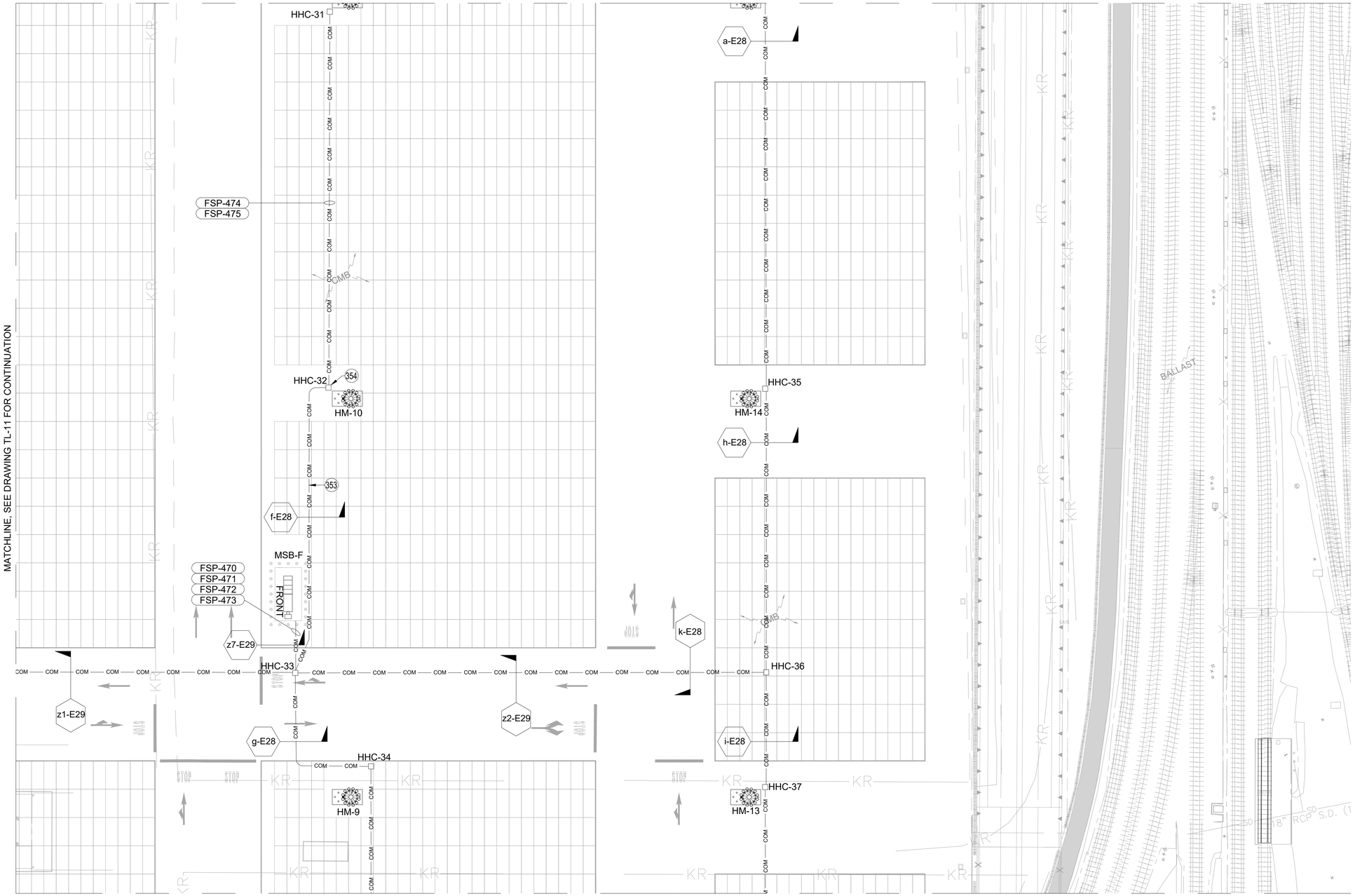

MATCHLINE, SEE DRAWING TL-11 FOR CONTINUATION

MATCHLINE, SEE DRAWING TL-07 FOR CONTINUATION

No.	CONSTRUCTION ITEM	REFERENCE DWG
353	TELECOM DUCTBANK	
354	TELECOM HANDHOLE	

GENERAL NOTES:

1. CONTRACTOR SHALL CORDINATE DEPTH OF DUCTBANKS WITH OTHER SURROUNDING UTILITIES.
2. SEE DRAWINGS E-28 AND E-29 FOR TYPICAL DUCTBANK SECTION.

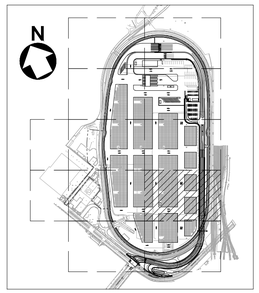

KEY MAP

40' 0' 40' 80'

SCALE: 1" = 40'

4TL-02 / TL-06 PLAN

SCALE: 1" = 40'

N

NO.	DATE	DRAWN	REVISIONS -	CHK'D	APP'D
A	3/20/25	-	30% CONCEPTUAL DESIGN		
B	4/25/25	-	FINAL CONCEPTUAL DESIGN		
C	7/18/25	-	40% DESIGN		
D	9/19/25	-	80% DESIGN		

NOT FOR CONSTRUCTION

NO.	DATE	DRAWN	REVISIONS -	CHK'D	APP'D
			80% DESIGN REVIEW SEP 19 , 2025		

Jacobs
2600 MICHELSON DRIVE, SUITE 500
IRVINE, CA 92612
T (949) 224-7500
F (949) 224-7501

REGISTERED PROFESSIONAL ENGINEER — BRET MATTHEWS — E 18650 EXP. 12/31/2026 — ELECTRICAL — STATE OF CALIFORNIA

SCALE: AS SHOWN
DRAWN: R. SHARMA
CHECKED: D. WAGNER
DESIGNED: A. MATHEWS
ENGINEER / ARCHITECT

TERMINAL ISLAND MARITIME SUPPORT FACILITY

TELECOM PLAN - AREA 4

THE PORT OF LOS ANGELES
ENGINEERING DIVISION
425 S. PALOS VERDES STREET SAN PEDRO CA 90731-3309

DRAWING NUMBER 1-3513

SHEET NUMBER TL-06

POLAPRO1_040223_BWD

MATCHLINE, SEE DRAWING TL-06 FOR CONTINUATION

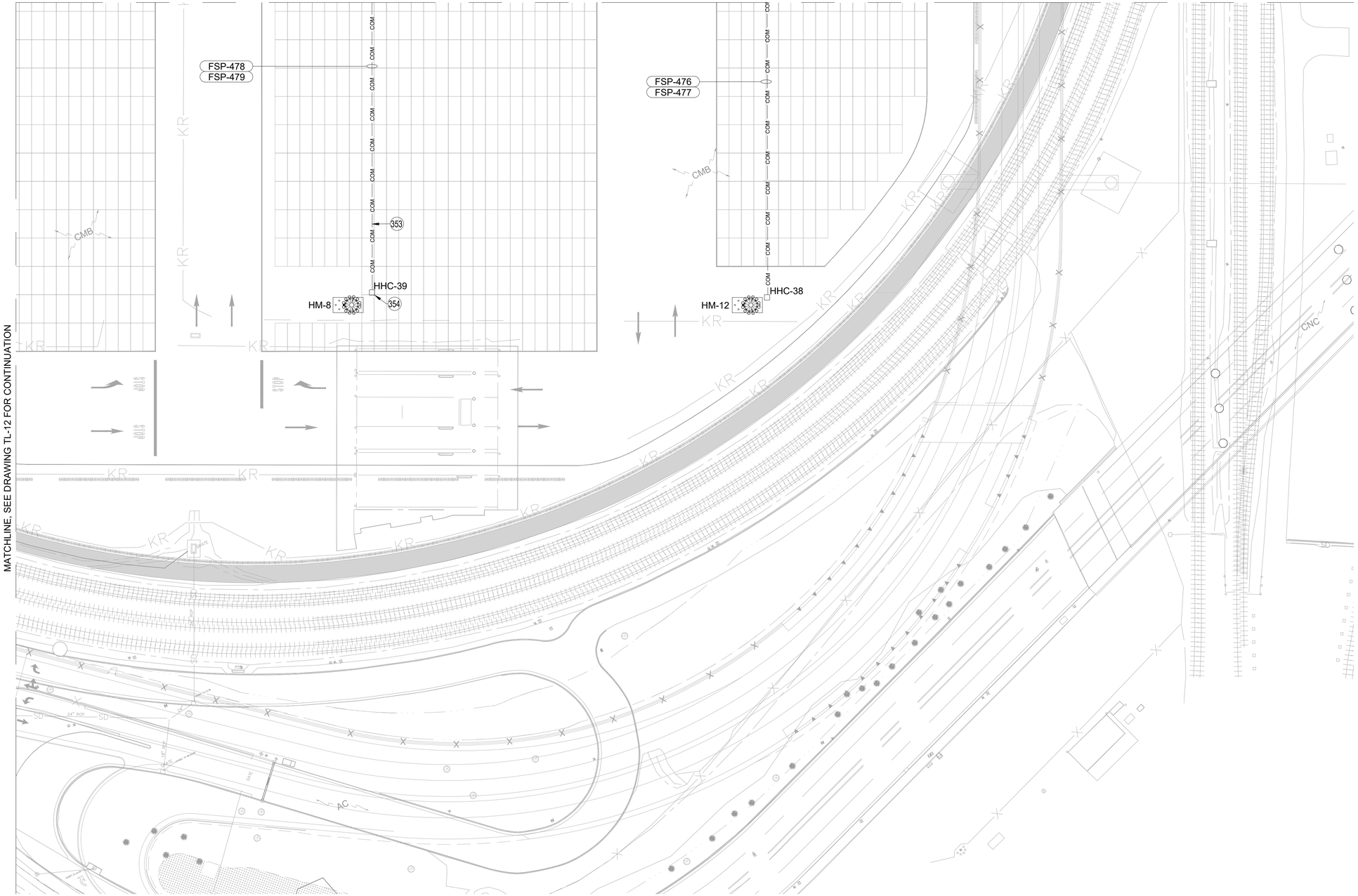

No.	CONSTRUCTION ITEM	REFERENCE DWG
353	TELECOM DUCTBANK	
354	TELECOM HANDHOLE	

GENERAL NOTES:

1. CONTRACTOR SHALL CORDINATE DEPTH OF DUCTBANKS WITH OTHER SURROUNDING UTILITIES.
2. SEE DRAWINGS E-28 AND E-29 FOR TYPICAL DUCTBANK SECTION.

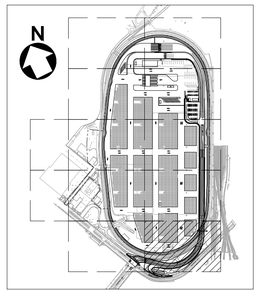

KEY MAP

40' 0' 40' 80'

SCALE: 1" = 40'

5TL-02 / TL-07 PLAN

SCALE: 1" = 40'

N

NO.	DATE	DRAWN	REVISIONS -	CHK'D	APP'D
A	3/20/25	-	30% CONCEPTUAL DESIGN		
B	4/25/25	-	FINAL CONCEPTUAL DESIGN		
C	7/18/25	-	40% DESIGN		
D	9/19/25	-	80% DESIGN		

NOT FOR CONSTRUCTION

NO.	DATE	DRAWN	REVISIONS -	CHK'D	APP'D

80% DESIGN REVIEW
SEP 19 , 2025

Jacobs
2600 MICHELSON DRIVE, SUITE 500
IRVINE, CA 92612
T: (949) 224-7500
F: (949) 224-7501

REGISTERED PROFESSIONAL ENGINEER
MEY MATHEWS
E 18650
EXP. 12/31/2026
ELECTRICAL
STATE OF CALIFORNIA

SCALE: AS SHOWN
DRAWN: R. SHARMA
CHECKED: D. WAGNER
DESIGNED: A. MATHEWS
ENGINEER / ARCHITECT

TERMINAL ISLAND MARITIME SUPPORT FACILITY

TELECOM PLAN - AREA 5

THE PORT OF LOS ANGELES
ENGINEERING DIVISION
425 S. PALOS VERDES STREET SAN PEDRO CA 90731-3309

DRAWING NUMBER: 1-3513
SHEET NUMBER: TL-07

POLAPROT_040223_BWD

No.	CONSTRUCTION ITEM	REFERENCE DWG
353	TELECOM DUCTBANK	
354	TELECOM HANDHOLE	

GENERAL NOTES:

1. CONTRACTOR SHALL CORDINATE DEPTH OF DUCTBANKS WITH OTHER SURROUNDING UTILITIES.
2. SEE DRAWINGS E-28 AND E-29 FOR TYPICAL DUCTBANK SECTION.

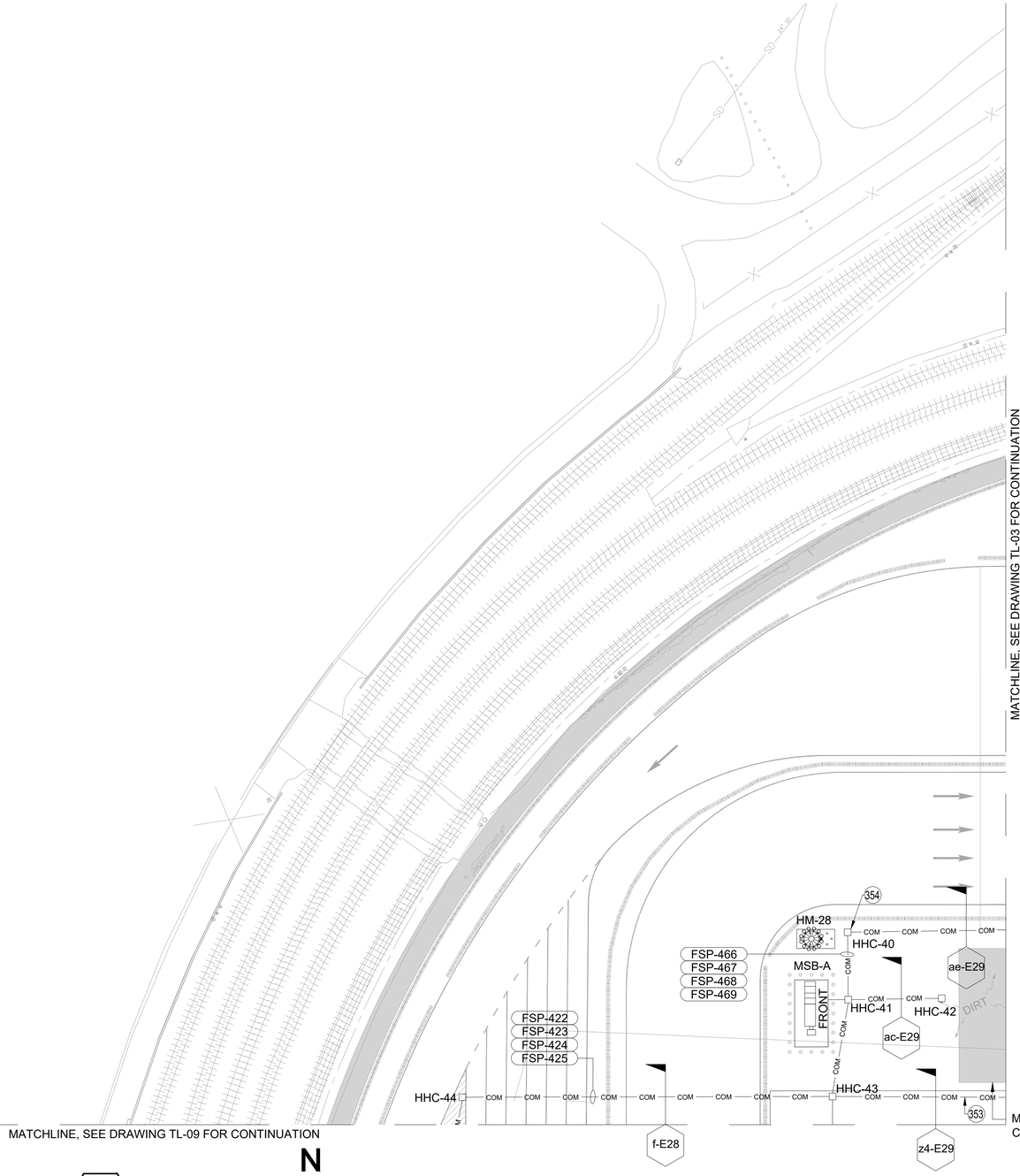

6TL-02 / TL-08 PLAN

SCALE: 1" = 40'

N

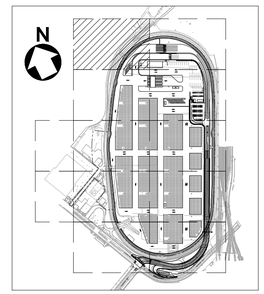

KEY MAP

40' 0' 40' 80'

SCALE: 1" = 40'

NO.	DATE	DRAWN	REVISIONS -	CHK'D	APP'D
A	3/20/25	-	30% CONCEPTUAL DESIGN		
B	4/25/25	-	FINAL CONCEPTUAL DESIGN		
C	7/18/25	-	40% DESIGN		
D	9/19/25	-	80% DESIGN		

NOT FOR CONSTRUCTION

NO.	DATE	DRAWN	REVISIONS -	CHK'D	APP'D
			80% DESIGN REVIEW SEP 19 , 2025		

Jacobs
2600 MICHELSON DRIVE, SUITE 500
IRVINE, CA 92612
T: (949) 224-7500
F: (949) 224-7501

REGISTERED PROFESSIONAL ENGINEER — ARIEY MATHEWS — E 18650 EXP. 12/31/2026 — ELECTRICAL — STATE OF CALIFORNIA

SCALE: AS SHOWN
DRAWN: R. SHARMA
CHECKED: D. WAGNER
DESIGNED: A. MATHEWS
ENGINEER / ARCHITECT

TERMINAL ISLAND MARITIME SUPPORT FACILITY

TELECOM PLAN - AREA 6

THE PORT OF LOS ANGELES
ENGINEERING DIVISION
425 S. PALOS VERDES STREET SAN PEDRO CA 90731-3309

DRAWING NUMBER: 1-3513

SHEET NUMBER: TL-08

POLAPRO1_04/2023_BWD

MATCHLINE, SEE DRAWING TL-08 FOR CONTINUATION

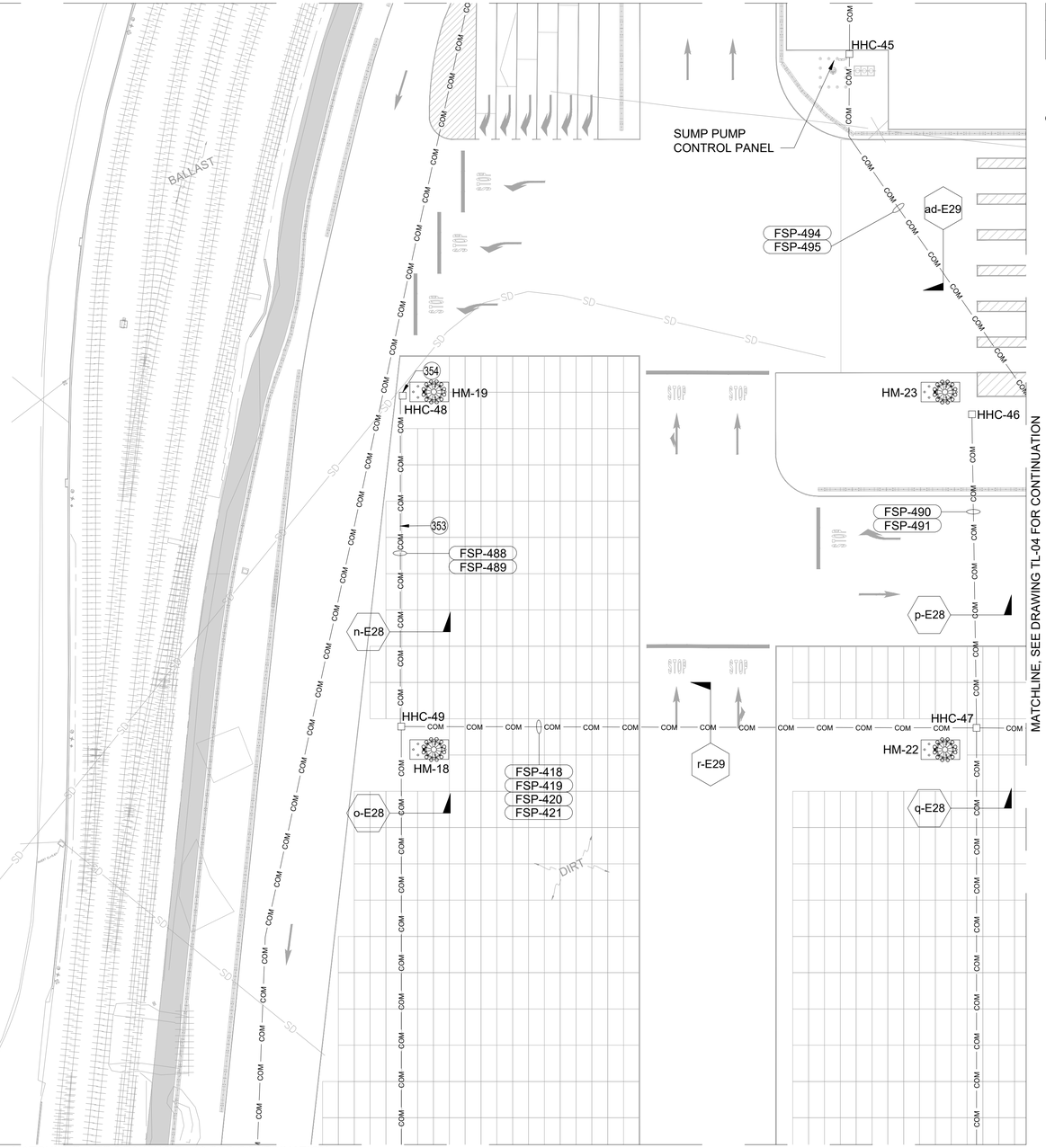

MATCHLINE, SEE DRAWING TL-10 FOR CONTINUATION

7TL-02 / TL-09 PLAN
SCALE: 1" = 40'

N

No.	CONSTRUCTION ITEM	REFERENCE DWG
353	TELECOM DUCTBANK	
354	TELECOM HANDHOLE	

GENERAL NOTES:

1. CONTRACTOR SHALL CORDINATE DEPTH OF DUCTBANKS WITH OTHER SURROUNDING UTILITIES.
2. SEE DRAWINGS E-28 AND E-29 FOR TYPICAL DUCTBANK SECTION.

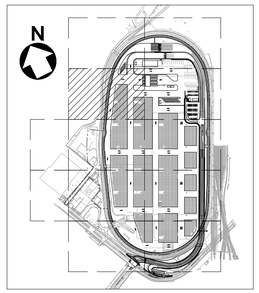

KEY MAP

40' 0' 40' 80'
SCALE: 1" = 40'

NO.	DATE	DRAWN	REVISIONS -	CHK'D	APP'D
A	3/20/25	-	30% CONCEPTUAL DESIGN		
B	4/25/25	-	FINAL CONCEPTUAL DESIGN		
C	7/18/25	-	40% DESIGN		
D	9/19/25	-	80% DESIGN		

NOT FOR CONSTRUCTION

NO.	DATE	DRAWN	REVISIONS -	CHK'D	APP'D
			80% DESIGN REVIEW SEP 19 , 2025		

Jacobs
2600 MICHELSON DRIVE, SUITE 500
IRVINE, CA 92612
T: (949) 224-7500
F: (949) 224-7501

REGISTERED PROFESSIONAL ENGINEER
KEY MATHEWS
E 18650
EXP. 12/31/2026
ELECTRICAL
STATE OF CALIFORNIA

SCALE:	AS SHOWN
DRAWN:	R. SHARMA
CHECKED:	D. WAGNER
DESIGNED:	A. MATHEWS
	ENGINEER / ARCHITECT

TERMINAL ISLAND MARITIME SUPPORT FACILITY

TELECOM PLAN - AREA 7

THE PORT OF LOS ANGELES
ENGINEERING DIVISION
425 S. PALOS VERDES STREET SAN PEDRO CA 90731-3309

DRAWING NUMBER: 1-3513
SHEET NUMBER: TL-09

POLAPROT_040223_BWD

MATCHLINE, SEE DRAWING TL-09 FOR CONTINUATION

No.	CONSTRUCTION ITEM	REFERENCE DWG
353	TELECOM DUCTBANK	
354	TELECOM HANDHOLE	

GENERAL NOTES:

1. CONTRACTOR SHALL CORDINATE DEPTH OF DUCTBANKS WITH OTHER SURROUNDING UTILITIES.
2. SEE DRAWINGS E-28 AND E-29 FOR TYPICAL DUCTBANK SECTION.

MATCHLINE, SEE DRAWING TL-05 FOR CONTINUATION

MATCHLINE, SEE DRAWING TL-11 FOR CONTINUATION

8TL-02 / TL-10 PLAN
SCALE: 1" = 40'

KEY MAP

40' 0' 40' 80'
SCALE: 1" = 40'

NO.	DATE	DRAWN	REVISIONS -	CHK'D	APP'D
A	3/20/25	-	30% CONCEPTUAL DESIGN		
B	4/25/25	-	FINAL CONCEPTUAL DESIGN		
C	7/18/25	-	40% DESIGN		
D	9/19/25	-	80% DESIGN		

NOT FOR CONSTRUCTION

80% DESIGN REVIEW
SEP 19 , 2025

Jacobs
2600 MICHELSON DRIVE, SUITE 500
IRVINE, CA 92612
T: (949) 224-7500
F: (949) 224-7501

REGISTERED PROFESSIONAL ENGINEER
ABET MATHEWS
E 18650
EXP. 12/31/2026
ELECTRICAL
STATE OF CALIFORNIA

SCALE: AS SHOWN
DRAWN: R. SHARMA
CHECKED: D. WAGNER
DESIGNED: A. MATHEWS
ENGINEER / ARCHITECT

TERMINAL ISLAND MARITIME SUPPORT FACILITY

TELECOM PLAN - AREA 8

THE PORT OF LOS ANGELES
ENGINEERING DIVISION
425 S. PALOS VERDES STREET SAN PEDRO CA 90731-3309

DRAWING NUMBER: 1-3513
SHEET NUMBER: TL-10

POLAPROT_040223_BWD

MATCHLINE, SEE DRAWING TL-10 FOR CONTINUATION

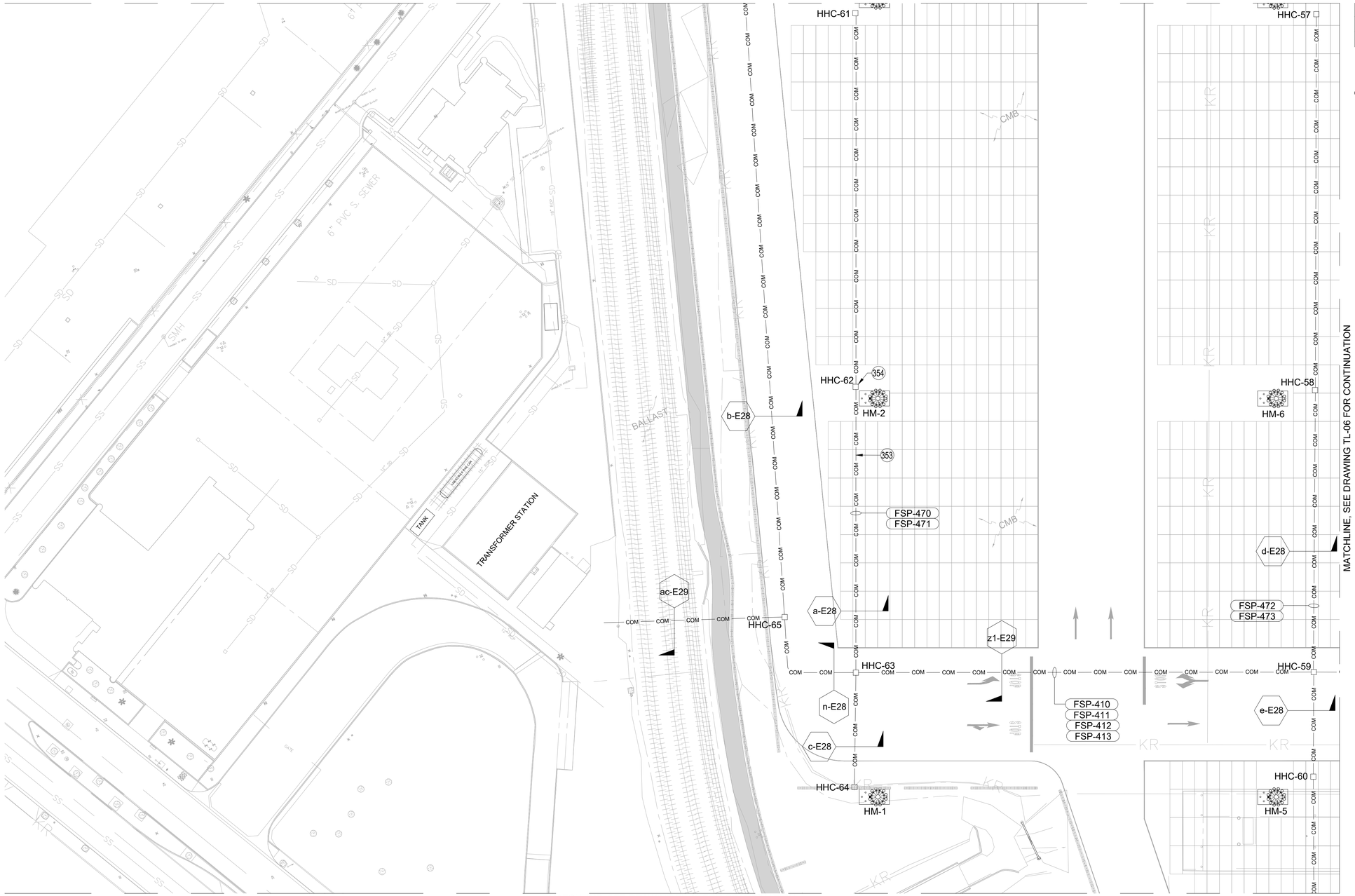

MATCHLINE, SEE DRAWING TL-06 FOR CONTINUATION

MATCHLINE, SEE DRAWING TL-12 FOR CONTINUATION

No.	CONSTRUCTION ITEM	REFERENCE DWG
353	TELECOM DUCTBANK	
354	TELECOM HANDHOLE	

GENERAL NOTES:

1. CONTRACTOR SHALL CORDINATE DEPTH OF DUCTBANKS WITH OTHER SURROUNDING UTILITIES.
2. SEE DRAWINGS E-28 AND E-29 FOR TYPICAL DUCTBANK SECTION.

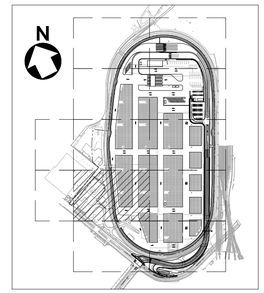

9TL-02 / TL-11 PLAN
SCALE: 1" = 40'

N

40' 0' 40' 80'
SCALE: 1" = 40'

NO.	DATE	DRAWN	REVISIONS -	CHK'D	APP'D
A	3/20/25	-	30% CONCEPTUAL DESIGN		
B	4/25/25	-	FINAL CONCEPTUAL DESIGN		
C	7/18/25	-	40% DESIGN		
D	9/19/25	-	80% DESIGN		

NOT FOR CONSTRUCTION

80% DESIGN REVIEW
SEP 19 , 2025

Jacobs
2600 MICHELSON DRIVE, SUITE 500
IRVINE, CA 92612
T: (949) 224-7500
F: (949) 224-7501

REGISTERED PROFESSIONAL ENGINEER
MATTHEW S. MATHEWS
E 18650
EXP. 12/31/2026
ELECTRICAL
STATE OF CALIFORNIA

SCALE: AS SHOWN
DRAWN: R. SHARMA
CHECKED: D. WAGNER
DESIGNED: A. MATHEWS
ENGINEER / ARCHITECT

TERMINAL ISLAND MARITIME SUPPORT FACILITY

TELECOM PLAN - AREA 9

THE PORT OF LOS ANGELES
ENGINEERING DIVISION
425 S. PALOS VERDES STREET SAN PEDRO CA 90731-3309

DRAWING NUMBER: 1-3513
SHEET NUMBER: TL-11

POLAPROT_043023_BWD

MATCHLINE, SEE DRAWING TL-11 FOR CONTINUATION

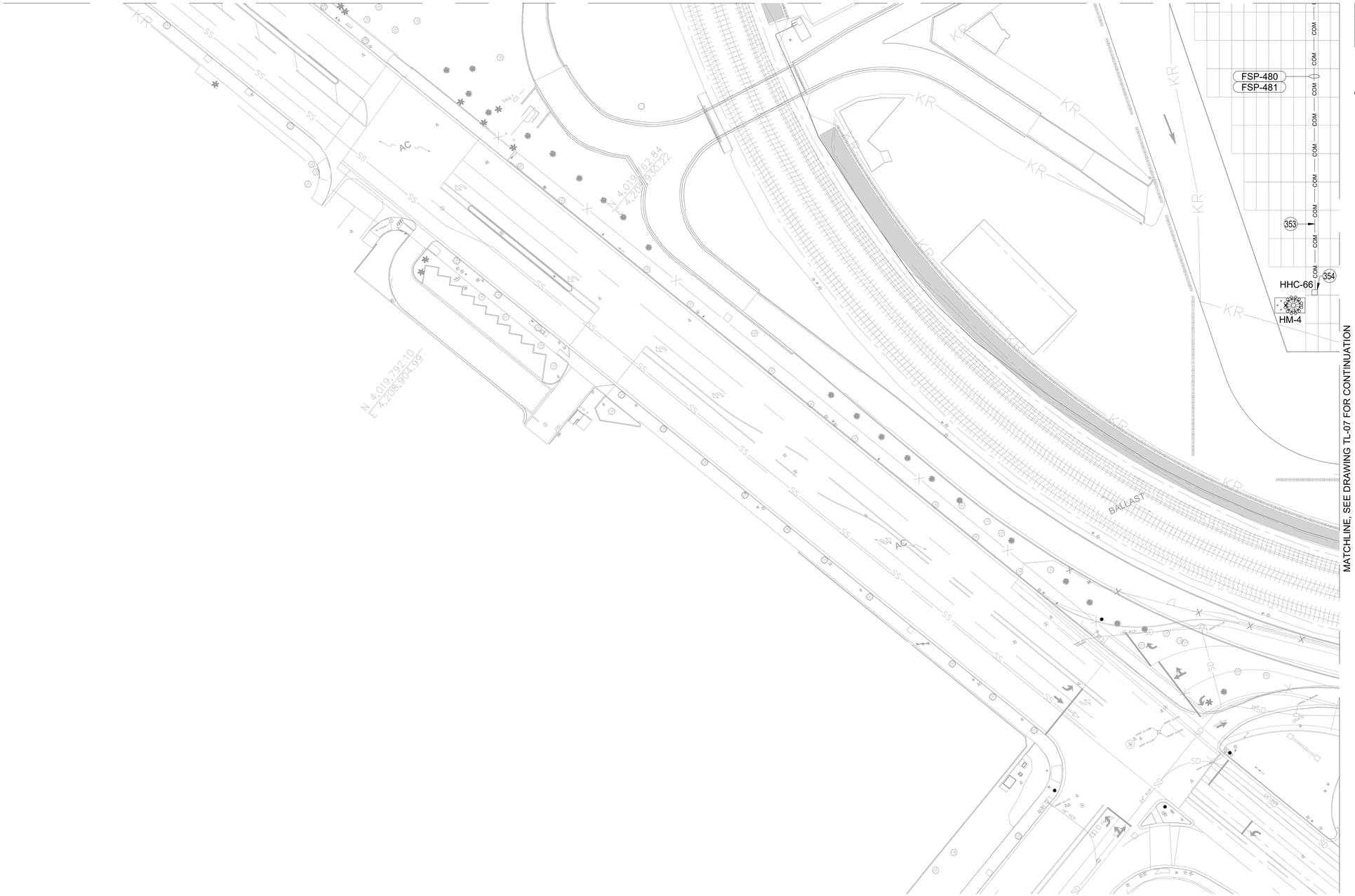

No.	CONSTRUCTION ITEM	REFERENCE DWG
353	TELECOM DUCTBANK	
354	TELECOM HANDHOLE	

GENERAL NOTES:

1. CONTRACTOR SHALL CORDINATE DEPTH OF DUCTBANKS WITH OTHER SURROUNDING UTILITIES.
2. SEE DRAWINGS E-28 AND E-29 FOR TYPICAL DUCTBANK SECTION.

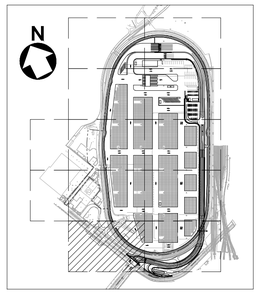

KEY MAP

40' 0' 40' 80'

SCALE: 1" = 40'

10TL-02 / TL-12 PLAN

SCALE: 1" = 40'

N

NO.	DATE	DRAWN	REVISIONS -	CHK'D	APP'D
A	3/20/25	-	30% CONCEPTUAL DESIGN		
B	4/25/25	-	FINAL CONCEPTUAL DESIGN		
C	7/18/25	-	40% DESIGN		
D	9/19/25	-	80% DESIGN		

NOT FOR CONSTRUCTION

NO.	DATE	DRAWN	REVISIONS -	CHK'D	APP'D
			80% DESIGN REVIEW SEP 19 , 2025		

Jacobs
2600 MICHELSON DRIVE, SUITE 500
IRVINE, CA 92612
T - (949) 224-7500
F - (949) 224-7501

REGISTERED PROFESSIONAL ENGINEER — ELECTRICAL — STATE OF CALIFORNIA — E 18650 EXP. 12/31/2026

SCALE: AS SHOWN
DRAWN: R. SHARMA
CHECKED: D. WAGNER
DESIGNED: A. MATHEWS
ENGINEER / ARCHITECT

TERMINAL ISLAND MARITIME SUPPORT FACILITY

TELECOM PLAN - AREA 10

THE PORT OF LOS ANGELES
ENGINEERING DIVISION
425 S. PALOS VERDES STREET SAN PEDRO CA 90731-3309

DRAWING NUMBER: 1-3513
SHEET NUMBER: TL-12

POLAPRO1_042023_BWD

PROJECT ANALYSIS:

LOT AREA:	80 ACRES OR 3,484,800SF (APPROXIMATE)
OVERALL BUILDING AREA:	8,160 SF (ROADABILITY CANOPY) 440 SF (RESTROOM FACILITY)
BUILDING OCCUPANCY GROUPS:	S-1 (STORAGE) (ROADABILITY CANOPY) B (BUSINESS) (RESTROOM FACILITY)
BUILDING USE:	INDUSTRIAL
TYPE OF CONSTRUCTION:	TYPE II-B
NUMBER OF STORIES:	ONE (1), BOTH STRUCTURES
FIRE HAZARD SEVERITY ZONE:	NONE
OVERALL BUILDING HEIGHT:	24'-0" (ROADABILITY CANOPY) 14'-4" (RESTROOM FACILITY)

GENERAL NOTES:

1. SEE SHEETS A-0.8. A-0.9 & A-0.10 FOR ACCESSIBLE REFERENCE.

ACCESSIBILITY ANALYSIS PER 2022 CBC CHAPTER 11B ACCESSIBILITY TO THE PUBLIC BUILDINGS, PUBLIC ACCOMMODATIONS, COMMERCIAL BUILDINGS, AND PUBLIC HOUSE.

PER CBC 11B-201.1 NEWLY CONSTRUCTED BUILDINGS AND FACILITIES SHALL COMPLY WITH DIVISION 2

SITE LEGEND

ACCESSIBLE ROUTE

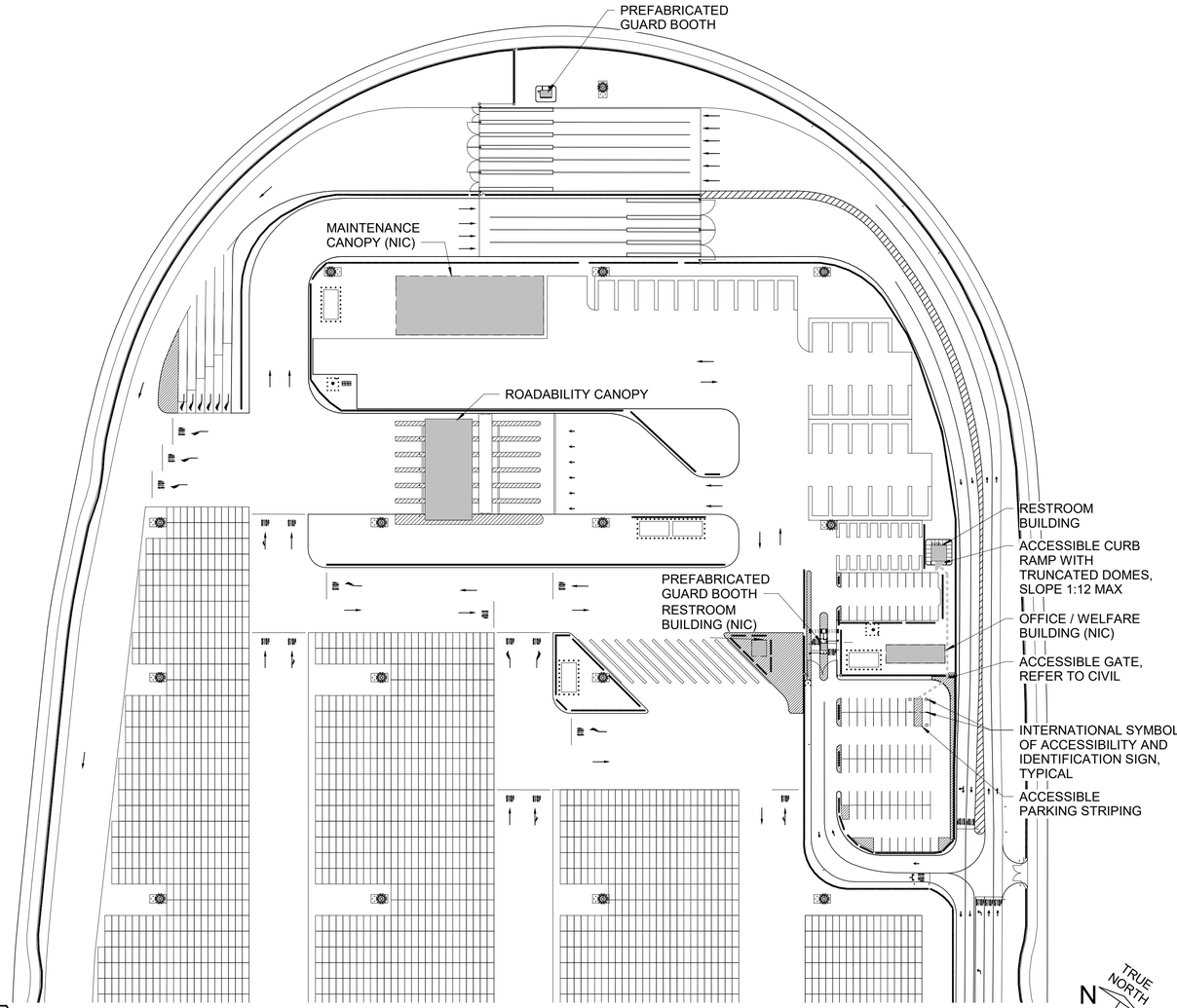

1A-0.0 / A-0.0 SITE PLAN

SCALE: 1" = 100'-0"

CODE ANALYSIS - RESTROOM BUILDING

NO.	ELEMENT	ASSESMENT / CALCULATION	CBC CODE SECTION(S)/ REFERENCE	CODE REMARKS
1	USE AND OCCUPANCY CLASSIFICATION	SINGLE USE, B - BUSINESS	311.2	
2	TYPE OF CONSTRUCTION	TYPE IIB - NON-COMBUSTIBLE, NON-SPRINKLERED	TABLE 601	STRUCTURE IS NOT SPRINKLERED
3	ALLOWABLE BUILDING HEIGHT / AREA PER STORY	55 FEET / 23,000	TABLE 504.3 / 506.2	
4	ACTUAL BUILDING HEIGHT / AREA	14 FEET 5 INCHES / 440 SF		
5	FIRE RESISTANCE RATINGS OF BUILDING ELEMENTS			
5.1	PRIMARY STRUCTURAL FRAME: - STRUCTURAL MEMBERS HAVING DIRECT CONNECTION TO COLUMNS - MEMBERS OF FLOOR AND ROOF CONSTRUCTION HAVING DIRECT CONNECTION TO COLUMNS - BRACING MEMBERS THAT ARE ESSENTIAL TO THE VERTICAL STABILITY OF THE PRIMARY STRUCTURAL FRAME UNDER GRAVITY LOADING	0 HR		
5.2	EXTERIOR LOADBEARING WALLS	0 HR		CMU WALLS
5.3	INTERIOR LOADBEARING WALLS AND PARTITIONS	0 HR		
5.4	EXTERIOR NON-LOADBEARING WALLS	0 HR		
5.5	INTERIOR NON-LOADBEARING WALLS AND PARTITIONS	0 HR		METAL STUDS W/ GYPSUM BOARD
5.6	ROOF CONSTRUCTION AND SECONDARY MEMBERS	0 HR		PLYWOOD DOOR DECKING IS FIRE TREATED
6	MEANS OF EGRESS			
6.1	MAXIMUM FLOOR AREA / OCCUPANT	BUSINESS - 150 GROSS	TABLE 1004.1	
6.2	OCCUPANT LOAD	3 OCCUPANTS		4 RESTROOMS, ACTUAL OCCUPANCY COUNT IS 4 BASED ON USE
6.3	MAXIMUM EXIT ACCESS TRAVEL DISTANCE	200 FT (WITHOUT SPRINKLERS) 300 FT (WITH SPRINKLERS)	TABLE 1017.2	
6.4	COMMON PATH OF EGRESS TRAVEL DISTANCE	100 FT (WITH SPRINKLERS), 100 FT (WITHOUT SPRINKLERS)	TABLE 1006.2.1	LESS THAN 30 OCCUPANTS
6.5	DEAD END	50 FT (WITH SPRINKLERS), 20 FT (WITHOUT SPRINKLERS)	1020.4	
6.6	EXITS AND EXIT ACCESS DOORWAYS	TWO EXIT SEPARATION DISTANCE WITHOUT AUTOMATIC SPRINKLER SYSTEM	1015.2.1	
6.7	EXIT WIDTHS	B OCCUPANCY OTHER: 0.2" PER OCCUPANT	1005.1	

CODE ANALYSIS - ROADABILITY CANOPY

NO.	ELEMENT	ASSESSMENT / CALCULATION	CBC CODE SECTION(S) / REFERENCE	CODE REMARKS
1	USE AND OCCUPANCY CLASSIFICATION	SINGLE USE, S-1 - STORAGE	311.2	
2	TYPE OF CONSTRUCTION	IIB – NON-COMBUSTIBLE, NON-SPRINKLERED	TABLE 601	STRUCTURE IS NOT SPRINKLERED
3	ALLOWABLE BUILDING HEIGHT / AREA PER STORY	55' / 17,500	TABLE 504.3 / 506.2	ROOF COVERAGE = 9,344 SF
4	ACTUAL BUILDING HEIGHT / AREA	24'-0" / ROOF AREA 9,344 SF		
5	FIRE RESISTANCE RATINGS OF BUILDING ELEMENTS			
5.1	PRIMARY STRUCTURAL FRAME: - STRUCTURAL MEMBERS HAVING DIRECT CONNECTION TO COLUMNS - MEMBERS OF FLOOR AND ROOF CONSTRUCTION HAVING DIRECT CONNECTION TO COLUMNS - BRACING MEMBERS THAT ARE ESSENTIAL TO THE VERTICAL STABILITY OF THE PRIMARY STRUCTURAL FRAME UNDER GRAVITY LOADING	0 HR		
5.2	EXTERIOR LOADBEARING WALLS	0 HR		
5.3	INTERIOR LOADBEARING WALLS AND PARTITIONS	0 HR		
5.4	EXTERIOR NON-LOADBEARING WALLS	0 HR		
5.5	INTERIOR NON-LOADBEARING WALLS AND PARTITIONS	0 HR		
5.6	ROOF CONSTRUCTION AND SECONDARY MEMBERS	0 HR		
6	MEANS OF EGRESS	OPEN STRUCTURE, NO WALLS		
6.1	MAXIMUM FLOOR AREA / OCCUPANT	INDUSTRIAL – 100 GSF	TABLE 1004.1.2	
6.2	OCCUPANT LOAD	10 OCCUPANTS	-	
6.3	MAXIMUM EXIT ACCESS TRAVEL DISTANCE	200 FT (WITHOUT SPRINKLERS) 300 FT (WITH SPRINKLERS)	TABLE 1017.2	OVERAL CANOPY SIZE: 64 FEET BY 146 FEET
6.4	COMMON PATH OF EGRESS TRAVEL DISTANCE	100 FT (WITH SPRINKLERS), 100 FT (WITHOUT SPRINKLERS)	TABLE 1006.2.1	LESS THAN 30 OCCUPANTS
6.5	DEAD END	50 FT (WITH SPRINKLERS), 20 FT (WITHOUT SPRINKLERS)	1020.4	NO DEAD END CORRIDORS
6.6	EXITS AND EXIT ACCESS DOORWAYS	TWO EXIT SEPARATION DISTANCE WITHOUT AUTOMATIC SPRINKLER SYSTEM MINIMUM 1/2 THE OVERALL DIAGONAL (EXCEPTION #2 APPLIES) PROVIDE TWO MEANS OF EGRESS WHEN OCCUPANT LOAD EXCEEDS 49	1015.2.1	
6.7	EXIT WIDTHS		1005.1	CANOPY, NO EXTERIOR WALLS

NO.	DATE	DRAWN	REVISIONS -	CHK'D	APP'D
A	3/20/25	-	30 % CONCEPT DESIGN		
B	4/25/25	-	FINAL CONCEPT DESIGN		
C	7/18/25	-	40 % DESIGN		
D	9/19/25	-	80% DESIGN		

NOT FOR CONSTRUCTION

80% DESIGN

Jacobs
2600 MICHELSON DRIVE, SUITE 500
IRVINE, CA 92612
T: (949) 224-7500
F: (949) 224-7501

LICENSED ARCHITECT — ROBERT G. WINSTEAD — C-24259 — 02/28/27 Renewal — STATE OF CALIFORNIA

SCALE:	AS SHOWN
DRAWN:	A. TERMYNA
CHECKED:	D. WINSTEAD
DESIGNED:	R. SMITH
	ENGINEER / ARCHITECT

TERMINAL ISLAND MARITIME SUPPORT FACILITY

ARCHITECTURAL SITE PLAN & CODE ANALYSIS

THE PORT OF LOS ANGELES
ENGINEERING DIVISION
425 S. PALOS VERDES STREET SAN PEDRO CA 90731-3309

DRAWING NUMBER 1-3513 | SHEET NUMBER A-0.0

RVT: Autodesk Docs://US CA_D337190_POLA TIMSF\1-3513-JEDI-12A_WaterRoom_R25.rvt
DATE: 9/15/2025 2:14:19 PM

CITY OF LOS ANGELES:
DEPARTMENT OF BUILDING & SAFETY - ENGINEERING BUREAU
COMMERCIAL ACCESSIBILITY PLAN REVIEW CHECKLIST

A. SITE DEVELOPMENT AND ACCESSIBLE ROUTE OF TRAVEL

1. ACCESSIBLE ROUTE OF TRAVEL IS DEFINED AS "A CONTINUOUS UNOBSTRUCTED PATH CONNECTING ALL ACCESSIBLE ELEMENTS AND SPACES IN AN ACCESSIBLE BUILDING OR FACILITY THAT CAN BE NEGOTIATED BY A PERSON WITH A DISABILITY USING A WHEELCHAIR AND THAT IS ALSO SAFE FOR AND USABLE BY PERSONS WITH OTHER DISABILITIES, AND THAT IS CONSISTENT WITH THE DEFINITION OF "PATH OF TRAVEL". (1102B)

2. SITE DEVELOPMENT AND GRADING SHALL BE DESIGNED TO PROVIDE ACCESS TO ALL ENTRANCES AND EXTERIOR GROUND FLOOR EXITS, AND ACCESS TO NORMAL PATHS OF TRAVEL, AND WHERE NECESSARY TO PROVIDE ACCESS, SHALL INCORPORATE PEDESTRIAN RAMPS, CURB RAMPS, ETC. (1127B.1)

3. AT LEAST ONE ACCESSIBLE ROUTE WITHIN THE BOUNDARY OF THE SITE SHALL BE PROVIDED FROM PUBLIC TRANSPORTATION STOPS, ACCESSIBLE PARKING AND ACCESSIBLE PASSENGER LOADING ZONES AND PUBLIC STREETS OR SIDEWALKS TO THE ACCESSIBLE BUILDING ENTRANCE THEY SERVE. THE ACCESSIBLE ROUTE SHALL, TO THE MAXIMUM EXTENT FEASIBLE, COINCIDE WITH THE ROUTE FOR THE GENERAL PUBLIC. (1114B.1.2)

4. THE ACCESSIBLE ROUTE OF TRAVEL SHALL BE THE MOST PRACTICAL DIRECT ROUTE BETWEEN ACCESSIBLE BUILDING ENTRANCES, ACCESSIBLE SITE FACILITIES, AND THE ACCESSIBLE ENTRANCE TO THE SITE. IF ACCESS IS PROVIDED FOR PEDESTRIANS FROM A PEDESTRIAN TUNNEL OR ELEVATED WALKWAY, ENTRANCES TO THE BUILDING FROM EACH TUNNEL OR WALKWAY MUST BE ACCESSIBLE. (1127B.1)

5. WHEN MORE THAN ONE BUILDING OR FACILITY IS LOCATED ON A SITE, ACCESSIBLE ROUTES OF TRAVEL COMPLYING WITH SECTION 1114B.1.2 SHALL BE PROVIDED BETWEEN BUILDINGS AND ACCESSIBLE SITE FACILITIES, ACCESSIBLE ELEMENTS, AND ACCESSIBLE SPACES THAT ARE ON THE SAME SITE. (1127B.1)

6. WHEN A BUILDING OR PORTION OF A BUILDING IS REQUIRED TO BE ACCESSIBLE OR ADAPTABLE, AN ACCESSIBLE ROUTE OF TRAVEL COMPLYING WITH SECTIONS 1102B, 1114B, 1124B, 1133B.3, 1133B.5, 1133B.7 AND 1133B.8.6 SHALL BE PROVIDED TO ALL PORTIONS OF THE BUILDING, TO ACCESSIBLE BUILDING ENTRANCES, AND BETWEEN THE BUILDING AND THE PUBLIC WAY. ALL WALKS, HALLS, CORRIDORS, AISLES, SKYWALKS, TUNNELS AND OTHER SPACES THAT ARE PART OF AN ACCESSIBLE ROUTE SHALL COMPLY WITH THE APPLICABLE PROVISIONS OF THE CODE. (1114B.1.2)

7. EXCEPT WITHIN AN INDIVIDUAL DWELLING UNIT, AN ACCESSIBLE ROUTE OF TRAVEL SHALL NOT PASS THROUGH KITCHENS, STORAGE ROOMS, RESTROOMS, CLOSETS OR OTHER SPACES USED FOR SIMILAR PURPOSES. (1114B.1.2)

8. AT LEAST ONE ACCESSIBLE ROUTE SHALL CONNECT THE FOLLOWING: (1114B.1.2)

a. ACCESSIBLE BUILDINGS, FACILITIES, ELEMENTS, AND SPACES THAT ARE ON THE SAME SITE.

b. ACCESSIBLE BUILDING OR FACILITY ENTRANCES WITH ALL ACCESSIBLE SPACES AND ELEMENTS AND WITH ALL ACCESSIBLE DWELLING UNITS WITHIN THE BUILDING OR FACILITY.

c. THE ACCESSIBLE ROUTE SHALL, TO THE MAXIMUM EXTENT FEASIBLE COINCIDE WITH THE ROUTE FOR THE GENERAL PUBLIC.

d. ACCESSIBLE ENTRANCE OF EACH ACCESSIBLE DWELLING UNIT WITH THOSE EXTERIOR AND INTERIOR SPACES AND FACILITIES THAT SERVE THE ACCESSIBLE DWELLING UNIT.

9. WHERE MORE THAN ONE ROUTE OF TRAVEL IS PROVIDED, ALL ROUTES SHALL BE ACCESSIBLE. UNLESS OTHERWISE INDICATED, THE MINIMUM CLEAR WIDTH OF AN ACCESSIBLE ROUTE SHALL NOT BE LESS THAN 36 INCHES EXCEPT AT DOORS COMPLYING WITH SECTION 1133B.2 OR OBSTRUCTIONS COMPLYING WITH FIGURE 11B-10. IF A PERSON IN A WHEELCHAIR MUST MAKE A TURN AROUND AN OBSTRUCTION THE MINIMUM CLEAR WIDTH OF THE ACCESSIBLE ROUTE SHALL BE AS SHOWN IN FIGURE 11B-5E(A) AND (B). (1114B.1.2)

B. WALKS AND SIDEWALKS

1. WALKS AND SIDEWALKS SUBJECT TO THESE REGULATIONS SHALL HAVE A CONTINUOUS COMMON SURFACE, NOT INTERRUPTED BY STEPS OR BY ABRUPT CHANGES IN LEVEL EXCEEDING ½ INCH. (1133B.7.1)

2. WALKS AND SIDEWALKS SHALL BE 48 INCHES MINIMUM IN WIDTH. (1133B.7.1, FIG 11B-27(A))

3. CHANGES IN LEVEL UP TO ¼ INCH MAY BE VERTICAL AND WITHOUT EDGE TREATMENT. (1124B.2)

4. CHANGES IN LEVEL BETWEEN ¼ INCH AND ½ INCH SHALL BE BEVELED WITH A SLOPE NO GREATER THAN ONE UNIT VERTICAL IN 2 UNITS HORIZONTAL (50 PERCENT SLOPE). (1124B.2)

5. CHANGES IN LEVEL GREATER THAN ½ INCH SHALL BE ACCOMPLISHED BY MEANS OF A CURB RAMP, RAMP, OR ELEVATOR THAT COMPLIES WITH SECTION 1127B.5, 1133B.5, OR 1116B.1, RESPECTIVELY. (1124B.2)

6. WALK AND SIDEWALK SURFACES SHALL BE SLIP-RESISTANT AS FOLLOWS: (1133B.7.1)

a. SURFACES WITH LESS THAN 6 PERCENT SLOPE SHALL BE AT LEAST A SLIP -RESISTANT AS THAT DESCRIBED AS A MEDIUM SALTED FINISH. (1133B.7.1.1)

b. SURFACES WITH A 6 PERCENT OR GREATER SLOPE SHALL BE SLIP-RESISTANT. (1133B.7.1.2)

7. WHEN THE SLOPE IN THE DIRECTION OF TRAVEL OF ANY WALK EXCEEDS ONE UNIT VERTICAL IN 20 UNITS HORIZONTAL (5 PERCENT SLOPE), IT SHALL COMPLY WITH THE PROVISIONS OF SECTION 1133B.5. (1133B.7.3)

8. WALK AND SIDEWALK SURFACE CROSS SLOPES SHALL NOT EXCEED ONE UNIT VERTICAL IN 50 UNITS HORIZONTAL (2 PERCENT SLOPE). (1133B.7.1.3)

9. ALL WALKS WITH CONTINUOUS GRADIENTS SHALL HAVE LEVEL AREAS AT LEAST 5 FEET IN LENGTH AT INTERVALS OF 400 FEET MAXIMUM. (1133B.7.5)

10. LEVEL AREA OF WALKS SHALL EXTEND 24 INCHES TO THE SIDE OF THE STRIKE EDGE OF A DOOR OR GATE THAT SWINGS TOWARD THE WALK. (1133B.7.5, FIG 11B-26B)

11. WALKS, SIDEWALKS, AND PEDESTRIAN WAYS SHALL BE FREE OF GRATINGS WHENEVER POSSIBLE. FOR GRATINGS LOCATED IN THE SURFACE OF ANY OF THESE AREAS, GRID OPENINGS IN GRATINGS SHALL BE LIMITED TO ½ INCH IN THE DIRECTION OF TRAFFIC FLOW. IF GRATINGS HAVE ELONGATED OPENINGS, THEY SHALL BE PLACED SO THAT THE LONG DIMENSION IS PERPENDICULAR TO THE DOMINANT DIRECTION OF TRAVEL. (1133B7.2, FIG 11B-7E(A))

C. RAMPS (EXTERIOR OR INTERIOR)

1. ANY PATH OF TRAVEL SHALL BE CONSIDERED A RAMP IF ITS SLOPE IS GREATER THAN ONE UNIT VERTICAL IN 20 UNITS HORIZONTAL (5 PERCENT SLOPE). (1133B.5.1)

2. THE MAXIMUM SLOPE OF A RAMP SHALL BE ONE UNIT VERTICAL IN 12 UNITS HORIZONTAL (8.33 PERCENT SLOPE). THE MAXIMUM RISE FOR ANY RUN SHALL BE 30 INCHES. THE LEAST POSSIBLE SLOPE SHALL BE USED FOR ANY RAMP. (1133B.5.3)

3. THE CROSS SLOPE OF RAMP SURFACES SHALL BE NO GREATER THAN ONE UNIT VERTICAL IN 50 UNITS HORIZONTAL (2 PERCENT SLOPE). (1133B.5.3.1)

4. RAMPS SHALL HAVE A MINIMUM CLEAR WIDTH OF 48 INCHES, UNLESS REQUIRED TO BE WIDER BY SOME OTHER PROVISION OF THIS CODE. (1133B.5.2)

5. RAMPS SERVING ENTRANCES TO BUILDINGS WHERE THE RAMP IS THE ONLY EXIT DISCHARGE PATH AND IT SERVES AN OCCUPANT LOAD OF 300 OR MORE SHALL HAVE A MINIMUM CLEAR WIDTH OF 60 INCHES. (1133B.5.2)

6. LEVEL LANDINGS SHALL BE PROVIDED AT THE TOP AND BOTTOM OF EACH RAMP. (1133B.5.4.1, FIG 11B-38 & 39)

7. INTERMEDIATE LANDINGS SHALL BE PROVIDED AT INTERVALS NOT EXCEEDING 30 INCHES OF VERTICAL RISE AND AT EACH CHANGE OF DIRECTION. (1133B.5.4.1, FIG 11B-38 & 39)

8. TOP LANDINGS SHALL BE NOT LESS THAN 60 INCHES WIDE AND SHALL HAVE A LENGTH OF NOT LESS THAN 60 INCHES IN THE DIRECTION OF RAMP RUN. LANDINGS AT THE BOTTOM OF RAMPS SHALL HAVE A DIMENSION IN THE DIRECTION OF RAMP RUN OF NOT LESS THAN 72 INCHES. (1133B.5.4.2, FIG 11B-38 & 39)

9. DOORS IN ANY POSITION SHALL NOT REDUCE THE MINIMUM DIMENSION OF THE LANDING TO LESS THAN 42 INCHES AND SHALL NOT REDUCE THE REQUIRED WIDTH BY MORE THAN 3 INCHES WHEN FULLY OPEN. (1133B.5.4.4, FIG 11B-39(B))

10. DOORS AT RAMP LANDINGS SHALL COMPLY WITH THE MANEUVERING CLEARANCE REQUIREMENTS OF SECTION 1133B.2.4.2, AND THE REQUIREMENTS OF SECTION 1133B.5.4.4. (1133B.5.4.3, FIG 11B-39)

11. ALL RAMP LANDINGS SHALL BE LEVEL WITH MAXIMUM SLOPE IN ANY DIRECTION NOT TO EXCEED ONE UNIT VERTICAL IN 50 UNITS HORIZONTAL (2 PERCENT SLOPE). (1133B.5.4.1, 1102B)

12. AT BOTTOM AND INTERMEDIATE LANDINGS, THE WIDTH SHALL BE AT LEAST THE SAME AS REQUIRED FOR THE RAMP. (1133B.5.4.5, FIG 11B-38 & 39)

13. INTERMEDIATE AND BOTTOM LANDINGS AT A CHANGE OF DIRECTION IN EXCESS OF 30 DEGREES SHALL HAVE A DIMENSION IN THE DIRECTION OF RAMP RUN OF NOT LESS THAN 72 INCHES TO ACCOMMODATE THE HANDRAIL EXTENSION. (1133B.5.4.6, FIG 11B-38)

14. OTHER INTERMEDIATE LANDINGS SHALL HAVE A DIMENSION IN THE DIRECTION OF RAMP RUN OF NOT LESS THAN 60 INCHES. (1133B.5.4.7, FIG 11B-38)

15. HANDRAILS ARE REQUIRED ON RAMPS THAT PROVIDE ACCESS IF THE RAMP SLOPE EXCEEDS ONE UNIT VERTICAL IN 20 UNITS HORIZONTAL (5 PERCENT SLOPE), EXCEPT THAT AT EXTERIOR DOOR LANDINGS, HANDRAILS ARE NOT REQUIRED ON RAMPS LESS THAN 6 INCHES RISE OR 72 INCHES IN LENGTH. (1133B.5.5.1)

16. HANDRAILS SHALL BE PLACED ON EACH SIDE OF EACH RAMP, SHALL BE CONTINUOUS THE FULL LENGTH OF THE RAMP, SHALL BE 34 TO 38 INCHES ABOVE THE RAMP SURFACE TO THE TOP OF THE HANDRAILS, SHALL EXTEND A MINIMUM OF 1 FOOT BEYOND THE TOP AND BOTTOM OF THE RAMP, AND SHALL PARALLEL THE FLOOR OR GROUND SURFACE. HANDRAILS SHALL ALWAYS BE CONTINUOUS AND THE ENDS OF HANDRAILS SHALL BE EITHER ROUNDED OR RETURNED SMOOTHLY TO THE FLOOR, WALL OR POST. (1133B.5.5.1, FIG 11B-27(B) & (C))

17. THE GRIP PORTION OF HANDRAILS SHALL BE NOT LESS THAN 1-1/4 INCHES NOR MORE THAN 1-1/2 INCHES IN CROSS SECTIONAL NOMINAL DIMENSION, OR THE SHAPE SHALL PROVIDE AN EQUIVALENT GRIPPING SURFACE, AND ALL SURFACES SHALL BE SMOOTH WITH NO SHARP CORNERS. HANDRAILS SHALL NOT ROTATE WITHIN THEIR FITTINGS. (1133B.5.5.1, FIG 11B-36)

18. HANDRAILS PROJECTING FROM A WALL SHALL HAVE A SPACE OF 1 1/2 INCHES BETWEEN THE WALL AND THE HANDRAIL. (1133B.5.5.1, FIG 11B-36)

a. HANDRAILS MAY BE LOCATED IN A RECESS IF THE RECESS IS A MAXIMUM OF 3 INCHES DEEP AND EXTENDS AT LEAST 18 INCHES ABOVE THE TOP OF THE RAIL. (1133B.5.5.1, FIG 11B-36)

b. ANY WALL OR OTHER SURFACE ADJACENT TO HANDRAILS SHALL BE FREE OF SHARP OR ABRASIVE ELEMENTS. EDGES SHALL HAVE A MINIMUM RADIUS OF 1/8 INCH. (1133B.5.5.1, FIG 11B-36)

c. HANDRAILS MAY PROJECT INTO THE REQUIRED CLEAR WIDTH A DISTANCE OF 3 1/2 INCHES MAXIMUM FROM EACH SIDE OF A RAMP AT THE HANDRAIL HEIGHT. (1133B.5.5.1)

19. IN EXISTING BUILDINGS OR FACILITIES WHERE THE EXTENSION OF THE HANDRAIL IN THE DIRECTION OF THE RAMP RUN WOULD CREATE A HAZARD, THE EXTENSION MAY BE TURNED 90 DEGREES TO THE RUN OF THE RAMP. (1133B.5.5.1.1, 1133B.4.2.4)

20. WHERE THE RAMP SURFACE IS NOT BOUNDED BY A WALL, OR WHERE HANDRAILS &/OR GUARDS ARE ATTACHED TO THE RAMP SURFACE WITH POSTS OR SIMILAR ELEMENTS, PROVIDE "CONTINUOUS AND UNINTERRUPTED BARRIERS" ALONG THE LENGTH OF THE RAMP IN COMPLIANCE WITH ONE OF THE FOLLOWING REQUIREMENTS. (1133B.5.6)

a. A GUIDE CURB A MINIMUM OF 2 INCHES IN HEIGHT ABOVE THE RAMP SURFACE; OR (1133B.5.6.1) B. A WHEEL GUIDE RAIL CENTERED 3 INCHES, PLUS OR MINUS 1 INCH ABOVE THE RAMP SURFACE.(1133B.5.6.2)

21. RAMPS MORE THAN 30 INCHES ABOVE THE ADJACENT GROUND SHALL BE PROVIDED WITH GUARDS THAT COMPLY WITH SECTION 1013. SUCH GUARDS SHALL BE CONTINUOUS FROM THE TOP OF THE RAMP TO THE BOTTOM OF THE RAMP.(1133B.5.7)

D. CURB RAMPS

CURB RAMP IS DEFINED AS "A SLOPING PEDESTRIAN WAY, INTENDED FOR PEDESTRIAN TRAFFIC, WHICH PROVIDES ACCESS BETWEEN A WALK OR SIDEWALK AND A SURFACE LOCATED ABOVE OR BELOW AN ADJACENT CURB FACE AS DIFFERENTIATED FROM A RAMP". (1102B)

1. CURB RAMPS SHALL BE CONSTRUCTED AT EACH CORNER OF STREET INTERSECTIONS WHERE A PEDESTRIAN WAY CROSSES A CURB. THE PREFERRED AND RECOMMENDED LOCATION FOR CURB RAMPS IS IN THE CENTER OF THE CROSSWALK OR EACH STREET CORNER. WHERE IT IS NECESSARY TO LOCATE A CURB RAMP IN THE CENTER OF THE CURB RETURN AND THE STREET SURFACES ARE MARKED TO IDENTIFY PEDESTRIAN CROSSWALKS, THE LOWER END OF THE CURB RAMP SHALL TERMINATE WITHIN SUCH CROSSWALK AREAS. (1127B.5.1, FIG 11B-20C & 11B-22)

2. CURB RAMPS SHALL BE A MINIMUM OF 4 FEET IN WIDTH AND SHALL LIE, GENERALLY, IN A SINGLE SLOPED PLANE, WITH A MINIMUM OF SURFACE WARPING AND CROSS SLOPE. (1127B.5.2)

3. THE SLOPE OF CURB RAMPS SHALL NOT EXCEED ONE UNIT VERTICAL IN 12 UNITS HORIZONTAL (8.33 PERCENT SLOPE). (1127B.5.3)

4. TRANSITIONS FROM RAMPS TO WALKS, GUTTERS, OR STREETS SHALL BE FLUSH AND FREE OF ABRUPT CHANGES. (1127B.5.3)

5. MAXIMUM SLOPES OF ADJOINING GUTTERS, ROAD SURFACE IMMEDIATELY ADJACENT TO THE CURB RAMP OR ACCESSIBLE ROUTE, SHALL NOT EXCEED ONE UNIT VERTICAL IN 20 UNITS HORIZONTAL (5 PERCENT SLOPE) WITHIN 4 FEET OF THE BOTTOM OF THE CURB RAMP. THE SLOPE OF THE FANNED OR FLARED SIDES OF CURB RAMPS SHALL NOT EXCEED ONE UNIT VERTICAL IN 10 UNITS HORIZONTAL (10 PERCENT SLOPE). (1127B.5.3)

6. A LEVEL LANDING 4 FEET DEEP SHALL BE PROVIDED AT THE UPPER END OF EACH CURB RAMP OVER ITS FULL WIDTH TO PERMIT SAFE EGRESS FROM THE RAMP SURFACE, OR THE SLOPE OF THE FANNED OR FLARED SIDES OF THE CURB RAMP SHALL NOT EXCEED ONE UNIT VERTICAL IN 12 UNITS HORIZONTAL (8.33 PERCENT SLOPE). (1127B.5.4)

7. THE SURFACE OF EACH CURB RAMP AND ITS FLARED SIDES SHALL COMPLY WITH SECTION 1124B, GROUND AND FLOOR SURFACES, AND SHALL BE OF CONTRASTING FINISH FROM THAT OF THE ADJACENT SIDEWALK. (1127B.5.5)

8. ALL CURB RAMPS SHALL HAVE A GROOVED BORDER 12 INCHES WIDE AT THE LEVEL SURFACE OF THE SIDEWALK ALONG THE TOP AND EACH SIDE APPROXIMATELY 3/4 INCH ON CENTER. ALL CURB RAMPS CONSTRUCTED BETWEEN THE FACE OF THE CURB AND THE STREET SHALL HAVE A GROOVED BORDER AT THE LEVEL SURFACE OF THE SIDEWALK. (1127B.5.6, FIG. 11B-19A & 19B)

9. CURB RAMPS SHALL HAVE A DETECTABLE WARNING THAT EXTENDS THE FULL WIDTH AND DEPTH OF THE CURB RAMP, EXCLUDING THE FLARED SIDES, INSIDE THE GROOVED BORDER. DETECTABLE WARNINGS SHALL BE SLIP RESISTANT AND CONSIST OF RAISED TRUNCATED DOMES WITH A DIAMETER OF NOMINAL 0.9 INCH AT THE BASE TAPERING TO 0.45 INCH AT THE TOP, A HEIGHT OF NOMINAL 0.2 INCH, AND A CENTER-TO-CENTER SPACING OF NOMINAL 2.35 INCHES, IN COMPLIANCE WITH FIGURE 11B-23A. "NOMINAL" HERE SHALL BE IN ACCORDANCE WITH SECTION 12-11A AND B-102, STATE REFERENCED STANDARDS CODE. THE DETECTABLE WARNING SHALL CONTRAST VISUALLY WITH ADJOINING SURFACES, EITHER LIGHT-ON-DARK OR DARK-ON-LIGHT. THE MATERIAL USED TO PROVIDE CONTRAST SHALL BE AN INTEGRAL PART OF THE WALKING SURFACE. THE DOMES MAY BE CONSTRUCTED IN A VARIETY OF METHODS, INCLUDING CAST-IN-PLACE OR STAMPED, OR MAY BE PART OF A PREFABRICATED SURFACE TREATMENT. ONLY APPROVED DSA-AC DETECTABLE WARNING PRODUCTS AND DIRECTIONAL SURFACES SHALL BE INSTALLED AS PROVIDED IN THE CALIFORNIA CODE OF REGULATIONS (CCR), TITLE 24, PART 1, ARTICLES 2, 3, AND 4. (1127B.5.7)

10. CURB RAMPS SHALL BE LOCATED OR PROTECTED TO PREVENT THEIR OBSTRUCTION BY PARKED VEHICLES. (1127B.5.8)

NO.	DATE	DRAWN	REVISIONS -	CHK'D	APP'D
A	3/20/25	-	30 % CONCEPT DESIGN		
B	4/25/25	-	FINAL CONCEPT DESIGN		
C	7/18/25	-	40 % DESIGN		
D	9/19/25	-	80% DESIGN		

NOT FOR CONSTRUCTION

NO.	DATE	DRAWN	REVISIONS -	CHK'D	APP'D

80% DESIGN

Jacobs
2600 MICHELSON DRIVE, SUITE 500
IRVINE, CA 92612
T: (949) 224-7500
F: (949) 224-7501

LICENSED ARCHITECT
ROBERT G. SMITH
C-34258
02/28/2027
RENEWAL DATE
STATE OF CALIFORNIA

SCALE: AS SHOWN
DRAWN: A. TERMYNA
CHECKED: D. WINSTEAD
DESIGNED: R. SMITH
ENGINEER / ARCHITECT

TERMINAL ISLAND MARITIME SUPPORT FACILITY

ARCHITECTURAL NOTES

THE PORT OF LOS ANGELES
ENGINEERING DIVISION
425 S. PALOS VERDES STREET SAN PEDRO CA 90731-3309

DRAWING NUMBER 1-3513
SHEET NUMBER A-0.1

E. ACCESSIBLE PARKING

1. EACH LOT OR PARKING STRUCTURE WHERE PARKING IS PROVIDED FOR THE PUBLIC AS CLIENTS, GUESTS, OR EMPLOYEES, SHALL PROVIDE ACCESSIBLE PARKING AS REQUIRED BY SECTION 1129B. (1129B.1)

2. PROVIDE DISABLED PARKING SPACES AS REQUIRED BY TABLE 11B-6 FOR PARKING LOT/STRUCTURE. (1129B.1)

1-25	1
25-50	2
51-75	3
76-100	4
101-150	5
151-200	6
201-300	7
301-400	8
401-500	9
501-1000	2% OF TOTAL
1001 AND OVER	20 PLUS ONE FOR EACH 100 OR FRACTION THEREOF OVER 1,001

3. AT FACILITIES PROVIDING MEDICAL CARE AND OTHER SERVICES FOR PERSONS WITH MOBILITY IMPAIRMENTS, PARKING SPACES COMPLYING WITH SECTION 1129B SHALL BE PROVIDED IN ACCORDANCE WITH TABLE 11B-6, EXCEPT AS FOLLOWS: (1129B.2)

a. OUTPATIENT UNITS AND FACILITIES: 10 PERCENT OF THE TOTAL NUMBER OF PARKING SPACES PROVIDED SERVING EACH SUCH OUTPATIENT UNIT OR FACILITY. (1129B.2.1)

b. UNITS AND FACILITIES THAT SPECIALIZE IN TREATMENT OR SERVICES FOR PERSONS WITH MOBILITY IMPAIRMENTS: 20 PERCENT OF THE TOTAL NUMBER OF PARKING SPACES PROVIDED SERVING EACH SUCH UNIT OR FACILITY. (1129B.2.2)

4. ACCESSIBLE PARKING SPACES SERVING A PARTICULAR BUILDING SHALL BE LOCATED ON THE SHORTEST ACCESSIBLE ROUTE OF TRAVEL FROM ADJACENT PARKING TO AN ACCESSIBLE ENTRANCE (AS NEAR AS PRACTICAL TO AN ACCESSIBLE ENTRANCE). (1129B.1)

5. IN PARKING FACILITIES THAT DO NOT SERVE A PARTICULAR BUILDING, ACCESSIBLE PARKING SHALL BE LOCATED ON THE SHORTEST ACCESSIBLE ROUTE OF TRAVEL TO AN ACCESSIBLE PEDESTRIAN ENTRANCE OF THE PARKING FACILITY. (1129B.1)

6. IN BUILDINGS WITH MULTIPLE ACCESSIBLE ENTRANCES WITH ADJACENT PARKING, ACCESSIBLE PARKING SPACES SHALL BE DISPERSED AND LOCATED CLOSEST TO THE ACCESSIBLE ENTRANCES. (1129B.1)

7. WHERE SINGLE ACCESSIBLE PARKING SPACES ARE PROVIDED, THEY SHALL BE 14 FEET WIDE AND LINED TO PROVIDE A 9-FOOT PARKING AREA AND A 5-FOOT LOADING AND UNLOADING ACCESS AISLE ON THE PASSENGER SIDE OF THE VEHICLE. THE WORDS "NO PARKING" SHALL BE PAINTED ON THE GROUND WITHIN EACH 5-FOOT LOADING AND UNLOADING ACCESS AISLE. THIS NOTICE SHALL BE PAINTED IN WHITE LETTERS NOT LESS THAN 12 INCHES HIGH AND LOCATED SO THAT IT IS VISIBLE TO TRAFFIC ENFORCEMENT OFFICIALS. (1129B.3.1, FIG 11B-18B)

8. WHEN MORE THAN ONE ACCESSIBLE PARKING SPACE IS PROVIDED IN LIEU OF PROVIDING A 14-FOOT-WIDE SPACE FOR EACH PARKING SPACE, TWO SPACES CAN BE PROVIDED WITHIN A 23-FOOT-WIDE AREA LINED TO PROVIDE A 9-FOOT PARKING AREA ON EACH SIDE OF A 5-FOOT LOADING AND UNLOADING ACCESS AISLE IN THE CENTER. THE WORDS "NO PARKING" SHALL BE PAINTED ON THE GROUND WITHIN EACH 5-FOOT LOADING AND UNLOADING ACCESS AISLE. THIS NOTICE SHALL BE PAINTED IN WHITE LETTERS NOT LESS THAN 12 INCHES HIGH AND LOCATED SO THAT IT IS VISIBLE TO TRAFFIC ENFORCEMENT OFFICIALS. (1129B.3.1, FIG 11B-18A & 18C)

9. ONE IN EVERY EIGHT ACCESSIBLE SPACES, BUT NOT LESS THAN ONE, SHALL BE SERVED BY AN ACCESS AISLE 96 INCHES WIDE MINIMUM PLACED ON THE SIDE OPPOSITE THE DRIVER'S SIDE WHEN THE VEHICLE IS GOING FORWARD INTO THE PARKING SPACE AND SHALL BE DESIGNATED "VAN ACCESSIBLE". ALL SUCH SPACES MAY BE GROUPED ON ONE LEVEL OF A PARKING STRUCTURE. (1129B.3.2, FIG. 11B-18A, 18B, & 18C)

10. THE MINIMUM LENGTH OF AN ACCESSIBLE PARKING SPACE SHALL BE 18 FEET. (1129B.3.1, FIG 11B-18A, 18B, & 18C)

11. ACCESSIBLE PARKING SPACES SHALL BE LOCATED SO PERSONS WITH DISABILITIES ARE NOT COMPELLED TO WHEEL OR WALK BEHIND PARKING SPACES OTHER THAN THEIR OWN ACCESSIBLE PARKING SPACES. (1129B.3.3)

12. RAMPS SHALL NOT ENCROACH INTO ANY ACCESSIBLE PARKING SPACE OR THE ADJACENT ACCESS AISLE. (1129B.3.3)

13. SURFACE SLOPES OF ACCESSIBLE PARKING SPACES AND ACCESS AISLES SHALL BE THE MINIMUM POSSIBLE AND SHALL NOT EXCEED ONE UNIT VERTICAL IN 50 UNITS HORIZONTAL (2 PERCENT SLOPE) IN ANY DIRECTION. 1129B.3.4)

14. IN EACH PARKING AREA, A BUMPER OR CURB SHALL BE PROVIDED IF REQUIRED TO PREVENT ENCROACHMENT OF CARS OVER THE REQUIRED WIDTH OF WALKWAYS. (1129B.3.3, FIG 11B-18A, 18B, & 18C)

15. PEDESTRIAN WAYS WHICH ARE ACCESSIBLE TO PEOPLE WITH DISABILITIES SHALL BE PROVIDED FROM EACH SUCH PARKING SPACE TO RELATED FACILITIES, INCLUDING CURB CUTS OR RAMPS AS NEEDED. (1129B.3.3, FIG 11B-18A, 18B, & 18C)

16. PROVIDE MINIMUM VERTICAL CLEARANCE OF 8 FEET 2 INCHES AT ACCESSIBLE PARKING SPACES AND ALONG AT LEAST ONE VEHICLE ACCESS ROUTE TO SUCH SPACES FROM SITE ENTRANCES AND EXITS. (1129B.3.5)

17. EACH PARKING SPACE RESERVED FOR PERSONS WITH DISABILITIES SHALL BE IDENTIFIED BY A REFLECTORIZED SIGN PERMANENTLY POSTED IMMEDIATELY ADJACENT TO AND VISIBLE FROM EACH STALL OR SPACE, CONSISTING OF THE INTERNATIONAL SYMBOL OF ACCESSIBILITY IN WHITE ON A DARK BLUE BACKGROUND. THE SIGN SHALL NOT BE SMALLER THAN 70 SQUARE INCHES IN AREA AND, WHEN IN A PATH OF TRAVEL, SHALL BE POSTED AT A MINIMUM HEIGHT OF 80 INCHES FROM THE BOTTOM OF THE SIGN TO THE PARKING SPACE FINISHED GRADE. SIGNS TO IDENTIFY ACCESSIBLE PARKING SPACES MAY BE CENTERED ON A WALL AT THE INTERIOR END OF THE PARKING SPACE. (1129B.4, FIG 11B-18A, 18B, & 18C)

18. AN ADDITIONAL SIGN OR ADDITIONAL LANGUAGE BELOW THE SYMBOL OF ACCESSIBILITY SHALL STATE "MINIMUM FINE $250." (1129B.4)

19. VAN ACCESSIBLE PARKING SPACES SHALL HAVE AN ADDITIONAL SIGN OR ADDITIONAL LANGUAGE STATING "VAN ACCESSIBLE" BELOW THE SYMBOL OF ACCESSIBILITY.(1129B.4)

20. AN ADDITIONAL SIGN SHALL ALSO BE POSTED IN A CONSPICUOUS PLACE AT EACH ENTRANCE TO OFF-STREET PARKING FACILITIES, OR IMMEDIATELY ADJACENT TO AND VISIBLE FROM EACH ACCESSIBLE STALL OR SPACE. THE SIGN SHALL BE NOT LESS THAN 17 INCHES BY 22 INCHES IN SIZE WITH 1 INCH HIGH MINIMUM LETTERING, WHICH CLEARLY AND CONSPICUOUSLY STATES THE FOLLOWING: (1129B.4)

"UNAUTHORIZED VEHICLES PARKED IN DESIGNATED ACCESSIBLE SPACES NOT DISPLAYING DISTINGUISHING PLACARDS OR SPECIAL LICENSE PLATES ISSUED FOR PERSONS WITH DISABILITIES WILL BE TOWED AWAY AT THE OWNER'S EXPENSE. TOWED VEHICLES MAY BE RECLAIMED AT __________________________ OR BY TELEPHONING___________" (BLANK SPACES ARE TO BE FILLED IN WITH APPROPRIATE INFORMATION AS A PERMANENT PART OF THE SIGN.)

21. THE SURFACE OF EACH ACCESSIBLE PARKING SPACE OR STALL SHALL HAVE A SURFACE IDENTIFICATION DUPLICATING EITHER OF THE FOLLOWING SCHEMES: (1129B.4, FIG 11B-18A, 18B, & 18C)

a. BY OUTLINING OR PAINTING THE STALL OR SPACE IN BLUE AND OUTLINING ON THE GROUND IN THE STALL OR SPACE IN WHITE OR SUITABLE CONTRASTING COLOR A PROFILE VIEW DEPICTING A WHEELCHAIR WITH OCCUPANT; OR

b. BY OUTLINING A PROFILE VIEW OF A WHEELCHAIR WITH OCCUPANT IN WHITE ON BLUE BACKGROUND. THE PROFILE VIEW SHALL BE LOCATED SO THAT IT IS VISIBLE TO A TRAFFIC ENFORCEMENT OFFICER WHEN A VEHICLE IS PROPERLY PARKED IN THE SPACE AND SHALL BE 36 INCHES HIGH BY 36 INCHES WIDE.

22. ALL ENTRANCES TO AND VERTICAL CLEARANCES WITHIN PARKING STRUCTURES SHALL COMPLY WITH SECTION 1129B.3, ITEM 5 WHERE REQUIRED FOR ACCESSIBILITY TO ACCESSIBLE PARKING SPACES. (1130B.1)

23. WHEN DIRECT ACCESS IS PROVIDED FOR PEDESTRIANS FROM A PARKING GARAGE TO A BUILDING, EACH DIRECT ENTRANCE FROM THE GARAGE TO THE BUILDING MUST ACCESSIBLE. (1130B.2)

F. PEDESTRIAN GRADE SEPARATIONS

1. PEDESTRIAN RAMPS ON PEDESTRIAN GRADE SEPARATIONS SHALL COMPLY WITH THE REQUIREMENTS OF SECTION 1133B.5 FOR RAMPS. (1128B)

2. CROSS SLOPES OF WALKING SURFACES SHALL BE THE MINIMUM POSSIBLE AND SHALL NOT EXCEED ONE UNIT VERTICAL IN 50 UNITS HORIZONTAL (2 PERCENT SLOPE). THE SLOPE OF ANY APPRECIABLY WARPED WALKING SURFACE SHALL NOT EXCEED 1 UNIT VERTICAL IN 12 UNITS HORIZONTAL (8.33 PERCENT SLOPE) IN ANY DIRECTION. (1128B)

3. WHERE PEDESTRIAN GRADE SEPARATIONS CROSS STREETS OR OTHER VEHICULAR TRAFFIC WAYS, AND WHERE A STREET LEVEL CROSSING CAN REASONABLY AND SAFELY BE USED BY PERSONS WITH DISABILITIES, THERE SHALL BE PROVIDED CONFORMING CURB RAMPS AND A USABLE PATHWAY. (1128B)

G. ENTRANCES AND EXITS

EXIT, IS DEFINED AS "THAT PORTION OF A MEANS OF EGRESS SYSTEM WHICH IS SEPARATED FROM OTHER INTERIOR SPACES OF A BUILDING OR STRUCTURE BY FIRE-RESISTANCE-RATED CONSTRUCTION AND OPENING PROTECTIVES AS REQUIRED TO PROVIDE A PROTECTED PATH OF EGRESS TRAVEL BETWEEN THE EXIT ACCESS AND THE EXIT DISCHARGE. EXITS INCLUDE EXTERIOR EXIT DOORS AT THE LEVEL OF EXIT DISCHARGE, VERTICAL EXIT ENCLOSURES, EXIT PASSAGEWAYS, EXTERIOR EXIT STAIRWAYS, EXTERIOR EXIT RAMPS AND HORIZONTAL EXITS." (1002.1)

PUBLIC WAY, IS DEFINED AS "A STREET, ALLEY OR OTHER PARCEL OF LAND OPEN TO THE OUTSIDE AIR LEADING TO A STREET, THAT HAS BEEN DEEDED, DEDICATED OR OTHERWISE PERMANENTLY APPROPRIATED TO THE PUBLIC FOR PUBLIC USE AND WHICH HAS A CLEAR WIDTH AND HEIGHT OF NOT LESS THAN 10 FEET." (1002.1)

1. ALL ENTRANCES AND EXTERIOR GROUND FLOOR EXIT DOORS TO BUILDINGS AND FACILITIES SHALL BE MADE ACCESSIBLE TO PERSONS WITH DISABILITIES. (1133B.1.1.1.1)

2. REVOLVING DOORS SHALL NOT BE USED AS A REQUIRED ENTRANCE FOR PERSONS WITH DISABILITIES. (1133B.2.3.3)

3. DURING PERIODS OF PARTIAL OR RESTRICTED USE OF A BUILDING OR FACILITY, THE ENTRANCES USED FOR PRIMARY ACCESS SHALL BE ACCESSIBLE TO AND USABLE BY PERSONS WITH DISABILITIES. (1133B.1.1.1.2)

4. RECESSED DOORMATS SHALL BE ADEQUATELY ANCHORED TO PREVENT INTERFERENCE WITH WHEELCHAIR TRAFFIC. (1133B.1.1.1.3, FIG 11B-25)

5. ALL GATES, INCLUDING TICKET GATES, SHALL MEET ALL APPLICABLE ACCESSIBILITY SPECIFICATIONS OF DOORS. (1133B.1.1.1.4)

6. EVERY REQUIRED EXIT DOORWAY SHALL BE CAPABLE OF OPENING AT LEAST 90 DEGREES, SHALL HAVE A MINIMUM CLEAR OPENING OF 32 INCHES, AND SHALL BE OF A SIZE AS TO PERMIT THE INSTALLATION OF A DOOR NOT LESS THAN 3 FEET IN WIDTH AND 6 FEET 8 INCHES IN HEIGHT. (1133B.2.2)

7. THE SPACE BETWEEN TWO CONSECUTIVE DOOR OPENINGS IN A VESTIBULE, SERVING OTHER THAN A REQUIRED EXIT STAIRWAY, SHALL PROVIDE A MINIMUM OF 48 INCHES OF CLEAR SPACE FROM ANY DOOR OPENING INTO SUCH VESTIBULE WHEN THE DOOR IS POSITIONED AT AN ANGLE OF 90 DEGREES FROM ITS CLOSED POSITION. DOORS IN A SERIES SHALL SWING EITHER IN THE SAME DIRECTION OR AWAY FROM THE SPACE BETWEEN THE DOORS. SEE FIGURES 11B-30 & 11B-31. (1133B.2.4.4)

H. CORRIDORS AND AISLES

1. EVERY CORRIDOR AND HALLWAY SERVING AN OCCUPANT LOAD OF 10 OR MORE SHALL NOT BE LESS THAN 44 INCHES IN WIDTH. (1133B.3.1)

2. CORRIDORS AND HALLWAYS SERVING AN OCCUPANT LOAD OF LESS THAN 10 SHALL NOT BE LESS THAN 36 INCHES IN WIDTH. (1133B.3.1)

3. CORRIDORS AND HALLWAYS THAT ARE LOCATED ON AN ACCESSIBLE ROUTE AND EXCEED 200 FEET IN LENGTH SHALL HAVE A MINIMUM CLEAR WIDTH OF 60 INCHES. IF AN ACCESSIBLE ROUTE HAS LESS THAN 60 INCHES CLEAR WIDTH, THEN PASSING SPACES AT LEAST 60 INCHES BY 60 INCHES SHALL BE LOCATED AT INTERVALS OF 200 FEET MAXIMUM. A "T" INTERSECTION OF TWO CORRIDORS OR WALKS IS AN ACCEPTABLE PASSING PLACE. (1133B.3.2, FIG 11B-34)

4. CIRCULATION AISLES AND PEDESTRIAN WAYS SHALL BE SIZED ACCORDING TO FUNCTIONAL REQUIREMENTS AND IN NO CASE SHALL BE LESS THAN 36 INCHES IN CLEAR WIDTH. (1105B.3.6)

5. EVERY PORTION OF EVERY BUILDING IN WHICH ARE INSTALLED SEATS, TABLES, MERCHANDISE, EQUIPMENT, OR SIMILAR MATERIALS SHALL BE PROVIDED WITH AISLES LEADING TO AN EXIT. (1133B.6.1)

6. EVERY AISLE SHALL BE NOT LESS THAN 36 INCHES WIDE IF SERVING ONLY ONE SIDE, AND NOT LESS THAN 44 INCHES WIDE IF SERVING BOTH SIDES. (1133B.6.2)

7. AISLES SHALL COMPLY WITH FIGURE 11B-5E(A) AND (B) FOR CIRCULATION AROUND OBSTRUCTIONS. (1133B.6.2)

I. PASSENGER DROP-OFF & LOADING ZONES

1. WHEN PROVIDED, PASSENGER DROP-OFF AND LOADING ZONES SHALL BE LOCATED ON AN ACCESSIBLE ROUTE OF TRAVEL. (1131B.1)

2. WHERE PROVIDED, ONE PASSENGER DROP-OFF AND LOADING ZONE SHALL PROVIDE AN ACCESS AISLE AT LEAST 60 INCHES WIDE AND 20 FEET LONG ADJACENT AND PARALLEL TO THE VEHICLE PULL-UP SPACE. VEHICLE STANDING SPACES AND ACCESS AISLES SHALL BE LEVEL WITH SURFACE SLOPES NOT EXCEEDING ONE UNIT VERTICAL IN 50 UNITS HORIZONTAL (2 PERCENT SLOPE) IN ALL DIRECTIONS. IF THERE ARE CURBS BETWEEN THE ACCESS AISLE AND THE VEHICLE PULL-UP SPACE, THEN A CURB RAMP SHALL BE PROVIDED. . (1131B.2.1, FIG 11B-24)

3. PROVIDE MINIMUM VERTICAL CLEARANCE OF 114 INCHES AT ACCESSIBLE PASSENGER LOADING ZONES AND ALONG AT LEAST ONE VEHICLE ACCESS ROUTE TO SUCH AREAS FROM SITE ENTRANCES AND EXITS. (1131B.2.2)

4. VALET PARKING FACILITIES SHALL PROVIDE A PASSENGER LOADING ZONE COMPLYING WITH SECTION 1131B.2 AND SHALL BE LOCATED ON AN ACCESSIBLE ROUTE OF TRAVEL TO THE ENTRANCE OF THE FACILITY. THE PARKING SPACE REQUIREMENTS OF SECTION 1129B THROUGH 1130B APPLY TO FACILITIES WITH VALET PARKING. (1131B.3)

5. WHERE PROVIDED, BUS STOP PADS SHALL HAVE A FIRM, STABLE SURFACE WITH A MINIMUM CLEAR LENGTH OF 96 INCHES (MEASURED FROM THE CURB OR ROADWAY EDGE) AND A MINIMUM CLEAR WIDTH OF 60 INCHES (MEASURED PARALLEL TO THE VEHICLE ROADWAY) TO THE MAXIMUM EXTENT ALLOWED BY LEGAL OR SITE CONSTRAINTS. BUS STOP PADS SHALL CONNECT TO STREETS, SIDEWALKS OR PEDESTRIAN PATHS AS PART OF AN ACCESSIBLE ROUTE. NEWLY CONSTRUCTED BUS STOP PADS MUST PROVIDE A SQUARE CURB SURFACE BETWEEN THE PAD AND THE ROAD OR OTHER DETECTABLE WARNING APPROVED BY DEPARTMENT OF STATE ARCHITECT IN ACCORDANCE WITH SECTION 1133B.8.5. BUS STOP PADS SHALL BE AT THE SAME SLOPE AS THE ROADWAY IN THE DIRECTION PARALLEL TO ROADWAY AND A MAXIMUM ONE UNIT VERTICAL IN 50 UNITS HORIZONTAL (2 PERCENT SLOPE) PERPENDICULAR TO ROADWAY. (1121B.2.1)

6. WHERE PROVIDED, BUS STOP SHELTERS SHALL BE INSTALLED SO AS TO PERMIT A WHEELCHAIR USER TO ENTER THE SHELTER FROM THE PUBLIC WAY AND ACCESS A CLEAR FLOOR AREA OF 30 INCHES BY 48 INCHES, COMPLETELY WITHIN THE SHELTER. SUCH SHELTERS SHALL BE CONNECTED BY AN ACCESSIBLE ROUTE TO THE BOARDING AREA. (1121B.2.1)

NO.	DATE	DRAWN	REVISIONS -	CHK'D	APP'D
A	3/20/25	-	30 % CONCEPT DESIGN		
B	4/25/25	-	FINAL CONCEPT DESIGN		
C	7/18/25	-	40 % DESIGN		
D	9/19/25	-	80% DESIGN		

NOT FOR CONSTRUCTION

NO.	DATE	DRAWN	REVISIONS -	CHK'D	APP'D

80% DESIGN

Jacobs
2600 MICHELSON DRIVE, SUITE 500
IRVINE, CA 92612
T: (949) 224-7500
F: (949) 224-7501

LICENSED ARCHITECT ROBERT G SMITH C-34258 02/28/2027 RENEWAL DATE STATE OF CALIFORNIA

SCALE: AS SHOWN
DRAWN: A. TERMYNA
CHECKED: D. WINSTEAD
DESIGNED: R. SMITH
ENGINEER / ARCHITECT

TERMINAL ISLAND MARITIME SUPPORT FACILITY

ARCHITECTURAL NOTES

THE PORT OF LOS ANGELES
ENGINEERING DIVISION
425 S. PALOS VERDES STREET SAN PEDRO CA 90731-3309

DRAWING NUMBER 1-3513
SHEET NUMBER A-0.2

RVT: Autodesk Docs://US CA_D3371901_POLA TIMSF/1-3513-JEG-12-A_WashRoom_R25.rvt
DATE: 9/15/2025 2:14:19 PM

J. DOORS

1. DOOR HANDLES, PULLS, LATCHES, LOCKS, AND OTHER OPERATING DEVICES ON DOORS REQUIRED TO BE ACCESSIBLE SHALL NOT REQUIRE TIGHT GRASPING, TIGHT PINCHING OR TWISTING OF THE WRIST TO OPERATE. MANUALLY OPERATED BOLTS OR SURFACE BOLTS ARE NOT PERMITTED. THE UNLATCHING OF ANY DOOR OR LEAF SHALL NOT REQUIRE MORE THAN ONE OPERATION. (1008.1.9.1, 1008.1.9.4, 1008.1.9.5)

2. LATCHING AND LOCKING DOORS THAT ARE HAND ACTIVATED AND WHICH ARE IN A PATH OF TRAVEL SHALL BE OPERABLE BY LEVERTYPE HARDWARE, PANIC BARS, PUSH-PULL ACTIVATING BARS, U-SHAPED HANDLES, OR OTHER HARDWARE DESIGNED TO PROVIDE PASSAGE WITHOUT REQUIRING THE ABILITY TO GRASP THE OPENING HARDWARE. (1133B.2.5.2)

3. HAND-ACTIVATED DOOR OPENING HARDWARE SHALL BE CENTERED BETWEEN 30 INCHES AND 44 INCHES ABOVE THE FLOOR. (1133B.2.5.2)

4. WHEN INSTALLED, DOORWAYS SHALL HAVE A MINIMUM CLEAR OPENING OF 32 INCHES WITH THE DOOR OPEN 90 DEGREES. (1133B.1.1.1.1, FIG 11B-5B & 11B-33)

5. FOR HINGED DOORS, THE OPENING WIDTH SHALL BE MEASURED WITH THE DOOR POSITIONED AT AN ANGLE OF 90 DEGREES FROM ITS CLOSED POSITION. (1133B.2.3, FIG 11B-5B)

6. WHERE A PAIR OF DOORS IS UTILIZED, AT LEAST ONE OF THE DOORS SHALL PROVIDE A CLEAR, UNOBSTRUCTED OPENING WIDTH OF 32 INCHES WITH THE LEAF POSITIONED AT AN ANGLE OF 90 DEGREES FROM ITS CLOSED POSITION. (1133B.2.3.1)

7. WHEN AN AUTOMATIC OR POWER ASSISTED DOOR OPERATOR IS UTILIZED TO OPERATE A PAIR OF DOORS, AT LEAST ONE OF THE DOORS SHALL PROVIDE A CLEAR, UNOBSTRUCTED OPENING WIDTH OF 32 INCHES WITH THE DOOR POSITIONED AT AN ANGLE OF 90 DEGREES FROM ITS CLOSED POSITION. AUTOMATIC DOORS SHALL COMPLY WITH BHMA A156.10 OR BHMA A156.19. (1133B.2.3.2)

8. MINIMUM MANEUVERING CLEARANCES AT DOORS SHALL BE AS SHOWN IN FIGURE 11B-26A, 11B-26B, & 11B-26C. THE FLOOR OR GROUND AREA WITHIN THE REQUIRED CLEARANCES SHALL BE LEVEL AND CLEAR. (1133B.2.4.2)

9. THERE SHALL BE A LEVEL AND CLEAR FLOOR OR LANDING ON EACH SIDE OF A DOOR. THE LEVEL AREA SHALL HAVE A LENGTH IN THE DIRECTION OF DOOR SWING OF AT LEAST 60 INCHES AND THE LENGTH OPPOSITE THE DIRECTION OF DOOR SWING OF 48 INCHES AS MEASURED AT RIGHT ANGLES TO THE PLANE OF THE DOOR IN THE CLOSED POSITION. (1133B.2.4.2, & FIG 11B-25)

10. THE WIDTH OF THE LEVEL AREA ON THE SIDE TO WHICH THE DOOR SWINGS SHALL EXTEND 24 INCHES PAST THE STRIKE EDGE OF THE DOOR FOR EXTERIOR DOORS AND 18 INCHES PAST THE STRIKE EDGE FOR INTERIOR DOORS. WHERE THE PLANE OF THE DOORWAY IS OFFSET OR LOCATED IN AN ALCOVE A DISTANCE MORE THAN 8 INCHES MEASURED FROM THE PLANE OF THE DOORWAY TO THE FACE OF THE WALL, THE DOOR SHALL BE PROVIDED WITH 60 INCHES MANEUVERING CLEARANCE FOR FRONT APPROACH. (1133B.2.4.3, 1133B.2.4.5, 1133B.2.5.3, FIG 11B-33(A)) 101. PROVIDE CLEAR SPACE OF 12 INCHES PAST STRIKE EDGE OF THE DOOR ON THE OPPOSITE SIDE TO WHICH THE DOOR SWINGS IF THE DOOR IS EQUIPPED WITH BOTH A LATCH AND A CLOSER. (FIG 11B-26(A))

11. THE FLOOR OR LANDING SHALL BE NOT MORE THAN ½ INCH LOWER THAN THE THRESHOLD OF THE DOORWAY. (1133B.2.4.1)

12. THE BOTTOM 10 INCHES OF ALL DOORS EXCEPT AUTOMATIC AND SLIDING SHALL HAVE A SMOOTH, UNINTERRUPTED SURFACE TO ALLOW THE DOOR TO BE OPENED BY A WHEELCHAIR FOOTREST WITHOUT CREATING A TRAP OR HAZARDOUS CONDITION. WHERE NARROW FRAME DOORS ARE USED, A 10 INCH HIGH SMOOTH PANEL SHALL BE INSTALLED ON THE PUSH SIDE OF THE DOOR, WHICH WILL ALLOW THE DOOR TO BE OPENED BY A WHEELCHAIR FOOTREST WITHOUT CREATING A TRAP OR HAZARDOUS CONDITION. (1133B.2.6, FIG 11B-29)

13. THE MAXIMUM FORCE REQUIRED TO PUSH OR PULL OPEN A DOOR SHALL COMPLY WITH THE FOLLOWING. PUSH OR PULL FORCE FOR A HINGED DOOR SHALL BE MEASURED PERPENDICULAR TO THE DOOR FACE AT THE DOOR OPENING HARDWARE OR 30 INCHES FROM THE HINGED SIDE, WHICHEVER IS FARTHER FROM THE HINGE. PUSH OR PULL FORCE FOR A SLIDING OR FOLDING DOOR SHALL BE MEASURED PARALLEL TO THE DOOR AT THE DOOR PULL OR LATCH. COMPENSATING DEVISES OR AUTOMATIC DOOR OPERATORS COMPLYING WITH SECTION 1133B.2.3.2 MAY BE USED TO MEET THE MAXIMUM FORCE LIMITS. (1133B.2.5)

A. REQUIRED FIRE DOORS SHALL HAVE THE MINIMUM OPENING FORCE ALLOWABLE BY THE APPROPRIATE ADMINISTRATIVE AUTHORITY, NOT TO EXCEED 15 LBF.

B. OTHER THAN REQUIRED FIRE DOORS, INTERIOR DOORS SHALL HAVE A MAXIMUM OPENING FORCE OF 5 LBF.

C. OTHER THAN REQUIRED FIRE DOORS, EXTERIOR DOORS SHALL HAVE A MAXIMUM OPENING FORCE OF 5 LBF.

14. WHEN THE DOOR HAS A CLOSER, THEN THE SWEEP PERIOD OF THE CLOSER SHALL BE ADJUSTED SO THAT FROM AN OPEN POSITION OF 70 DEGREES, THE DOOR WILL TAKE AT LEAST 3 SECONDS TO MOVE TO A POINT 3 INCHES FROM THE LATCH, MEASURED TO THE LEADING EDGE OF THE DOOR. (1133B.2.5.1)
15. WHERE TURNSTILES AND CROWD CONTROL BARRIERS ARE UTILIZED IN A FACILITY FOR THE PURPOSE OF PROVIDING FULLY CONTROLLED ACCESS, SUCH AS WHERE AN ADMISSION PRICE IS CHARGED. A DOOR OR GATE THAT IS ACCESSIBLE TO PERSONS WITH DISABILITIES SHALL BE PROVIDED ADJACENT TO EACH TURNSTILE EXIT OR ENTRANCE. THIS ALTERNATE PASSAGEWAY SHALL BE MAINTAINED IN AN UNLOCKED CONDITION DURING BUSINESS HOURS AND THE DOOR OR GATE SHALL NOT ACTIVATE A PUBLICLY AUDIBLE ALARM SYSTEM. THE DOOR OR GATE MAY BE LATCHED WHERE ALL GATES ARE RESTRICTED AND CONTROLLED BY AN ATTENDANT AND A SIGN IS POSTED STATING, "ALL GATES ARE RESTRICTED AND CONTROLLED BY AN ATTENDANT." THE ACCESSIBLE DOOR OR GATE SHALL PROVIDE THE SAME USE PATTERN. WHERE POSTS, RAILS, OR OTHER PEDESTRIAN CONTROLS ARE UTILIZED TO CREATE CROWD CONTROL AISLES OR LANES. A MINIMUM AISLE WIDTH NOT LESS THAN INDICATED IN FIGURE IIB-5E (a) AND (b) WITH 32 INCHES OF CLEAR OPENING. (1133B.2.3.4)

1K. FLOORS AND LEVELS

FLOORS AND LEVELS LEVEL AREA IS DEFINED AS "A SPECIFIED SURFACE THAT DOES NOT HAVE A SLOPE IN ANY DIRECTION EXCEEDING ONE UNIT VERTICAL IN 50 UNITS HORIZONTAL (2 PERCENT SLOPE)." (1102B)

1. IN BUILDINGS AND FACILITIES, FLOORS OF A GIVEN STORY SHALL BE A COMMON LEVEL THROUGHOUT, OR SHALL BE CONNECTED BY PEDESTRIAN RAMPS OR PASSENGER ELEVATORS. (1120B.1)

2. GROUND AND FLOOR SURFACES ALONG ACCESSIBLE ROUTES AND IN ACCESSIBLE ROOMS AND SPACES, INCLUDING FLOORS, WALKS, RAMPS, STAIRS, AND CURB RAMPS, SHALL BE STABLE, FIRM, AND SLIP-RESISTANT. (1120B.2 & 1124B.1)

3. CHANGES IN LEVEL UP TO ¼ INCH MAY BE VERTICAL AND WITHOUT EDGE TREATMENT. (1124B.2, FIG 11B-5E(C))

4. CHANGES IN LEVEL BETWEEN ¼ INCH AND ½ INCH SHALL BE BEVELED WITH A SLOPE NO GREATER THAN ONE UNIT VERTICAL IN 2 UNITS HORIZONTAL (50 PERCENT SLOPE). (1124B.2, FIG 11B-5E(D))

5. CHANGES IN LEVEL GREATER THAN ½ INCH SHALL BE ACCOMPLISHED BY MEANS OF A CURB RAMP, RAMP, OR ELEVATOR. (1124B.2)

6. IF CARPET OR CARPET TILE IS USED ON A GROUND OR FLOOR SURFACE, THEN IT SHALL BE SECURELY ATTACHED; HAVE A FIRM CUSHION, PAD OR BACKING OR NO CUSHION OR PAD; AND HAVE A LEVEL LOOP, TEXTURED LOOP, LEVEL CUT PILE, OR LEVEL CUT/UNCUT PILE TEXTURE. THE MAXIMUM PILE HEIGHT SHALL BE ½ INCH. EXPOSED EDGES OF CARPET SHALL BE FASTENED TO FLOOR SURFACES AND HAVE TRIM ALONG THE ENTIRE LENGTH OF THE EXPOSED EDGE. CARPET EDGE TRIM SHALL COMPLY WITH SECTION 1124B.2. (1124B.3, FIG 11B-7E)

7. IF GRATINGS ARE LOCATED ON FLOORS, THEN THEY SHALL HAVE SPACES NO GREATER THAN ½ INCH WIDE IN ONE DIRECTION. IF GRATINGS HAVE ELONGATED OPENINGS, THEN THEY SHALL BE PLACED SO THAT THE LONG DIMENSION IS PERPENDICULAR TO THE DOMINANT DIRECTION OF TRAVEL. (1124B.4, FIG 11B-7E)

L. HAZARDS AND PROTRUDING OBJECTS

1. ABRUPT CHANGES IN LEVEL, EXCEPT BETWEEN A WALK OR SIDEWALK AND AN ADJACENT STREET OR DRIVEWAY, EXCEEDING 4 INCHES IN A VERTICAL DIMENSION, SUCH AS AT PLANTERS OR FOUNTAINS LOCATED IN OR ADJACENT TO WALKS, SIDEWALKS, OR OTHER PEDESTRIAN WAYS, SHALL BE IDENTIFIED BY WARNING CURBS PROJECTING AT LEAST 6 INCHES IN HEIGHT ABOVE THE WALK OR SIDEWALK SURFACE TO WARN THE BLIND OF A POTENTIAL DROP OFF. (1133B.8.1)

2. WHEN A GUARD OR HANDRAIL IS PROVIDED, NO CURB IS REQUIRED WHEN A GUIDE RAIL IS PROVIDED CENTERED 3 INCHES PLUS OR MINUS 1 INCH ABOVE THE SURFACE OF THE WALK OR SIDEWALK, THE WALK IS 5 PERCENT OR LESS GRADIENT OR NO ADJACENT HAZARD EXISTS. (1133B.8.1, FIG 11B-27(C)

3. OBJECTS PROJECTING FROM WALLS WITH THEIR LEADING EDGES BETWEEN 27 INCHES AND 80 INCHES ABOVE THE FINISHED FLOOR SHALL PROTRUDE NO MORE THAN 4 INCHES INTO WALKS, HALLS, CORRIDORS, PASSAGEWAYS, OR AISLES. (1133B.8.6.1, FIG 11B-7A)

4. OBJECTS MOUNTED WITH THEIR LEADING EDGES AT OR BELOW 27 INCHES ABOVE THE FINISHED FLOOR MAY PROTRUDE ANY AMOUNT INTO WALKS, HALLS, CORRIDORS, PASSAGEWAYS, OR AISLES. (1133B.8.6.1, FIG 11B-7A)

5. FREESTANDING OBJECTS MOUNTED ON POSTS OR PYLONS MAY OVERHANG 12INCHES MAXIMUM FROM 27 INCHES TO 80 INCHES ABOVE THE GROUND OR FINISHED FLOOR. (1133B.8.6.1, FIG 11B-7B)

6. PROTRUDING OBJECTS SHALL NOT REDUCE THE CLEAR WIDTH OF AN ACCESSIBLE ROUTE OR MANEUVERING SPACE. (1133B.8.6.1, FIG 11B-7D)

7. WALKS, HALLS, CORRIDORS, PASSAGEWAYS, AISLES, OR OTHER CIRCULATION SPACES SHALL HAVE 80 INCHES MINIMUM CLEAR HEADROOM. (1133B.8.6.2, FIG 11B-7A & 7C)

8. ANY OBSTRUCTION THAT OVERHANGS A PEDESTRIAN WAY SHALL BE A MINIMUM OF 80 INCHES ABOVE THE WALKING SURFACE AS MEASURED FROM THE BOTTOM OF THE OBSTRUCTION. (1133B.8.2, FIG 11B-28)

9. WHERE A GUY SUPPORT IS USED PARALLEL TO A PATH OF TRAVEL, INCLUDING, BUT NOT LIMITED TO SIDEWALKS, A GUY BRACE, SIDEWALK GUY OR SIMILAR DEVICE SHALL BE USED TO PREVENT AN OVERHANGING OBSTRUCTION AS DEFINED. (1133B.8.2)

10. IF A WALK CROSSES OR ADJOINS A VEHICULAR WAY, AND THE WALKING SURFACES ARE NOT SEPARATED BY CURBS, RAILINGS, OR OTHER ELEMENTS BETWEEN THE PEDESTRIAN AREAS AND VEHICULAR AREAS, THE BOUNDARY BETWEEN THE AREAS SHALL BE DEFINED BY A CONTINUOUS DETECTABLE WARNING WHICH IS 36 INCHES WIDE, COMPLYING WITH SECTION 1121B.3.1, ITEM 8(A). ONLY APPROVED DSA/AC DETECTABLE WARNING PRODUCTS AND DIRECTIONAL SURFACES SHALL BE INSTALLED AS PROVIDED IN THE CALIFORNIA CODE OF REGULATIONS, TITLE 24, PART 1, ARTICLES 2, 3, AND 4. (1133B.8.5)

11. TRANSIT BOARDING PLATFORMS SHALL CONFORM TO THE REQUIREMENTS OF SECTION 1121B.3.1, ITEMS 8(A) & 8(B). (1133B.8.3, 1133B.8.4)

M. STAIRWAYS

1. STAIRWAYS SHALL HAVE HANDRAILS ON EACH SIDE. HANDRAILS SHALL BE CONTINUOUS ALONG BOTH SIDES OF THE STAIRWAY. INTERMEDIATE HANDRAILS SHALL BE PROVIDED AS REQUIRED IN SECTION 1012.8. (1133B.4.1.1)

2. THE TOP OF HANDRAIL GRIPPING SURFACE SHALL BE MOUNTED 34 TO 38 INCHES ABOVE THE NOSING OF THE TREADS. (1133B.4.2.1, FIG 11B-35)

3. HANDRAILS SHALL EXTEND A MINIMUM OF 12 INCHES BEYOND THE TOP NOSING AND 12 INCHES PLUS THE TREAD WIDTH BEYOND THE BOTTOM NOSING AND ENDS SHALL BE RETURNED OR TERMINATE IN NEWEL POSTS OR SAFETY TERMINALS. (1133B.4.2.2, 1133B4.2.3, FIG 11B-35 & 37)
4. THE HANDGRIP PORTION OF HANDRAILS SHALL BE NOT LESS THAN 1-1/4 INCHES OR MORE THAN 1-1/2 INCHES IN CROSS-SECTIONAL NOMINAL DIMENSION OR THE SHAPE SHALL PROVIDE AN EQUIVALENT GRIPPING SURFACE. THE HANDGRIP PORTION OF HANDRAILS SHALL HAVE A SMOOTH SURFACE WITH NO SHARP CORNERS. GRIPPING SURFACES (TOP OR SIDES) SHALL BE UNINTERRUPTED BY NEWEL POSTS, OTHER CONSTRUCTION ELEMENTS, OR OBSTRUCTIONS. ANY WALL OR OTHER SURFACE ADJACENT TO THE HANDRAIL SHALL BE FREE OF SHARP OR ABRASIVE ELEMENTS. EDGES SHALL HAVE A MINIMUM RADIUS OF 1/8 INCH. (1133B.4.2.6, FIG 11B-36)

5. THE ORIENTATION OF AT LEAST ONE HANDRAIL SHALL BE IN THE DIRECTION OF THE RUN OF THE STAIR AND PERPENDICULAR TO THE DIRECTION OF THE STAIR NOSING, AND SHALL NOT REDUCE THE MINIMUM REQUIRED WIDTH OF STAIRS. (1133B.4.2.4)

6. HANDRAILS PROJECTING FROM A WALL SHALL HAVE A SPACE OF 1-1/2 INCHES BETWEEN THE WALL AND THE HANDRAIL. HANDRAILS MAY BE LOCATED IN A RECESS IF THE RECESS IS A MAXIMUM OF 3 INCH DEEP AND EXTENDS AT LEAST 18 INCHES ABOVE THE TOP OF THE RAIL. HANDRAILS SHALL NOT ROTATE IN THEIR FITTINGS. (1133B.4.2.5, FIG 11B-36)

7. INTERIOR STAIRS SHALL HAVE THE UPPER APPROACH AND LOWER TREAD MARKED BY A STRIPE PROVIDING CLEAR VISUAL CONTRAST. EXTERIOR STAIRS SHALL HAVE THE UPPER APPROACH AND ALL TREADS MARKED BY A STRIPE PROVIDING CLEAR VISUAL CONTRAST. THE STRIPE SHALL BE A MINIMUM OF 2 INCHES WIDE TO A MAXIMUM OF 4 INCHES WIDE PLACED PARALLEL TO, AND NOT MORE THAN 1 INCH FROM, THE NOSE OF THE STEP OR UPPER APPROACH. THE STRIPE SHALL EXTEND THE FULL WIDTH OF THE STEP OR UPPER APPROACH AND SHALL BE OF MATERIAL THAT IS AT LEAST AS SLIP RESISTANT AS THE OTHER TREADS OF THE STAIR. A PAINTED STRIPE SHALL BE ACCEPTABLE. . (1133B.4.4, FIG 11B-35)

8. STAIR TREADS SHALL BE NO LESS THAN 11 INCHES DEEP, MEASURED FROM RISER TO RISER. STAIR RISER HEIGHTS SHALL BE 7 INCHES MAXIMUM AND 4 INCHES MINIMUM. ON ANY GIVEN FLIGHT OF STAIRS, ALL STEPS SHALL HAVE UNIFORM RISER HEIGHT AND UNIFORM TREAD WIDTHS. (1133B.4.5)

9. ALL TREAD SURFACES SHALL BE SLIP-RESISTANT. WEATHER EXPOSED STAIRS AND THEIR APPROACHES SHALL BE DESIGNED SO THAT WATER WILL NOT ACCUMULATE ON THE WALKING SURFACES. TREADS SHALL HAVE SMOOTH, ROUNDED, OR BEVELED EXPOSED EDGES. (1133B.4.5.1, FIG 11B-35)

10. RISERS SHALL BE SOLID AND SHALL BE VERTICAL OR SLOPED FROM THE UNDERSIDE OF THE LEADING EDGE OF THE TREAD ABOVE AT AN ANGLE NOT MORE THAN 30 DEGREES FROM THE VERTICAL. OPEN RISERS ARE NOT PERMITTED. . (1133B.4.5.2, FIG 11B-35(A) AND (B))

11. THE RADIUS OF CURVATURE AT THE LEADING EDGE (NOSING) OF THE TREAD SHALL BE NO GREATER THAN ½ INCH. BEVELING OF NOSINGS SHALL NOT EXCEED ½ INCH. NOSINGS SHALL NOT PROJECT MORE THAN 1-1/4 INCHES PAST THE FACE OF THE RISER BELOW. NOSINGS THAT PROJECT BEYOND RISERS SHALL HAVE THE UNDERSIDE OF THE LEADING EDGE BEVELED AT AN ANGLE NOT MORE THAN 30 DEGREES FROM THE VERTICAL. THE TRANSITION FROM THE NOSING TO THE RISER SHALL BE FREE OF ABRUPT EDGES. ALL PROJECTIONS SHALL BE OF UNIFORM SIZE, INCLUDING NOSINGS AT LANDINGS. (1133B.4.5.3, FIG 11B-35(C))

12. TACTILE FLOOR IDENTIFICATION SIGNS THAT COMPLY WITH SECTION 1117B.5.1 SHALL BE LOCATED AT EACH FLOOR LEVEL LANDING IN ALL ENCLOSED STAIRWAYS IN BUILDINGS TWO OR MORE STORIES IN HEIGHT TO IDENTIFY THE FLOOR LEVEL. AT EXIT DISCHARGE LEVEL, THE SIGN SHALL INCLUDE A RAISED FIVE-POINTED STAR LOCATED TO THE LEFT OF THE IDENTIFYING FLOOR LEVEL. THE OUTSIDE DIAMETER OF THE STAR SHALL BE THE SAME AS THE HEIGHT OF THE RAISED CHARACTERS. (1133B.4.3)

N. CONTROLS & OPERATING MECHANISMS & ELECTRICAL

1. CONTROLS AND OPERATING MECHANISMS IN ACCESSIBLE SPACES, ALONG ACCESSIBLE ROUTES OR AS PART OF ACCESSIBLE ELEMENTS AND THOSE IN SECTION 1.9.1 ARE REQUIRED TO BE ACCESSIBLE. (1117B.6.1)

2. CLEAR FLOOR SPACE COMPLYING WITH SECTION 1118B.4 THAT ALLOWS A FORWARD OR PARALLEL APPROACH BY A PERSON USING A WHEELCHAIR SHALL BE PROVIDED AT CONTROLS, DISPENSERS, RECEPTACLES, AND OTHER OPERABLE EQUIPMENT. (1117B.6.2)

3. THE HIGHEST AND LOWEST OPERABLE PART OF ALL CONTROLS, DISPENSERS, RECEPTACLES, AND OTHER OPERABLE EQUIPMENT SHALL BE PLACED WITHIN ONE OF THE REACH RANGES SPECIFIED IN SECTIONS 1118B.5 AND 1118B.6. . (1117B.6.3)

4. CONTROLS AND OPERATING MECHANISMS SHALL BE OPERABLE WITH ONE HAND AND SHALL NOT REQUIRE TIGHT GRASPING, PUNCHING, OR TWISTING OF THE WRIST. THE FORCE REQUIRED TO ACTIVATE CONTROLS SHALL BE NO GREATER THAN 5 POUNDS OF FORCE. (1117B.6.4)

5. FOR ACCESSIBLE LAVATORIES, FAUCET CONTROLS AND OPERATING MECHANISMS SHALL BE OPERABLE WITH ONE HAND AND SHALL NOT REQUIRE GRASPING, PINCHING, OR TWISTING OF THE WRIST. THE FORCE REQUIRED TO ACTIVE FAUCET CONTROLS AND OPERATING MECHANISMS SHALL BE NO GREATER THAN 5 LBF. LEVER-OPERATED, PUSH-TYPE, AND ELECTRONICALLY CONTROLLED MECHANISMS ARE EXAMPLES OF ACCEPTABLE DESIGNS. SELF-CLOSING VALVES ARE ALLOWED IF THE FAUCET REMAINS OPEN FOR AT LEAST 10 SECONDS. (1115B.4.3)

O. SPACE ALLOWANCE AND REACH RANGES

1. THE MINIMUM CLEAR FLOOR OR GROUND SPACE REQUIRED TO ACCOMMODATE A SINGLE, STATIONARY WHEELCHAIR AND OCCUPANT IS 30 INCHES BY 48 INCHES. THE MINIMUM CLEAR FLOOR OR GROUND SPACE FOR WHEELCHAIRS MAY BE POSITIONED FOR FORWARD OR PARALLEL APPROACH TO AN OBJECT. CLEAR FLOOR OR GROUND SPACE FOR WHEELCHAIRS MAY BE A PART OF THE KNEE SPACE REQUIRED UNDER SOME OBJECTS. (1117B.2.3, 1118B.4.1, FIG 11-B-5A)

2. ONE FULL-UNOBSTRUCTED SIDE OF THE CLEAR FLOOR OR GROUND SPACE FOR A WHEELCHAIR SHALL ADJOIN OR OVERLAP AN ACCESSIBLE ROUTE OR ADJOIN ANOTHER WHEELCHAIR CLEAR FLOOR SPACE. IF A CLEAR FLOOR OR GROUND SPACE IS LOCATED IN AN ALCOVE OR OTHERWISE CONFINED ON ALL OR PART OF THREE SIDES, ADDITIONAL MANEUVERING CLEARANCES SHALL BE PROVIDED. (1117B.2.4, 1118B.4.2, FIG 11-B-5A)

3. THE SPACE REQUIRED FOR A WHEELCHAIR TO MAKE AN 180-DEGREE TURN IS A CLEAR SPACE OF 60 INCHES DIAMETER OR A T-SHAPED SPACE. (1118B.3, FIG 11B-12(A) & (B))

4. THE MINIMUM CLEAR WIDTH REQUIRED FOR A WHEELCHAIR TO TURN AROUND AN OBSTRUCTION SHALL BE 36 INCHES MINIMUM WHERE THE OBSTRUCTION IS 48 INCHES OR MORE IN LENGTH; 42 INCHES MINIMUM WHERE THE OBSTRUCTION IS LESS THAN 48 INCHES IN LENGTH. (FIG 11B-5E)

5. THE MINIMUM CLEAR WIDTH FOR SINGLE WHEELCHAIR PASSAGE SHALL BE 32 INCHES AT A POINT AND 36 INCHES CONTINUOUSLY. (1118B.1, FIG 11B-10)

6. THE MINIMUM WIDTH FOR TWO WHEELCHAIRS TO PASS IS 60 INCHES. (1118B.2, FIG 11B-11)

7. IF THE CLEAR FLOOR SPACE ONLY ALLOWS FORWARD APPROACH TO AN OBJECT, THE MAXIMUM HIGH FORWARD REACH ALLOWED SHALL BE 48 INCHES. SEE FIGURE 11B-5C(A). THE MINIMUM LOW FORWARD REACH IS 15 INCHES. IF THE HIGH FORWARD REACH IS OVER AN OBSTRUCTION, REACH AND CLEARANCES SHALL BE AS SHOWN IN FIGURE 11B-5C(B). (1118B.5)

8. IF THE CLEAR FLOOR SPACE ALLOWS PARALLEL APPROACH BY A PERSON IN A WHEELCHAIR, THE MAXIMUM HIGH SIDE REACH ALLOWED SHALL BE 54 INCHES AND THE LOW SIDE REACH SHALL BE NO LESS THAN 9 INCHES ABOVE THE FLOOR AS SHOWN IN FIGURES 11B-5D(A) & (B). IF THE SIDE REACH IS OVER AND OBSTRUCTION, THE REACH AND CLEARANCES SHALL BE AS SHOWN IN FIGURE 11B-5D(C). (1118B.6)

NO.	DATE	DRAWN	REVISIONS -	CHK'D	APP'D
A	3/20/25	-	30 % CONCEPT DESIGN		
B	4/25/25	-	FINAL CONCEPT DESIGN		
C	7/18/25	-	40 % DESIGN		
D	9/19/25	-	80% DESIGN		

NOT FOR CONSTRUCTION

NO.	DATE	DRAWN	REVISIONS -	CHK'D	APP'D

80% DESIGN

Jacobs
2600 MICHELSON DRIVE, SUITE 500
IRVINE, CA 92612
T: (949) 224-7500
F: (949) 224-7501

LICENSED ARCHITECT — ROBERT O. WINSTEAD — C-24259 — 02/28/27 Renewal Date — STATE OF CALIFORNIA

SCALE: AS SHOWN
DRAWN: A. TERMYNA
CHECKED: D. WINSTEAD
DESIGNED: R. SMITH
ENGINEER / ARCHITECT

CHIEF OF DESIGN
DATE

TERMINAL ISLAND MARITIME SUPPORT FACILITY

ARCHITECTURAL NOTES

THE PORT OF LOS ANGELES
ENGINEERING DIVISION
425 S. PALOS VERDES STREET SAN PEDRO CA 90731-3309

DRAWING NUMBER 1-3513
SHEET NUMBER A-0.3

RVT: Autodesk Docs://05 CA_D3377901_PCLA TIMSF1-3513-JED-12A_WaterRoom_R25.rvt
DATE: 9/19/2025 2:14:19 PM

P. EMPLOYEE WORK AREAS & WORK STATIONS

WORK STATION IS DEFINED AS "AN AREA DEFINED BY EQUIPMENT AND/OR WORK SURFACES INTENDED FOR USE BY EMPLOYEES ONLY, GENERALLY FOR ONE OR A SMALL NUMBER OF EMPLOYEES AT A TIME..." (1102B)

1. EMPLOYEE AREAS SHALL COMPLY WITH THE ACCESSIBILITY REQUIREMENTS OF CHAPTER 11B. (1123B.1)

2. SPECIFIC WORKSTATIONS NEED ONLY COMPLY WITH AISLE WIDTH AND FLOORS AND LEVELS, AND ENTRYWAYS SHALL BE 32 INCHES IN CLEAR WIDTH. AISLES SHALL NOT BE LESS THAN 36 INCHES IF SERVING ONLY ONE SIDE, AND NOT LESS THAN 44 INCHES WIDE IF SERVING BOTH SIDES. (1123B.2, 1133B.6.2)

3. EMPLOYEE WORK AREAS SHALL HAVE A MINIMUM OF 36 INCHES CLEAR WIDTH ACCESS. (1105B.3.2.3, 1105B.3.3.2)

Q. FIXED OR BUILT-IN SEATING, TABLES, AND COUNTERS

1. WHERE FIXED OR BUILT-IN SEATING, TABLES, OR COUNTERS ARE PROVIDED IN ACCESSIBLE PUBLIC USE OR COMMON USE AREAS, FIVE PERCENT BUT NEVER LESS THAN ONE MUST BE ACCESSIBLE, AS REQUIRED IN SECTION 1122B. (1122B.1)

2. IF SEATING SPACES FOR PERSONS IN WHEELCHAIRS ARE PROVIDED AT FIXED TABLES OR COUNTERS, CLEAR FLOOR SPACE COMPLYING WITH SECTION 1118B.4 SHALL BE PROVIDED. SUCH CLEAR FLOOR SPACE SHALL NOT OVERLAP KNEE SPACE BY MORE THAN 19 INCHES. (1122B.2, FIG 11B-13)

3. IF SEATING FOR PERSONS IN WHEELCHAIRS IS PROVIDED AT FIXED TABLES OR COUNTERS, KNEE SPACES AT LEAST 27 INCHES HIGH, 30 INCHES WIDE, AND 19 INCHES DEEP SHALL BE PROVIDED. (1122B.3, FIG 11B-13)

4. THE TOPS OF TABLES AND COUNTERS SHALL BE 28 INCHES TO 34 INCHES FROM THE FLOOR OR GROUND. (1122B.4)

5. WHERE A SINGLE COUNTER CONTAINS MORE THAN ONE TRANSACTION STATION, SUCH AS A BANK COUNTER WITH MULTIPLE TELLER WINDOWS OR A RETAIL SALES COUNTER WITH MULTIPLE CASH REGISTER STATIONS, AT LEAST 5 PERCENT, BUT NEVER LESS THAN ONE OF EACH TYPE OF STATION SHALL BE LOCATED AT A SECTION OF COUNTER THAT IS AT LEAST 36 INCHES LONG AND NO MORE THAN 28 TO 34 INCHES HIGH. (1122B.4)

R. SIGNS AND IDENTIFICATION

CALIFORNIA'S STANDARDS FOR SIGNAGE ARE MORE STRINGENT THAN SECTION 4.30 OF THE ADA STANDARDS FOR ACCESSIBLE DESIGN. (1117B.5)

THE INTERNATIONAL SYMBOL OF ACCESSIBILITY SHALL BE THE STANDARD USED TO IDENTIFY FACILITIES THAT ARE ACCESSIBLE TO AND USABLE BY PHYSICALLY DISABLED PERSONS AS SET FORTH IN TITLE 24 AND AS SPECIFICALLY REQUIRED IN THIS SECTION. (1117B.5.8.1, FIG 11B-6)

1. THE INTERNATIONAL SYMBOL OF ACCESSIBILITY SHALL CONSIST OF A WHITE FIGURE ON A BLUE BACKGROUND. THE BLUE SHALL BE EQUAL TO COLOR NO. 15090 IN FEDERAL STANDARD 595B. (1117B5.8.1.1)

2. ALL BUILDING AND FACILITY ENTRANCES THAT ARE ACCESSIBLE TO AND USABLE BY PERSONS WITH DISABILITIES AND AT EVERY MAJOR JUNCTION ALONG OR LEADING TO AN ACCESSIBLE ROUTE OF TRAVEL SHALL BE IDENTIFIED WITH A SIGN DISPLAYING THE INTERNATIONAL SYMBOL OF ACCESSIBILITY AND WITH ADDITIONAL DIRECTIONAL SIGNS TO BE VISIBLE TO PERSONS ALONG APPROACHING CIRCULATION PATHS. (1117B.5.8.1.2, 1127B.3)

3. WHERE PERMANENT IDENTIFICATION SIGNS ARE PROVIDED FOR ROOMS AND SPACES OF A BUILDING OR SITE, RAISED CHARACTERS SHALL BE PROVIDED AND SHALL BE ACCOMPANIED BY BRAILLE IN CONFORMANCE WITH SECTION 1117B.5.2 THROUGH 1117B.5.7. SIGNS SHALL BE INSTALLED ON THE WALL ADJACENT TO THE LATCH OUTSIDE OF THE DOOR. WHERE THERE IS NO WALL SPACE ON THE LATCH SIDE, INCLUDING AT DOUBLE LEAF DOORS, SIGNS SHALL BE PLACED ON THE NEAREST ADJACENT WALL, PREFERABLY ON THE RIGHT. MOUNTING HEIGHT SHALL BE 60 INCHES ABOVE THE FINISHED FLOOR TO THE CENTERLINE OF THE SIGN. MOUNTING LOCATION SHALL BE DETERMINED SO THAT A PERSON MAY APPROACH WITHIN 3INCHES OF SIGNAGE WITHOUT ENCOUNTERING PROTRUDING OBJECTS OR STANDING WITHIN THE SWING OF A DOOR. (1117B.5.1, 1117B.5.7)

4. WHEN SIGNS DIRECT TO OR GIVE INFORMATION ABOUT PERMANENT ROOMS AND FUNCTIONAL SPACES OF A BUILDING OR SITE, THEY SHALL COMPLY WITH SECTIONS 1117B.5.2, 1117B.5.3, AND 1117B.5.4. FOR OTHER MEANS OF EGRESS SIGNS AND IDENTIFICATION SEE CHAPTER 10, SECTIONS 1011.3, 1022.8, 1008.1.9.7, 1007.9, 1007.10, 1007.11 AND 1007.4. (1117B.5.1.2)

5. WHEN RAISED CHARACTERS OR WHEN PICTOGRAM SYMBOLS ARE USED, THEY SHALL CONFORM TO THE FOLLOWING: (1117B.5.5)
   a. CHARACTERS ON SIGNS SHALL BE RAISED 1/32-INCH MINIMUM AND SHALL BE SANS - SERIF UPPERCASE CHARACTERS ACCOMPANIED BY CONTRACTED (GRADE 2) BRAILLE COMPLYING WITH SECTION 1117B.5.6. (1117B.5.5.1)
   b. RAISED CHARACTERS OR SYMBOLS SHALL BE A MINIMUM OF 5/8 INCH HIGH AND A MAXIMUM OF 2 INCHES HIGH. (1117B.5.5.2)
   c. PICTORIAL SYMBOL SIGNS (PICTOGRAMS) SHALL BE ACCOMPANIED BY THE VERBAL DESCRIPTION PLACED DIRECTLY BELOW THE PICTOGRAM. THE OUTSIDE DIMENSION OF THE PICTOGRAM FIELD SHALL BE A MINIMUM OF 6 INCHES IN HEIGHT. (1117B.5.5.3)
   d. CHARACTERS AND BRAILLE SHALL BE IN A HORIZONTAL FORMAT. BRAILLE SHOULD BE PLACED A MINIMUM OF 3/8-INCH AND A MAXIMUM OF 1/2 INCH DIRECTLY BELOW THE TACTILE CHARACTERS; FLUSH LEFT OR CENTERED. WHEN TACTILE SIGN IS MULTI-LINED, ALL BRAILLE SHALL BE PLACED TOGETHER BELOW ALL LINES OF TACTILE TEXT. (1117B.5.5.4)

6. CHARACTERS ON SIGNS SHALL HAVE A WIDTH-TO-HEIGHT RATIO OF BETWEEN 3:5 AND 1:1 AND A STROKE WIDTH-TO-HEIGHT RATIO BETWEEN 1:5 AND 1:10. (1117B.5.3)

7. CHARACTERS, SYMBOLS AND THEIR BACKGROUND SHALL HAVE A NON-GLARE FINISH. CHARACTERS AND SYMBOLS SHALL CONTRAST WITH THEIR BACKGROUND, EITHER LIGHT CHARACTERS ON A DARK BACKGROUND OR DARK CHARACTERS ON A LIGHT BACKGROUND. (1117B.5.2)

8. CHARACTERS AND NUMBERS ON SIGNS REQUIRED TO BE ACCESSIBLE BY SECTION 1117B.5.1 ITEMS 2 AND 3 SHALL BE SIZED ACCORDING TO THE TABLE IN SECTION 1117B.5.4. . (1117B.5.4)

9. CONTRACTED (GRADE 2) BRAILLE SHALL BE USED WHEREVER BRAILLE IS REQUIRED IN OTHER PORTIONS OF THESE STANDARDS. DOTS SHALL BE 1/10 INCH ON CENTERS IN EACH CELL WITH 2/10-INCH SPACE BETWEEN CELLS. DOTS SHALL BE RAISED A MINIMUM OF 1/40 INCH ABOVE THE BACKGROUND. (1117B.5.6)

10. POLE SUPPORTED PEDESTRIAN TRAFFIC CONTROL BUTTONS SHALL BE IDENTIFIED WITH COLOR CODING CONSISTING OF A TEXTURED HORIZONTAL YELLOW BAND 2 INCHES IN WIDTH ENCIRCLING THE POLE, AND A 1 INCH WIDE DARK BORDER BAND ABOVE AND BELOW THIS YELLOW BAND. COLOR-CODING SHOULD BE PLACED IMMEDIATELY ABOVE THE CONTROL BUTTON. CONTROL BUTTONS SHALL BE LOCATED NO HIGHER THAN 48 INCHES ABOVE THE SURFACE ADJACENT TO THE POLE. (1117B.5.9)

11. PROVIDE PLANS, SPECIFICATIONS AND DETAILS FOR ALL SIGNS AND IDENTIFICATION AS SPECIFIED IN SECTION 1117B.5.1, WHEN INCLUDED IN NEW CONSTRUCTION, ALTERATIONS, ADDITIONS OR RENOVATIONS. (1117B.5.1 ITEM 4.1)

S. ELECTRICAL

1. THE HIGHEST OPERABLE PART OF ALL CONTROLS, DISPENSERS, RECEPTACLES AND OTHER OPERABLE EQUIPMENT SHALL BE INSTALLED AT AN ACCESSIBLE LOCATION MEETING THE CLEARANCES AND REACH RANGE REQUIREMENTS OF SECTIONS 1118B.5 AND 1118B.6. (1117B.6.3)

2. CONTROLS AND SWITCHES INTENDED TO BE USED BY THE OCCUPANT OF THE ROOM OR AREA TO CONTROL LIGHTING AND RECEPTACLE OUTLETS, APPLIANCES, OR COOLING, HEATING, AND VENTILATING EQUIPMENT, SHALL BE LOCATED NO MORE THAN 48 INCHES MEASURED FROM THE TOP OF THE OUTLET BOX NOR LESS THAN 15 INCHES MEASURED FROM THE BOTTOM OF THE OUTLET BOX TO THE LEVEL OF THE FINISH FLOOR OR WORKING PLATFORM. (1117B.6.5.1)

3. ELECTRICAL RECEPTACLE OUTLETS ON BRANCH CIRCUITS OF 30 AMPERES OR LESS AND COMMUNICATION SYSTEM RECEPTACLES SHALL BE LOCATED NO MORE THAN 48 INCHES MEASURED FROM THE TOP OF THE RECEPTACLE OUTLET BOX OR RECEPTACLE HOUSING NOR LESS THAN 15 INCHES MEASURED FROM THE BOTTOM OF THE RECEPTACLE OUTLET BOX OR RECEPTACLE HOUSING TO THE LEVEL OF THE FINISH FLOOR OR WORKING PLATFORM. (1117B.6.5.2)

T. NOTIFICATION APPLIANCES FOR HEARING IMPAIRED

NOTE: IF EMERGENCY WARNING SYSTEMS ARE PROVIDED, THEY SHALL INCLUDE BOTH AUDIBLE ALARMS AND VISUAL ALARMS COMPLYING WITH NFPA 72 AND CHAPTER 9, SECTIONS 907.5.2.1 AND 907.5.2.3. (1114B.2.2)

1. APPROVED NOTIFICATION APPLIANCES FOR THE HEARING AND VISUALLY IMPAIRED SHALL BE INSTALLED IN ACCORDANCE WITH THE PROVISIONS OF NFPA 72 IN THE FOLLOWING AREAS:

A. RESTROOMS
B. CORRIDORS
C. MUSIC PRACTICE ROOMS
D. BAND ROOMS
E. GYMNASIUMS
F. MULTIPURPOSE ROOMS
G. OCCUPATIONAL SHOPS
H. OCCUPIED ROOMS WHERE AMBIENT NOISE
IMPAIRS HEARING OF THE FIRE ALARM
I. LOBBIES
J. MEETING ROOMS
K. ANY OTHER AREA FOR COMMON USE

U. ADDITIONAL MISCELLANEOUS REQUIREMENTS

1. QUALIFIED HISTORICAL BUILDINGS SHALL COMPLY WITH THE STATE HISTORICAL BUILDING CODE, PART 8, TITLE 24, OF THE CALIFORNIA CODE OF REGULATIONS AS PRINTED IN VOLUME 2 OF TITLE 24. (1119B & 1135B.1)

2. WHEN A COMMERCIAL FACILITY IS LOCATED IN A PRIVATE RESIDENCE, THE PORTION OF THE RESIDENCE USED EXCLUSIVELY AS A RESIDENCE IS NOT COVERED BY CHAPTER 11B, EXCEPT AS REQUIRED BY 1111B.5, BUT THAT PORTION USED BOTH FOR THE COMMERCIAL FACILITY AND FOR RESIDENTIAL PURPOSES IS COVERED BY THE NEW CONSTRUCTION AND ALTERATION REQUIREMENTS OF THE CODE. (1101B.6.1)

3. THE PORTION OF THE RESIDENCE COVERED EXTENDS TO THOSE ELEMENTS USED TO ENTER THE COMMERCIAL FACILITY, INCLUDING THE HOMEOWNER'S FRONT SIDEWALK, IF ANY, THE DOOR OR ENTRY WAY, AND HALLWAYS; AND THOSE PORTIONS OF THE RESIDENCE, INTERIOR OR EXTERIOR, AVAILABLE TO OR TO BE USED BY EMPLOYEES OR VISITORS OF THE COMMERCIAL FACILITY, INCLUDING SANITARY FACILITIES. (1101B.6.2)

V. CLEANER AIR SYMBOL

1. STRICTLY FOR PUBLICLY FUNDED FACILITIES OR ANY FACILITIES LEASED OR RENTED BY STATE OF CALIFORNIA, NOT CONCESSIONARIES. THIS SYMBOL SHALL BE THE STANDARD USED TO IDENTIFY A ROOM, FACILITY AND PATHS OF TRAVEL THAT ARE ACCESSIBLE TO AND USABLE BY PEOPLE WHO ARE ADVERSELY IMPACTED BY AIRBORNE CHEMICALS OR PARTICULATE(S) AND/OR THE USE OF ELECTRICAL FIXTURES AND/OR DEVICES. WHEN USED, THE SYMBOL SHALL COMPLY WITH SECTIONS 1117B.5.11.1, 1117B.5.11.2, AND 1117B.5.11.3. (1117B.5.11, FIG 11B-40)

W. GROUP B OCCUPANCIES

1. OFFICE AREAS, CONFERENCE ROOMS, CLASSROOMS, DISPATCH ROOMS, AND SIMILAR AREAS, ALONG WITH RELATED SANITARY FACILITIES, SHALL BE MADE ACCESSIBLE. (1105B.3.5.1)

2. DETENTION-AREA VISITOR ROOM SHALL BE MADE ACCESSIBLE. (11058.3.5.2)

3. AT LEAST ONE DETENTION CELL FACILITY WITH SUPPORTING SANITARY FACILITIES SHALL BE MADE ACCESSIBLE. (1105B.3.5.3)

4. COURTROOM AREAS, INCLUDING THE JUDGE'S CHAMBERS AND BENCH, COUNSEL TABLES, JURY BOX, WITNESS STAND AND PUBLIC SEATING AREA SHALL BE MADE ACCESSIBLE. (1105B.3.5.4)

X. STORAGE FACILITIES AND AREAS

1. IF FIXED STORAGE FACILITES SUCH AS CABINETS, SHELVES, CLOSETS, OR DRAWERS ARE PROVIDED WHERE ACCESS IS REQUIRED BY SECTION 101.17.11, AT LEAST ONE OF EACH TYPE SHALL BE ACCESSIBLE IN TERMS OF CLEAR SPACE, REACH RANGES, AND HARDWARE. ADDITIONAL STORAGE MAY BE PROVIDED OUTSIDE OF REQUIRED REACH RANGES. SEC 11258.1. FIG 11B-5D.

2. A CLEAR FLOOR SPACE AT LEAST 30" BY 48' THAT ALLOWS EITHER A FORWARD OR PARALLEL APPROACH BY A PERSON USING A WHEELCHAIR SHALL BE PROVIDED AT ACCESSIBLE STORAGE FACILITIES. SEC 11258.2 FIG 11B·SA.

3. ACCESSIBLE STORAGE SPACES SHALL BE WITHIN AT LEAST ONE OF THE HEIGHT RANGES SPECIFIED IN SECTIONS 1118B.5 AND 11186.6. SEC 11256.3

4. HARDWARE FOR ACCESSIBLE STORAGE FACILITIES SHALL BE WITHIN AT LEAST ONE OF THE HEIGHT RANGES SPECIFIED IN SECTIONS 1118B.5 AND 1118B.6 AND SHALL BE OPERABLE WITH ONE HAND AND SHALL NOT REQUIRE TIGHT GRASPING, PINCHING, OR TWISTING OF THE WRIST. THE FORCE REQUIRED TO ACTIVATE THE HARDWARE SHALL BE NO GREATER THAN 5 POUNDS. TOUCH LATCHES AND U SHAPED PULLS ARE ACCEPTABLE. SEC 1125B.4

5. CLOTHES RODS SHALL BE A MAXIMUM OF 54' FROM THE FLOOR FOR A SIDE APPROACH. WHERE THE DISTANCE FROM THE WHEELCHAIR TO THE CLOTHES ROD OR SHELF EXCEEDS 10", AS IN CLOSETS WITHOUT ACCESSIBLE DOORS, THE HEIGHT AND DEPTH TO THE ROD OR SHELF SHALL COMPLY WITH FIGURE 11B-5D. SEC 1125B.3

6. THE DOORWAY PROVIDING ACCESS TO STORAGE AREAS SHALL BE NOT LESS THAN 32'IN CLEAR WIDTH. STORAGE AREAS SHALL BE MADE ACCESSIBLE AS REQUIRED IN SECTION 1125B. SEC 1105B.3.6.2, 1107B.3.2, & 1110B.2.2

7. HARDWARE FOR ACCESSIBLE STORAGE FACILITIES SHALL COMPLY WITH SECTION 1117B.6.2 AND 1117B.6.3 FOR CLEAR SPACES AND HEIGHT REQUIREMENTS. (11258.4)

8. HARDWARE CONTROLS AND OPERATING MECHANISMS SHALL BE OPERABLE WITH ONE HAND AND SHALL NOT REQUIRE TIGHT GRASPING, PINCHING, OR TWISTING OF THE WRIST. THE FORCE REQUIRED TO ACTIVATE CONTROLS SHALL BE NO GREATER THAN 5 POUNDS OF FORE. (1117B.6.4)

Y. PUBLIC UTILITY FACILITIES

NOTE: FACILITIES LOCATED IN OPERATIONAL AREAS WHICH WOULD NOT HAVE ANY REASONABLE AVAILABILITY TO OR USAGE BY PERSONS WHO USE WHEELCHAIRS FOR MOBILITY ARE NOT SUBJECT TO THE WHEELCHAIR ACCESSIBILITY REQUIREMENTS OF THESE REGULATIONS. (1105B.3.4.2. EXCEPTION 1)

1. OFFICE AREAS, MEETING ROOMS, AND SIMILAR AREAS TOGETHER WITH RELATED TOILET ROOMS, IN PUBLIC UTILITY FACILITIES, SHALL BE MADE ACCESSIBLE. (1105B.3.4.1)

2. PUBLIC TOUR AREAS, TO THE EXTENT THAT SUCH PUBLIC TOURS ARE CONDUCTED THROUGH OR ABOUT A FACILITY, OR WHERE THE PUBLIC IS PERMITTED TO WALK IN SUCH AREAS, SHALL PROVIDE ACCESSIBILITY IN THOSE PORTIONS OF THE FACILITY AND GROUNDS WHERE THIS OCCURS. (1105B.3.4.2)

3. VISITOR OVERLOOK FACILITIES, ORIENTATION AREAS AND SIMILAR PUBLIC USE AREAS, AND ANY SANITARY FACiliTIES THAT SERVE THESE FACILITIES SHALL BE MADE ACCESSIBLE. (1105B.3.4.3)

4. WHERE PUBLIC PARKING IS PROVIDED, SPACES SHALL BE PROVIDED FOR PERSONS WITH DISABILITIES AS SPECIFIED IN SECTION 1129B AND 11308. (1105B.3.4.4)

NO.	DATE	DRAWN	REVISIONS -	CHK'D	APP'D
A	3/20/25	-	30 % CONCEPT DESIGN		
B	4/25/25	-	FINAL CONCEPT DESIGN		
C	7/18/25	-	40 % DESIGN		
D	9/19/25	-	80% DESIGN		

NOT FOR CONSTRUCTION

80% DESIGN

Jacobs
2600 MICHELSON DRIVE, SUITE 500
IRVINE, CA 92612
T: (949) 224-7500
F: (949) 224-7501

LICENSED ARCHITECT ROBERT G SMITH C-34258 02/28/2027 RENEWAL DATE STATE OF CALIFORNIA

SCALE: AS SHOWN
DRAWN: A. TERMYNA
CHECKED: D. WINSTEAD
DESIGNED: R. SMITH
ENGINEER / ARCHITECT

TERMINAL ISLAND MARITIME SUPPORT FACILITY

ARCHITECTURAL NOTES

THE PORT OF LOS ANGELES
ENGINEERING DIVISION
425 S. PALOS VERDES STREET SAN PEDRO CA 90731-3309

DRAWING NUMBER 1-3513 SHEET NUMBER A-0.4

RVT: Autodesk Docs://US CA_D3371901_POLA TIMSF/1-3513-JEG-12-A_WashRoom_R25.rvt
DATE: 9/15/2025 2:14:19 PM

CITY OF LOS ANGELES:
DEPT. OF BUILDING & SAFETY - ENGINEERING BUREAU
SUPPLEMENTAL PLAN REVIEW CHECKLIST

A. SANITARY FACILITIES (GENERAL)

1. BATHING AND TOILET FACILITIES THAT SERVE BUILDINGS, FACILITIES OR PORTIONS OF BUILDINGS OR FACILITIES THAT ARE REQUIRED BY THESE STANDARDS TO BE ACCESSIBLE TO PERSONS WITH DISABILITIES, SHALL BE ON AN ACCESSIBLE ROUTE AND SHALL CONFORM TO THE REQUIREMENTS OF SECTION 1115B. (1115B.1)

2. WHERE SEPARATE FACILITIES ARE PROVIDED FOR PERSONS OF EACH SEX, THESE FACILITIES SHALL BE ACCESSIBLE TO PERSONS WITH DISABILITIES. WHERE UNISEX FACILITIES ARE PROVIDED, THESE FACILITIES SHALL BE ACCESSIBLE TO PERSONS WITH DISABILITIES. (1115B.I.1, FIG I1B-1A)

	DIM.
TOILET CENTERING FROM WALL	18"
TOILET SEAT HEIGHT	17"-19"
GRAB BAR HEIGHT (SIDE)	33"
TOILET PAPER IN FRONT OF TOILET	12" MAX
NAPKIN DISPOSAL IN FRONT OF TOILET	12" MAX
DISPENSER OR MIRROR HEIGHT	40" MAX
LAVATORY/SINK TOP HEIGHT	34" MAX
LAVATORY/SINK KNEE CLEARANCE	27" MIN
URINAL LIP HEIGHT	17" MAX
URINAL FLUSH HANDLE HEIGHT	44" MAX
DRINKING FOUNTAIN BUBBLER HEIGHT	36" MAX
DRINKING FOUNTAIN KNEE CLEARANCE	27" MIN
RAMP/STAIR HANDRAIL HEIGHT	34"-38"

3. WHERE FACILITIES ARE TO BE USED SOLELY BY SMALL CHILDREN, THE SPECIFIC HEIGHTS AND CLEARANCES MAY BE ADJUSTED TO MEET THEIR ACCESSIBILITY NEEDS. SEE TABLE ABOVE FOR SUGGESTED MOUNTING HEIGHTS AND CLEARANCES. (1115B.1.2)

4. THE DIMENSIONS ARE RECOMMENDED BY THE DIVISION OF THE STATE ARCHITECT, OFFICE OF REGULATION SERVICES. THESE RECOMMENDATIONS ARE BASED ON THE FEDERAL "RECOMMENDATIONS FOR ACCESSIBILITY FOR CHILDREN IN ELEMENTARY SCHOOL" AND OTHER RECOGNIZED PUBLICATIONS ON ACCESS FOR CHILDREN.

5. DOORWAYS LEADING TO MEN'S SANITARY FACILITIES SHALL BE IDENTIFIED BY AN EQUILATERAL TRIANGLE 1/4" THICK WITH EDGES 12" LONG AND A VERTEX POINTING UPWARD. WOMEN'S SANITARY FACILITIES SHALL BE IDENTIFIED BY A CIRCLE 1/4" THICK AND 12" IN DIAMETER. (1115B.6)

6. UNISEX SANITARY FACILITIES SHALL BE IDENTIFIED BY A CIRCLE 1/4" THICK, 12" IN DIAMETER, WITH A 1/4" THICK TRIANGLE SUPERIMPOSED ON THE CIRCLE AND WITHIN THE 12" DIAMETER. (1115B.6)

7. GEOMETRIC (CIRCLE & TRIANGLE) SYMBOLS ON SANITARY FACILITY DOORS SHALL BE CENTERED ON THE DOOR AT A HEIGHT OF 60" AND THEIR COLOR AND CONTRAST SHALL BE DISTINCTLY DIFFERENT FROM THE COLOR AND CONTRAST OF THE DOOR. (1115B.6)

NOTE: SEE ALSO SECTION 1117B.5.1 FOR ADDITIONAL SIGNAGE REQUIREMENTS APPLICABLE TO SANITARY FACILITIES.

B. SINGLE ACCOMMODATION SANITARY FACILITIES

NOTE: SINGLE ACCOMMODATION SANITARY FACILITY IS DEFINED AS 'A ROOM THAT HAS NOT MORE THAN ONE OF EACH TYPE OF SANITARY FIXTURE, IS INTENDED FOR THE USE BY ONLY ONE PERSON AT A THE TIME, HAS NO PARTITION AROUND THE TOILET, AND HAS A DOOR THAT CAN BE LOCKED ON THE INSIDE BY THE ROOM OCCUPANT." (202)

1. SHOW SUFFICIENT SPACE IN THE TOILET ROOM FOR A WHEELCHAIR MEASURING 30" WIDE BY 48" LONG TO ENTER THE ROOM AND PERMIT THE DOOR TO CLOSE. (1115.B.3.2.1)

2. SHOW A CLEAR FLOOR SPACE OF AT LEAST 60" IN DIAMETER, OR A T-SHAPED SPACE COMPLYING WITH FIGURES 11B-12(a) AND (b). NO DOOR SHALL ENCROACH INTO THIS SPACE FOR MORE THAN 12". (1115B.3.2.1, FIG I1B-1A)

3. DOORS SHALL NOT SWING INTO THE CLEAR FLOOR SPACE REQUIRED FOR ANY FIXTURE. (1115B.3.2.2)

4. SHOW THAT THE CENTERLINE OF THE WATER CLOSET FIXTURE SHALL BE 18"
FROM THE SIDE WALL OR PARTITION. ON THE OTHER SIDE OF THE WATER CLOSET, PROVIDE A MINIMUM 28" WIDE CLEAR FLOOR SPACE IF THE WATER CLOSET IS ADJACENT TO A FIXTURE OR A MINIMUM OF 32" WIDE CLEAR FLOOR SPACE IF THE WATER CLOSET IS ADJACENT TO A WALL OR PARTITION. THIS CLEAR SPACE SHALL EXTEND FROM THE REAR WALL TO THE FRONT OF THE WATER CLOSET. (1115B.4., FIG 11B-1A)

5. ALL DOOR, FIXTURES, AND CONTROLS SHALL BE ON AN ACCESSIBLE ROUTE WITH A MINIMUM CLEAR WIDTH OF 36" EXCEPT AT DOORS. IF A PERSON IN A WHEELCHAIR MUST MAKE A TURN AROUND AN OBSTRUCTION, THE MINIMUM CLEAR WIDTH OF THE ACCESSIBLE ROUTE SHALL BE AS SHOWN IN FIGURE 11B-5E. (1115B.3.2.4)

6. THE ENTRANCE DOOR SHALL CONTAIN A PRIVACY LATCH WHICH COMPLIES WITH SECTION 1117B.6. (1115B.3.2.7)

7. PROVIDE 18 INCHES CLEARANCE ON THE STRIKE SIDE OF THE DOOR. (1115B.3.1)

8. IN EXISTING BUILDINGS, A SINGLE ACCOMMODATION TOILET WATER CLOSET MAY BE IOCATED IN AN AREA WHICH PROVIDES A CLEAR SPACE OF 36" WIDE BY 48 INCHES LONG IN FRONT OF THE WATER CLOSET. (1115B.3.2)

C. SANITARY FACILITY FIXTURES & ACCESSORIES

1. SHOW THE HEIGHT OF ACCESSIBLE WATER CLOSETS SHALL BE A MINIMUM OF 17" AND A MAXIMUM OF 19" MEASURED TO THE TOP OF A MAXIMUM 2" HIGH TOILET SEAT, EXCEPT THAT 3' SEATS SHALL BE PERMITTED ONLY IN ALTERATIONS WHERE THE EXISTING FIXTURE IS LESS THAN 15" HIGH. (1115B.4.4)

2. SHOW A CLEAR FLOOR SPACE 30" BY 48" IN FRONT OF A LAVATORY TO ALLOW A FORWARD APPROACH. SUCH CLEAR FLOOR SPACE SHALL ADJOIN OR OVERLAP AN ACCESSIBLE ROUTE AND SHALL EXTEND A MAXIMUM OF 19" INTO KNEE AND TOE SPACE UNDERNEATH THE LAVATORY. A DOOR SWING SHALL NOT ENCROACH INTO THIS CLEAR SPACE. (1115B.4.3.3, 1115B.3.2.2, FIG 11B-1B)

3. SHOW THAT ALL LAVATORIES, WHEN LOCATED ADJACENT TO A SIDE WALL OR PARTITION, SHALL BE A MINIMUM DISTANCE OF 18" TO THE CENTER LINE OF THE FIXTURE. (1115B.4.3.2, FIG 11B-1A)

4. SHOW THAT LAVATORIES THAT ARE DESIGNATED TO BE ACCESSIBLE SHAUL BE A MINIMUM 17" IN HORIZONTAL DEPTH AND MOUNTED WITH THE RIM OR COUNTER EDGE NO HIGHER THAN 34" ABOVE THE FINISHED FLOOR AND WITH VERTICAL CLEARANCE MEASURED FROM THE BOTTOM OF THE APRON OR THE OUTSIDE BOTTOM EDGE OF THE LAVATORY OF 29", REDUCING TO 27" AT A POINT LOCATED 8" BACK FROM THE FRONT EDGE. IN ADDITION, A MINIMUM 9" HIGH TOE CLEARANCE MUST BE PROVIDED EXTENDING BACK TOWARD THE WALL TO A DISTANCE NO MORE THAN 6" FROM THE BACK WALL. THE TOE CLEARANCE SPACE MUST BE FREE OF EQUIPMENT OR OBSTRUCTIONS. (1115B.4.3.2, FIG 11B-1D)

5. SHOW THAT HOT WATER AND DRAIN PIPES UNDER ACCESSIBLE LAVATORIES SHALL BE INSULATED OR OTHERWISE COVERED. THERE SHALL BE NO SHARP OR ABRASIVE SURFACES UNDER LAVATORIES. (1115B.4.3.4)

6. WHERE URINALS ARE PROVIDED, AT LEAST ONE SHALL HAVE A CLEAR FLOOR SPACE 30" BY 48" IN FRONT OF THE URINAL TO ALLOW FORWARD APPROACH. (1115B.4.2.3)

7. SHOW THAT URINALS SHALL BE FLOOR MOUNTED, STALL·TYPE OR WALL HUNG. WHERE ONE OR MORE WALL H.UNG URINALS ARE PROVIDED, AT LEAST ONE WITH AN ELONGATED RIM PROJECTING A MINIMUM OF 14" FROM THE WALL, A MAXIMUM OF 17" FROM THE WALL, AND A MAXIMUM OF 17" ABOVE THE FLOOR SHALL BE PROVIDED. (11159.4.2.1)

8. NOTE THAT CONTROLS FOR WATER CLOSET FLUSH VALVES SHALL BE MOUNTED ON THE WIDE SIDE OF TOILET AREAS. AUTOMATIC SPRING TO LIFTED POSITION SEATS ARE NOT ALLOWED. (11158.4.1.5, 1115B.4.1.7)

9. NOTE THAT WATER CLOSET AND URINAL FLUSH VALVE CONTROLS, AND FAUCET AND OPERATING MECHANISM CONTROLS, SHALL BE OPERABLE WITH ONE HAND, SHALL NOT REQUIRE TIGHT GRASPING, PINCHING, OR TWISTING OF THE WRIST, AND SHALL BE MOUNTED NO MORE THAN 44" ABOVE THE FLOOR. (1115B.4.1.5, 1115B.4.2.2, 1115B.4.3.1)

10. NOTE THAT THE FORCE REQUIRED TO ACTIVATE WATER CLOSET AND URINAL FLUSH VALVE CONTROLS, AND FAUCET AND OPERATING MECHANISM CONTROLS, SHALL BE NO GREATER THAN 5 LBF. ELECTRONIC OR AUTOMATIC FLUSHING CONTROLS ARE ACCEPTABLE AND PREFERABLE. (1115B.4.1.5, 115B.4.2.2, 11158.4.3.1)

11. NOTE THAT SELF·CLOSING FAUCET CONTROL VALVES ARE ALLOWED IF THE FAUCET REMAINS OPEN FOR AT LEAST 10 SECONDS. (11158.4.3.1)

12. SHOW THAT MIRRORS SHALL BE MOUNTED WITH THE BOTTOM EDGE OF THE REFLECTING SURFACE NO HIGHER THAN 40" FROM THE FLOOR. (1115B.8.1)

13. IF MEDICINE CABINETS ARE PROVIDED, AT LEAST ONE SHALL BE LOCATED WITH A USABLE SHELF NO HIGHER THAN 44" ABOVE THE FLOOR. A CLEAR FLOOR SPACE 30" BY 48" COMPLYING WITH SECTION 1118B.4 SHALL BE PROVIDED IN FRONT OF A MEDICINE CABINET TO ALLOW A FORWARD OR PARALLEL APPROACH. (1115B.8.2)

14. WHERE TOWEL, SANITARY NAPKINS, WASTE RECEPTACLES, DISPENSERS, OR OTHER EQUIPMENT AND CONTROLS ARE PROVIDED, SHOW AT LEAST ONE OF EACH TYPE SHALL BE LOCATED ON AN ACCESSIBLE ROUTE, WITH ALL OPERABLE PARTS, INCLUDING COIN SLOTS, WITHIN 40" FROM THE FINISHED FLOOR AND SHALL COMPLY WITH SECTION 1117B.6. (1115B.8.3)

15. SHOW THAT TOILET TISSUE DISPENSERS SHALL BE LOCATED ON THE WALL WITHIN 12" OF THE FRONT EDGE OF THE TOILET SEAT, MOUNTED BELOW THE GRAB BAR AT A MINIMUM HEIGHT OF 19", AND 36" MAXIMUM TO THE FAR EDGE FROM THE REAR WALL. DISPENSERS THAT CONTROL DELIVERY OR THAT DO NOT PERMIT CONTINUOUS PAPER FLOW SHALL NOT BE USED. (11158.8.4, FIG I1B-1A)

16. SHOW THAT TOILET ROOM FLOORS SHALL HAVE A SMOOTH, HARD, NON-ABSORBENT SURFACE SUCH AS PORTLAND CEMENT,CONCRETE, CERAMIC TILE OR OTHER APPROVED MATERIAL WHICH EXTENDS UPWARD ONTO THE WALLS AT LEAST 5". WALLS WITHIN WATER CLOSET COMPARTMENTS AND WALLS WITHIN 24" OF THE FRONT AND SIDES OF URINALS SHALL BE SIMILARLY FINISHED TO A HEIGHT OF 48" AND, EXCEPT FOR STRUCTURAL ELEMENTS, THE MATERIALS USED IN SUCH WALLS SHALL BE A TYPE WHICH IS NOT ADVERSELY AFFECTED BY MOISTURE. (1115B.3.1.6)

D. GRAB BARS

1. SHOW THAT GRAB BARS FOR WATER CLOSETS NOT LOCATED WITHIN A COMPARTMENT SHALL COMPLY WITH SECTION 1115B.7 AND SHALL BE PROVIDED ON THE SIDE WALL CLOSEST TO THE WATER CLOSET AND ON THE REAR WALL. (1115B.4.1.3)

2. SHOW THAT GRAB BARS FOR WATER CLOSETS LOCATED WITHIN AN ACCESSIBLE COMPARTMENT SHALL COMPLY WITH SECTION 1115B.7 AND SHALL BE PROVIDED ON THE SIDE WALL CLOSEST TO THE WATER CLOSET AND ON THE REAR WALL. (1115B.4.1.3)

3. SHOW THAT GRAB BARS FOR WATER CLOSETS LOCATED WITHIN AMBULATORY ACCESSIBLE COMPARTMENTS SHALL BE PROVIDED ON BOTH SIDES OF THE COMPARTMENT. (1115B.4.1.3)

4. SHOW THAT THE SIDE GRAB BARS SHALL BE 42" LONG MINIMUM, LOCATED 12" MAXIMUM FROM THE REAR WALL, AND EXTEND 54" MINIMUM FROM THE REAR WALL. THE FRONT END SHALL BE POSITIONED 24" MINIMUM IN FRONT OF THE WATER CLOSET, AND SHALL BE SECURELY ATTACHED AND CENTERED 33" ABOVE AND PARALLEL TO THE FLOOR. (1115B.4.1.3.1, FIG I1B IA& IB)

5. SHOW THAT THE REAR GRAB BARS SHALL BE 36" LONG MINIMUM AND EXTEND FROM THE CENTERLINE OF THE WATER CLOSET 12" MINIMUM ON ONE SIDE AND 24" MINIMUM ON THE OTHER SIDE. THE REAR GRAB BAR SHALL BE SECURELY ATTACHED AND CENTERED 33" ABOVE AND PARALLEL TO THE FLOOR, EXCEPT THAT WHERE A TANK-TYPE TOILET IS USED, WHICH OBSTRUCTS PLACEMENT AT 33", THE BAR MAY BE AS HIGH AS 36", WITH 1 1/2" MINIMUM BETWEEN THE BAR AND TOP OF TANK. (1115B.4.1.3.2, FIG 11B-1A)

6. SHOW THE DIAMETER OR WIDTH OF THE GRIPPING SURFACES OF A GRAB BAR SHALL BE 1 1/4" TO 2" NOMINAL, OR THE SHAPE SHALL PROVIDE AN EQUIVALENT GRIPPING SURFACE. IF GRAB BARS ARE MOUNTED ADJACENT TO A WALL, THE SPACE BETWEEN THE WALL AND THE GRAB BARS SHALL BE 1 1/2".
(1115B.7.1, FIG 11B-1C)

7. NOTE THAT THE STRUCTURAL STRENGTH OF GRAB BARS, TUB AND SHOWER SEATS, FASTENERS, AND MOUNTING DEVICES SHALL MEET THE FOLLOWING SPECIFICATIONS: (1115B. 7.2)

A. BENDING STRESS IN A GRAB BAR OR SEAT INDUCED BY THE MAXIMUM BENDING MOMENT FROM THE APPLICATION OF A 250-LB POINT LOAD SHALL BE LESS THAN THE ALLOWABLE STRESS FOR THE MATERIAL OF THE GRAB BAR OR SEAT. (1115B.7.2.1)

B. SHEAR STRESS INDUCED IN A GRAB BAR OR SEAT BY THE APPLICATION OF A 250-LB POINT LOAD SHALL BE LESS THAN THE ALLOWABLE SHEAR STRESS FOR THE MATERIAL OF THE GRAB BAR OR SEAT, AND ITS MOUNTING BRACKET OR OTHER SUPPORT IS CONSIDERED TO BE FULLY RESTRAINED, THEN DIRECT AND TORSIONAL SHEAR STRESSES SHALL NOT EXCEED THE ALLOWABLE SHEAR STRESS. (1115B.7.2.2)

C. SHEAR FORCE INDUCED IN FASTENER OR MOUNTING DEVICES FROM THE APPLICATION OF A 250-LB POINT LOAD SHALL BE LESS THAN THE ALLOWABLE LATERAL LOAD OF EITHER THE FASTENER OR MOUNTING DEVICE OR THE SUPPORTING STRUCTURE, WHICHEVER HAS THE SMALLER ALLOWABLE LOAD. (1115B.7.2.3)

D. TENSILE FORCE INDUCED IN A FASTENER BY A DIRECT TENSION FORCE OF A 250-LB POINT LOAD, PLUS THE MAXIMUM MOMENT FROM THE APPLICATION OF A 250-LB POINT LOAD, SHALL BE LESS THAN THE ALLOWABLE WITHDRAWAL LOAD BETWEEN THE FASTENER AND SUPPORTING STRUCTURE. (1115B.7.2.4)

E. GRAB BARS SHALL NOT ROTATE WITHIN THEIR FITTINGS. (1115B.7.2.5)

8. NOTE THAT THE GRAB BAR AND ANY WALL OR OTHER SURFACE ADJACENT TO IT SHALL BE FREE OF ANY SHARP OR ABRASIVE ELEMENTS. EDGES SHAUL HAVE A MINIMUM RADIUS OF 1/8". (11158.7.3)

E. TOILET AND BATHING ROOM CLEARANCES

9. DOORS TO UNISEX TOILET ROOMS AND UNISEX BATHING ROOMS SHALL HAVE PRIVACY LATCHES. §11B-213.2.1

10. MIRRORS LOCATED ABOVE THE LAVATORIES OR COUNTERTOPS SHALL BE INSTALLED WITHIN THE BOTTOM EDGE OF THE REFLECTING SURFACE 40 INCHES MAXIMUM ABOVE THE FINISH FLOOR OR GROUND. MIRRORS NOT LOCATED ABOVE THE LAVATORIES OR COUNTERTOPS SHALL BE INSTALLED WITH THE BOTTOM EDGE OF THE REFLECTING SURFACE 35 INCHES MAXIMUM ABOVE THE FINISH FLOOR OR GROUND. §11B-603.3

11. COAT HOOKS SHALL BE LOCATED WITHIN ONE OF THE REACH RANGES SPECIFIED IN SECTION 11B-308. SHELVES SHALL BE LOCATED 40 INCHES MINIMUM AND 48 INCHES MAXIMUM ABOVE THE FINISH FLOOR. MEDICINE CABINETS SHALL BE LOCATED WITH A USABLE SHELF NO HIGHER THAN 44 INCHES MAXIMUM ABOVE THE FINISH FLOOR. §11B-603.4

12. WHERE TOWEL OR SANITARY NAPKIN DISPENSERS, WASTE RECEPTACLES, OR OTHER ACCESSORIES ARE PROVIDED IN TOILET FACILITIES, AT LEAST ONE OF EACH TYPE SHALL BE LOCATED ON AN ACCESSIBLE ROUTE. ALL OPERABLE PARTS, INCLUDING COIN SLOTS, SHALL BE 40 INCHES MAXIMUM ABOVE THE FINISH FLOOR. BABY CHANGING STATIONS ARE NOT REQUIRED TO COMPLY WITH SECTION 11B-603.5 (SEE EXCEPTION) §11B-603.5

F. WATER CLOSETS AND TOILET COMPARTMENTS

13. FLUSH CONTROLS SHALL BE HAND OPERATED OR AUTOMATIC. HAND OPERATED FLUSH CONTROLS SHALL COMPLY WITH SECTION 11B-309.4 OPERATION EXCEPT THEY SHALL BE LOCATED 44 INCHES MAXIMUM ABOVE THE FLOOR. FLUSH CONTROLS SHALL BE LOCATED ON THE OPEN SIDE OF THE WATER CLOSET EXCEPT IN AMBULATORY ACCESSIBLE COMPARTMENTS COMPLYING WITH SECTION 11B-604.8.2 AMBULATORY ACCESSIBLE COMPARTMENTS. §11B-604.6

14. TOILET PAPER DISPENSERS SHALL COMPLY WITH SECTION 11B-309.4 OPERATION AND SHALL BE 7 INCHES MINIMUM AND 9 INCHES MAXIMUM IN FRONT OF THE WATER CLOSET MEASURED TO THE CENTERLINE OF THE DISPENSER. THE OUTLET OF THE DISPENSER SHALL BE BELOW THE GRAB BAR, 19 INCHES MINIMUM ABOVE THE FINISH FLOOR AND SHALL NOT BE LOCATED BEHIND THE GRAB BARS. DISPENSERS SHALL NOT BE OF A TYPE THAT CONTROL DELIVERY OR THAT DOES NOT ALLOW CONTINUOUS PAPER FLOW. §11B-604.7

15. SANITARY NAPKIN DISPOSAL UNITS, IF PROVIDED, SHALL COMPLY WITH SECTION 11B-309.4 AND SHALL BE WALL MOUNTED AND LOCATED ON THE SIDEWALL BETWEEN THE REAR WALL OF THE TOILET AND THE TOILET PAPER DISPENSER, ADJACENT TO THE TOILET PAPER DISPENSER. THE DISPOSAL UNIT SHALL BE LOCATED BELOW THE GRAB BAR WITH THE OPENING OF THE DISPOSAL UNIT 19 INCHES MINIMUM (483 MM) ABOVE THE FINISH FLOOR. §11B-604.7.2

16. URINALS SHALL BE THE STALL-TYPE OR THE WALL-HUNG TYPE WITH THE RIM 17 INCHES MAXIMUM ABOVE THE FINISH FLOOR OR GROUND. URINALS SHALL BE 13½ INCHES DEEP MINIMUM MEASURED FROM THE OUTER FACE OF THE URINAL RIM TO THE BACK OF THE FIXTURE. §11B-605.2

17. FLUSH CONTROLS SHALL BE HAND OPERATED OR AUTOMATIC. HAND OPERATED FLUSH CONTROLS SHALL COMPLY WITH SECTION 11B-309 OPERABLE PARTS EXCEPT THAT THE FLUSH CONTROL SHALL BE MOUNTED AT A MAXIMUM HEIGHT OF 44 INCHES ABOVE THE FINISH FLOOR. §11B-605.4

18. FOR LAVATORIES AND SINKS, A CLEAR FLOOR SPACE COMPLYING WITH SECTION 11B-305 CLEAR FLOOR OR GROUND SURFACES, POSITIONED FOR A FORWARD APPROACH, AND KNEE AND TOE CLEARANCE COMPLYING WITH SECTION 11B-306 KNEE AND TOE CLEARANCE SHALL BE PROVIDED. §11B-606.2

19. LAVATORIES AND SINKS SHALL BE INSTALLED WITH THE FRONT OF THE HIGHER OF THE RIM OR COUNTER SURFACE 34 INCHES MAXIMUM ABOVE THE FINISH FLOOR OR GROUND. §11B-606.3

NO.	DATE	DRAWN	REVISIONS -	CHK'D	APP'D
A	3/20/25	-	30 % CONCEPT DESIGN		
B	4/25/25	-	FINAL CONCEPT DESIGN		
C	7/18/25	-	40 % DESIGN		
D	9/19/25	-	80% DESIGN		

NOT FOR CONSTRUCTION

NO.	DATE	DRAWN	REVISIONS -	CHK'D	APP'D

80% DESIGN

Jacobs
2600 MICHELSON DRIVE, SUITE 500
IRVINE, CA 92612
T: (949) 224-7500
F: (949) 224-7501

LICENSED ARCHITECT ROBERT G. SMITH C-34258 02/28/2027 RENEWAL DATE STATE OF CALIFORNIA

SCALE: AS SHOWN
DRAWN: A. TERMYNA
CHECKED: D. WINSTEAD
DESIGNED: R. SMITH
ENGINEER / ARCHITECT

TERMINAL ISLAND MARITIME SUPPORT FACILITY

ARCHITECTURAL NOTES

THE PORT OF LOS ANGELES
ENGINEERING DIVISION
425 S. PALOS VERDES STREET SAN PEDRO CA 90731-3309

DRAWING NUMBER 1-3513
SHEET NUMBER A-0.5

RVT: Autodesk Docs://US CA_D3371901_POLA TIMSF/1-3513-JEG-12-A_WashRoom_R25.rvt
DATE: 9/15/2025 2:14:19 PM

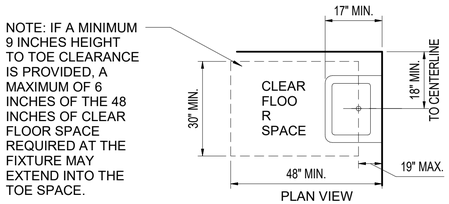

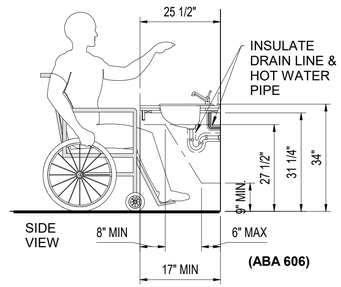

G1A-0.6 / A-0.6 ABA - LAVATORY CLEARANCE

SCALE: 1/2" = 1'-0"

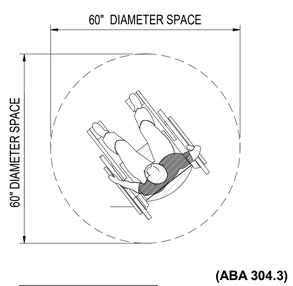

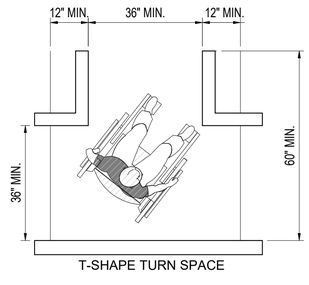

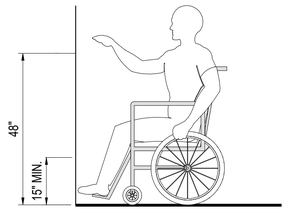

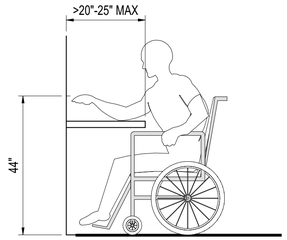

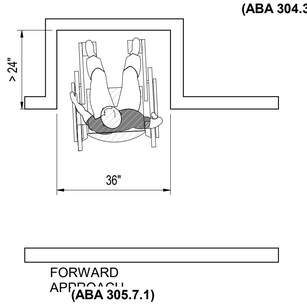

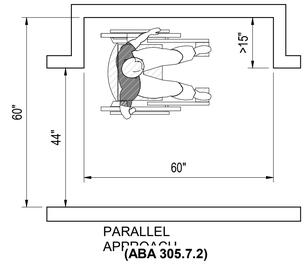

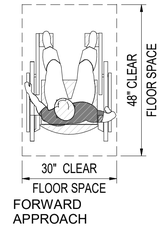

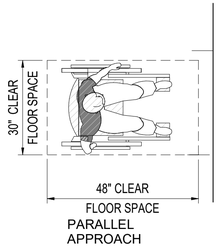

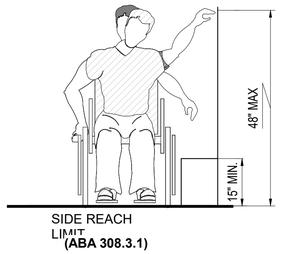

F6A-0.6 / A-0.6 ABA - APPROACH AND REACH

SCALE: 1/2" = 1'-0"

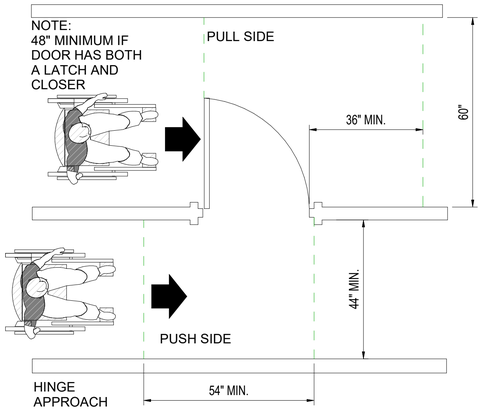

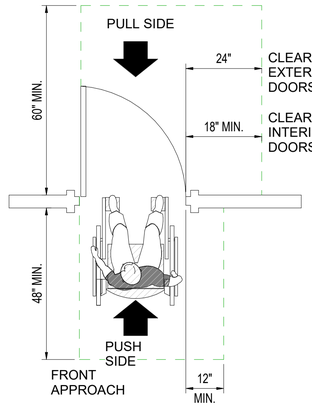

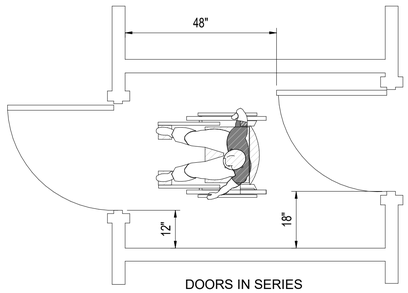

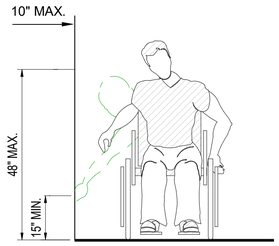

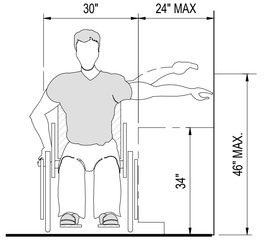

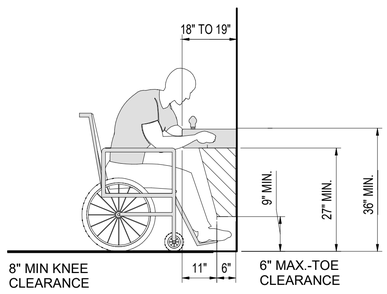

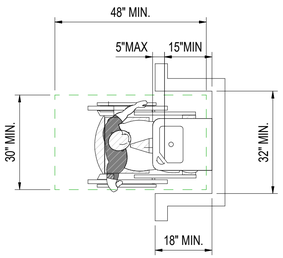

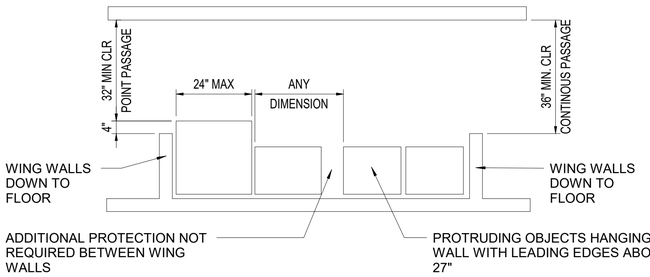

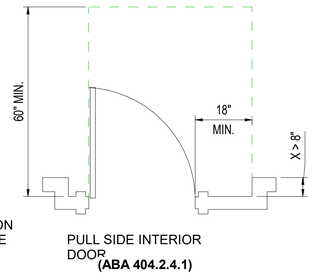

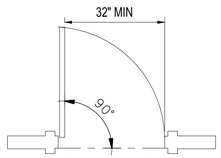

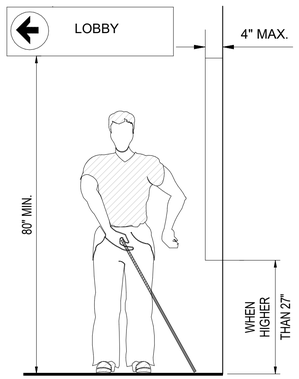

A1A-0.6 / A-0.6 ABA - FRONT APPROACH & SIDE CLEARANCES

SCALE: 1/2" = 1'-0"

1/2" = 1'-0" 0 1' 2' 4' 6'

NO.	DATE	DRAWN	REVISIONS -	CHK'D	APP'D
A	3/20/25	-	30 % CONCEPT DESIGN		
B	4/25/25	-	FINAL CONCEPT DESIGN		
C	7/18/25	-	40 % DESIGN		
D	9/19/25	-	80% DESIGN		

NOT FOR CONSTRUCTION

80% DESIGN

Jacobs
2600 MICHELSON DRIVE, SUITE 500
IRVINE, CA 92612
T: (949) 224-7500
F: (949) 224-7501

LICENSED ARCHITECT — BRADLEY D. WINSTEAD — C-34299 — 02/28/2027 — STATE OF CALIFORNIA

SCALE:	AS SHOWN
DRAWN:	A. TERMYNA
CHECKED:	D. WINSTEAD
DESIGNED:	R. SMITH
	ENGINEER / ARCHITECT

TERMINAL ISLAND MARITIME SUPPORT FACILITY

ADA STANDARDS

THE PORT OF LOS ANGELES
ENGINEERING DIVISION
425 S. PALOS VERDES STREET SAN PEDRO CA 90731-3309

DRAWING NUMBER	SHEET NUMBER
1-3513	A-0.6

RVT: Autodesk Docs://15 CA_03377991_POLA TIMSFT-1-3513-JEG-12-A_WashRoom_R25.rvt
DATE: 9/19/2025 5:14:29 PM

CITY OF LOS ANGELES:
DEPT. OF BUILDING & SAFETY - ENGINEERING BUREAU
GENERAL NOTES FOR COMMERCIAL ACCESSIBILITY P/BC 2020-143

SIGNS RELATED TO TOILETS AND BATHING FACILITIES

20. ENTRANCES LEADING TO TOILET ROOMS AND BATHING ROOMS COMPLYING WITH 11B-603 TOILET AND BATHING ROOMS SHALL BE IDENTIFIED BY A GEOMETRIC SYMBOL COMPLYING WITH 11B-703.7.2.6 TOILET AND BATHING ROOM GEOMETRIC SYMBOLS. WHERE EXISTING TOILET ROOMS OR BATHING ROOMS DO NOT COMPLY WITH 11B-603 TOILET AND BATHING ROOMS, DIRECTIONAL SIGNS INDICATING THE LOCATION OF THE NEAREST COMPLIANT TOILET ROOM OR BATHING ROOM WITHIN THE FACILITY SHALL BE PROVIDED. SIGNS SHALL COMPLY WITH 11B-703.5 VISUAL CHARACTERS AND SHALL INCLUDE THE INTERNATIONAL SYMBOL OF ACCESSIBILITY COMPLYING WITH 11B-703.7.2.1 ISA. WHERE EXISTING TOILET ROOMS OR BATHING ROOMS DO NOT COMPLY WITH 11B-603 TOILET AND BATHING ROOMS, THE TOILET ROOMS OR BATHING ROOMS COMPLYING WITH 11B-603 TOILET AND BATHING ROOMS SHALL BE IDENTIFIED BY THE INTERNATIONAL SYMBOL OF ACCESSIBILITY COMPLYING WITH 11B-703.7.2.1 ISA. WHERE CLUSTERED SINGLE USER TOILET ROOMS OR BATHING FACILITIES ARE PERMITTED TO USE EXCEPTIONS TO 11B-213.2 TOILET AND BATHING ROOMS, TOILET ROOMS OR BATHING FACILITIES COMPLYING WITH 11B-603 TOILET AND BATHING ROOMS SHALL BE IDENTIFIED BY THE INTERNATIONAL SYMBOL OF ACCESSIBILITY COMPLYING WITH 11B-703.7.2.1 ISA UNLESS ALL TOILET ROOMS AND BATHING FACILITIES COMPLY WITH 11B 603 TOILET AND BATHING ROOMS. EXISTING BUILDINGS THAT HAVE BEEN REMODELED TO PROVIDE SPECIFIC TOILET ROOMS OR BATHING ROOMS FOR PUBLIC USE THAT COMPLY WITH THESE BUILDING STANDARDS SHALL HAVE THE LOCATION OF AND THE DIRECTIONS TO THESE ROOMS POSTED IN OR NEAR THE BUILDING LOBBY OR ENTRANCE ON A SIGN COMPLYING WITH 11B 703.5 VISUAL CHARACTERS, INCLUDING THE INTERNATIONAL SYMBOL OF ACCESSIBILITY COMPLYING WITH 11B-703.7.2.1 ISA. §11B-216.8

21. PICTOGRAMS SHALL COMPLY WITH THE FOLLOWING:

a. PICTOGRAMS SHALL HAVE A FIELD HEIGHT OF 6 INCHES MINIMUM. CHARACTERS AND BRAILLE SHALL NOT BE LOCATED IN THE PICTOGRAM FIELD. §11B-703.6.1

b. PICTOGRAMS AND THEIR FIELD SHALL HAVE A NON-GLARE FINISH. PICTOGRAMS SHALL CONTRAST WITH THEIR FIELD WITH EITHER A LIGHT PICTOGRAM ON A DARK FIELD OR A DARK PICTOGRAM ON A LIGHT FIELD. §11B-703.6.2

c. PICTOGRAMS SHALL HAVE TEXT DESCRIPTORS LOCATED DIRECTLY BELOW THE PICTOGRAM FIELD. TEXT DESCRIPTORS SHALL COMPLY WITH 11B-703.2 RAISED CHARACTERS, 11B-703.3 BRAILLE AND 11B-703.4 INSTALLATION HEIGHT AND LOCATION. §11B-703.6.3

d. THE INSTALLATION HEIGHT AND LOCATION OF PICTOGRAM SIGNS SHALL BE PER §11B-703.4.1.

22. SYMBOLS SHALL COMPLY WITH THE FOLLOWING:

a. DOORWAYS LEADING TO TOILET ROOMS AND BATHING ROOMS SHALL BE IDENTIFIED BY A GEOMETRIC SYMBOL COMPLYING WITH 11B-703.7.2.6 TOILET AND BATHING FACILITIES GEOMETRIC SYMBOLS. THE SYMBOL SHALL BE MOUNTED AT 58 INCHES MINIMUM AND 60 INCHES MAXIMUM ABOVE THE FINISH FLOOR OR GROUND SURFACE MEASURED FROM THE CENTERLINE OF THE SYMBOL. WHERE A DOOR IS PROVIDED, THE SYMBOL SHALL BE MOUNTED WITHIN 1 INCH OF THE VERTICAL CENTERLINE OF THE DOOR. §11B-703.7.2.6 (SEE EXCEPTION)

b. A TRIANGLE SYMBOL SHALL BE LOCATED AT ENTRANCES TO MEN'S TOILET AND BATHING FACILITIES AND IT SHALL BE IDENTIFIED BY AN EQUILATERAL TRIANGLE, 1/4 INCH THICK WITH EDGES 12 INCHES LONG AND A VERTEX POINTING UPWARD. THE TRIANGLE SYMBOL SHALL CONTRAST WITH THE DOOR, EITHER LIGHT ON A DARK BACKGROUND OR DARK ON A LIGHT BACKGROUND. §11B-703.7.2.6.1

c. A CIRCLE SYMBOL SHALL BE LOCATED AT ENTRANCES TO WOMEN'S TOILET AND BATHING FACILITIES AND IT SHALL BE IDENTIFIED BY A CIRCLE, ¼ INCH THICK AND 12 INCHES IN DIAMETER. THE CIRCLE SYMBOL SHALL CONTRAST WITH THE DOOR, EITHER LIGHT ON A DARK BACKGROUND OR DARK ON A LIGHT BACKGROUND. §11B-703.7.2.6.2

d. A COMBINED CIRCLE AND TRIANGLE SYMBOL SHALL BE LOCATED AT ENTRANCES TO UNISEX TOILET AND BATHING FACI

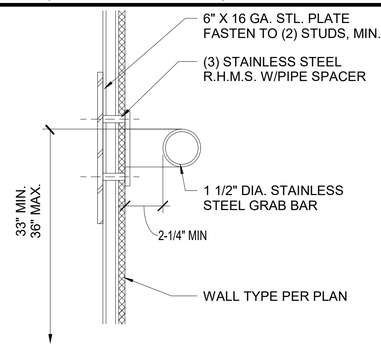

B1A-0.7 / A-0.7 — ABA - GRAB BAR MOUNTING DETAIL
SCALE: 1/2" = 1'-0"

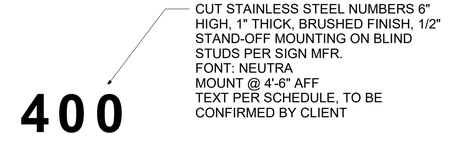

2A-0.7 / A-0.7 — SIGN TYPE F
SCALE: 3" = 1'-0"

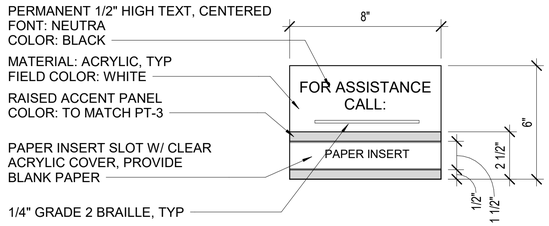

3A-0.7 / A-0.7 — SIGN TYPE H
SCALE: 3" = 1'-0"

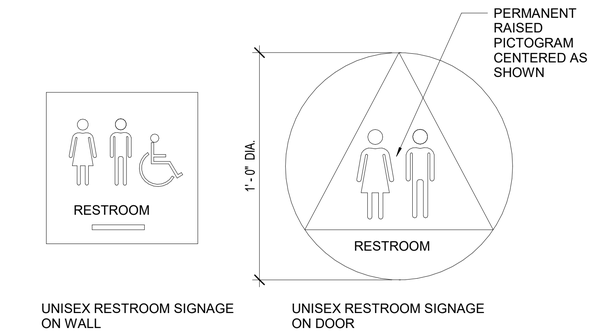

4A-0.7 / A-0.7 — SIGN TYPE R
SCALE: 3" = 1'-0"

NOTE: ADJUST SIGN LENGTH TO FIT ROOM NAME TEXT AS NEEDED, MAX 12" WIDE AND THEN EXTEND SIGN HEIGHT TO ACCOMMODATE A SECOND LINE OF ROOM NAME TEXT.

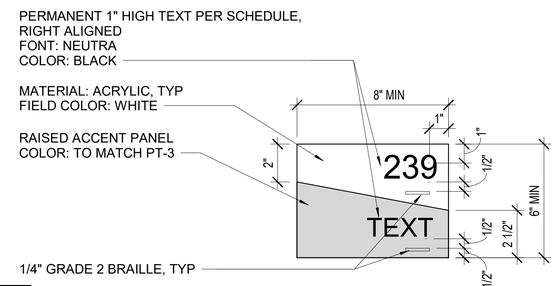

1A-0.7 / A-0.7 — SIGN TYPE A
SCALE: 3" = 1'-0"

GENERAL SHEET NOTES

1. INSTALL EXTERIOR SIGNAGE WITH WEATHERPROOF CONSTRUCTION ADHESIVE, UNLESS NOTED OTHERWISE.
2. SEE SHEET A-0.6 FOR MOUNTING HEIGHTS
3. SEE SHEET A-X.X FINISH LEGEND FOR PT COLOR INFO.

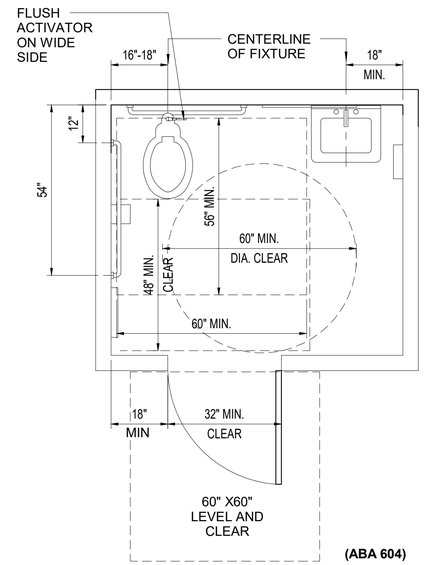

(ABA 604)

C1A-0.7 / A-0.7 — ABA - SINGLE ACCOMMODATION TOILETS
SCALE: 1/2" = 1'-0"

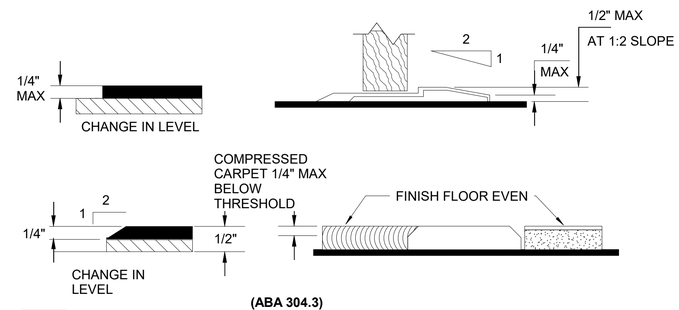

(ABA 304.3)

A1A-0.7 / A-0.7 — ABA - CHANGE IN LEVEL
SCALE: 1/2" = 1'-0"

NO.	DATE	DRAWN	REVISIONS -	CHK'D	APP'D
A	3/20/25	-	30 % CONCEPT DESIGN		
B	4/25/25	-	FINAL CONCEPT DESIGN		
C	7/18/25	-	40 % DESIGN		
D	9/19/25	-	80% DESIGN		

NOT FOR CONSTRUCTION

NO.	DATE	DRAWN	REVISIONS -	CHK'D	APP'D
			80% DESIGN		

Jacobs
2600 MICHELSON DRIVE, SUITE 500
IRVINE, CA 92612
T: (949) 224-7500
F: (949) 224-7501

LICENSED ARCHITECT — REGISTERED PROFESSIONAL ENGINEER — C 24239 — 02/28/ — RENEWAL 2026 — STATE OF CALIFORNIA

SCALE:	AS SHOWN
DRAWN:	A. TERMYNA
CHECKED:	D. WINSTEAD
DESIGNED:	R. SMITH
	ENGINEER / ARCHITECT

TERMINAL ISLAND MARITIME SUPPORT FACILITY

ADA STANDARDS

THE PORT OF LOS ANGELES
ENGINEERING DIVISION
425 S. PALOS VERDES STREET SAN PEDRO CA 90731-3309

DRAWING NUMBER	SHEET NUMBER
1-3513	A-0.7

RVT: Autodesk Docs://US CA_23377901_POLA TIMSFI-3513-xES-12A_WashRoom_R25.rvt
DATE: 9/19/2025 2:14:29 PM

PASSENGER DROP-OFF AND LOADING ZONES

General. Passenger drop-off and loading zones shall comply with Section 11B-503.

Vehicle pull-up space. Passenger drop-off and loading zones shall provide a vehicular pull-up space 96 inches wide minimum and 20 feet long minimum.

Access aisle. Passenger drop-off and loading zones shall provide access aisles complying with Section 11B-503 adjacent and parallel to the vehicle pull-up space. Access aisles shall adjoin an accessible route and shall not overlap the vehicular way.

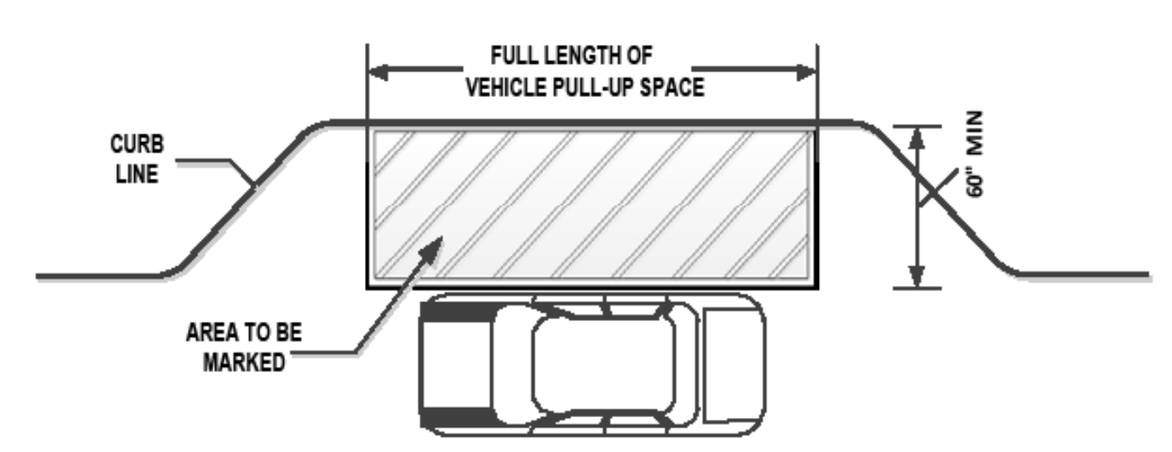

FIGURE 11B-503.3
PASSENGER DROP-OFF AND LOADING ZONE ACCESS AISLE

Width. Access aisles serving vehicle pull-up spaces shall be 60 inches wide minimum.

Length. Access aisles shall extend the full length of the vehicle pull-up spaces they serve.

Marking. Access aisles shall be marked with a painted borderline around their perimeter. The area within the borderlines shall be marked with hatched lines a maximum of 36 inches on center in a color contrasting with that of the aisle surface.

Floor and ground surfaces. Vehicle pull-up spaces and access aisles serving them shall comply with Section 11B-302. Access aisles shall be at the same level as the vehicle pull-up space they serve. Changes in level are not permitted.
Exception: Slopes not steeper than 1:48 shall be permitted.

Vertical clearance. Vehicle pull-up spaces, access aisles serving them, and a vehicular route from an entrance to the passenger loading zone and from the passenger loading zone to a vehicular exit shall provide a vertical clearance of 114 inches minimum.

Identification. Each passenger loading zone designated for persons with disabilities shall be identified with a reflectorized sign complying with Section 11B-703.5. It shall be permanently posted immediately adjacent to and visible from the passenger loading zone stating "Passenger Loading Zone Only" and including the International Symbol of Accessibility complying with Section 11B-703.7.2.1 in white on a dark blue background.

Medical care and long-term care facilities. At least one passenger loading zone complying with Section 11B-503 shall be provided at an accessible entrance to licensed medical care and licensed long-term care facilities where the period of stay may exceed twenty-four hours.

Valet parking. Parking facilities that provide valet parking services shall provide at least one passenger loading zone complying with Section 11B-503. The parking requirements of Section 11B-208.1 apply to facilities with valet parking.

Mechanical access parking garages. Mechanical access parking garages shall provide at least one passenger loading zone complying with Section 11B-503 at vehicle drop-off and vehicle pick-up areas.

PARKING SPACES

General. Car and van parking spaces shall comply with Section 11B-502. Where parking spaces are marked with lines, width measurements of parking spaces and access aisles shall be made from the centerline of the markings.
Exception: Where parking spaces or access aisles are not adjacent to another parking space or access aisle, measurements shall be permitted to include the full width of the line defining the parking space or access aisle.

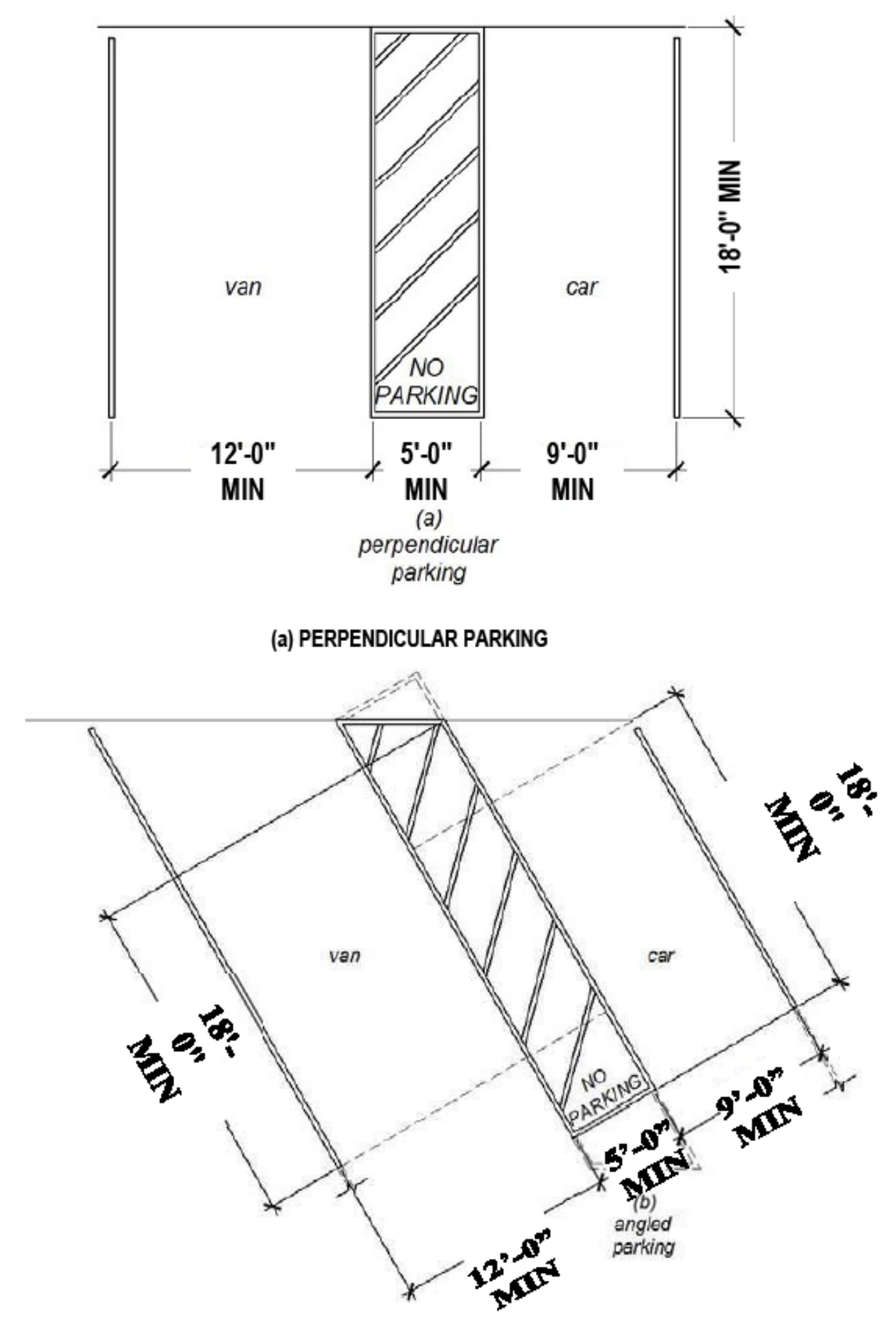

FIGURE 11B-502.2 VEHICLE PARKING SPACES

As a covered entity under Title II of the Americans with Disabilities Act, the City of Los Angeles does not discriminate on the basis of disability and, upon request, will provide reasonable accommodation to ensure equal access to its programs, services and activities.

Vehicle spaces. Car and van parking spaces shall be 216 inches (18 feet) long minimum. Car parking spaces shall be 108 inches (9 feet) wide minimum and van parking spaces shall be 144 inches (12 feet) wide minimum, shall be marked to define the width, and shall have an adjacent access aisle complying with Section 11B-502.3.
Exception: Van parking spaces shall be permitted to be 108 inches (9 feet) wide minimum where the access aisle is 96 inches (8 feet) wide minimum.

Access aisle. Access aisles serving parking spaces shall comply with Section 11B-502.3. Access aisles shall adjoin an accessible route. Two parking spaces shall be permitted to share a common access aisle.

Width. Access aisles serving car and van parking spaces shall be 60 inches (5 feet) wide minimum.

Length. Access aisles shall extend the full required length of the parking spaces they serve.

Marking. Access aisles shall be marked with a blue painted borderline around their perimeter. The area within the blue borderlines shall be marked with hatched lines a maximum of 36 inches (3 feet) on center in a color contrasting with that of the aisle surface, preferably blue or white. The words "NO PARKING" shall be painted on the surface within each access aisle in white letters a minimum of 12 inches (1 foot) in height and located to be visible from the adjacent vehicular way. Access aisle markings may extend beyond the minimum required length.

Location. Access aisles shall not overlap the vehicular way. Access aisles shall be permitted to be placed on either side of the parking space except for van parking spaces which shall have access aisles located on the passenger side of the parking spaces.

Floor or ground surfaces. Parking spaces and access aisles serving them shall comply with Section 11B- 302. Access aisles shall be at the same level as the parking spaces they serve. Changes in level are not permitted.
Exception: Slopes not steeper than 1:48 shall be permitted.

Vertical clearance. Parking spaces, access aisles and vehicular routes serving them shall provide a vertical clearance of 98 inches (2489 mm) minimum.
Vertical clearance. Parking spaces, access aisles and vehicular routes serving them shall provide a vertical clearance of 98 inches (2489 mm) minimum.
Exception: In existing multistory parking facilities, car parking spaces, access aisles and vehicular routes serving them shall provide a vertical clearance of 80 inches (2032 mm) minimum. Existing vertical clearance in excess of 80 inches (2032 mm) and less than 98 inches (2489 mm) shall be maintained. This exception shall not apply to van parking spaces, access aisles, or vehicular routes serving them.

Identification. Parking space identification signs shall include the International Symbol of Accessibility complying with Section 11B-703.7.2.1. Signs identifying van parking spaces shall contain additional language or an additional sign with the designation "van accessible." Signs shall be 60 inches (5 feet) minimum above the finish floor or ground surface measured to the bottom of the sign.
Exception: Signs located within an accessible route shall be a minimum of 80 inches (6 feet, 8 inches) above the finish floor or ground surface measured to the bottom of the sign.

Finish and size. Parking identification signs shall be reflectorized with a minimum area of 70 square inches.

Minimum fine. Additional language or an additional sign below the International Symbol of Accessibility shall state "Minimum Fine $250."

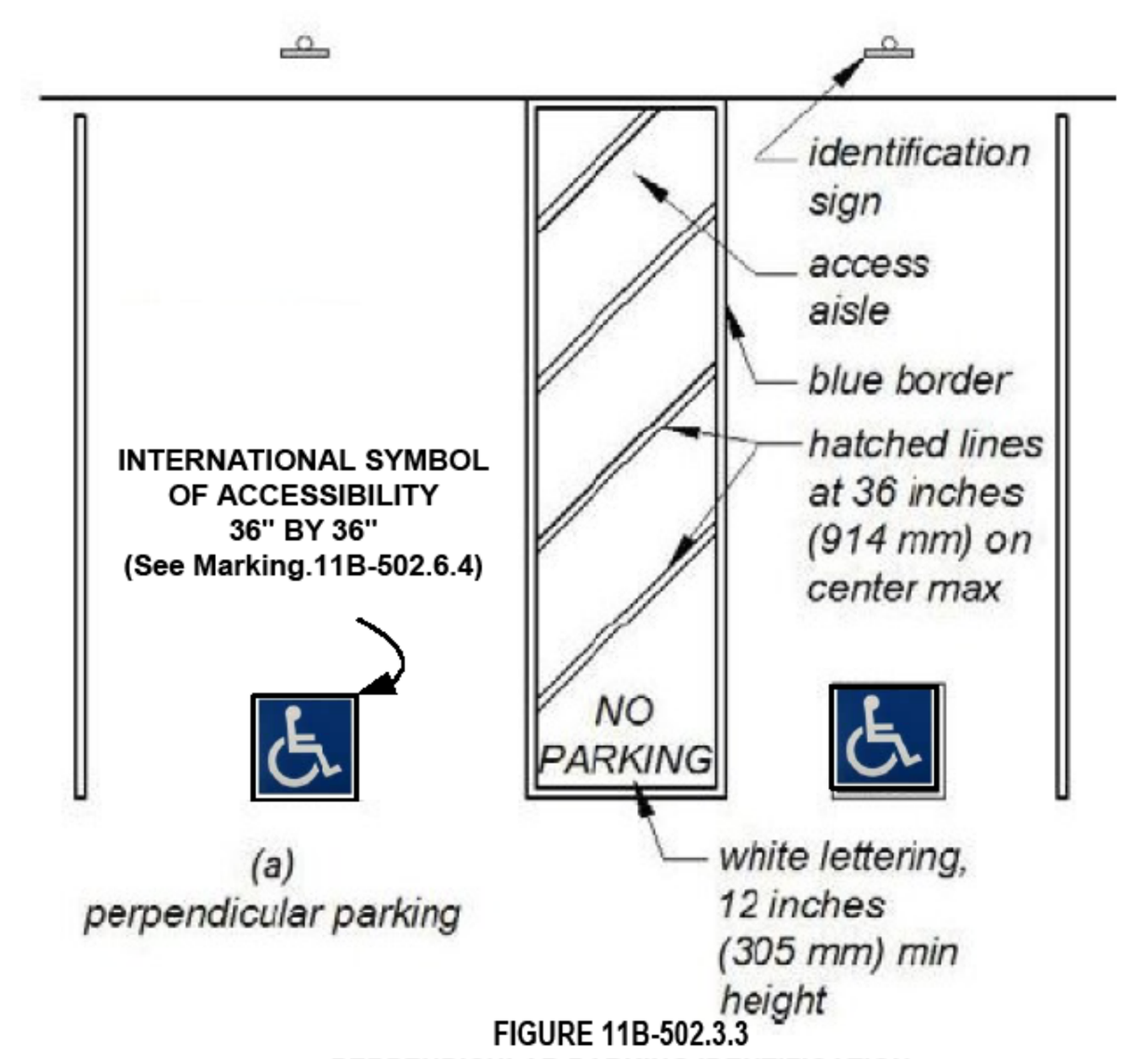

FIGURE 11B-502.3.3
PERPENDICULAR PARKING IDENTIFICATION

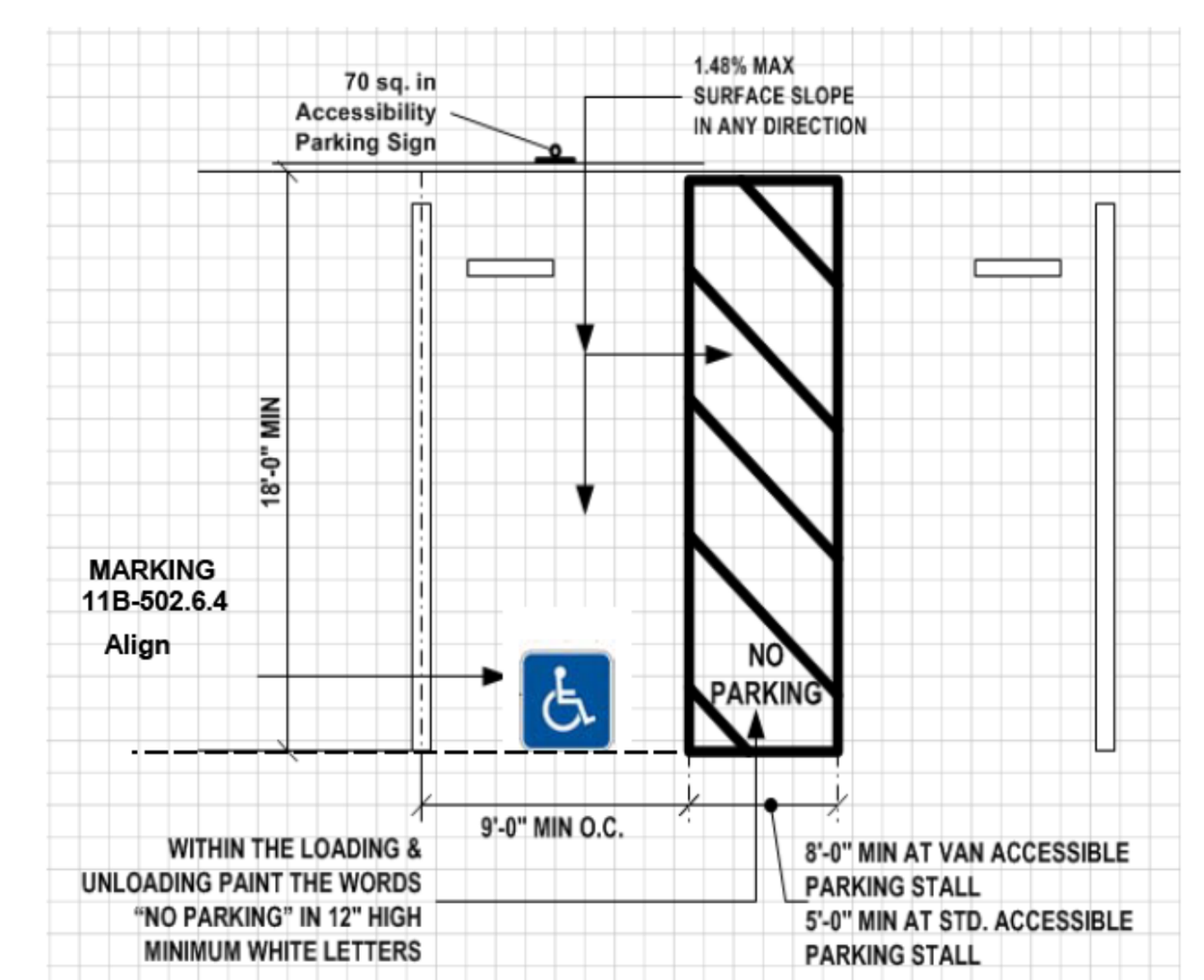

VAN PARKING SPACES SHALL BE PERMITTED TO BE 108 INCHES (9 FEET) WIDE MINIMUM WHERE THE ACCESS AISLE IS 96 INCHES (8 FEET) WIDE MINIMUM.

As a covered entity under Title II of the Americans with Disabilities Act, the City of Los Angeles does not discriminate on the basis of disability and, upon request, will provide reasonable accommodation to ensure equal access to its programs, services and activities.

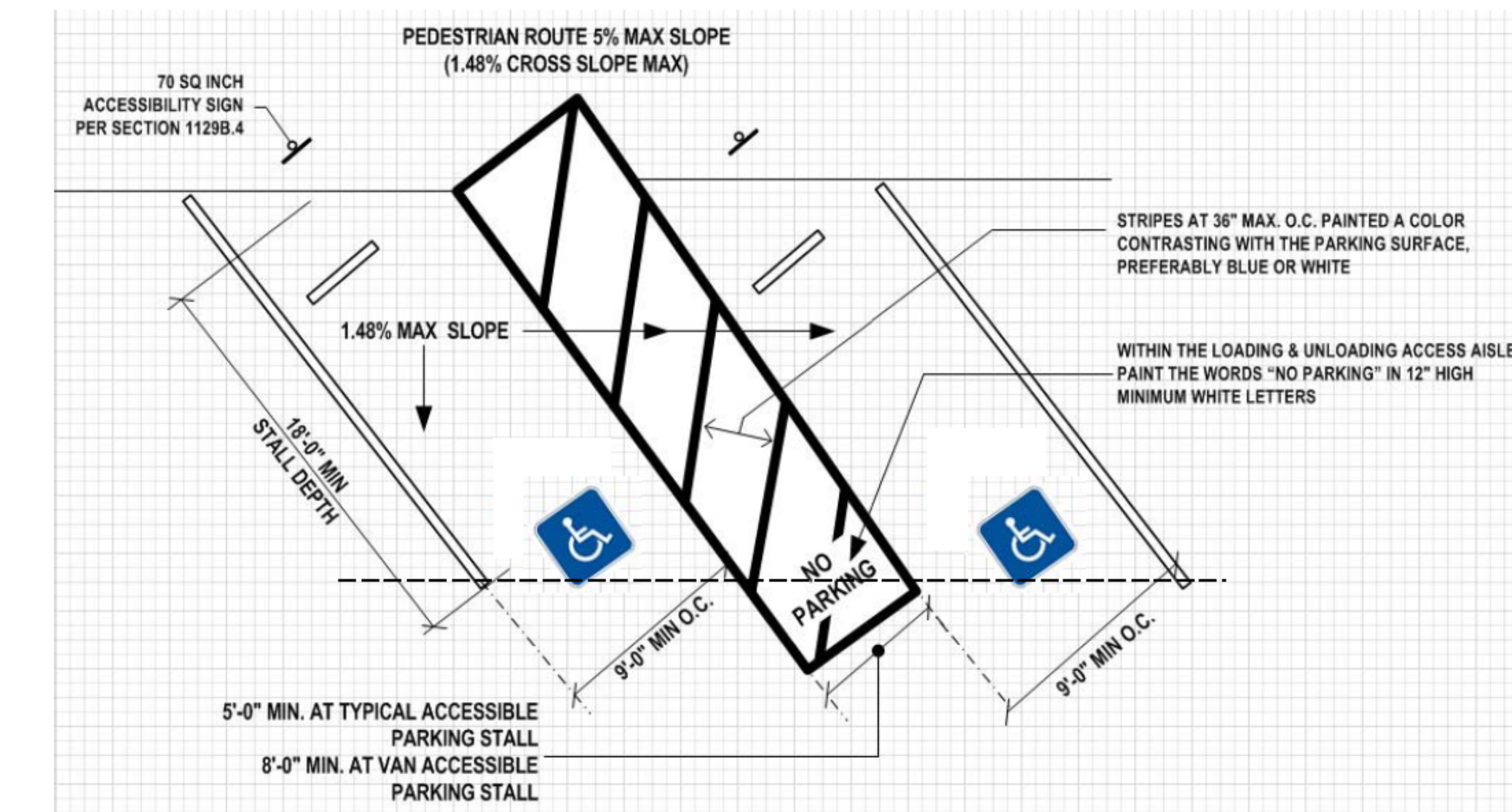

FIGURE 11B-502.3.3
ANGLED PARKING IDENTIFICATION

Location. A parking space identification sign shall be visible from each parking space. Signs shall be permanently posted either immediately adjacent to the parking space or within the projected parking space width at the head end of the parking space. Signs may also be permanently posted on a wall at the interior end of the parking space.

Marking. Each accessible car and van space shall have surface identification complying with either Sections 11B-502.6.4.1 or 11B-502.6.4.2.

The parking space shall be marked with an International Symbol of Accessibility complying with Section 11B-703.7.2.1 in white on a blue background a minimum 36 inches wide by 36 inches high. The centerline of the International Symbol of Accessibility shall be a maximum of 6 inches from the centerline of the parking space, its sides parallel to the length of the parking space and its lower corner at, or lower side aligned with, the end of the parking space length.

The parking space shall be outlined or painted blue and shall be marked with an International Symbol of Accessibility complying with Section 11B-703.7.2.1 a minimum 36 inches wide by 36 inches high in white or a suitable contrasting color. The centerline of the International Symbol of Accessibility shall be a maximum of 6 inches from the centerline of the parking space, its sides parallel to the length of the parking space and its lower corner at, or lower side aligned with, the end of the parking space.

Relationship to accessible routes. Parking spaces and access aisles shall be designed so that cars and vans, when parked, cannot obstruct the required clear width of adjacent accessible routes.

11B-502.7.1 Arrangement. Parking spaces and access aisles shall be designed so that persons using them are not required to travel behind parking spaces other than to pass behind the parking space in which they parked.

11B-502.7.2 Wheel stops. A curb or wheel stop shall be provided if required to prevent encroachment of vehicles over the required clear width of adjacent accessible routes.

11B-502.8 Additional signage. An additional sign shall be posted either;

1) In a conspicuous place at each entrance to an off-street parking facility or
2) Immediately adjacent to on-site accessible parking and visible from each parking space.

11B-502.8.1 Size. The additional sign shall not be less than 17 inches wide by 22 inches high.

11B-502.8.2 Lettering. The additional sign shall clearly state in letters with a minimum height of 1 inch the following:
"Unauthorized vehicles parked in designated accessible spaces not displaying distinguishing placards or special license plates issued for persons with disabilities will be towed away at the owner's expense. Towed vehicles maybe reclaimed at: __________ or by telephoning __________."
Blank spaces shall be filled in with appropriate information as a permanent part of the sign. (NOTE: **Towing Co.'s Name** and **Telephone Number** must be noted on the detail sheet/s on the plans).

As a covered entity under Title II of the Americans with Disabilities Act, the City of Los Angeles does not discriminate on the basis of disability and, upon request, will provide reasonable accommodation to ensure equal access to its programs, services and activities.

ACCESSIBLE PARKING SIGN INSTALLED AT EACH SPACE



As a covered entity under Title II of the Americans with Disabilities Act, the City of Los Angeles does not discriminate on the basis of disability and, upon request, will provide reasonable accommodation to ensure equal access to its programs, services and activities.

Electrical Vehicle Charging Stations

Electric vehicle charging stations (EVCS) shall comply with Section 11B-812 as required by Section 11B-228.3. Where vehicle spaces and access aisles are marked with lines, measurements shall be made from the centerline of the markings.

Exception: 11B-812.1

Operable parts shall comply with Section 11B-309.

Future installation of Electric Vehicle (EV) Chargers serving Covered MultiFamily Dwellings shall be on accessible route per 1113A and shall be in compliance with section 1138A reach range requirements

Floor or ground surfaces. Vehicle spaces and access aisles serving them shall comply with Section 11B-302. Access aisles shall be at the same level as the vehicle space they serve. Changes in level, slopes exceeding 1:48, and detectable warnings shall not be permitted in vehicle spaces and access aisles.

Vertical clearance. Vehicle spaces, access aisles serving them, and vehicular routes serving them shall provide a vertical clearance of 98 inches (2489 mm) minimum. Where provided, overhead cable management systems shall not obstruct required vertical clearance.

Accessible route to building or facility.
EVCS complying with Section 11B-812 that serve a particular building or facility shall be located on an accessible route to an entrance complying with Section 11B-206.4. Where EVCS do not serve a particular building or facility, EVCS complying with Section 11B-812 shall be located on an accessible route to an accessible pedestrian entrance of the EV charging facility.

Exception: 11B-812.5.1

Accessible route to EV charger. An accessible route complying with Section 11B-402 shall be provided between the vehicle space and the EV charger which serves it.

Relationship to accessible routes. Vehicle spaces and access aisles shall be designed so that when the vehicle space is occupied the required clear width of adjacent accessible routes is not obstructed. A curb, wheel stop, bollards, or other barrier shall be provided if required to prevent encroachment of vehicles over the required clear width of adjacent accessible routes.

Arrangement. Vehicle spaces and access aisles shall be designed so that persons using them are not required to travel behind vehicle spaces or parking spaces other than the vehicle space in which their vehicle has been left to charge.
Exceptions: 11B-812.5.4

Obstructions. EVCS shall be designed so accessible routes are not obstructed by cables or other elements.

Vehicle spaces. Vehicle spaces serving van accessible, standard accessible, ambulatory and drive-up EVCS shall be 216 inches (5486 mm) long minimum and shall com ply with Sections 11B-812.6.1 through 11B-812.6.4 as applicable. All vehicle spaces shall be marked to define their width.

Exceptions: 11B-812.6

Van accessible. Vehicle spaces serving van accessible EVCS shall be 144 inches (3658 mm) wide minimum and shall have an adjacent access aisle complying with Section 11B-812.7.

Standard accessible. Vehicle spaces serving standard accessible EVCS shall be 108 inches (2743 mm) wide minimum and shall have an adjacent access aisle complying with Section 11B-812.7.

Ambulatory. Vehicle spaces serving ambulatory EVCS shall be 120 inches (3048 mm) wide minimum and shall not be required to have an adjacent access aisle.
Drive-up. Vehicle spaces serving drive-up EVCS shall be 204 inches (5182 mm) wide minimum and shall not be required to have an adjacent access aisle.

Access aisle. Access aisles shall adjoin an accessible route. Two vehicle spaces shall be permitted to share a common access aisle. Access aisles shall be 60 inches (1524 mm) wide minimum and shall extend the full required length of the vehicle spaces they serve.

Location. Access aisles at vehicle spaces shall not overlap the vehicular way and may be placed on either side of the vehicle space they serve except for van accessible spaces which shall have access aisles located on the passenger side of the vehicle spaces.

Marking. Access aisles at vehicle spaces shall be marked with a painted borderline around their perimeter. The area within the borderlines shall be marked with hatched lines a maximum of 36 inches (914 mm) on center. The color of the borderlines, hatched lines, and letters shall contrast with that of the surface of the access aisle. The blue color required for identification of access aisles for accessible parking shall not be used. Access aisle markings may extend beyond the minimum required length.

Lettering. The words "NO PARKING" shall be painted on the surface within each access aisle in letters a minimum of 12 inches (305 mm) in height and located to be visible from the adjacent vehicular way.

Identification signs. EVCS identification signs shall be provided in compliance with Section 11B-812.8.

Four or fewer. Where four or fewer total EVCS are provided, identification with an International Symbol of Accessibility (ISA) shall not be required.

Five to twenty-five. Where five to twenty-five total EVCS are provided, one van accessible EVCS shall be identified by an ISA complying with Section 11B-703.7.2.1. The required standard accessible EVCS shall not be required to be identified with an ISA.

Twenty-six or more. Where twenty-six or more total EVCS are provided, all required van accessible and all required standard accessible EVCS shall be identified by an ISA complying with Section 11B-703.7.2.1.

Ambulatory. Ambulatory EVCS shall not be required to be identified by an ISA.

Drive-up. Drive-up EVCS shall not be required to be identified by an ISA.

Finish and size. Identification signs shall be reflectorized with a minimum area of 70 square inches (45 161 mm2).

Location. Required identification signs shall be visible from the EVCS it serves. Signs shall be permanently posted either immediately adjacent to the vehicle space or within the projected vehicle space width at the head end of the vehicle space. Signs identifying van accessible vehicle spaces shall contain the designation "van accessible." Signs shall be 60 inches (1525 mm) minimum above the finish floor or ground surface measured to the bottom of the sign. Signs located within an accessible route shall be 80 inches (2032 mm) minimum above the finish floor or ground surface measured to the bottom of the sign. Signs may also be permanently posted on a wall at the interior end of the vehicle space.

Surface marking. EVCS vehicle spaces shall provide surface marking stating "EV CHARGING ONLY" in letters 12 inches (305 mm) high minimum. The centerline of the text shall be a maximum of 6 inches (152 mm) from the centerline of the vehicle space and its lower corner at, or lower side aligned with, the end of the parking space length.

As covered entity under Title II of the Americans with Disabilities Act, the City of Los Angeles does not discriminate on the basis of disability and, upon request, will provide reasonable accommodation to ensure equal access to its programs, services and activities.

Electric vehicle chargers
EV chargers shall comply with Section 11B-812.10.*Operable parts and charging cord storage shall comply with Section 11B-309.*

Point-of-sale devices. Where provided, point-of-sale devices shall comply with Sections 11B-707.2, 11B-707.3, 11B-707.7.2, and 11B-07.9.

Location. EV chargers shall be adjacent to, and within the projected width of, the vehicle space being served.

Exceptions:11B-812.10.4

TABLE 11B-228.3.2.1
ELECTRIC VEHICLE CHARGING STATIONS FOR PUBLIC USE AND COMMON USE

TOTAL NUMBER OF EVCS AT A FACILITY[1]	MINIMUM NUMBER (by type) OF EVCS REQUIRED TO COMPLY WITH SECTION 11B-812[1]		
	Van Accessible	Standard Accessible	Ambulatory
1 to 4	1	0	0
5 to 25	1	1	0
26 to 50	1	1	1
51 to 75	1	2	2
76 to 100	1	3	3
101 and over	1, plus 1 for each 300, or fraction thereof, over 100	3, plus 1 for each 60, or fraction thereof, over 100	3, plus 1 for each 50, or fraction thereof, over 100

1. Where an EV charger can simultaneously charge more than one vehicle, the number of EVCS provided shall be considered equivalent to the number of electric vehicles that can be simultaneously charged.

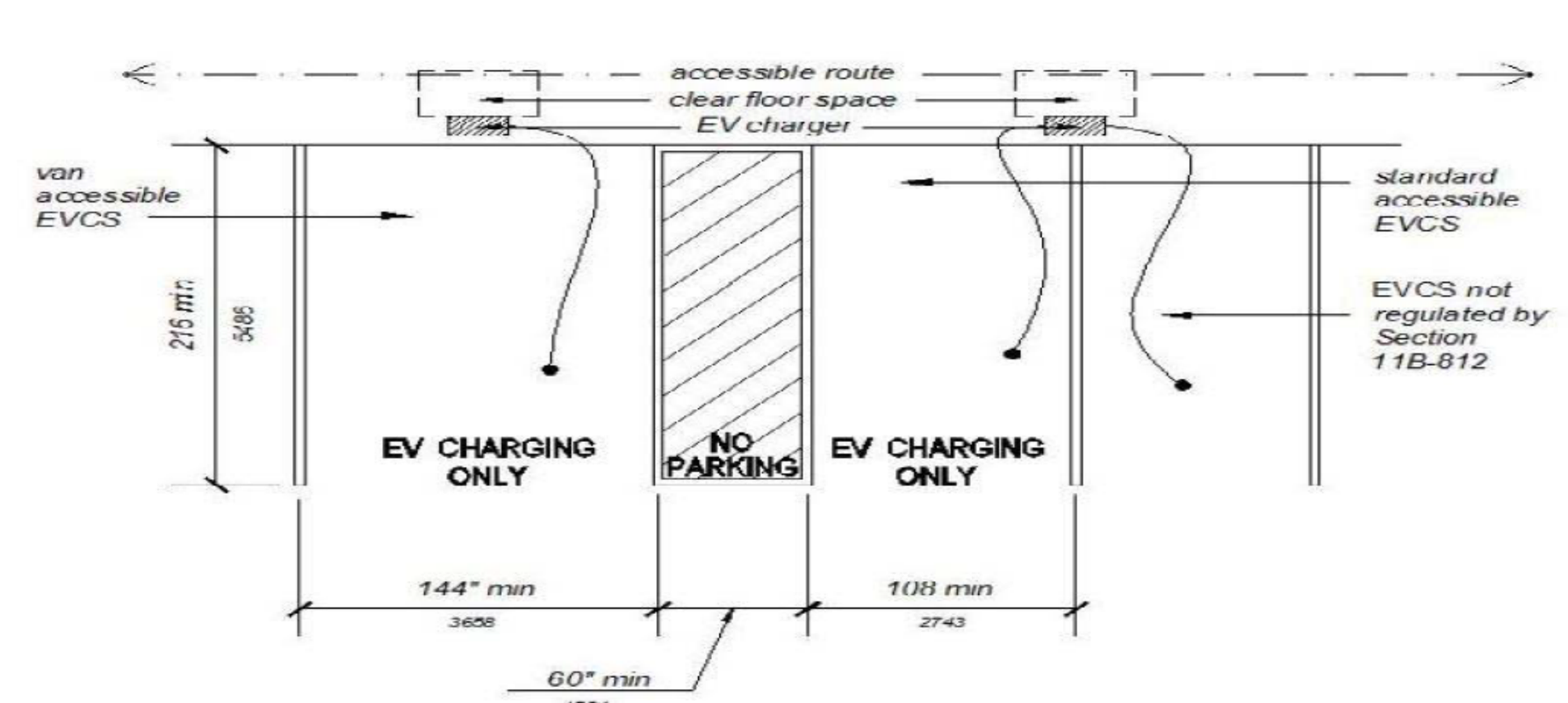

FIGURE 11B-812.9.
SURFACE MARKING

As a covered entity under Title II of the Americans with Disabilities Act, the City of Los Angeles does not discriminate on the basis of disability and, upon request, will provide reasonable accommodation to ensure equal access to its programs, services and activities.

INFORMATION BULLETIN / PUBLIC - BUILDING CODE
REFERENCE NO.: LABC Sec.11B-703 Effective: 01/01/2020
DOCUMENT NO.: **P/BC 2020-091** Revised:
Previously Issued As: P/BC 2017-091

ACCESSIBILITY DETAILS FOR SIGNS



The International Symbol of Accessibility shall comply with Figure 11B-703.7.2.1. The symbol shall consist of a white figure on a blue background. The blue shall be FS 15090 in Federal Standard 595C

FIGURE 11B-703.7.2.1
INTERNATIONAL SYMBOL OF ACCESSIBILITY
(ISA)

Volume control telephones. Telephones with a volume control shall be identified by a pictogram of a telephone handset with radiating sound waves on a square field such as show in Figure 11B-703.7.2.3



FIGURE 11B-703.7.2.3
VOLUME CONTROL TELEPHONE



11B-703.7.2.2 International Symbol of TTY. The International Symbol of TTY shall comply with Figure 11B-703.7.2.2

FIGURE 11B-703.7.2.2
INTERNATIONAL SYMBOL OF TTY

Assistive listening systems. Assistive listening systems shall be identified by the International Symbol of Access for Hearing Loss complying with Figure 11B-703.7.2.4



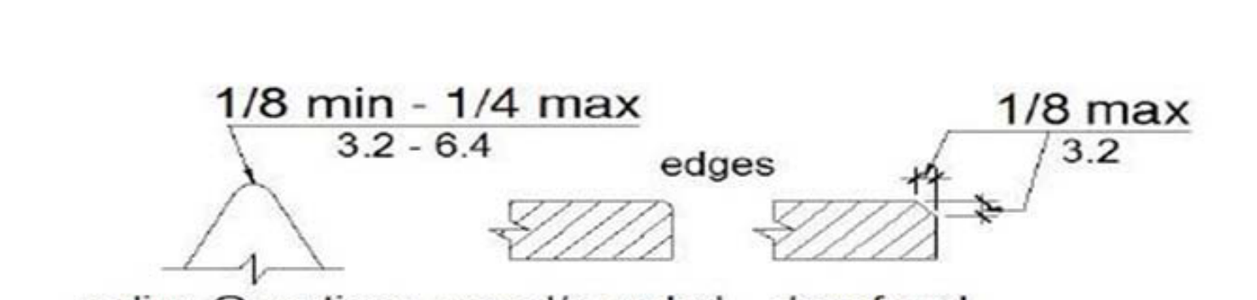

FIGURE 11B-703.7.2.6.4
EDGES AND VERTICES ON GEOMETRIC SYMBOLS

As a covered entity under Title II of the Americans with Disabilities Act, the City of Los Angeles does not discriminate on the basis of disability and, upon request, will provide reasonable accommodation to ensure equal access to its programs, services and activities.

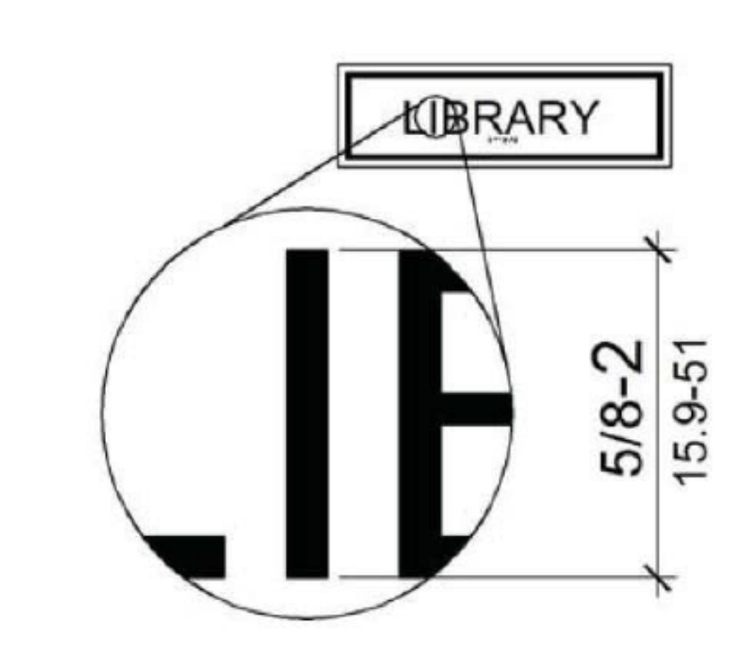

FIGURE 11B-703.2.5
HEIGHT OF RAISED CHARACTERS

11B-703 Signs

11B-703.1 General. Signs shall comply with Section 11B- 703. Where both visual and tactile characters are required, either one sign with both visual and tactile characters, or two separate signs, one with visual, and one with tactile characters, shall be provided.

11B-703.1.1 Plan review and inspection. Signs as specified in Section 11B-703, or in other sections of this code, when included in the construction of new buildings or facilities, or when included, altered or replaced due to additions, alterations or renovations to existing buildings or facilities, and when a permit is required, shall comply with Sections 11B-703.1.1.1 and 11B-703.1.1.2.

11B-703.1.1.1 Plan review. Plans, specifications or other information indicating compliance with these regulations shall be submitted to the enforcing agency for review and approval.

11B-703.1.1.2 Inspection. Signs and identification devices shall be field inspected after installation and approved by the enforcing agency prior to the issuance of a final certificate of occupancy per Chapter 1, Division II, Section 111, or final approval where no certificate of occupancy is issued. The inspection shall include, but not be limited to, verification that Braille dots and cells are properly spaced and the size, proportion and type of raised characters are in compliance with these regulations.

TABLE 11B-703.3.1
BRAILLE DIMENSIONS

MEASUREMENT RANGE	MINIMUM IN INCHES MAXIMUM IN INCHES
Dot base diameter	0.059 – 0.063
Distance between two dots in the same cell	0.100
Distance between corresponding dots in adjacent cells	0.300
Dot height	0.025 – 0.037
Distance between corresponding dots from one cell directly below	0.395 – 0.400

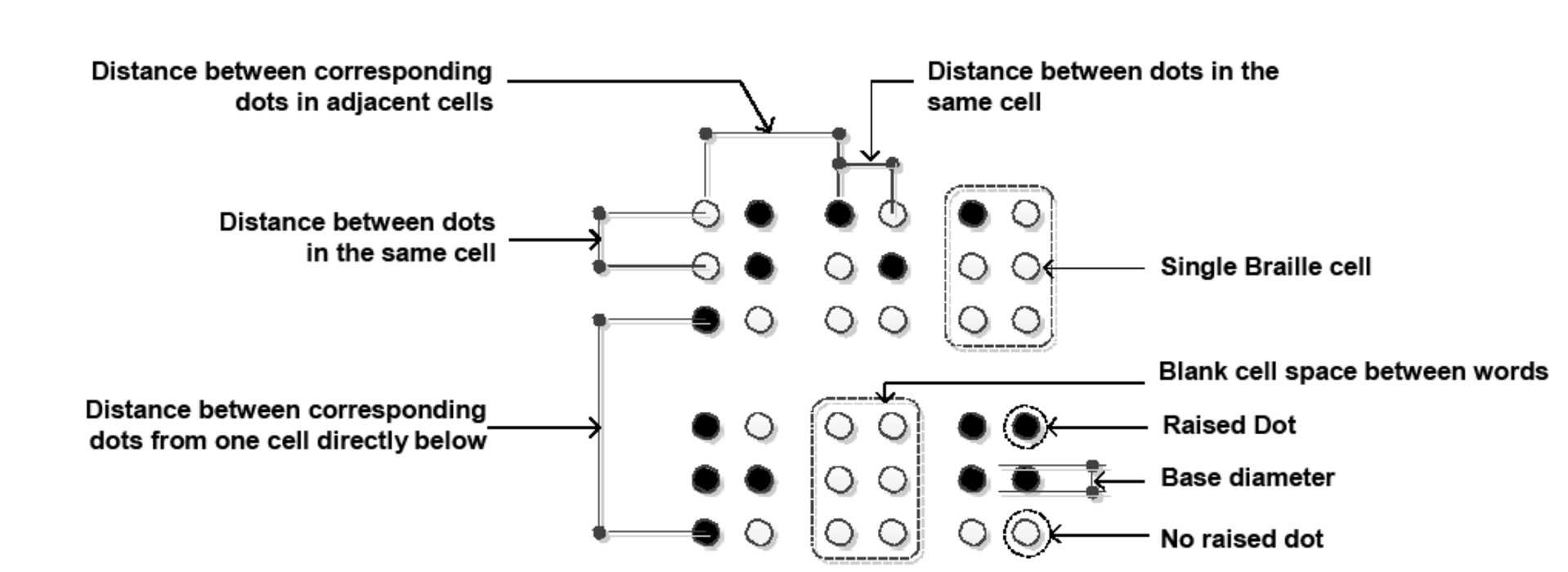

FIGURE 11B-703.3.1
BRAILLE MEASUREMENT

As a covered entity under Title II of the Americans with Disabilities Act, the City of Los Angeles does not discriminate on the basis of disability and, upon request, will provide reasonable accommodation to ensure equal access to its programs, services and activities.

NO.	DATE	DRAWN	REVISIONS -	CHK'D	APP'D
A	3/20/25	-	30 % CONCEPT DESIGN		
B	4/25/25	-	FINAL CONCEPT DESIGN		
C	7/18/25	-	40 % DESIGN		
D	9/19/25	-	80% DESIGN		

NOT FOR CONSTRUCTION

NO.	DATE	DRAWN	REVISIONS -	CHK'D	APP'D

80% DESIGN

Jacobs
2600 MICHELSON DRIVE, SUITE 500
IRVINE, CA 92612
T: (949) 224-7500
F: (949) 224-7501

LICENSED ARCHITECT ROBERT G SMITH C-34258 02/28/2027 RENEWAL DATE STATE OF CALIFORNIA

SCALE: AS SHOWN
DRAWN: A. TERMYNA
CHECKED: D. WINSTEAD
DESIGNED: R. SMITH
ENGINEER / ARCHITECT

TERMINAL ISLAND MARITIME SUPPORT FACILITY

ACCESSIBILITY DETAILS

THE PORT OF LOS ANGELES
ENGINEERING DIVISION
425 S. PALOS VERDES STREET SAN PEDRO CA 90731-3309

DRAWING NUMBER: 1-3513
SHEET NUMBER: A-0.8

RVT: Autodesk Docs://US CA_D3371901_POLA TIMSF/1-3513-JEG-12-A_WashRoom_R25.rvt
DATE: 9/15/2025 2:14:20 PM

LADBS – DEPARTMENT OF BUILDING AND SAFETY

P/BC 2020-091

THESE DIAGRAMS ILLUSTRATES THE SPECIFIC REQUIREMENTS OF THESE REGULATIONS AND ARE INTENDED ONLY AS AN AID FOR BUILDING DESIGN AND CONSTRUCTION.

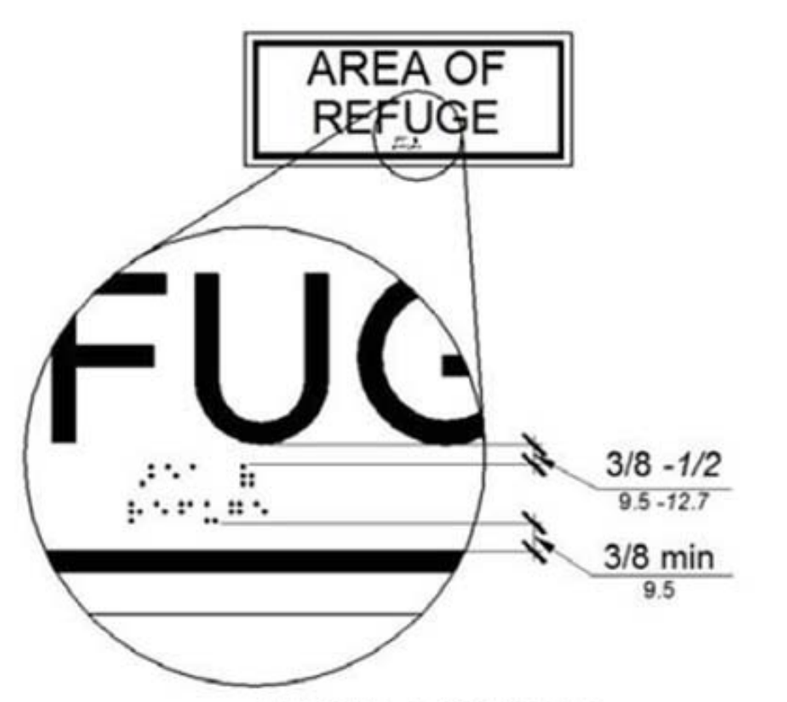

FIGURE 11B-703.3.2
POSITION OF BRAILLE

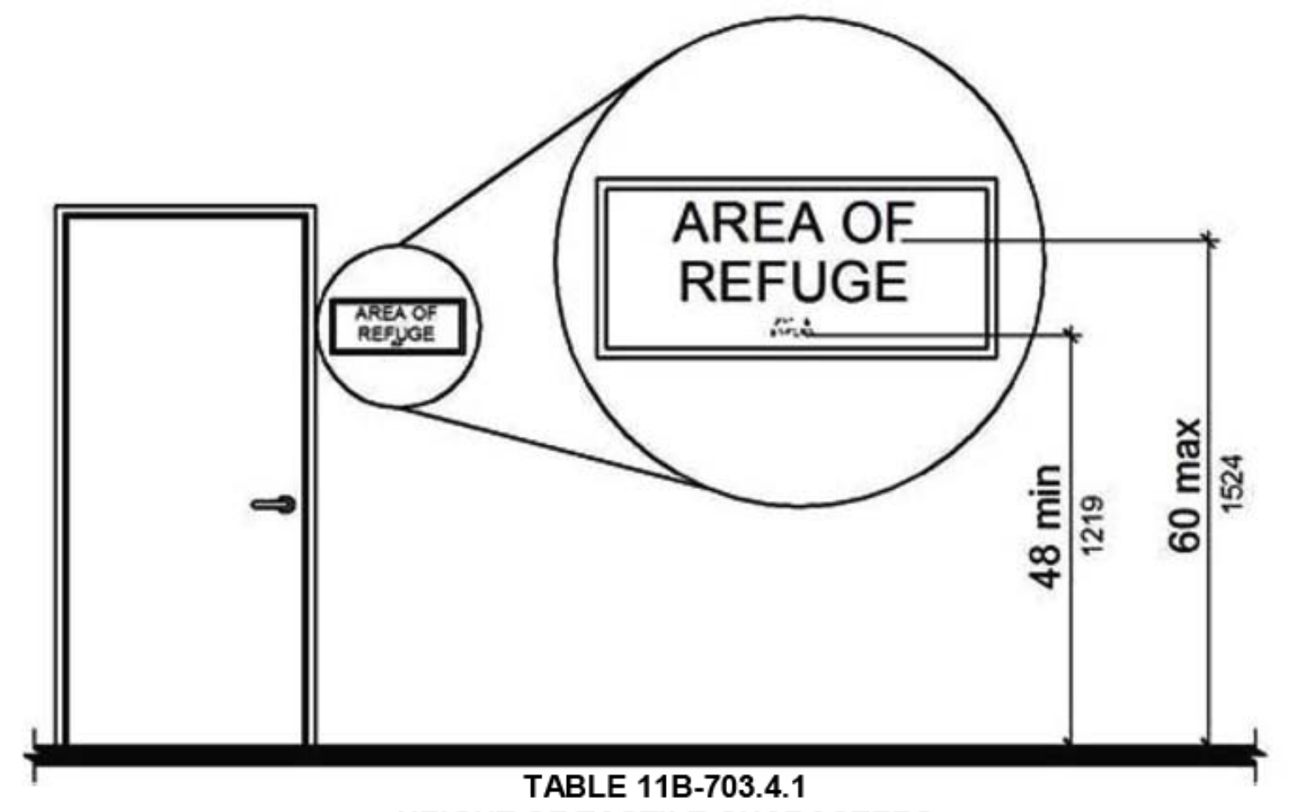

TABLE 11B-703.4.1
HEIGHT OF TACTILE CHARACTERS ABOVE FINISH FLOOR OR GROUND

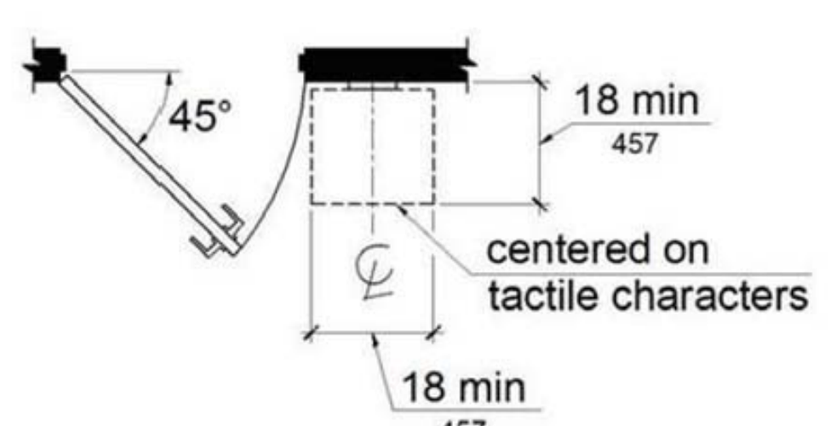

FIGURE 11B-703.4.2
LOCATION OF TACTILE SIGNS AT DOORS

As a covered entity under Title II of the Americans with Disabilities Act, the City of Los Angeles does not discriminate on the basis of disability and, upon request, will provide reasonable accommodation to ensure equal access to its programs, services and activities.

Page 3 of 5

LADBS – DEPARTMENT OF BUILDING AND SAFETY

P/BC-2020-091

THESE DIAGRAMS ILLUSTRATES THE SPECIFIC REQUIREMENTS OF THESE REGULATIONS AND ARE INTENDED ONLY AS AN AID FOR BUILDING DESIGN AND CONSTRUCTION.

TOILETS AND BATHING FACILITIES GEOMETRIC SYMBOLS

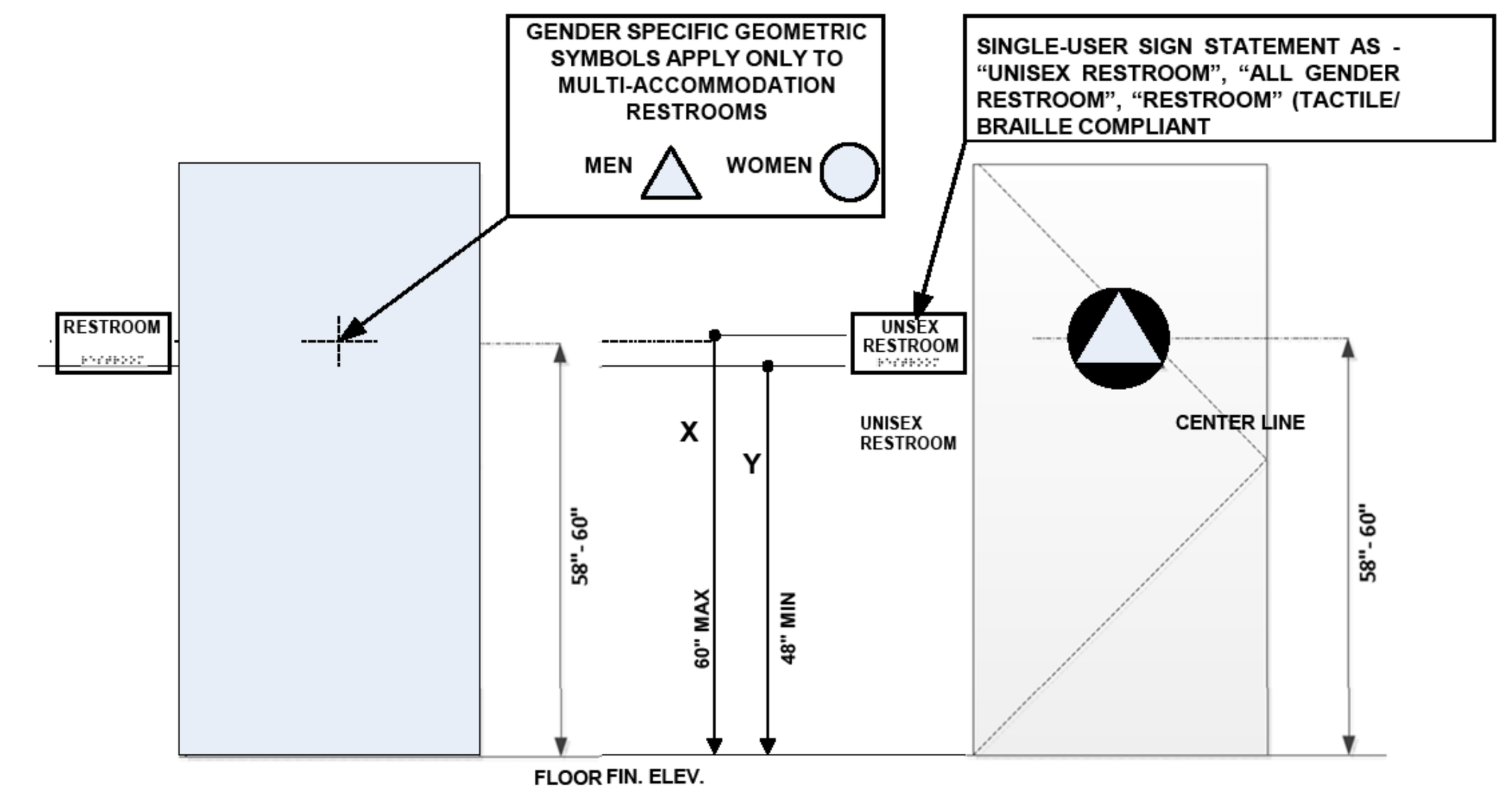

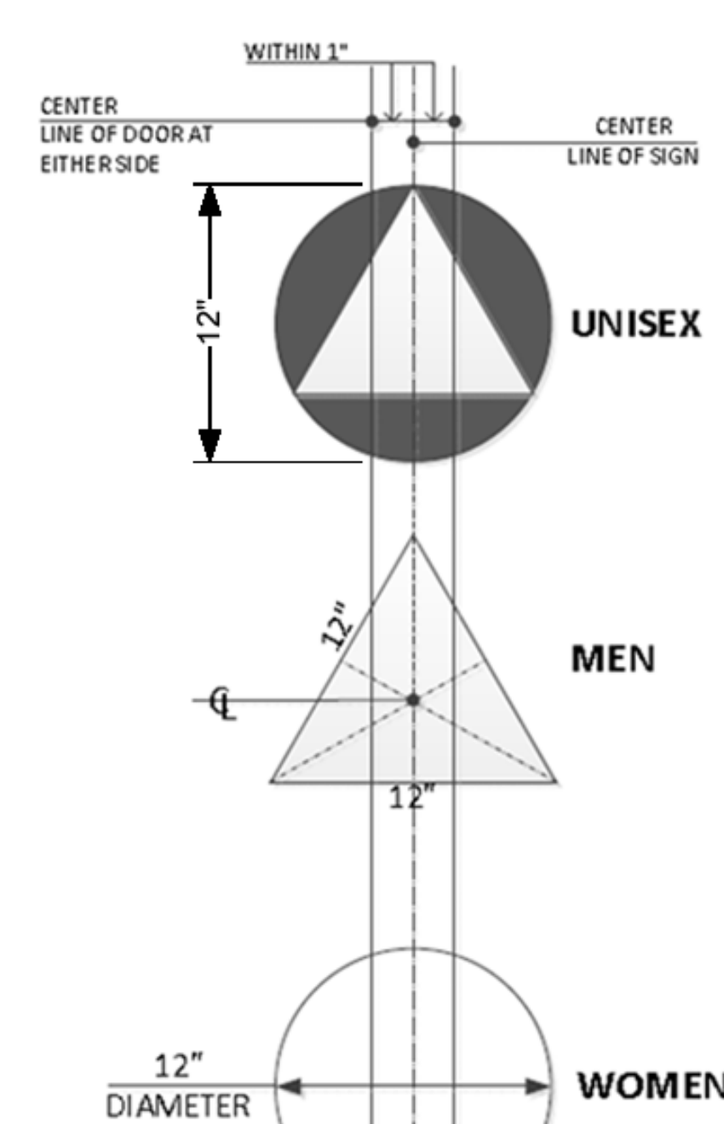

NOTE: PICTOGRAMS NOT REQUIRED

The provisions of CBC Chapter 11B require that a sanitary facility that is not specifically identified as for "men" or "women" (referred to in Chapter 11B as a "unisex" facility) have a geometric symbol on the door that is an equilateral triangle superimposed onto a circle. The "unisex" symbol is the only specific indicator required to be provided by Chapter 11B for a toilet facility that is available for use by all individuals. No pictogram, text, or braille is required on the symbol. (See attachment, Exhibit A.)

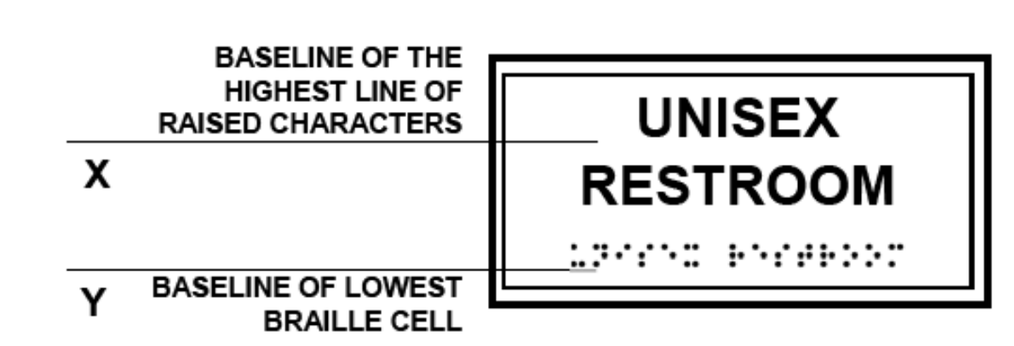

TACTILE / RAISED CHARACTER & GD-II BRAILLE SIGN

11B-703.4.1 Height above finish floor or ground.

Tactile characters on signs shall be located 48 inches (1219 mm) minimum above the finish floor or ground surface, measured from the baseline of the lowest Braille cells and 60 inches (1524 mm) maximum above the finish floor or ground surface, measured from the baseline of the highest line of raised characters. Exception: Tactile characters for elevator car controls shall not be required to comply with Section 11B- 703.4.1. 1

As a covered entity under Title II of the Americans with Disabilities Act, the City of Los Angeles does not discriminate on the basis of disability and, upon request, will provide reasonable accommodation to ensure equal access to its programs, services and activities.

Page 4 of 5

LADBS – DEPARTMENT OF BUILDING AND SAFETY

P/BC-2020-091

THESE DIAGRAMS ILLUSTRATES THE SPECIFIC REQUIREMENTS OF THESE REGULATIONS AND ARE INTENDED ONLY AS AN AID FOR BUILDING DESIGN AND CONSTRUCTION.

IDENTIFICATION OF ALL GENDER SINGLE-USER TOILET FACILITIES
Compliant with the California Building Code (CBC) Chapter 11B

EXHIBIT A - Door Symbol (required by the CBC)

This image represents the door symbol that is required by CBC 11B-216.8 to identify an all-gender/unisex single-user toilet facility. The symbol must comply with the requirements of CBC 11B-703.7.2.6.3. No pictogram, text, or braille is required on the symbol.

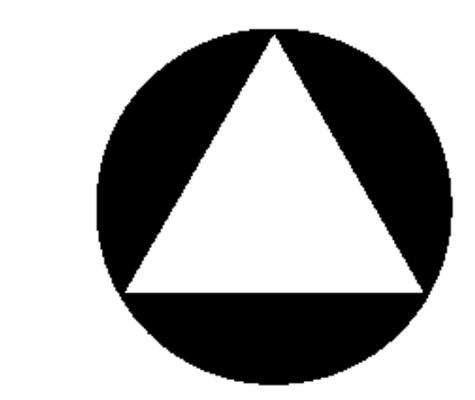

EXHIBIT B - Designation sign on wall

Designation signs are not required to be provided by the CBC or the 2010 ADAS. If provided, a designation sign adjacent to the door must comply with the scoping requirements of CBC 11B-216.2, and the technical requirements for raised characters (CBC 11B-703.2), braille (CBC 11B-703.3), visual characters (CBC 11B-703.5), and requirements for installation height and location (CBC 11B-703.4). No pictogram is required. The following signs illustrate acceptable examples for designation sign text:



As a covered entity under Title II of the Americans with Disabilities Act, the City of Los Angeles does not discriminate on the basis of disability and, upon request, will provide reasonable accommodation to ensure equal access to its programs, services and activities.

Page 5 of 5

LADBS – DEPARTMENT OF BUILDING AND SAFETY

INFORMATION BULLETIN / PUBLIC - BUILDING CODE
REFERENCE NO.: LABC Sec.11B-305,604,605 Effective: 01/01/2020
DOCUMENT NO.: **P/BC 2020-087** Revised:
Previously Issued As: P/BC 2017-087

ACCESSIBILITY DETAILS FOR RESTROOMS AND DRINKING FOUNTAINS

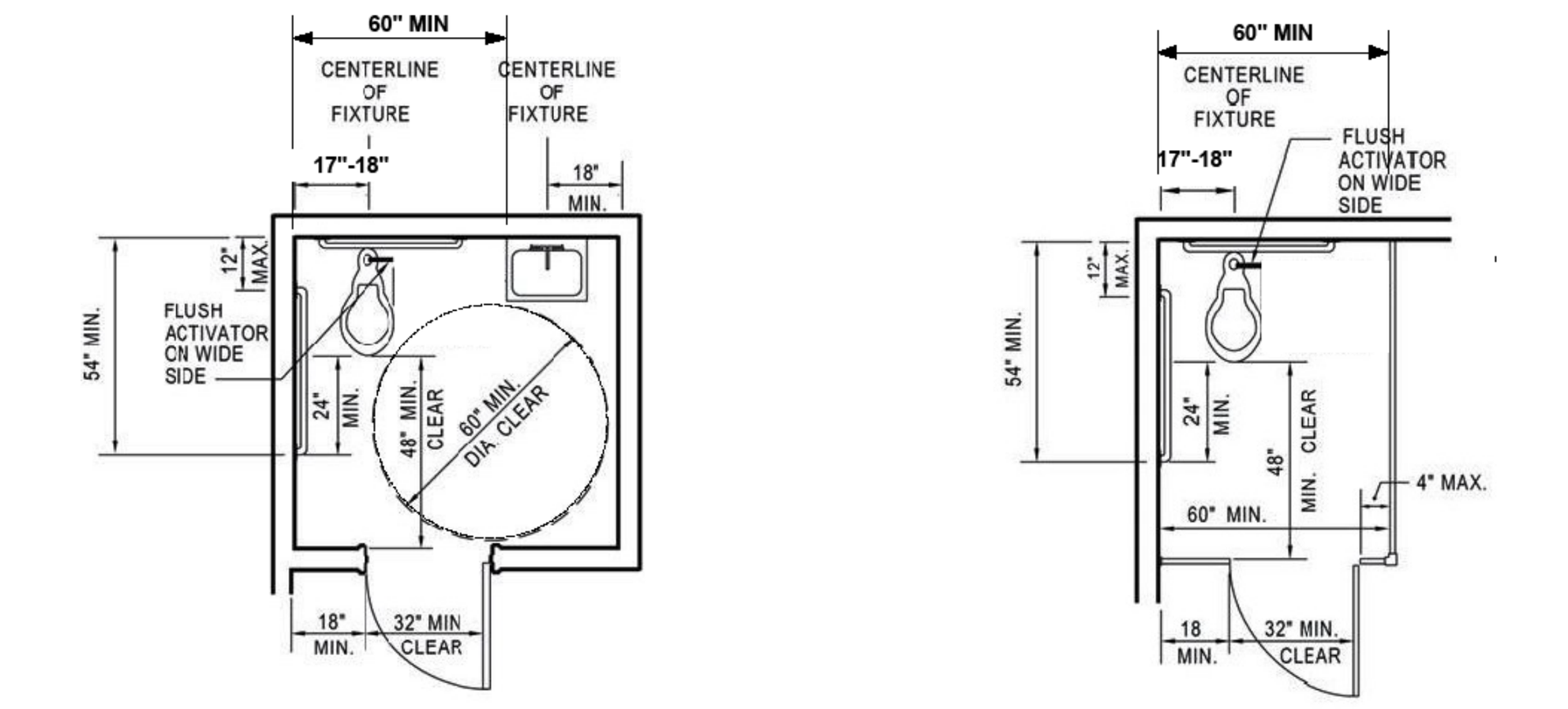

SINGLE-ACCOMMODATION TOILET FACILITY

ACCESSIBLE WATER CLOSET COMPARTMENT WITHIN A MULTIPLE-ACCOMMODATION TOILET FACILITY

Doors shall not swing into the clear floor space or clearance required for any fixture. Other than the door to the accessible water closet compartment, a door in any position, may encroach into the turning space by 12 inches maximum. (11B-603.2.3)
Exceptions: (2) Where the toilet room or bathing room is for individual use and a clear floor space complying with Section 11B-305.3 is provided within the room beyond the arc of the door swing, doors shall be permitted to swing into the clear floor space or clearance required for any fixture.

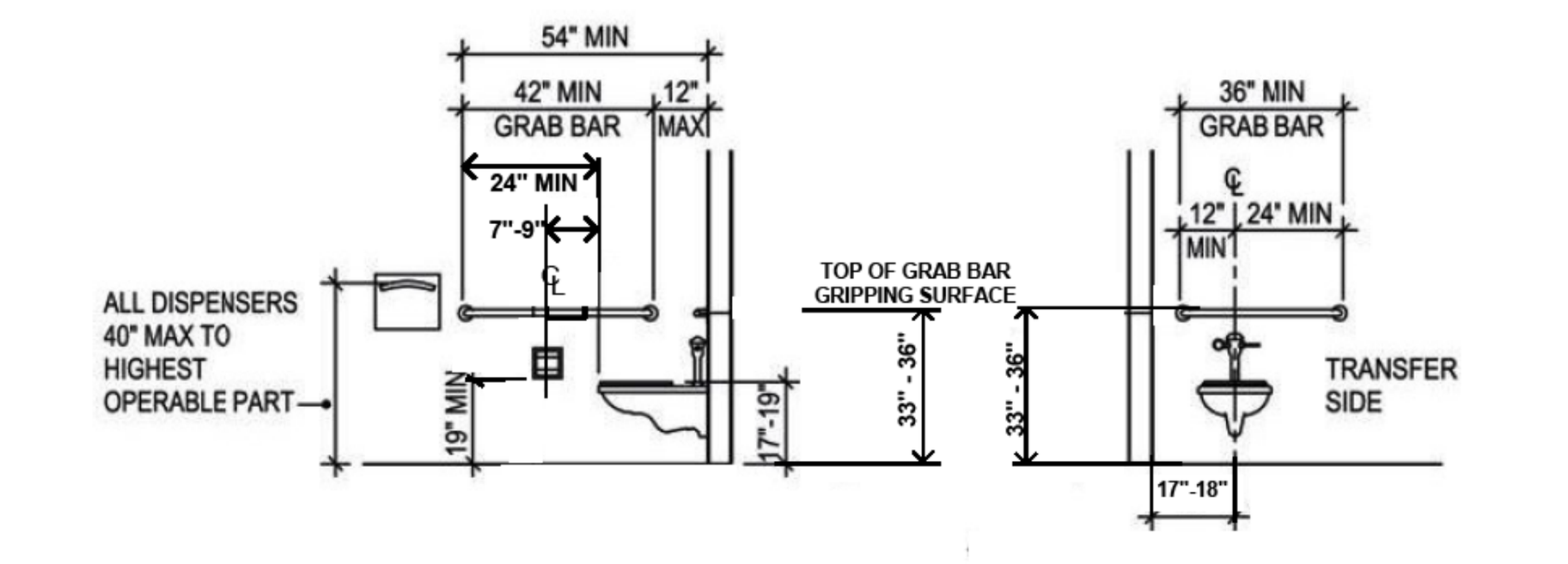

FIGURE 11B-604.7
DISPENSER OUTLET LOCATION

FIGURE 11B-604.5.1
SIDE WALL GRAB BAR AT WATER CLOSETS

FIGURE 11B-604.5.2
REAR WALL GRAB BAR AT WATER CLOSETS

THESE DIAGRAMS ILLUSTRATE THE SPECIFIC REQUIREMENTS OF THESE REGULATIONS AND ARE INTENDED ONLY AS AN AID FOR BUILDING DESIGN AND CONSTRUCTION.

As a covered entity under Title II of the Americans with Disabilities Act, the City of Los Angeles does not discriminate on the basis of disability and, upon request, will provide reasonable accommodation to ensure equal access to its programs, services and activities.

Page 1 of 5

LADBS – DEPARTMENT OF BUILDING AND SAFETY

P/BC 2020-087

THESE DIAGRAMS ILLUSTRATE THE SPECIFIC REQUIREMENTS OF THESE REGULATIONS AND ARE INTENDED ONLY AS AN AID FOR BUILDING DESIGN AND CONSTRUCTION.

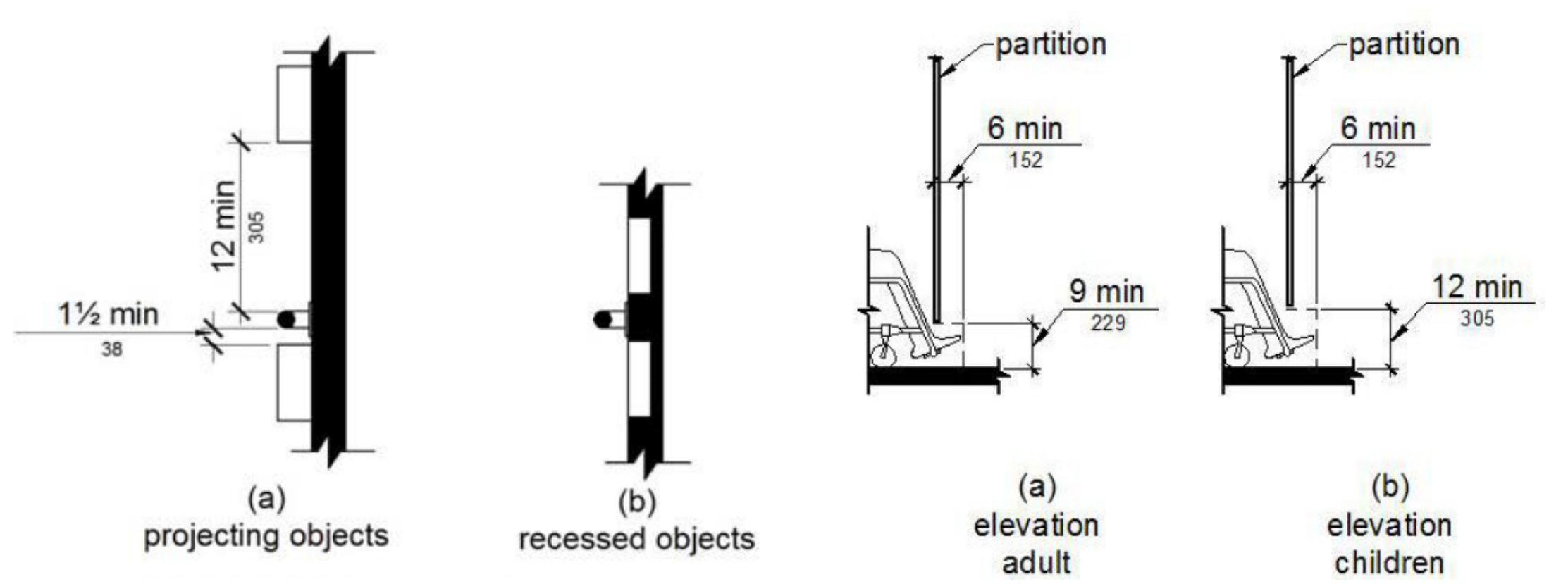

FIGURE 11B-609.3
SPACING OF GRAB BARS

FIGURE 11B-604.8.1.4
WHEELCHAIR ACCESSIBLE TOILET COMPARTMENT TOE CLEARANCE

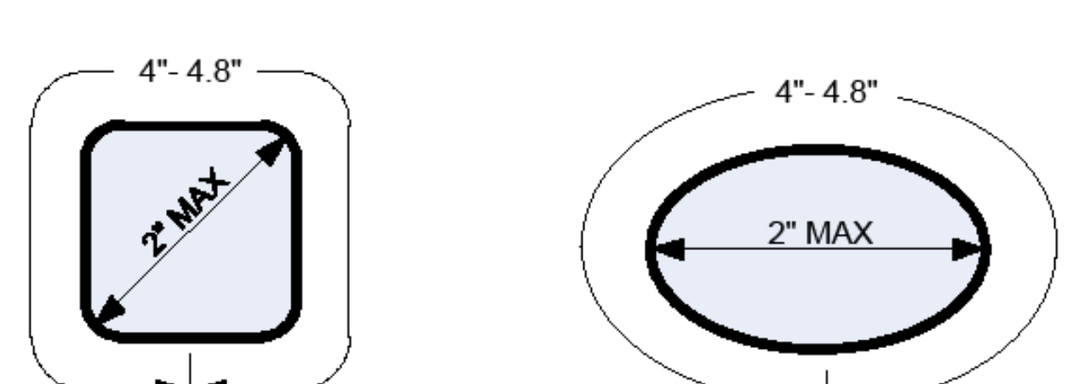

FIGURE 11B-609.2.2
GRAB BAR NON-CIRCULAR CROSS SECTION

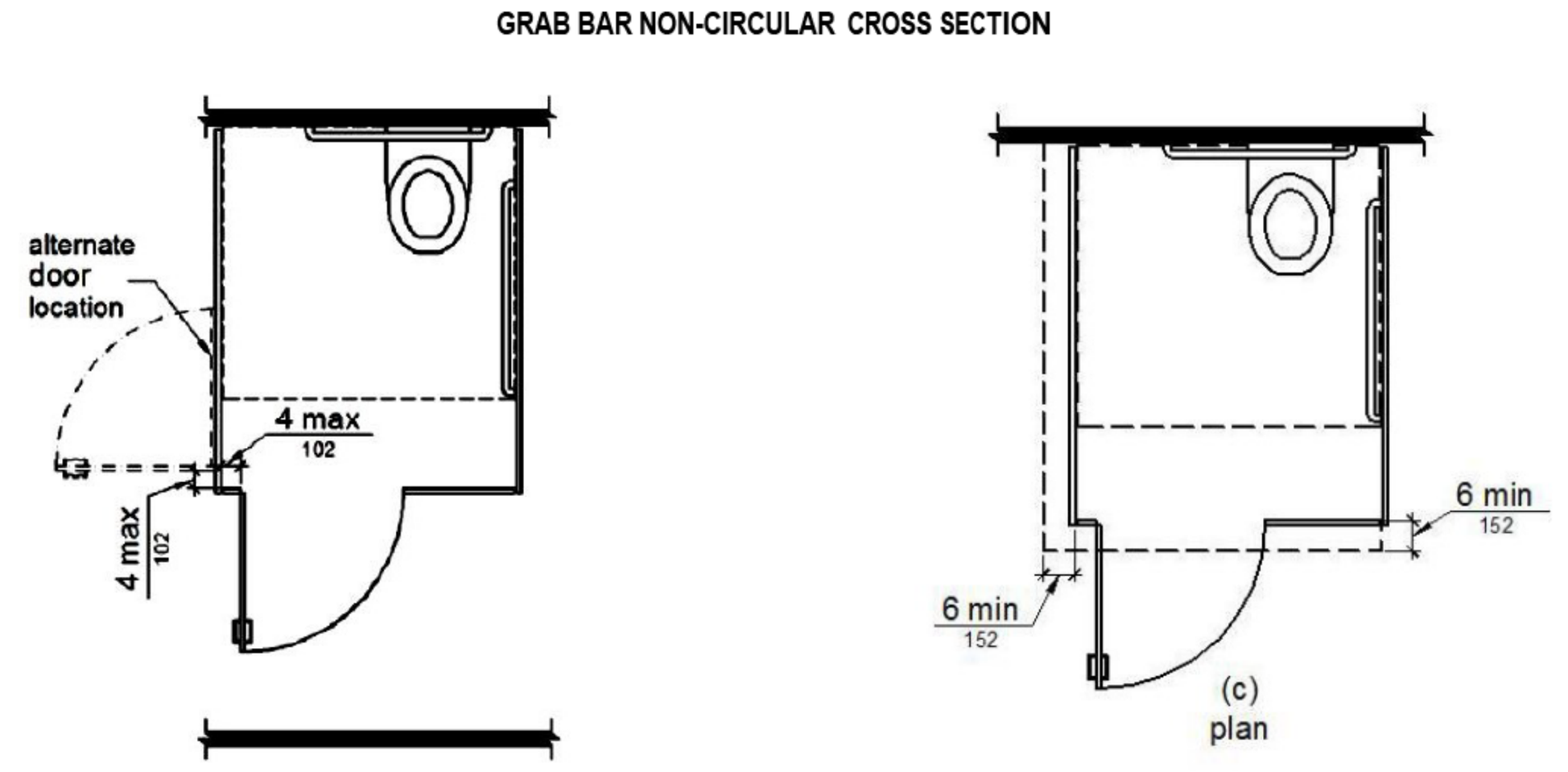

FIGURE 11B-604.8.1.2
WHEELCHAIR ACCESSIBLE TOILET COMPARTMENT DOORS

FIGURE 11B-604.8.1.4
WHEELCHAIR ACCESSIBLE TOILET COMPARTMENT TOE CLEARANCE

As a covered entity under Title II of the Americans with Disabilities Act, the City of Los Angeles does not discriminate on the basis of disability and, upon request, will provide reasonable accommodation to ensure equal access to its programs, services and activities.

Page 2 of 5

LADBS – DEPARTMENT OF BUILDING AND SAFETY

P/BC 2020-087

THESE DIAGRAMS ILLUSTRATE THE SPECIFIC REQUIREMENTS OF THESE REGULATIONS AND ARE INTENDED ONLY AS AN AID FOR BUILDING DESIGN AND CONSTRUCTION.

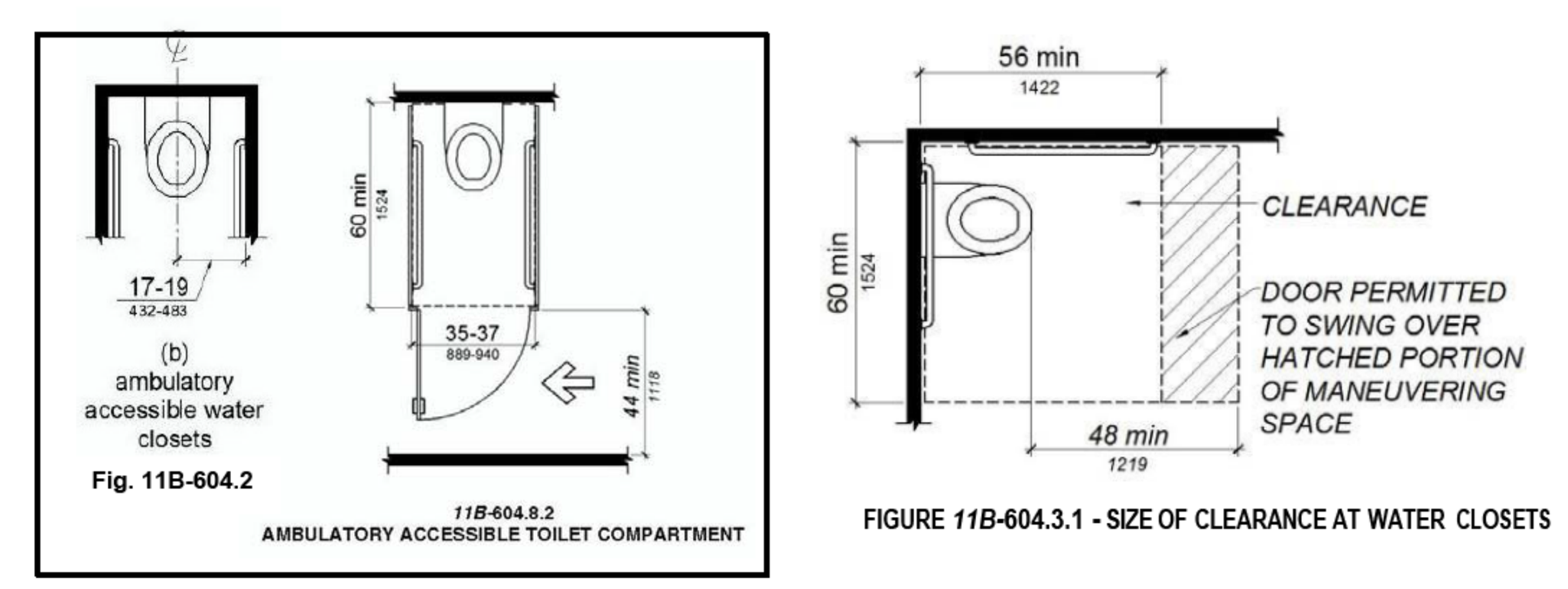

11B-604.8.2
AMBULATORY ACCESSIBLE TOILET COMPARTMENT

FIGURE 11B-604.3.1 - SIZE OF CLEARANCE AT WATER CLOSETS

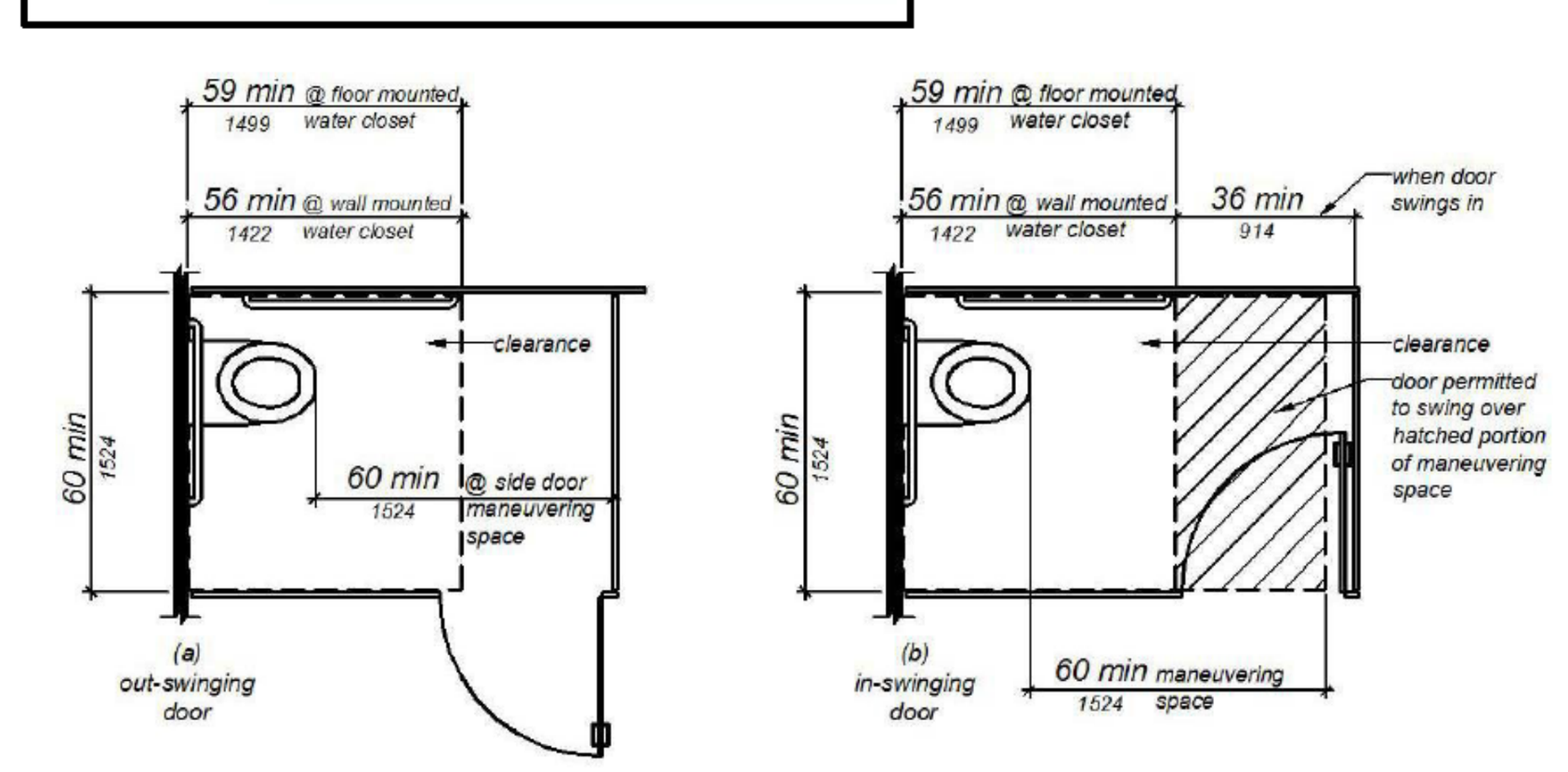

FIGURE 11B-604.8.1.1.2 - MANEUVERING SPACE WITH SIDE-OPENING DOOR

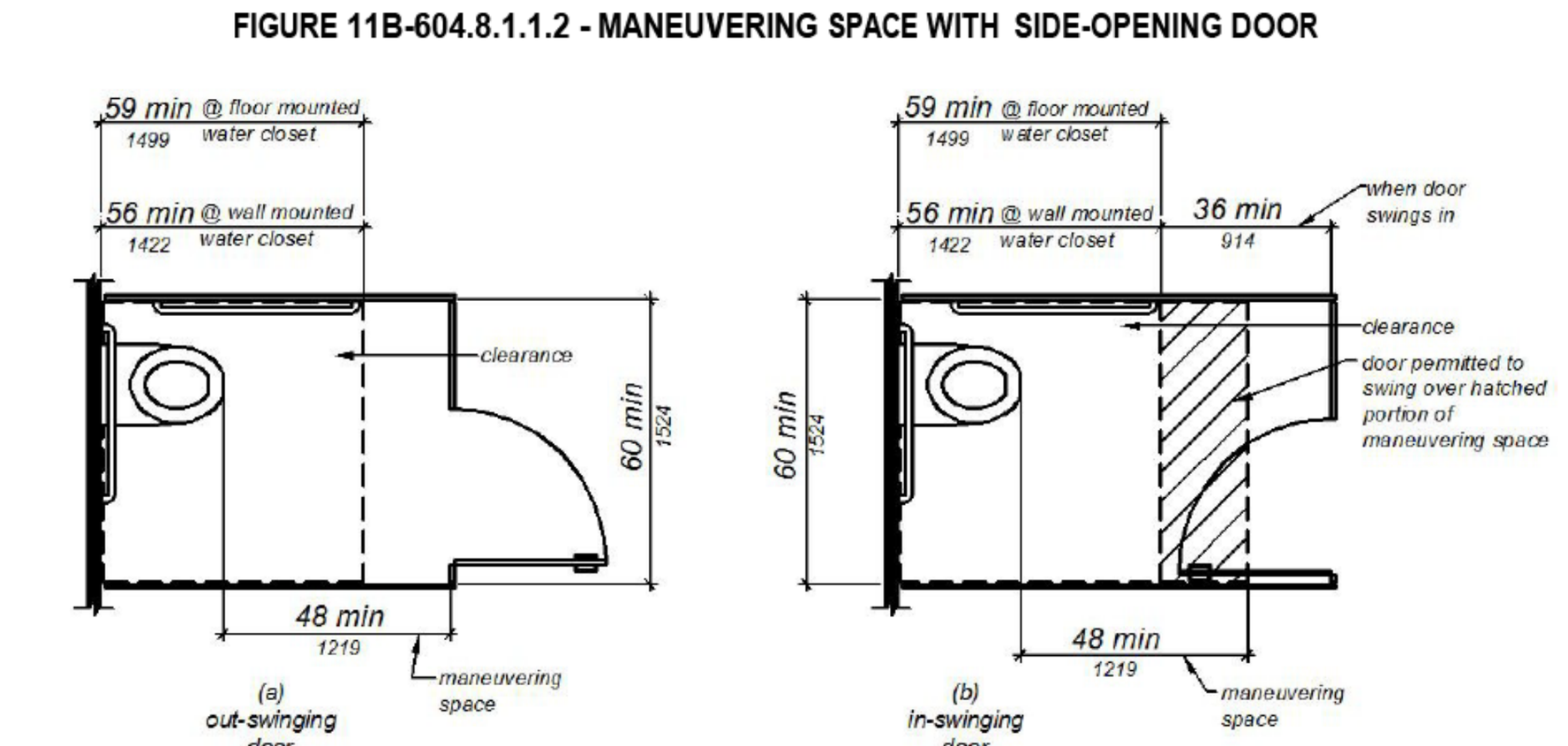

FIGURE 11B-604.8.1.1.3 - MANEUVERING SPACE WITH END-OPENING DOOR

As a covered entity under Title II of the Americans with Disabilities Act, the City of Los Angeles does not discriminate on the basis of disability and, upon request, will provide reasonable accommodation to ensure equal access to its programs, services and activities.

Page 3 of 5

LADBS – DEPARTMENT OF BUILDING AND SAFETY

P/BC 2020-087

THESE DIAGRAMS ILLUSTRATE THE SPECIFIC REQUIREMENTS OF THESE REGULATIONS AND ARE INTENDED ONLY AS AN AID FOR BUILDING DESIGN AND CONSTRUCTION.

SINK / URINAL

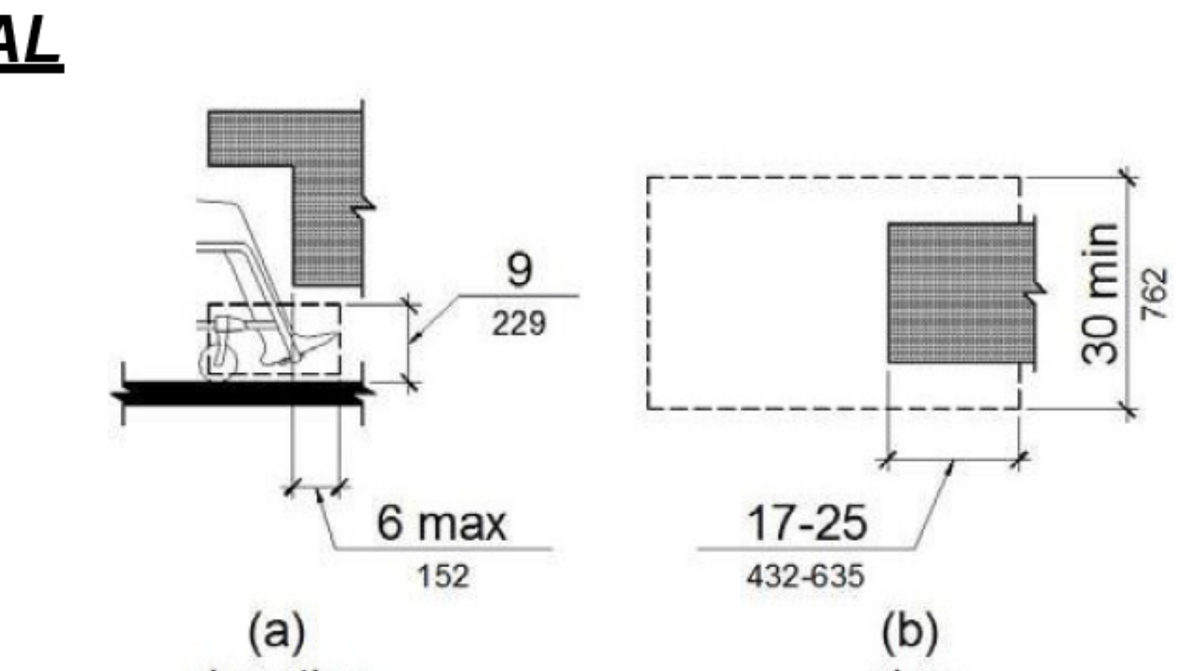

FIGURE 11B-306.2 - TOE CLEARANCE

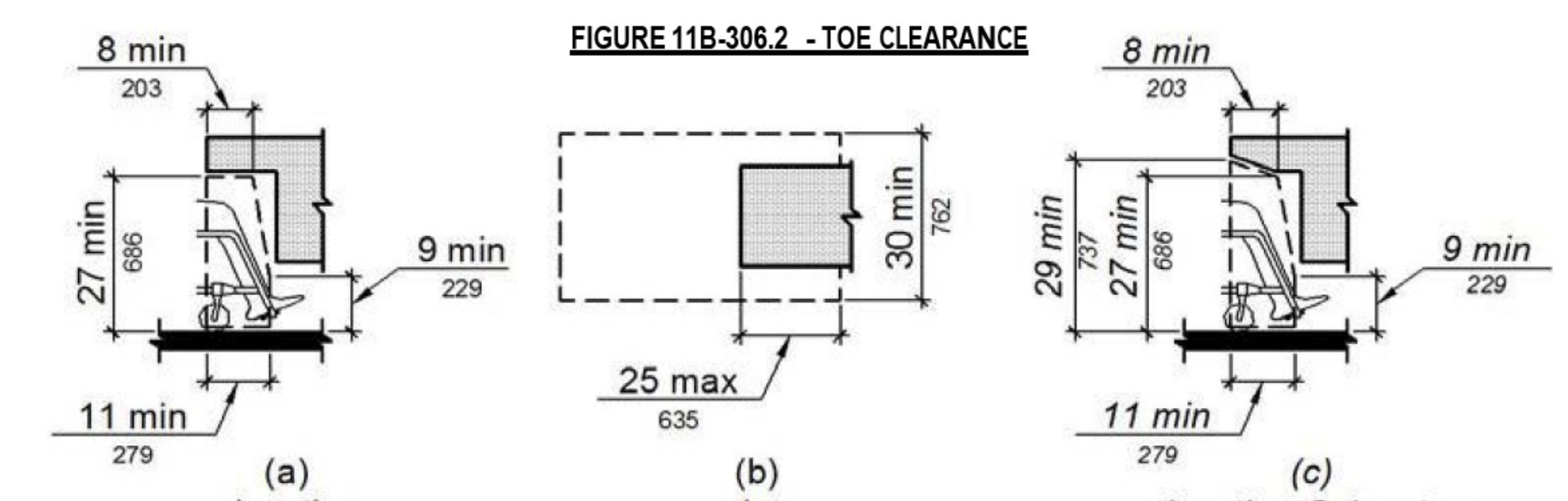

FIGURE 11B-306.3 - KNEE CLEARANCE

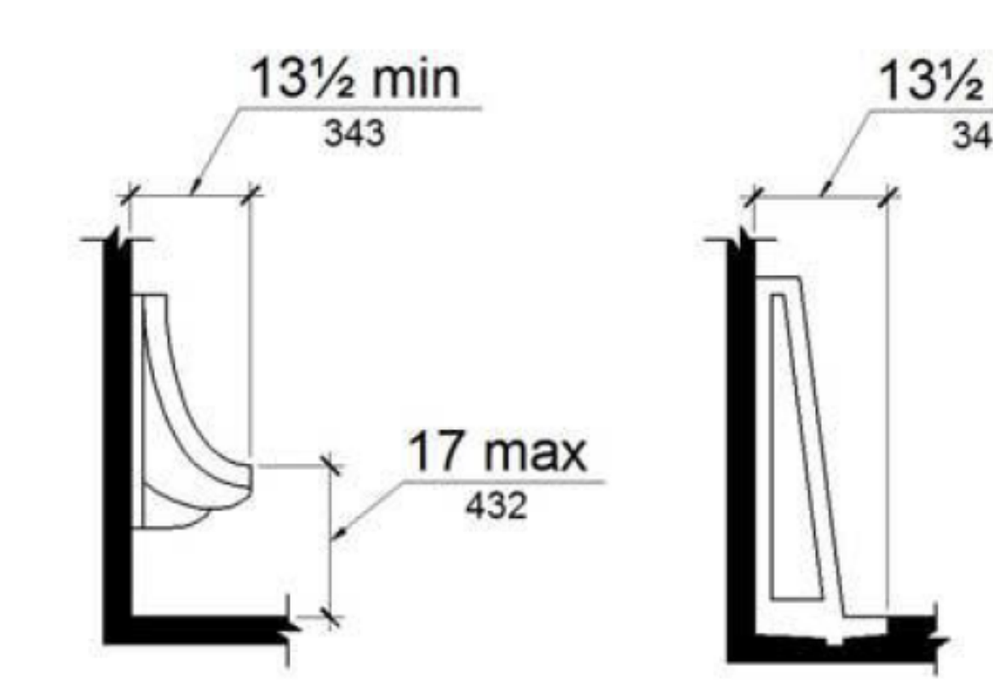

FIGURE 11B-605.2 - HEIGHT AND DEPTH OF URINALS

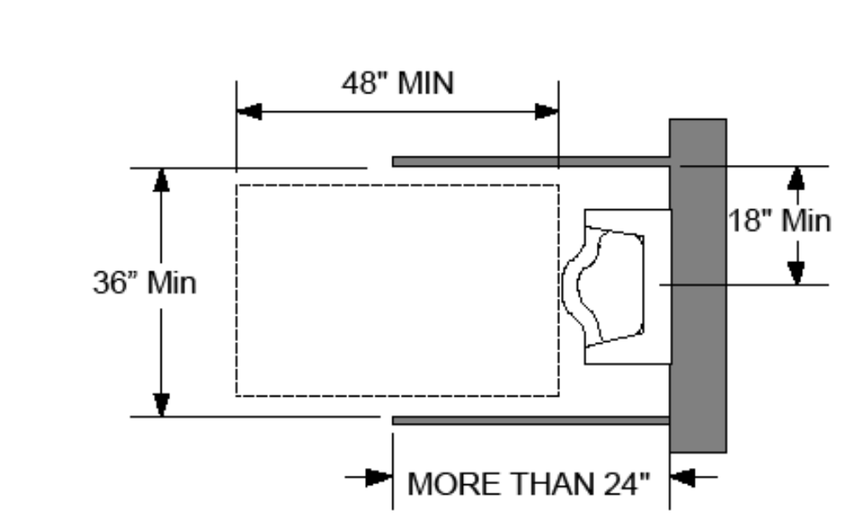

PLAN

As a covered entity under Title II of the Americans with Disabilities Act, the City of Los Angeles does not discriminate on the basis of disability and, upon request, will provide reasonable accommodation to ensure equal access to its programs, services and activities..
Page 4 of 5

LADBS – DEPARTMENT OF BUILDING AND SAFETY

INFORMATION BULLETIN / PUBLIC - BUILDING CODE
REFERENCE NO.: LABC Sec. 11B-226.4, 307,308, 309,704,902 Effective: 01/01/2020
DOCUMENT NO.: **P/BC 2020-089** Revised:
Previously Issued As: P/BC 2017-089

ACCESSIBILITY DETAILS FOR OBSTRUCTIONS, REACH RANGES, TELEPHONES & BABY CHANGING STATIONS

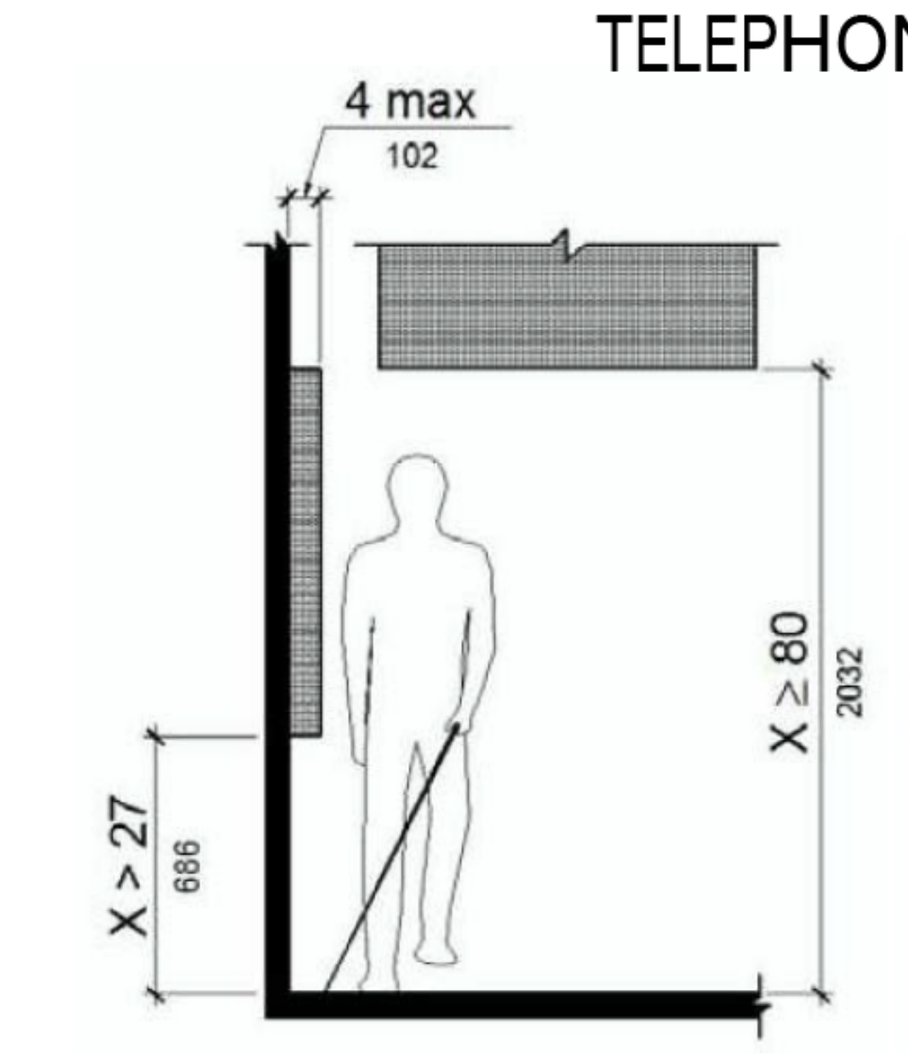

FIGURE 11B-307.2
LIMITS OF PROTRUDING OBJECTS

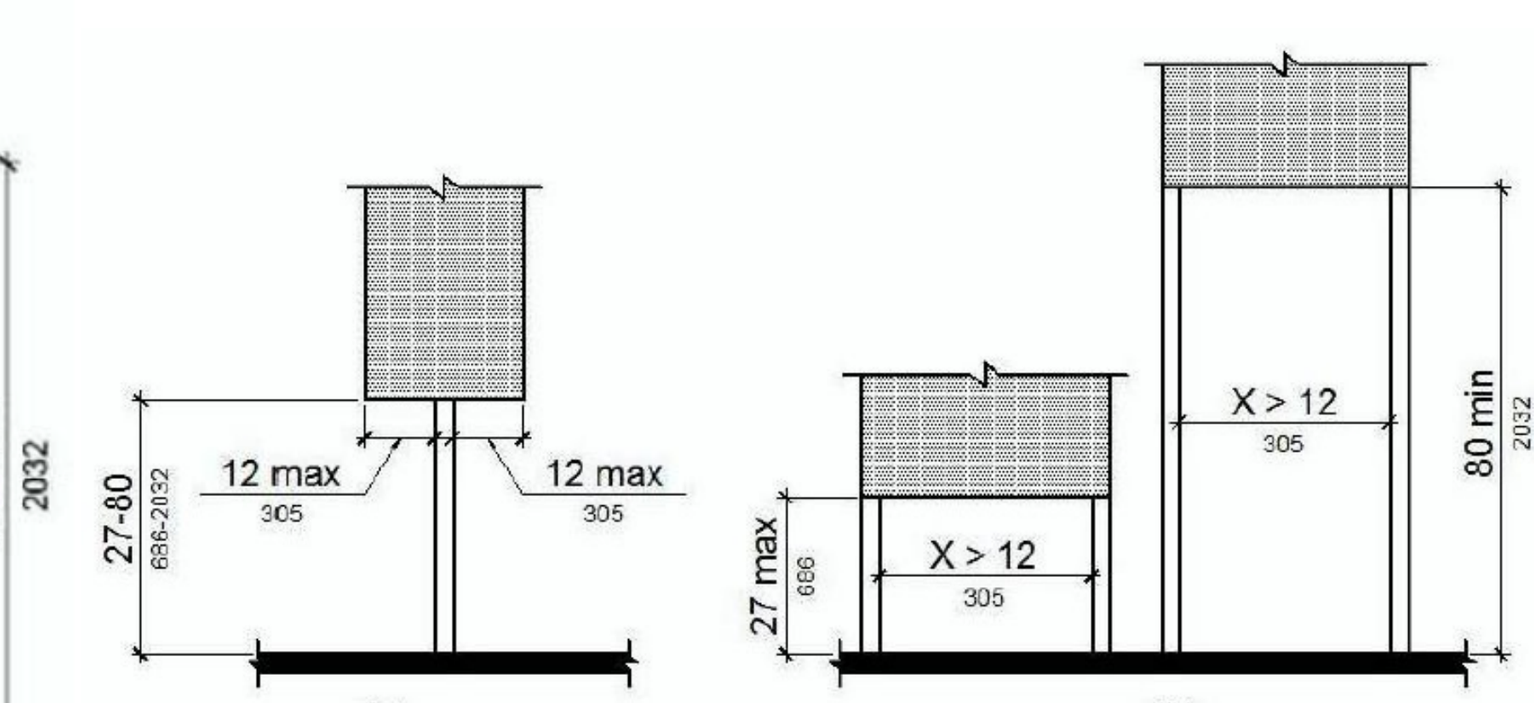

FIGURE 11B-307.3
POST-MOUNTED PROTRUDING OBJECTS

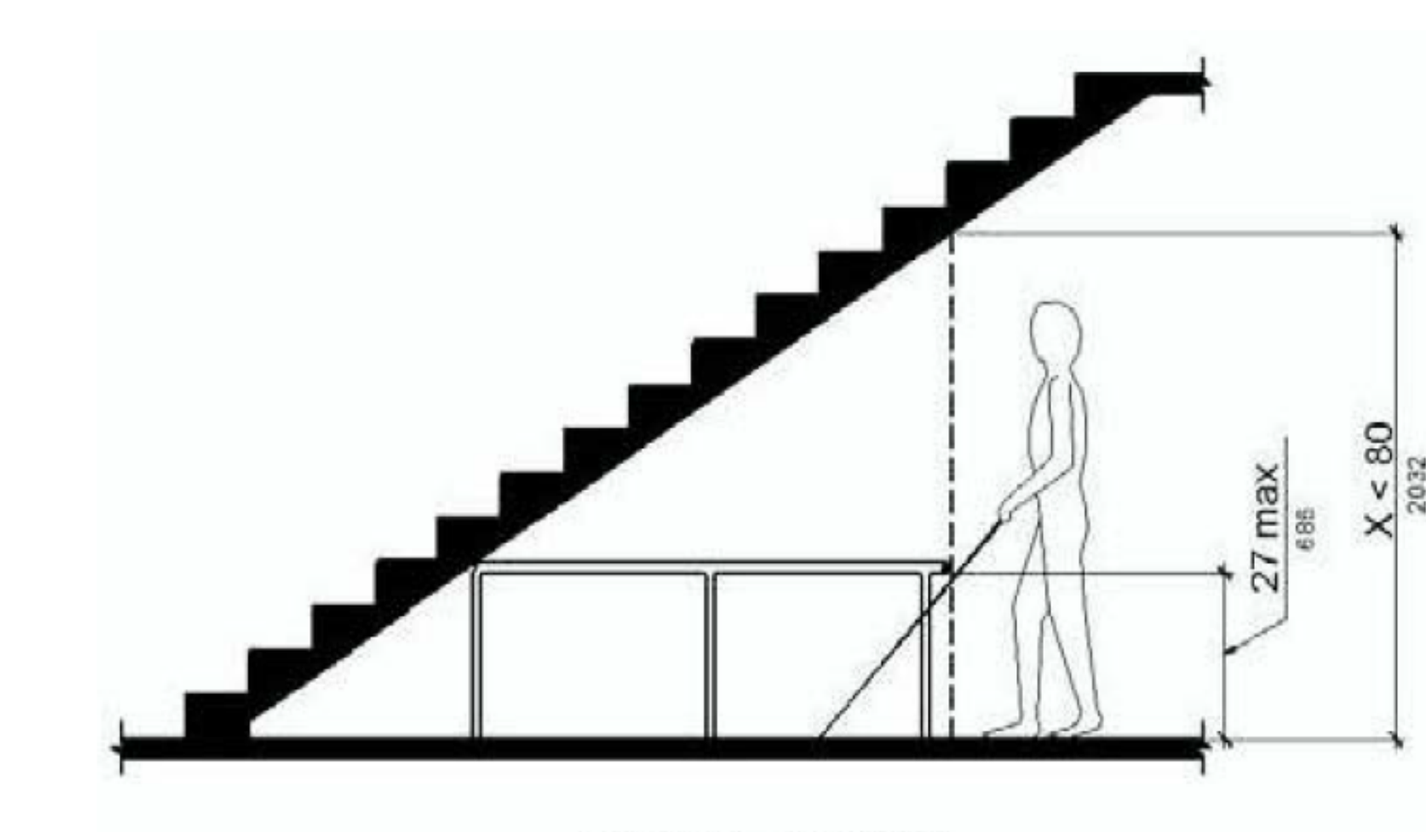

FIGURE 11B-307.4
VERTICAL CLEARANCE

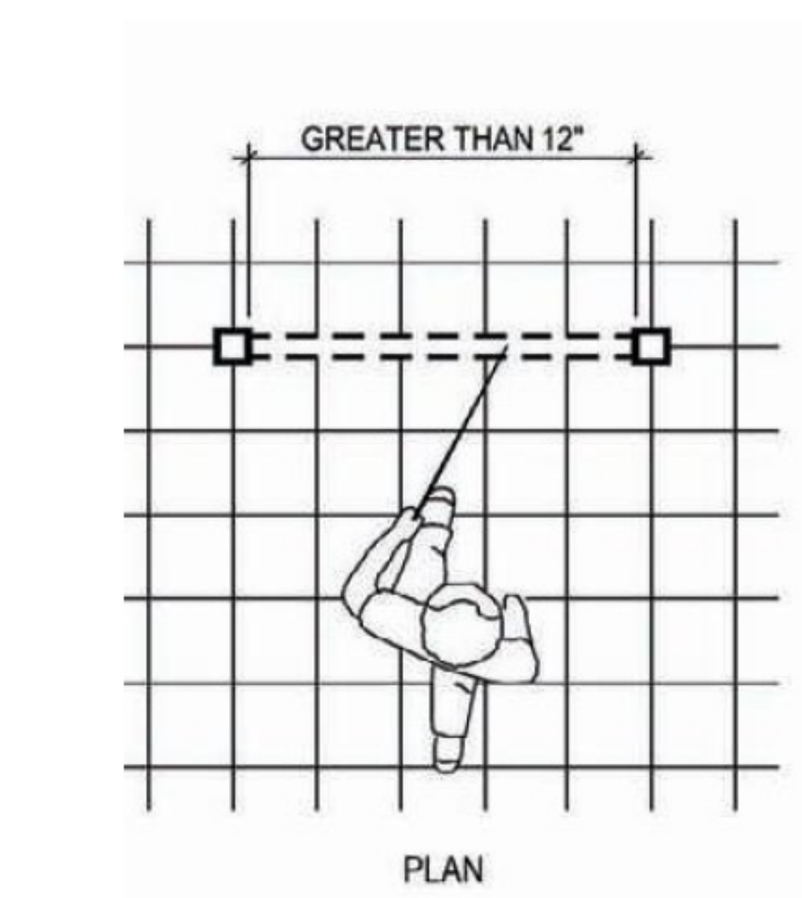

THESE DIAGRAMS ILLUSTRATE THE SPECIFIC REQUIREMENTS OF THESE REGULATIONS AND ARE INTENDED ONLY AS AN AID FOR BUILDING DESIGN AND CONSTRUCTION

As a covered entity under Title II of the Americans with Disabilities Act, the City of Los Angeles does not discriminate on the basis of disability and, upon request, will provide reasonable accommodation to ensure equal access to its programs, services and activities.
Page 1 of 5

NO.	DATE	DRAWN	REVISIONS -	CHK'D	APP'D
A	3/20/25	-	30 % CONCEPT DESIGN		
B	4/25/25	-	FINAL CONCEPT DESIGN		
C	7/18/25	-	40 % DESIGN		
D	9/19/25	-	80% DESIGN		

NOT FOR CONSTRUCTION

NO.	DATE	DRAWN	REVISIONS -	CHK'D	APP'D

80% DESIGN

Jacobs
2600 MICHELSON DRIVE, SUITE 500
IRVINE, CA 92612
T: (949) 224-7500
F: (949) 224-7501

LICENSED ARCHITECT ROBERT G SMITH C-34258 02/28/2027 RENEWAL DATE STATE OF CALIFORNIA

SCALE: AS SHOWN
DRAWN: A. TERMYNA
CHECKED: D. WINSTEAD
DESIGNED: R. SMITH
ENGINEER / ARCHITECT

TERMINAL ISLAND MARITIME SUPPORT FACILITY

ACCESSIBILITY DETAILS

THE PORT OF LOS ANGELES
ENGINEERING DIVISION
425 S. PALOS VERDES STREET SAN PEDRO CA 90731-3309

DRAWING NUMBER: 1-3513
SHEET NUMBER: A-0.9

RVT: Autodesk Docs://US CA_D3371901_POLA TIMSF/1-3513-JEG-12-A_WashRoom_R25.rvt
DATE: 9/15/2025 2:14:21 PM

THESE DIAGRAMS ILLUSTRATE THE SPECIFIC REQUIREMENTS OF THESE REGULATIONS AND ARE INTENDED ONLY AS AN AID FOR BUILDING DESIGN AND CONSTRUCTION.

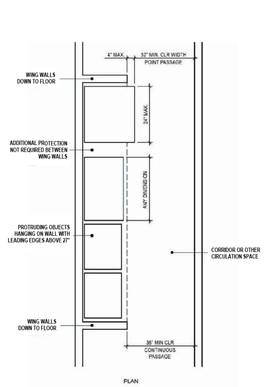

EXAMPLE OF PROTECTION AROUND WALL-MOUNTED OBJECTS AND MEASUREMENTS OF CLEAR WIDTHS

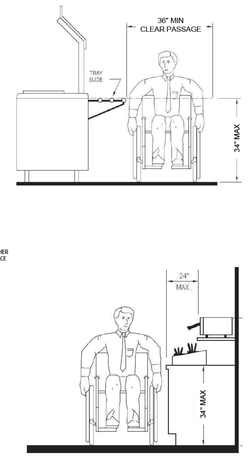

As a covered entity under Title II of the Americans with Disabilities Act, the City of Los Angeles does not discriminate on the basis of disability and, upon request, will provide reasonable accommodation to ensure equal access to its programs, services and activities.

P/BC 2020-089

THESE DIAGRAMS ILLUSTRATE THE SPECIFIC REQUIREMENTS OF THESE REGULATIONS AND ARE INTENDED ONLY AS AN AID FOR BUILDING DESIGN AND CONSTRUCTION

REACH RANGE

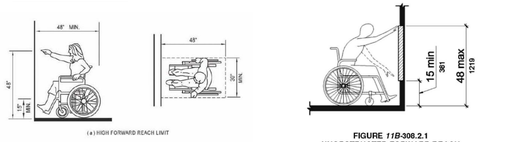

(a) HIGH FORWARD REACH LIMIT

FIGURE 11B-308.2.1
UNOBSTRUCTED FORWARD REACH

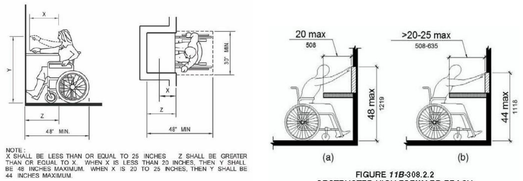

NOTE:
X SHALL BE LESS THAN OR EQUAL TO 25 INCHES. Z SHALL BE GREATER THAN OR EQUAL TO X. WHEN X IS LESS THAN 20 INCHES, THEN Y SHALL BE 48 INCHES MAXIMUM. WHEN X IS 20 TO 25 INCHES, THEN Y SHALL BE 44 INCHES MAXIMUM.

FORWARD REACH

FIGURE 11B-308.2.2
OBSTRUCTED HIGH FORWARD REACH

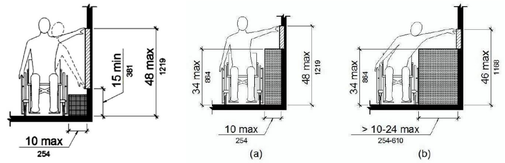

FIGURE 11B-308.3.1
UNOBSTRUCTED SIDE REACH

FIGURE 11B-308.3.2
OBSTRUCTED HIGH SIDE REACH

As a covered entity under Title II of the Americans with Disabilities Act, the City of Los Angeles does not discriminate on the basis of disability and, upon request, will provide reasonable accommodation to ensure equal access to its programs, services and activities.

NO.	DATE	DRAWN	REVISIONS -	CHK'D	APP'D
A	3/20/25	-	30 % CONCEPT DESIGN		
B	4/25/25	-	FINAL CONCEPT DESIGN		
C	7/18/25	-	40 % DESIGN		
D	9/19/25	-	80% DESIGN		

NOT FOR CONSTRUCTION

NO.	DATE	DRAWN	REVISIONS -	CHK'D	APP'D

80% DESIGN

Jacobs
2600 MICHELSON DRIVE, SUITE 500
IRVINE, CA 92612
T: (949) 224-7500
F: (949) 224-7501

LICENSED ARCHITECT
ROBERT G. SMITH
C-22258
02/26/2027
REGISTRAR DATE
STATE OF CALIFORNIA

SCALE: AS SHOWN
DRAWN: A. TERMYNA
CHECKED: D. WINSTEAD
DESIGNED: R. SMITH
ENGINEER / ARCHITECT

TERMINAL ISLAND MARITIME SUPPORT FACILITY

ACCESSIBILITY DETAILS

THE PORT OF LOS ANGELES
ENGINEERING DIVISION
425 S. PALOS VERDES STREET SAN PEDRO CA 90731-3309

DRAWING NUMBER 1-3513
SHEET NUMBER A-0.10

RVT: Autodesk Docs://US CA_D3371901_POLA TIMSF1-3513-JEG-12-A_WashRoom_R25.rvt
DATE: 9/15/2025 2:14:21 PM

LA DBS DEPARTMENT OF BUILDING AND SAFETY

2023 Los Angeles Green Building Code

FORM GRN 5

MANDATORY REQUIREMENTS CHECKLIST

NEWLY CONSTRUCTED NON-RESIDENTIAL BUILDINGS

(COMPLETE AND INCORPORATE THIS FORM INTO THE PLANS)

Permit # _____ - _____ - _____ Date: _____

ITEM #	CODE SECTION	REQUIREMENT	REFERENCE SHEET (Sheet # or N/A)	COMMENTS (e.g. note #, detail # or reason for N/A)
		PLANNING AND DESIGN		
1	5.106.1	Storm water pollution prevention		
2	5.106.4.1.1	Short-term bicycle parking		
3	5.106.4.1.2	Long-term bicycle parking		
4	5.106.5.2	Designated parking		
5	5.106.5.3	Electric vehicle charging		
6	5.106.8	Light pollution reduction		
7	5.106.10	Grading and paving		
8	5.106.11	Hardscape alternatives		
9	5.106.13	Cool Roof		
		ENERGY EFFICIENCY		
10	5.211.1	Solar ready buildings		
		WATER EFFICIENCY & CONSERVATION		
11	5.303.1.1	New buildings in excess of 50,000 sq. ft.	N/A	Buildings do not total
12	5.303.1.2	Excess consumption		
13	5.303.2	Water reduction		
14	5.303.3	Water conserving plumbing fixtures and fittings		
15	5.303.3.3	Showerheads	N/A	No showers provided
16	5.304.1	Outdoor water use in landscape areas		
17	5.304.3	Irrigation controller and sensor application		
18	5.304.4	Outdoor water use meters		
19	5.304.5	Exterior faucets		
20	5.305.1	Graywater ready		
21	5.305.2	Recycled water supply to fixtures		
22	5.305.3	Cooling towers		
23	5.305.4	Groundwater discharge		
		MATERIAL CONSERVATION & RESOURCE EFFICIENCY		
24	5.407.1	Weather protection		
25	5.407.2.1	Sprinklers		
26	5.407.2.2.1	Nonabsorbent floor and wall finishes		
27		Exterior door protection		
28	5.407.2.2.2	Flashing		
29	5.408.1	Construction waste reduction		

As a covered entity under Title II of the Americans with Disabilities Act, the City of Los Angeles does not discriminate on the basis of disability and, upon request, will provide reasonable accommodation to ensure equal access to its programs, services and activities.

LA DBS DEPARTMENT OF BUILDING AND SAFETY

2023 Los Angeles Green Building Code

FORM GRN 5

ITEM #	CODE SECTION	REQUIREMENT	REFERENCE SHEET (Sheet # or N/A)	COMMENTS (e.g. note #, detail # or reason for N/A)
30	5.408.3	Excavated soil and land clearing debris		
31	5.410.1	Recycling by occupants		
32	5.410.2	Commissioning (> 10,000 sq. ft.)		
33	5.410.2.1	– Owner's Project Requirements (OPR)		
34	5.410.2.2	– Basis of Design (BOD)		
35	5.410.2.3	– Commissioning plan		
36	5.410.2.4	– Functional performance testing		
37	5.410.2.5.1	– Systems manual		
38	5.410.2.5.2	– Systems operations training		
39	5.410.2.6	– Commissioning report		
40	5.410.4	Testing and adjusting (< 10,000 sq. ft.)		
41	5.410.4.2	– Systems		
42	5.410.4.3	– Procedures		
43	5.410.4.4	– Reporting		
44	5.410.4.5	– Operation and maintenance manual		
45	5.410.4.5.1	– Inspections and reports		
		ENVIRONMENTAL QUALITY		
46	5.503.1	Fireplace and Woodstoves		
47	5.504.1.3	Temporary ventilation		
48	5.504.3	Covering of duct openings and protection of mechanical equipment during construction		
49	5.504.4	Finish material pollutant control		
50	5.504.4.1	– Adhesives, sealants, and caulks		
51	5.504.4.3	– Paints and coatings		
52	5.504.4.3.1	– Aerosol paints and coatings		
53	5.504.4.3.2	– Verification		
54	5.504.4.4	Carpet systems		
55	5.504.4.4.1	Carpet cushion		
56	5.504.4.5	Composite wood products		
57	5.504.4.6	Resilient flooring systems		
58	5.504.5.3	Filters		
59	5.504.7	Environmental tobacco smoke (ETS) control		
60	5.505.1	Indoor moisture control		
61	5.506.2	Carbon dioxide (CO_2) monitoring		
62	5.507.4.1	Exterior noise transmission prescriptive method		
63		– Exterior noise transmission for roof		
64		– Exterior noise transmission for walls		
65		– Exterior noise transmission for windows		
66	5.507.4.2	Exterior noise transmission performance method		

As a covered entity under Title II of the Americans with Disabilities Act, the City of Los Angeles does not discriminate on the basis of disability and, upon request, will provide reasonable accommodation to ensure equal access to its programs, services and activities.

LA DBS DEPARTMENT OF BUILDING AND SAFETY

2023 Los Angeles Green Building Code

FORM GRN 5

ITEM #	CODE SECTION	REQUIREMENT	REFERENCE SHEET (Sheet # or N/A)	COMMENTS (e.g. note #, detail # or reason for N/A)
67	5.507.4.3	Interior sound transmission		
68	5.508.1	Ozone depletion and greenhouse gas reductions		
69	5.508.2	Supermarket refrigerant leak reduction		

As a covered entity under Title II of the Americans with Disabilities Act, the City of Los Angeles does not discriminate on the basis of disability and, upon request, will provide reasonable accommodation to ensure equal access to its programs, services and activities.

NO.	DATE	DRAWN	REVISIONS -	CHK'D	APP'D
A	3/20/25	-	30 % CONCEPT DESIGN		
B	4/25/25	-	FINAL CONCEPT DESIGN		
C	7/18/25	-	40 % DESIGN		
D	9/19/25	-	80% DESIGN		

NOT FOR CONSTRUCTION

80% DESIGN

Jacobs
2600 MICHELSON DRIVE, SUITE 500
IRVINE, CA 92612
T: (949) 224-7500
F: (949) 224-7501

LICENSED ARCHITECT — ROBERT D. SMITH — C-24299 — 02/28/ 2027 RENEWAL DATE — STATE OF CALIFORNIA

SCALE: AS SHOWN
DRAWN: A. TERMYNA
CHECKED: D. WINSTEAD
DESIGNED: R. SMITH
ENGINEER / ARCHITECT

TERMINAL ISLAND MARITIME SUPPORT FACILITY

LADBS GREEN BUILDING CODE CHECKLIST

THE PORT OF LOS ANGELES
ENGINEERING DIVISION
425 S. PALOS VERDES STREET SAN PEDRO CA 90731-3309

DRAWING NUMBER 1-3513

SHEET NUMBER A-0.11

RVT: Autodesk Docs://US CA_D3371901_PDLA TIMSF1-3513-JEIS-12-A_VitalRoom_R25.rvt
DATE: 9/19/2025 5:14:21 PM

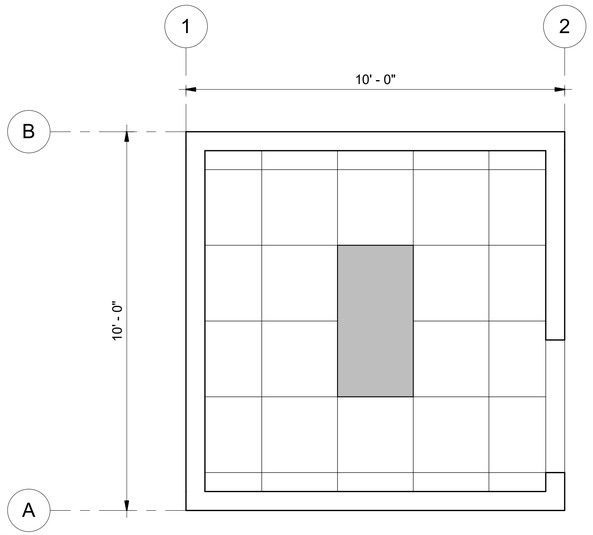

4A-1.0 / A-1.0 REFLECTED CEILING PLAN - SINGLE USER

SCALE: 1/2" = 1'-0"

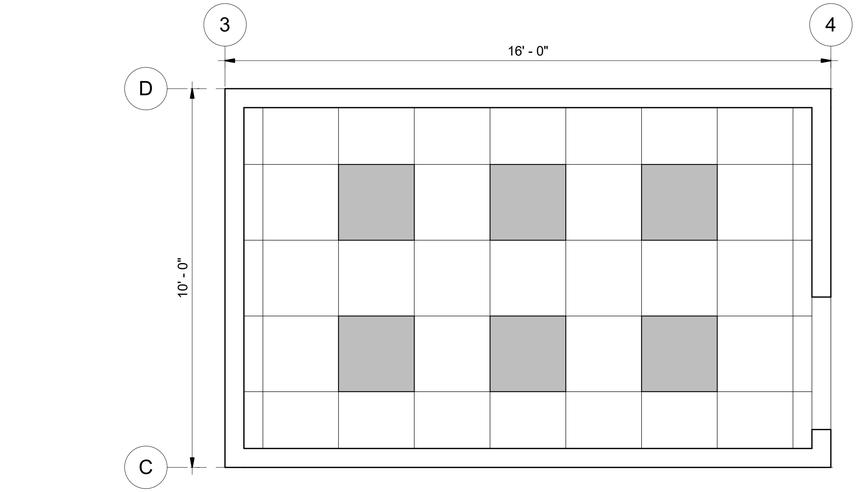

3A-1.0 / A-1.0 REFLECTED CEILING PLAN - THREE USER

SCALE: 1/2" = 1'-0"

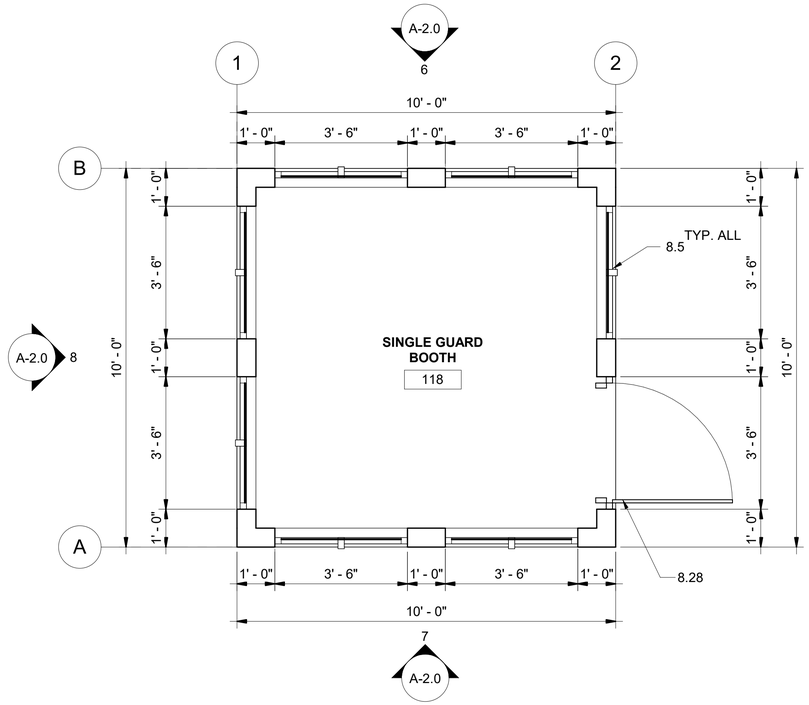

1A-1.0 / A-1.0 FLOOR PLAN - SINGLE USER GUARD BOOTH

SCALE: 1/2" = 1'-0"

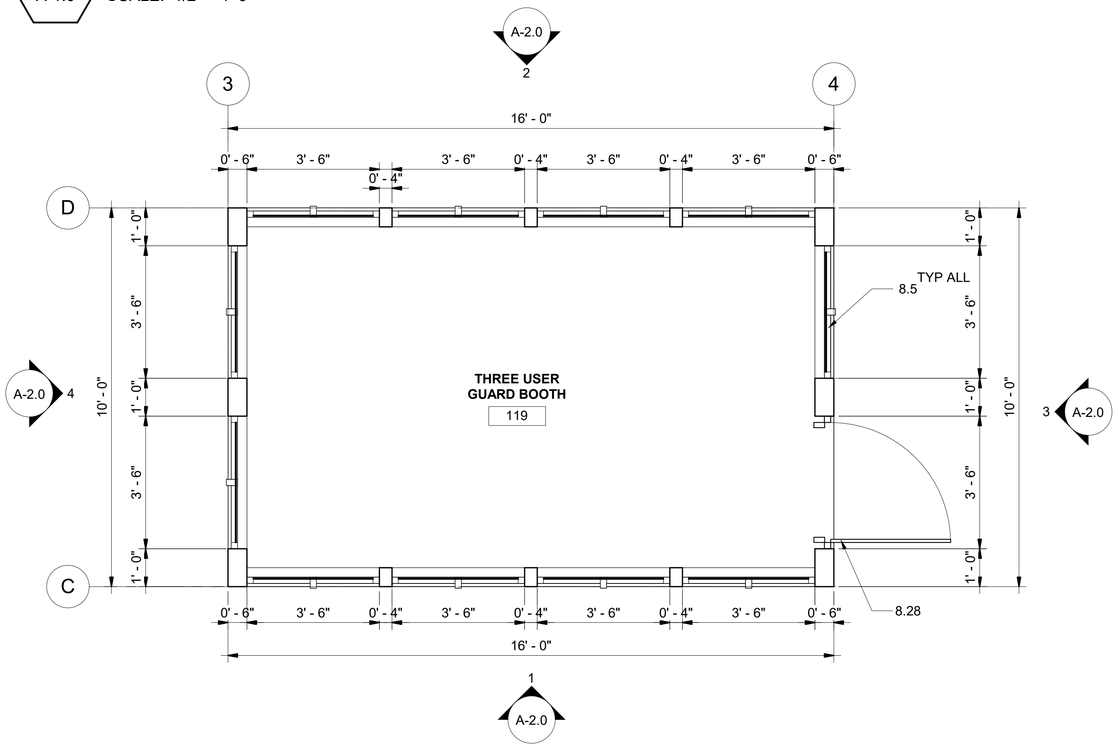

2A-1.0 / A-1.0 FLOOR PLAN - THREE USER GUARD BOOTH

SCALE: 1/2" = 1'-0"

KEYNOTES - FLOOR PLAN

#	KEYNOTE
8.5	INSULATED GLAZING UNIT WINDOW
8.28	EXTERIOR DOOR W/ GLAZING

WALL LEGEND:

WALL ASSEMBLY PER PRE-FABRICATED GUARD BOOTH MANUFACTURER

RCP LEGEND

2' X 2' SUSPENDED ACT

2' X 2' LED LIGHT FIXTURES

2' X 4' LED LIGHT FIXTURES

GENERAL NOTES:

1. DRAWINGS ON THIS SHEET ARE INTENDED TO SHOW MINIMUM SIZE & QUALITY REQUIREMENTS FOR PRE-FABRICATED GUARD BOOTHS THAT ARE PART OF THE PROJECT SCOPE. THESE ARE NOT INTENDED TO BE USED AS CONSTRUCTION DOCUMENTS.

N

NO.	DATE	DRAWN	REVISIONS -
A	3/20/25	-	30 % CONCEPT DESIGN
B	4/25/25	-	FINAL CONCEPT DESIGN
C	7/18/25	-	40 % DESIGN
D	9/19/25	-	80% DESIGN

NOT FOR CONSTRUCTION

80% DESIGN

Jacobs
2600 MICHELSON DRIVE, SUITE 500
IRVINE, CA 92612
T: (949) 224-7500
F: (949) 224-7501

LICENSED ARCHITECT ROBERT G. SMITH C-24259 02/28/27 RENEWAL STATE OF CALIFORNIA

SCALE:	AS SHOWN
DRAWN:	A. TERMYNA
CHECKED:	D. WINSTEAD
DESIGNED:	R. SMITH
	ENGINEER / ARCHITECT

TERMINAL ISLAND MARITIME SUPPORT FACILITY

FLOOR PLAN & RCP - GUARD BOOTH

THE PORT OF LOS ANGELES
ENGINEERING DIVISION
425 S. PALOS VERDES STREET SAN PEDRO CA 90731-3309

DRAWING NUMBER 1-3513

SHEET NUMBER A-1.0

RVT: Autodesk Docs://US CA_D3037190_POLA TIMSF\1-3513-JEDI-10-A_Guard Booths_R25.rvt
DATE: 9/19/2025 2:17:34 PM

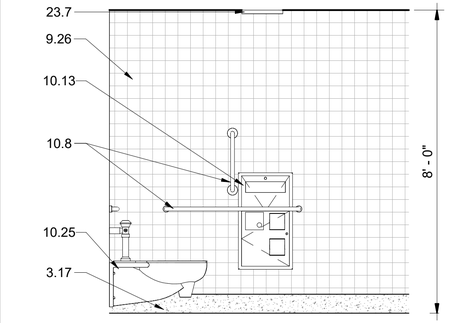

5A-1.1 / A-1.1

TYP. TOILET ELEVATION

SCALE: 1/2" = 1'-0"

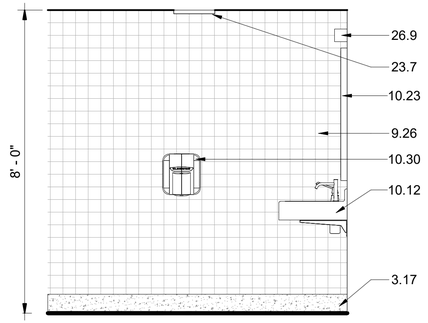

6A-1.1 / A-1.1

TYP. LAVATORY ELEVATION

SCALE: 1/2" = 1'-0"

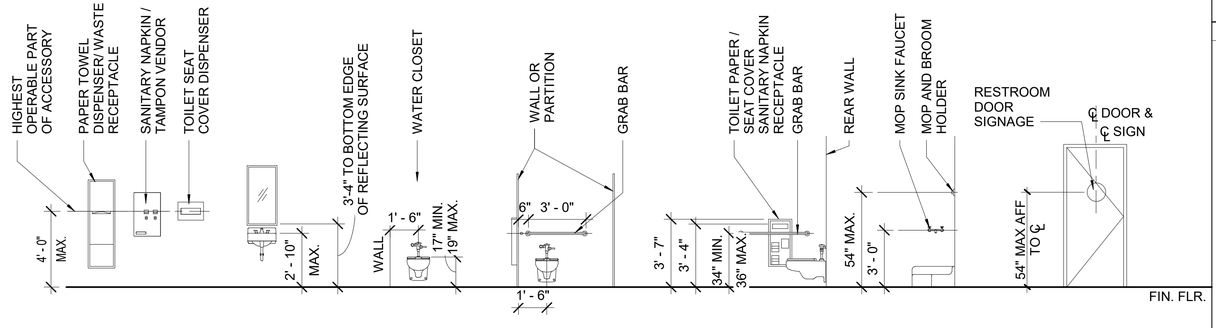

7A-1.1 / A-1.1

ACCESSIBLE MOUNTING HEIGHTS AND CLEARANCES

SCALE: 1/4" = 1'-0"

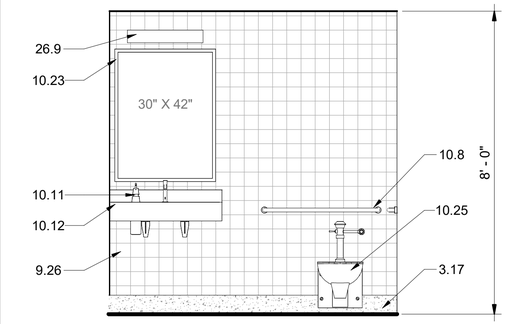

4A-1.1 / A-1.1

TYP. RESTROOM ELEVATION

SCALE: 1/2" = 1'-0"

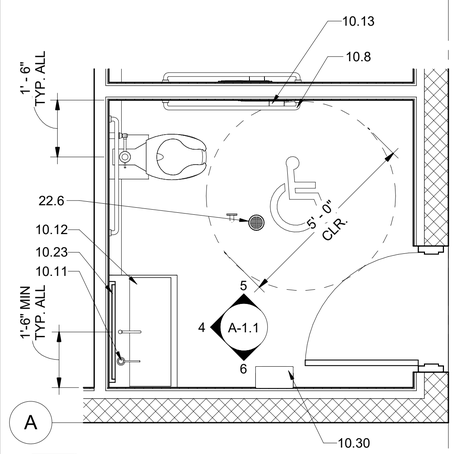

3A-1.1 / A-1.1

TYP. ENLARGED UNISEX RESTROOM

SCALE: 1/2" = 1'-0"

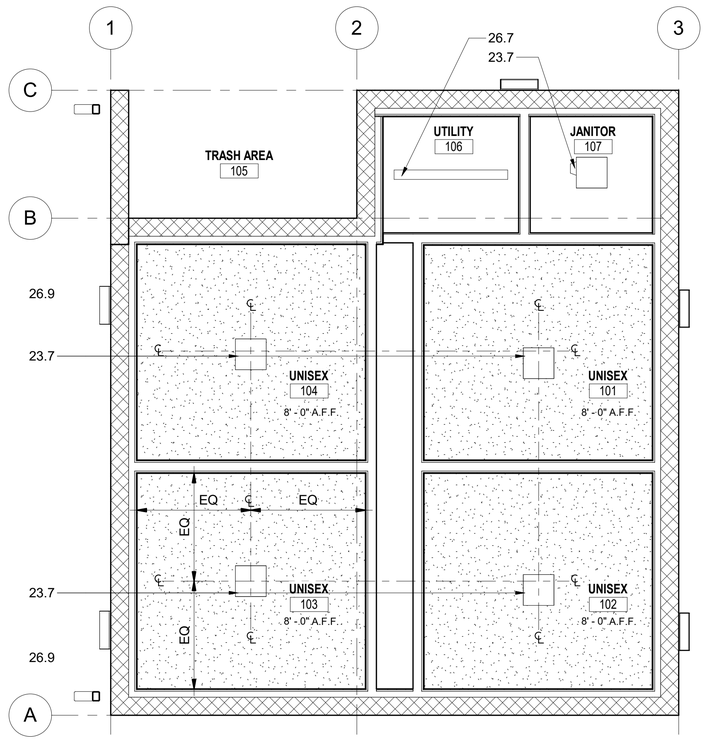

2A-1.1 / A-1.1

RESTROOM BUILDING - REFLECTED CEILING PLAN

SCALE: 3/8" = 1'-0"

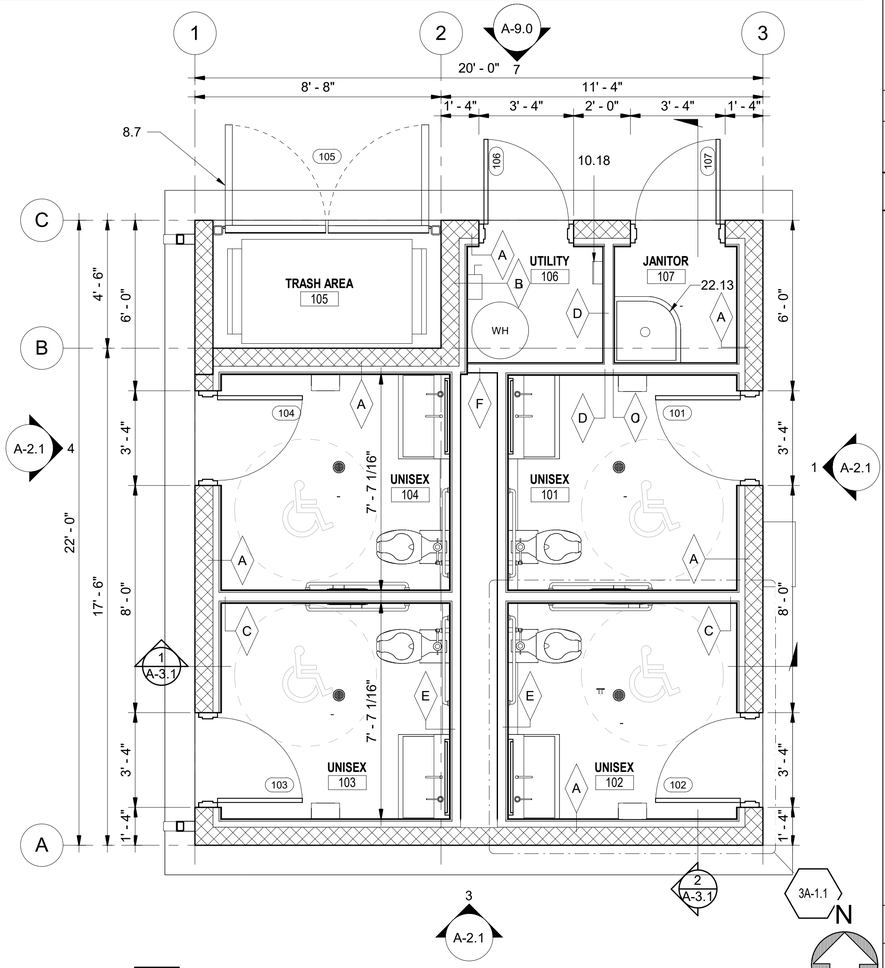

1A-1.1 / A-1.1

RESTROOM BUILDING - OVERALL FLOOR PLAN

SCALE: 3/8" = 1'-0"

KEYNOTES - FLOOR PLAN

#	KEYNOTE
3.17	6" CONCRETE CURB
8.7	TRASH ENCLOSURE GATE W/ CANE BOLT AT EACH GATE
9.26	PORCELAIN WALL TILE, REFER TO INTERIORS FOR FINISHES
10.8	GRAB BAR
10.11	COUNTERTOP MOUNTED SOAP DISPENSER
10.12	STAINLESS STEEL LAVATORY
10.13	RECESSED COMBO TOILET PAPER DISPENSER, SEAT COVER DISPENSER, AND WASTE RECEPTACLE
10.18	SURFACE MOUNTED FIRE EXTINGUISHER AND CABINET
10.23	MIRROR, SIZE AS INDICATED
10.25	STAINLESS STEEL WALL MOUNTED TOILET
10.30	ELECTRIC HAND DRYER
22.6	FLOOR DRAIN
22.13	MOP SINK
23.7	VENT PIPE WITH CAP, SEE MECHANICAL DRAWINGS
26.7	LINEAR LIGHT FIXTURE
26.9	WALL MOUNTED LIGHT FIXTURE

RCP LEGEND

GYPSUM BOARD CEILING ON METAL STUD

WALL LEGEND:

- A: 8" CMU FULLY GROUTED, 2 1/2" 25 GA. METAL STUD @ 24" OC , MINERAL WOOL INSULATION, 5/8" WATER RESISTANT BACKING BOARD & TILE FINISH; STUD & FINISH LAYERS BUILT ON 6" CONCRETE CURB.
- B: 8" CMU FULLY GROUTED, 2 1/2" 25 GA. METAL STUD @ 24" OC , 5/8" GYPSUM BOARD, MINERAL WOOL INSULATION; STUD & FINISH LAYER BUILT ON 6" CONCRETE CURB.
- C: 3 5/8" 25 GA METAL STUD @ 24" OC, 5/8" WATER RESISTANT BACKING BOARD, MINERAL WOOL INSULATION & 3/8" TILE FINISH BOTH SIDES; WALL BUILT ON 6" CONCRETE CURB.
- D: 3 5/8" 25 GA METAL STUD @ 24" OC, MINERAL WOOL INSULATION, 5/8" WATER RESISTANT BACKING BOARD & 3/8" TILE FINISH ONE SIDE, 5/8" GYPSUM BOARD OPP. SIDE; WALL BUILT ON 6" CONCRETE CURB.
- E: 3 5/8" 25 GA METAL STUD @ 24" OC, MINERAL WOOL INSULATION, 5/8" WATER RESISTANT BACKING BOARD & 3/8" TILE FINISH ONE SIDE; WALL BUILT ON 6" CONCRETE CURB.
- F: 3 5/8" 25 GA METAL STUD @ 24" OC, MINERAL WOOL INSULATION, 5/8" GYPSUM BOARD ONE SIDE; WALL BUILT ON 6" CONCRETE CURB.

GENERAL NOTES:

1. FOR ITEMS NOT DIMENSIONED IN ENLARGED RESTROOM PLANS, REFER TO SHEET A-0.6 & A-0.7 FOR APPLICABLE ABA STANDARD DIMENSIONS.
2. ALL INTERIOR WALLS TO EXTEND TO UNDERSIDE OF ROOF DECK U.N.O.

NO.	DATE	DRAWN	REVISIONS -	CHK'D	APP'D
A	3/20/25	-	30 % CONCEPT DESIGN		
B	4/25/25	-	FINAL CONCEPT DESIGN		
C	7/18/25	-	40 % DESIGN		
D	9/19/25	-	80% DESIGN		

NOT FOR CONSTRUCTION

80% DESIGN

Jacobs
2600 MICHELSON DRIVE, SUITE 500
IRVINE, CA 92612
T: (949) 224-7500
F: (949) 224-7501

LICENSED ARCHITECT — REGISTERED PROFESSIONAL — C 24239 — 02/28/2027 — RENEWAL DATE — STATE OF CALIFORNIA

SCALE:	AS SHOWN
DRAWN:	A. TERMYNA
CHECKED:	D. WINSTEAD
DESIGNED:	R. SMITH
	ENGINEER / ARCHITECT

TERMINAL ISLAND MARITIME SUPPORT FACILITY

PLANS, RCP, & INT. ELEV. - RESTROOM BUILDING

THE PORT OF LOS ANGELES
ENGINEERING DIVISION
425 S. PALOS VERDES STREET SAN PEDRO CA 90731-3309

DRAWING NUMBER	SHEET NUMBER
1-3513	A-1.1

RVT: Autodesk Docs://18 CA_D3377 1901_POLA TMSBT/1-3513-IEG-12-A_WaterRoom_R25.rvt
DATE: 9/19/2025 2:14:23 PM

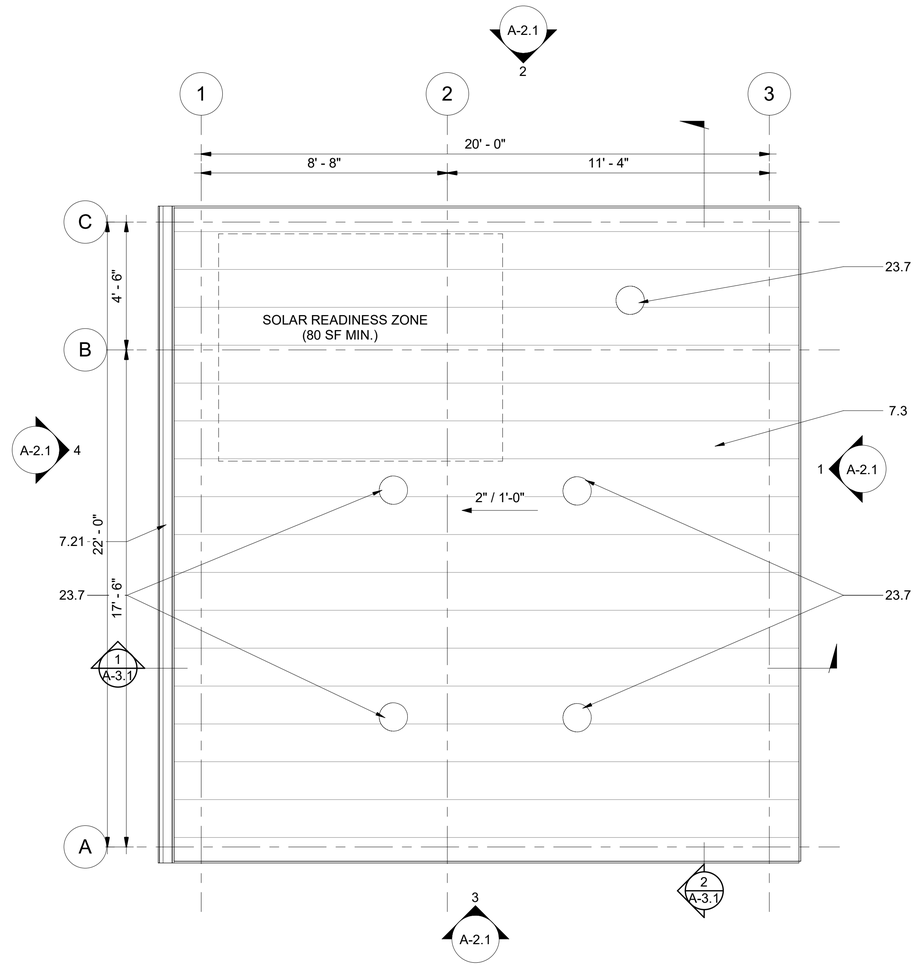

1A-1.2
A-1.2

RESTROOM BUILDING - OVERALL ROOF PLAN

SCALE: 3/8" = 1'-0"

KEYNOTES - FLOOR PLAN

#	KEYNOTE
7.3	STANDING SEAM METAL ROOF
7.21	5" STAINLESS STEEL BOX GUTTER, PAINT TO MATCH STANDING SEAM MEATL ROOFING
23.7	VENT PIPE WITH CAP, SEE MECHANICAL DRAWINGS

GENERAL NOTES:

ROOF PANEL: 24 GAUGE, 16 INCH WIDE PENCIL RIB STANDING SEAM METAL ROOFING PANELS
COLOR: LINEN WHITE
SOLAR REFLECTANCE INDEX: 89

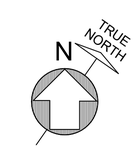

NO.	DATE	DRAWN	REVISIONS -	CHK'D	APP'D
A	3/20/25	-	30 % CONCEPT DESIGN		
B	4/25/25	-	FINAL CONCEPT DESIGN		
C	7/18/25	-	40 % DESIGN		
D	9/19/25	-	80% DESIGN		

NOT FOR CONSTRUCTION

NO.	DATE	DRAWN	REVISIONS -	CHK'D	APP'D

80% DESIGN

Jacobs
2600 MICHELSON DRIVE, SUITE 500
IRVINE, CA 92612
T: (949) 224-7500
F: (949) 224-7501

LICENSED ARCHITECT
ROBERT G. SMITH
C-24258
02/28/2027
RENEWAL DATE
STATE OF CALIFORNIA

SCALE: AS SHOWN
DRAWN: A. TERMYNA
CHECKED: D. WINSTEAD
DESIGNED: R. SMITH
ENGINEER / ARCHITECT

TERMINAL ISLAND MARITIME SUPPORT FACILITY

ROOF PLAN - RESTROOM BUILDING

THE PORT OF LOS ANGELES
ENGINEERING DIVISION
425 S. PALOS VERDES STREET SAN PEDRO CA 90731-3309

DRAWING NUMBER 1-3513
SHEET NUMBER A-1.2

RVT: Autodesk Docs://US CA_D3371901_POLA TIMSF/1-3513-JEG-12-A_WashRoom_R25.rvt
DATE: 9/15/2025 2:14:23 PM

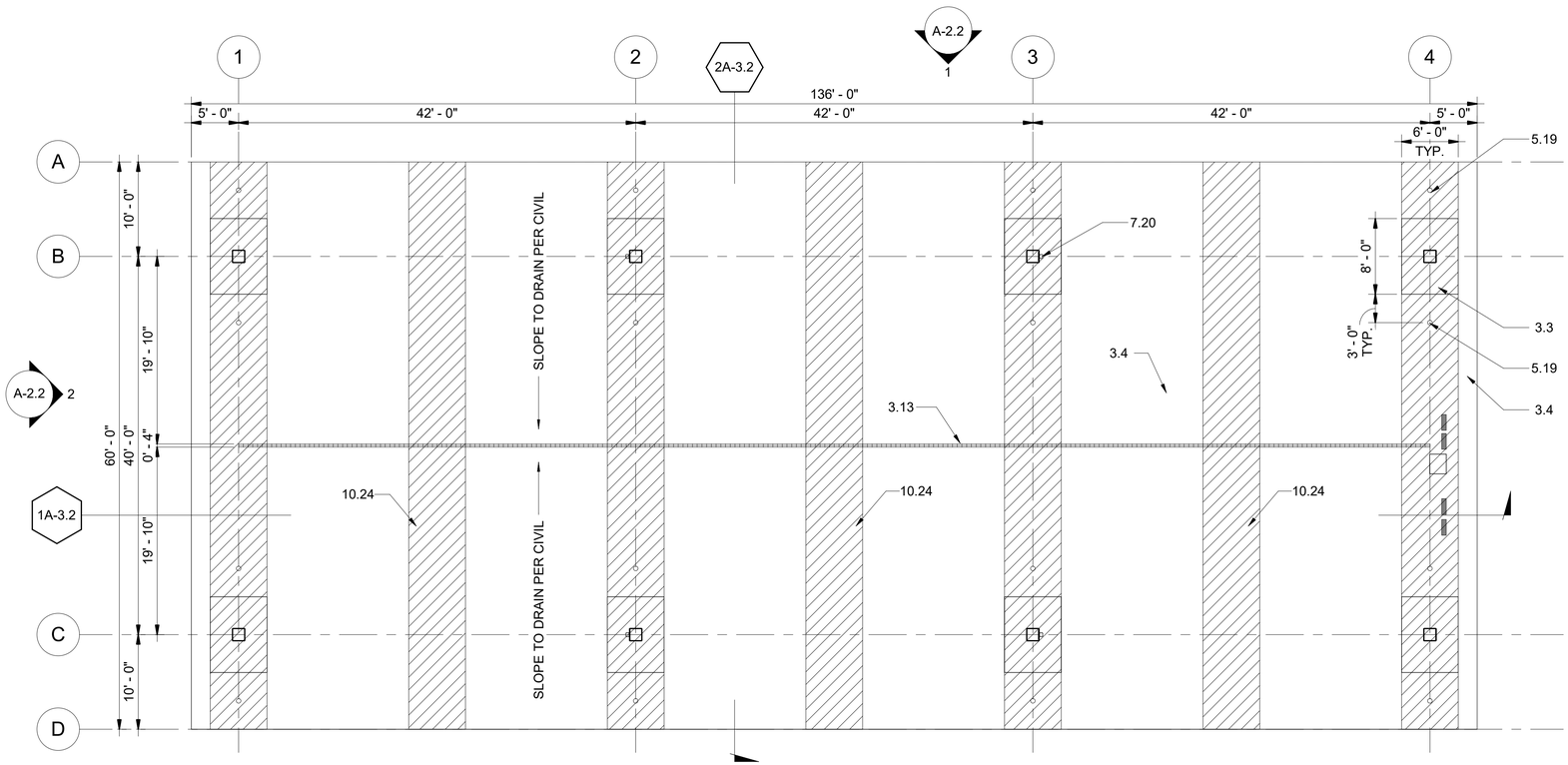

1A-1.3
A-1.3

ROADABILITY CANOPY - FLOOR PLAN

SCALE: 1/8" = 1'-0"

KEYNOTES - FLOOR PLAN

#	KEYNOTE
3.3	1'-0" HIGH CONCRETE COLUMN BASE
3.4	ASPHALT PAVEMENT, SLOPED TO TRENCH DRAIN
3.13	TRENCH DRAIN WITH STEEL GRATE; REFER TO STRUCTURAL
5.19	PIPE BOLLARD PAINTED OSHA YELLOW, TYP.
7.20	4" X 5" STAINLESS STEEL DOWNSPOUT, PAINTED
10.24	STRIPING TO DEFINE WORK AREA BETWEEN DRIVE AISLES

GENERAL NOTES:

N

NO.	DATE	DRAWN	REVISIONS -	CHK'D	APP'D
A	3/20/25	-	30 % CONCEPT DESIGN		
B	4/25/25	-	FINAL CONCEPT DESIGN		
C	7/18/25	-	40 % DESIGN		
D	9/19/25	-	80% DESIGN		

NOT FOR CONSTRUCTION

NO.	DATE	DRAWN	REVISIONS -	CHK'D	APP'D

80% DESIGN

Jacobs
2600 MICHELSON DRIVE, SUITE 500
IRVINE, CA 92612
T: (949) 224-7500
F: (949) 224-7501

LICENSED ARCHITECT
STATE OF CALIFORNIA
C-22258
02/26/2027
REGISTRAR
DATE

SCALE: AS SHOWN
DRAWN: A. TERMYNA
CHECKED: D. WINSTEAD
DESIGNED: R. SMITH
ENGINEER / ARCHITECT

TERMINAL ISLAND MARITIME SUPPORT FACILITY

FLOOR PLAN - ROADABILITY CANOPY

THE PORT OF LOS ANGELES
ENGINEERING DIVISION
425 S. PALOS VERDES STREET SAN PEDRO CA 90731-3309

DRAWING NUMBER 1-3513
SHEET NUMBER A-1.3

RVT: Autodesk Docs://US CA_D3371901_POLA TIMSF/1-3513-JEG-11-A_Roadability Canopy_R25.rvt
DATE: 9/19/2025 2:52:32 PM

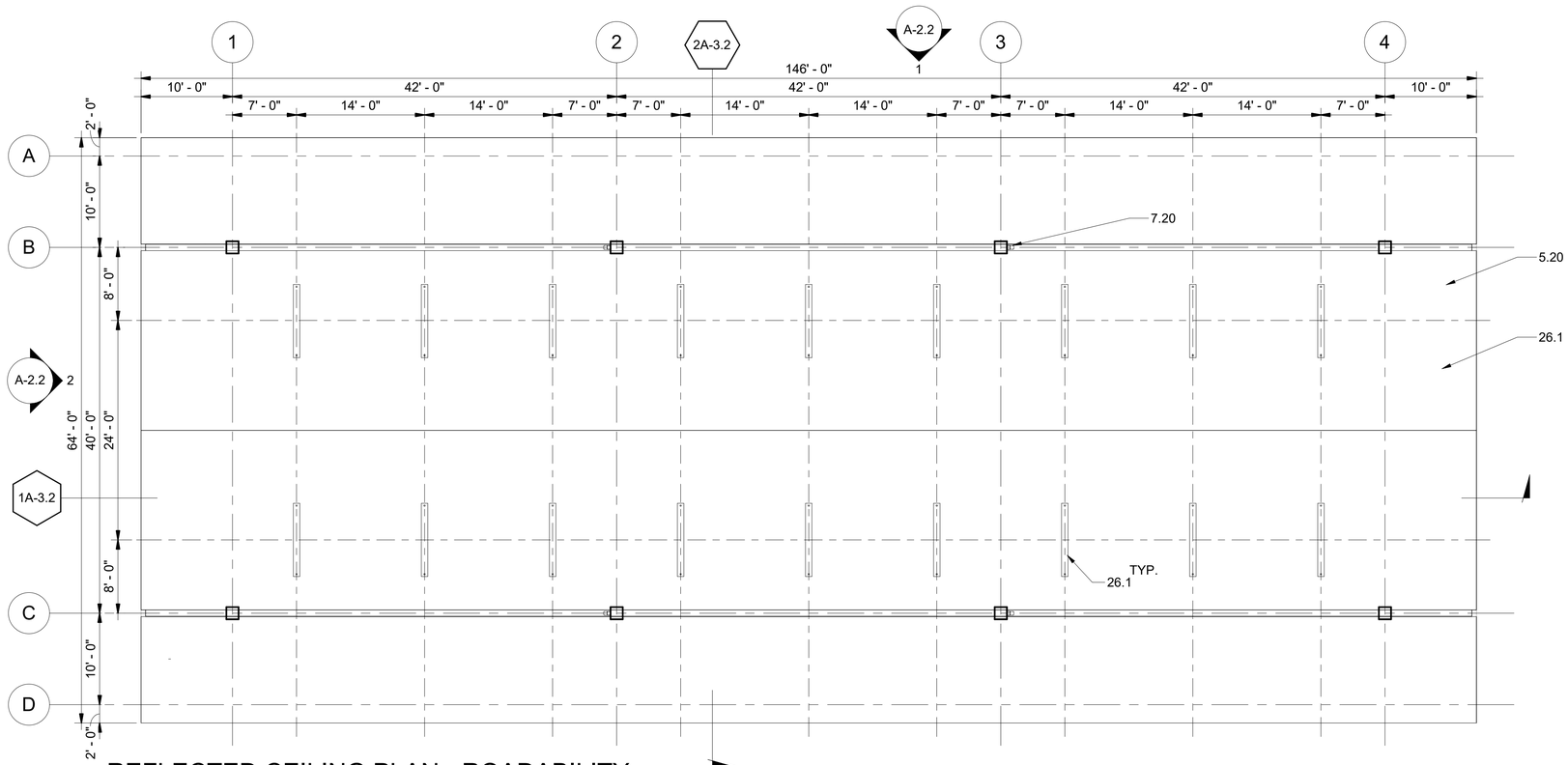

1A-1.4
A-1.4

REFLECTED CEILING PLAN - ROADABILITY CANOPY

SCALE: 1/8" = 1'-0"

KEYNOTES - RCP

#	KEYNOTE
5.20	METAL ROOF DECK, PAINTED
7.20	4" X 5" STAINLESS STEEL DOWNSPOUT, PAINTED
26.1	LIGHT FIXTURES UNDER CANOPY, SEE ELECTRICAL

RCP LEGEND

SUSPENDED LIGHTING FIXTURE; SEE ELECTRICAL DRAWINGS

EXPOSED UNDERSIDE OF ROOF DECK

GENERAL NOTES:

1. SEE ELECTRICAL DRAWINGS FOR LIGHTING REQUIREMENTS AND CALCULATIONS.

N

NO.	DATE	DRAWN	REVISIONS -	CHK'D	APP'D
A	3/20/25	-	30 % CONCEPT DESIGN		
B	4/25/25	-	FINAL CONCEPT DESIGN		
C	7/18/25	-	40 % DESIGN		
D	9/19/25	-	80% DESIGN		

NOT FOR CONSTRUCTION

NO.	DATE	DRAWN	REVISIONS -	CHK'D	APP'D

80% DESIGN

Jacobs
2600 MICHELSON DRIVE, SUITE 500
IRVINE, CA 92612
T: (949) 224-7500
F: (949) 224-7501

LICENSED ARCHITECT
STATE OF CALIFORNIA
C-24258
02/26/2027
REGISTRAR
DATE

SCALE: AS SHOWN
DRAWN: A. TERMYNA
CHECKED: D. WINSTEAD
DESIGNED: R. SMITH
ENGINEER / ARCHITECT

TERMINAL ISLAND MARITIME SUPPORT FACILITY

REFLECTED CEILING PLAN - ROADABILITY CANOPY

THE PORT OF LOS ANGELES
ENGINEERING DIVISION
425 S. PALOS VERDES STREET SAN PEDRO CA 90731-3309

DRAWING NUMBER 1-3513
SHEET NUMBER A-1.4

RVT: Autodesk Docs://US CA_D3371901_POLA TIMSF/1-3513-JEG-11-A_Roadability Canopy_R25.rvt
DATE: 9/19/2025 2:52:32 PM

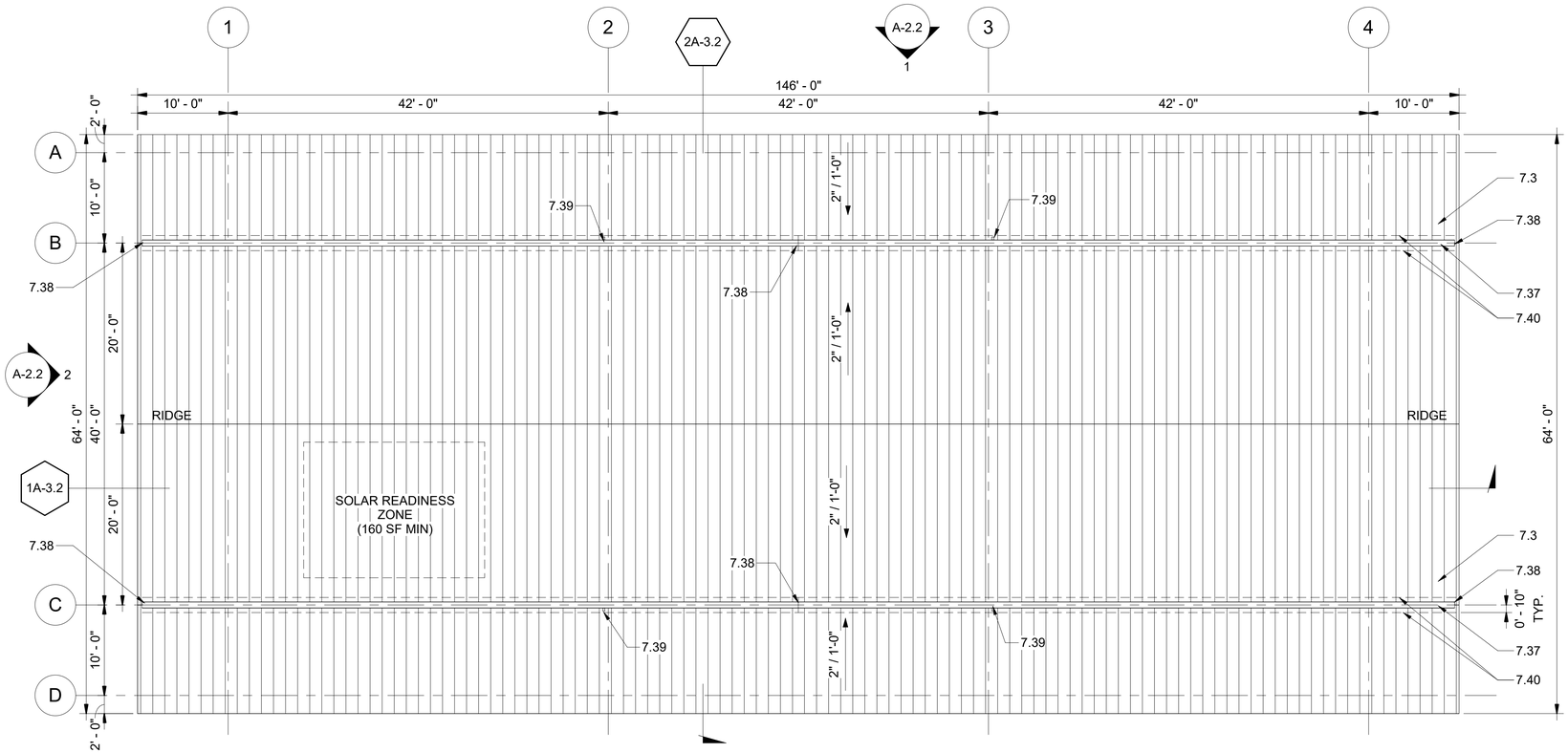

1A-1.5
A-1.5

ROADABILITY CANOPY - ROOF PLAN

SCALE: 1/8" = 1'-0"

KEYNOTES - FLOOR PLAN

#	KEYNOTE
7.3	STANDING SEAM METAL ROOF
7.37	20" WIDE X 4" DEEP BOX GUTTER, PAINTED
7.38	HIGH POINT OF GUTTER; SLOPE TO DOWNSPOUT
7.39	DOWNSPOUT TO STORM DRAIN BELOW
7.40	EXTENT OF METAL GUTTER BELOW STANDING SEAM METAL ROOF

GENERAL NOTES:

ROOF PANEL: 24 GAUGE, 16 INCH WIDE PENCIL RIB STANDING SEAM METAL ROOFING PANELS
COLOR: LINEN WHITE
SOLAR REFLECTANCE INDEX: 89

N TRUE NORTH

NO.	DATE	DRAWN	REVISIONS -	CHK'D	APP'D
A	3/20/25	-	30 % CONCEPT DESIGN		
B	4/25/25	-	FINAL CONCEPT DESIGN		
C	7/18/25	-	40 % DESIGN		
D	9/19/25	-	80% DESIGN		

NOT FOR CONSTRUCTION

NO.	DATE	DRAWN	REVISIONS -	CHK'D	APP'D

80% DESIGN

Jacobs
2600 MICHELSON DRIVE, SUITE 500
IRVINE, CA 92612
T: (949) 224-7500
F: (949) 224-7501

LICENSED ARCHITECT
STATE OF CALIFORNIA
02/26/2027

SCALE: AS SHOWN
DRAWN: A. TERMYNA
CHECKED: D. WINSTEAD
DESIGNED: R. SMITH
ENGINEER / ARCHITECT

TERMINAL ISLAND MARITIME SUPPORT FACILITY

ROOF PLAN - ROADABILITY CANOPY

THE PORT OF LOS ANGELES
ENGINEERING DIVISION
425 S. PALOS VERDES STREET SAN PEDRO CA 90731-3309

DRAWING NUMBER 1-3513
SHEET NUMBER A-1.5

RVT: Autodesk Docs://US CA_D3371901_POLA TIMSF/1-3513-JEG-11-A_Roadability Canopy_R25.rvt
DATE: 9/19/2025 2:52:32 PM

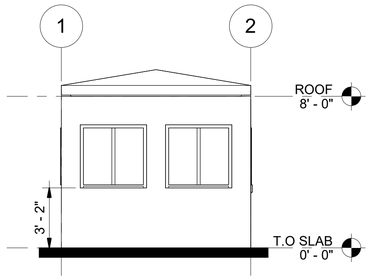

7A-2.0 / A-2.0 SINGLE P. BOOTH - SOUTH ELEV.
SCALE: 1/4" = 1'-0"

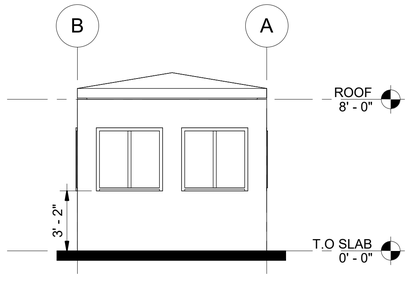

8A-2.0 / A-2.0 SINGLE P. BOOTH - WEST ELEV.
SCALE: 1/4" = 1'-0"

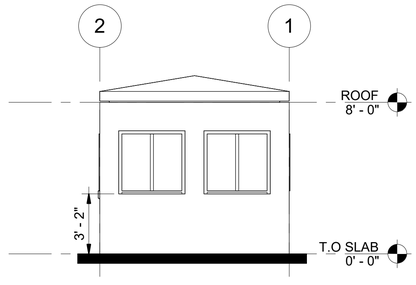

6A-2.0 / A-2.0 SINGLE P. BOOTH - NORTH ELEV.
SCALE: 1/4" = 1'-0"

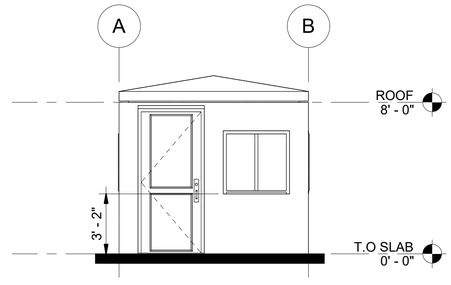

5A-2.0 / A-2.0 SINGLE P. BOOTH - EAST ELEV.
SCALE: 1/4" = 1'-0"

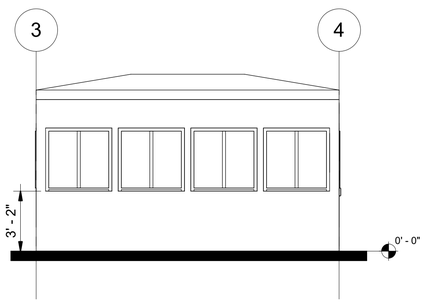

1A-2.0 / A-2.0 THREE P. BOOTH - SOUTH ELEV.
SCALE: 1/4" = 1'-0"

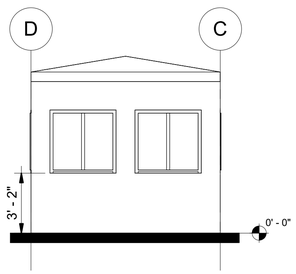

4A-2.0 / A-2.0 THREE P. BOOTH - WEST ELEV.
SCALE: 1/4" = 1'-0"

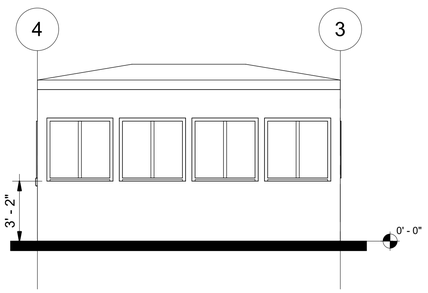

2A-2.0 / A-2.0 THREE P. BOOTH - NORTH ELEV.
SCALE: 1/4" = 1'-0"

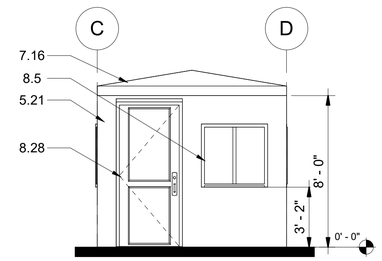

3A-2.0 / A-2.0 THREE P. BOOTH - EAST ELEV.
SCALE: 1/4" = 1'-0"

KEYNOTES - ELEVATION

#	KEYNOTE
5.21	INSULATED METAL PANEL PER GUARD BOOTH MANUFACTURER, TYP.
7.16	STANDING SEAM INSULATED METAL ROOF PANELS
8.5	INSULATED GLAZING UNIT WINDOW
8.28	EXTERIOR DOOR W/ GLAZING

GENERAL NOTES:

1. DRAWINGS ON THIS SHEET ARE INTENDED TO SHOW MINIMUM SIZE & QUALITY REQUIREMENTS FOR PRE-FABRICATED GUARD BOOTHS THAT ARE PART OF THE PROJECT SCOPE. THESE ARE NOT INTENDED TO BE USED AS CONSTRUCTION DOCUMENTS.
2. KEYNOTES TYP. OF ALL VIEWS ON THIS SHEET.

NO.	DATE	DRAWN	REVISIONS -	CHK'D	APP'D
A	3/20/25	-	30 % CONCEPT DESIGN		
B	4/25/25	-	FINAL CONCEPT DESIGN		
C	7/18/25	-	40 % DESIGN		
D	9/19/25	-	80% DESIGN		

NOT FOR CONSTRUCTION

NO.	DATE	DRAWN	REVISIONS -	CHK'D	APP'D

80% DESIGN

Jacobs
2600 MICHELSON DRIVE, SUITE 500
IRVINE, CA 92612
T: (949) 224-7500
F: (949) 224-7501

LICENSED ARCHITECT
ROBERT G. SMITH
C-24258
02/28/2027
REGISTRAR DATE
STATE OF CALIFORNIA

SCALE: AS SHOWN
DRAWN: A. TERMYNA
CHECKED: D. WINSTEAD
DESIGNED: R. SMITH
ENGINEER / ARCHITECT

TERMINAL ISLAND MARITIME SUPPORT FACILITY

BUILDING ELEVATIONS - GUARD BOOTH

THE PORT OF LOS ANGELES
ENGINEERING DIVISION
425 S. PALOS VERDES STREET SAN PEDRO CA 90731-3309

DRAWING NUMBER 1-3513
SHEET NUMBER A-2.0

RVT: Autodesk Docs://US CA_D3371901_POLA TIMSF/1-3513-JEG-10-A_Guard Booths_R25.rvt
DATE: 9/15/2025 2:17:34 PM

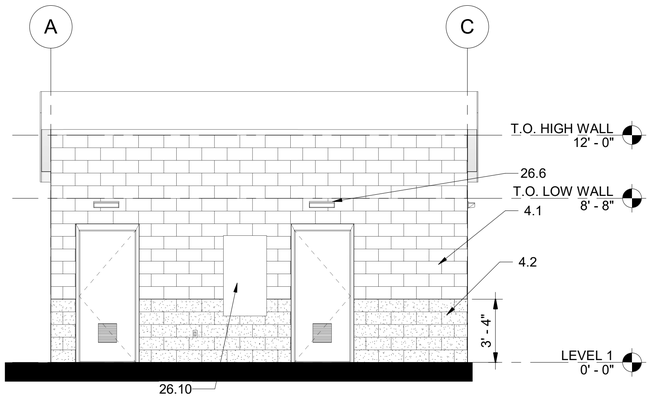

1A-2.1 / A-2.1 RESTROOM BLDG. - EAST ELEV.
SCALE: 1/4" = 1'-0"

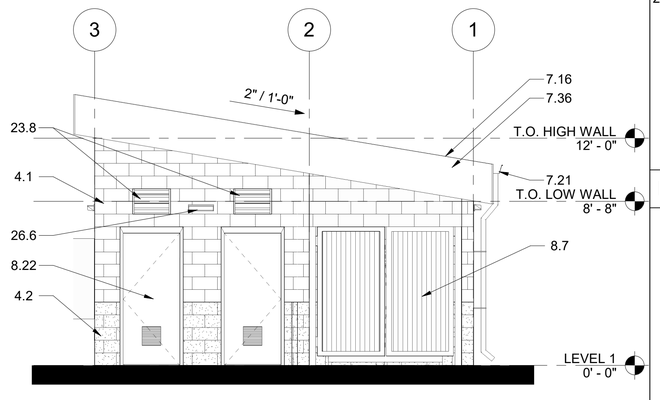

2A-2.1 / A-2.1 RESTROOM BLDG. - NORTH ELEV.
SCALE: 1/4" = 1'-0"

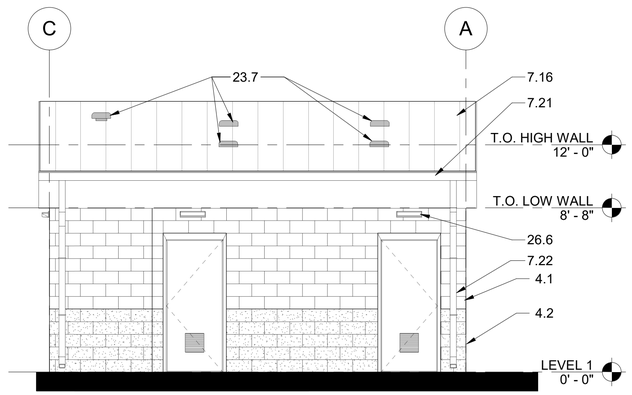

4A-2.1 / A-2.1 RESTROOM BLDG. - WEST ELEV.
SCALE: 1/4" = 1'-0"

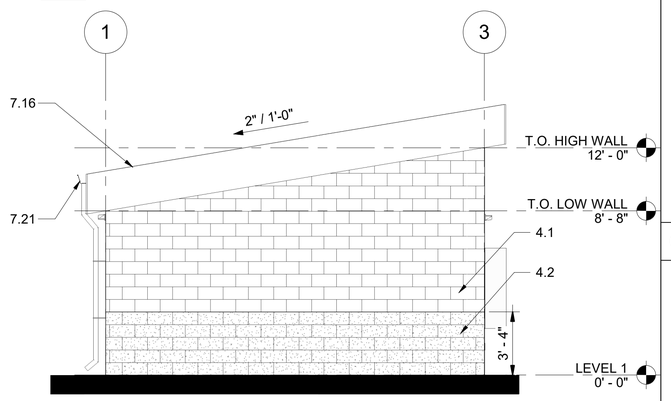

3A-2.1 / A-2.1 RESTROOM BLDG. - SOUTH ELEV.
SCALE: 1/4" = 1'-0"

KEYNOTES - ELEVATION

#	KEYNOTE
4.1	8" CMU, PRECISION FACE
4.2	8" CMU, SPLIT-FACE ACCENT
7.16	STANDING SEAM INSULATED METAL ROOF PANELS
7.21	5" STAINLESS STEEL BOX GUTTER, PAINT TO MATCH STANDING SEAM MEATL ROOFING
7.22	3" X 4" STAINLESS STEEL DOWNSPOUT, PAINTED
7.36	FIBERGLASS SHEATHING FASCIA, PAINTED
8.7	TRASH ENCLOSURE GATE W/ CANE BOLT AT EACH GATE
8.22	EXTERIOR DOOR W/ INTEGRAL LOUVER
23.7	VENT PIPE WITH CAP, SEE MECHANICAL DRAWINGS
23.8	24"X16" METAL LOUVER, PAINTED
26.6	EXTERIOR LIGHT FIXTURE, SEE ELECTRICAL
26.10	ELECTRICAL PANEL, SEE ELECTRICAL

EXT. MATERIAL LEGEND

- CMU-1 SPLIT FACE CMU
- CMU-2 PRECISION FACE CMU
- SSMR-1 STANDING SEAM METAL ROOF

GENERAL NOTES:

1. REFER TO STRUCTURAL DRAWINGS FOR STEEL FRAMING INFORMATION.

NO.	DATE	DRAWN	REVISIONS -	CHK'D	APP'D
A	3/20/25	-	30 % CONCEPT DESIGN		
B	4/25/25	-	FINAL CONCEPT DESIGN		
C	7/18/25	-	40 % DESIGN		
D	9/19/25	-	80% DESIGN		

NOT FOR CONSTRUCTION

NO.	DATE	DRAWN	REVISIONS -	CHK'D	APP'D

80% DESIGN

Jacobs
2600 MICHELSON DRIVE, SUITE 500
IRVINE, CA 92612
T: (949) 224-7500
F: (949) 224-7501

LICENSED ARCHITECT
STATE OF CALIFORNIA

SCALE: AS SHOWN
DRAWN: A. TERMYNA
CHECKED: D. WINSTEAD
DESIGNED: R. SMITH
ENGINEER / ARCHITECT

TERMINAL ISLAND MARITIME SUPPORT FACILITY

BUILDING ELEVATIONS - RESTROOM BUILDING

THE PORT OF LOS ANGELES
ENGINEERING DIVISION
425 S. PALOS VERDES STREET SAN PEDRO CA 90731-3309

DRAWING NUMBER 1-3513
SHEET NUMBER A-2.1

RVT: Autodesk Docs/US CA_D3371901_POLA TIMSF/1-3513-JEG-12-A_WashRoom_R25.rvt
DATE: 9/15/2025 2:14:25 PM

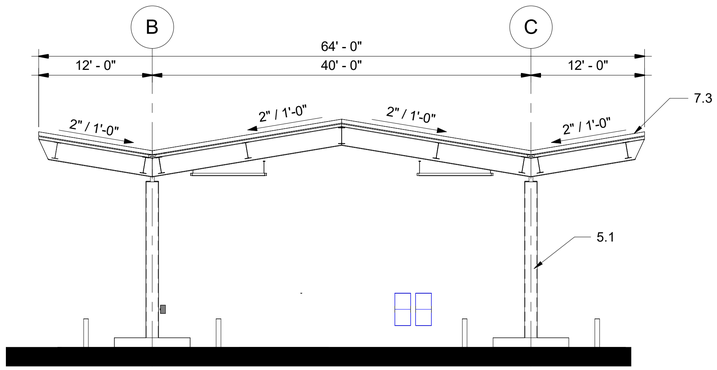

2A-2.2
A-2.2

ROADABILITY CANOPY - WEST ELEV. (EAST SIM.)

SCALE: 1/8" = 1'-0"

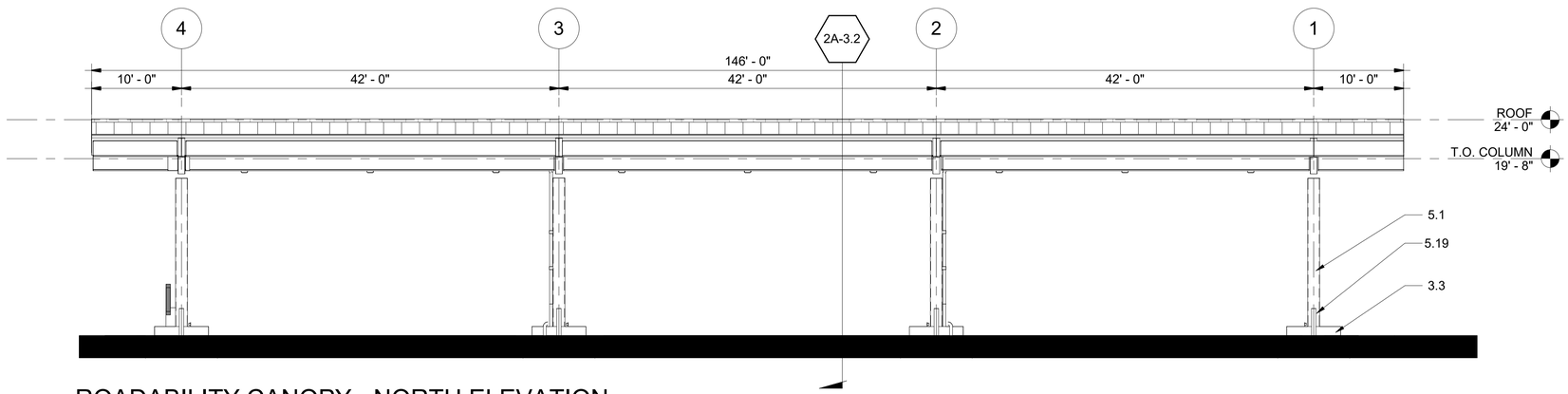

1A-2.2
A-2.2

ROADABILITY CANOPY - NORTH ELEVATION (SOUTH SIM.)

SCALE: 1/8" = 1'-0"

KEYNOTES - ELEVATION

#	KEYNOTE
3.3	1'-0" HIGH CONCRETE COLUMN BASE
5.1	STRUCTURAL SYSTEM, SEE STRUCTURAL DRAWINGS
5.19	PIPE BOLLARD PAINTED OSHA YELLOW, TYP.
7.3	STANDING SEAM METAL ROOF

GENERAL NOTES:

1. ALL EXPOSED STRUCTURE VISIBLE FROM ANY POINT MUST BE PAINTED, UNO.

NO.	DATE	DRAWN	REVISIONS -	CHK'D	APP'D
A	3/20/25	-	30 % CONCEPT DESIGN		
B	4/25/25	-	FINAL CONCEPT DESIGN		
C	7/18/25	-	40 % DESIGN		
D	9/19/25	-	80% DESIGN		

NOT FOR CONSTRUCTION

NO.	DATE	DRAWN	REVISIONS -	CHK'D	APP'D

80% DESIGN

Jacobs
2600 MICHELSON DRIVE, SUITE 500
IRVINE, CA 92612
T: (949) 224-7500
F: (949) 224-7501

LICENSED ARCHITECT
HERBERT G. SMITH
C-23258
02/26/2027
RENEWAL DATE
STATE OF CALIFORNIA

SCALE: AS SHOWN
DRAWN: A. TERMYNA
CHECKED: D. WINSTEAD
DESIGNED: R. SMITH
ENGINEER / ARCHITECT

TERMINAL ISLAND MARITIME SUPPORT FACILITY

BUILDING ELEVATIONS - ROADABILITY CANOPY

THE PORT OF LOS ANGELES
ENGINEERING DIVISION
425 S. PALOS VERDES STREET SAN PEDRO CA 90731-3309

DRAWING NUMBER 1-3513
SHEET NUMBER A-2.2

RVT: Autodesk Docs://US CA_D3371901_POLA TIMSF/1-3513-JEG-11-A_Roadability Canopy_R25.rvt
DATE: 9/19/2025 2:52:32 PM

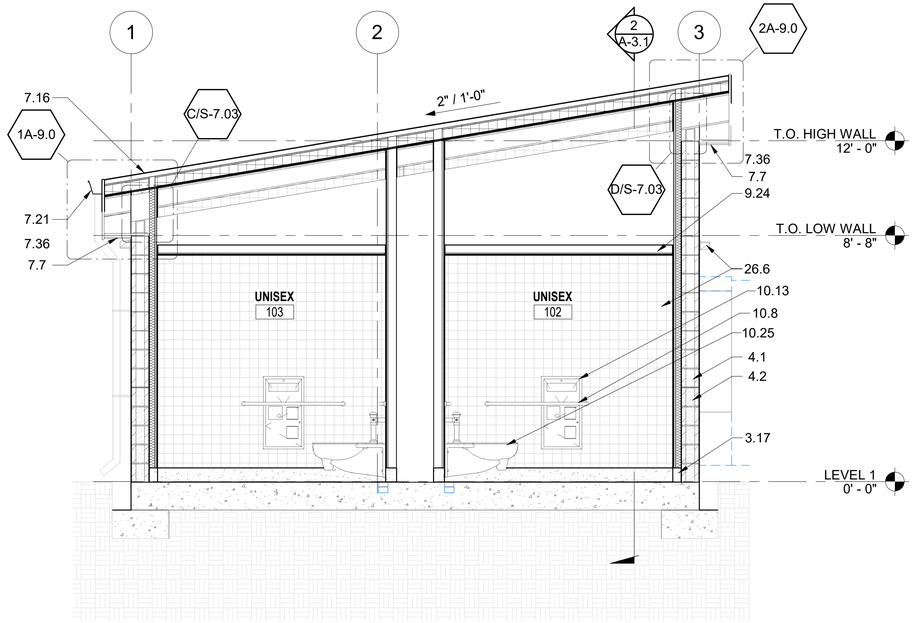

1A-3.1 / A-3.1 BUILDING CROSS SECTION
SCALE: 3/8" = 1'-0"

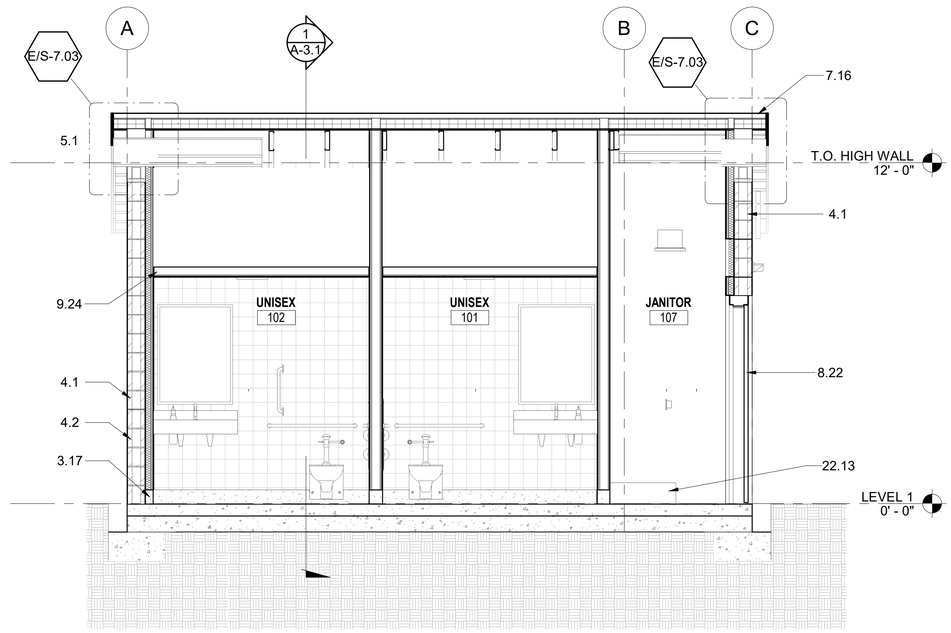

2A-3.1 / A-3.1 BUILDING LONGITUDINAL SECTION
SCALE: 3/8" = 1'-0"

KEYNOTES - ELEVATION

#	KEYNOTE
3.17	6" CONCRETE CURB
4.1	8" CMU, PRECISION FACE
4.2	8" CMU, SPLIT-FACE ACCENT
5.1	STRUCTURAL SYSTEM, SEE STRUCTURAL DRAWINGS
7.7	FIBERGLASS SHEATING SOFFIT PANEL, PAINTED
7.16	STANDING SEAM INSULATED METAL ROOF PANELS
7.21	5" STAINLESS STEEL BOX GUTTER, PAINT TO MATCH STANDING SEAM MEATL ROOFING
7.36	FIBERGLASS SHEATHING FASCIA, PAINTED
8.22	EXTERIOR DOOR W/ INTEGRAL LOUVER
9.24	HARD LID GYPSUM BOARD CEILING ON METAL STUD
9.26	PORCELAIN WALL TILE, REFER TO INTERIORS FOR FINISHES
10.8	GRAB BAR
10.13	RECESSED COMBO TOILET PAPER DISPENSER, SEAT COVER DISPENSER, AND WASTE RECEPTACLE
10.25	STAINLESS STEEL WALL MOUNTED TOILET
22.13	MOP SINK
26.6	EXTERIOR LIGHT FIXTURE, SEE ELECTRICAL

GENERAL NOTES:

1. REFER TO STRUCTURAL DRAWINGS FOR STEEL FRAMING INFORMATION.

NO.	DATE	DRAWN	REVISIONS -	CHK'D	APP'D
A	3/20/25	-	30 % CONCEPT DESIGN		
B	4/25/25	-	FINAL CONCEPT DESIGN		
C	7/18/25	-	40 % DESIGN		
D	9/19/25	-	80% DESIGN		

NOT FOR CONSTRUCTION

NO.	DATE	DRAWN	REVISIONS -	CHK'D	APP'D

80% DESIGN

Jacobs
2600 MICHELSON DRIVE, SUITE 500
IRVINE, CA 92612
T: (949) 224-7500
F: (949) 224-7501

LICENSED ARCHITECT
ROBERT G. SMITH
C-24258
02/26/2027
REGISTERED PROFESSIONAL ENGINEER
STATE OF CALIFORNIA

SCALE: AS SHOWN
DRAWN: A. TERMYNA
CHECKED: D. WINSTEAD
DESIGNED: R. SMITH
ENGINEER / ARCHITECT

TERMINAL ISLAND MARITIME SUPPORT FACILITY

BUILDING SECTIONS - RESTROOM BUILDING

THE PORT OF LOS ANGELES
ENGINEERING DIVISION
425 S. PALOS VERDES STREET SAN PEDRO CA 90731-3309

DRAWING NUMBER 1-3513
SHEET NUMBER A-3.1

RVT: Autodesk Docs://US CA_D3371901_POLA TIMSF/1-3513-JEG-12-A_WashRoom_R25.rvt
DATE: 9/19/2025 2:14:26 PM

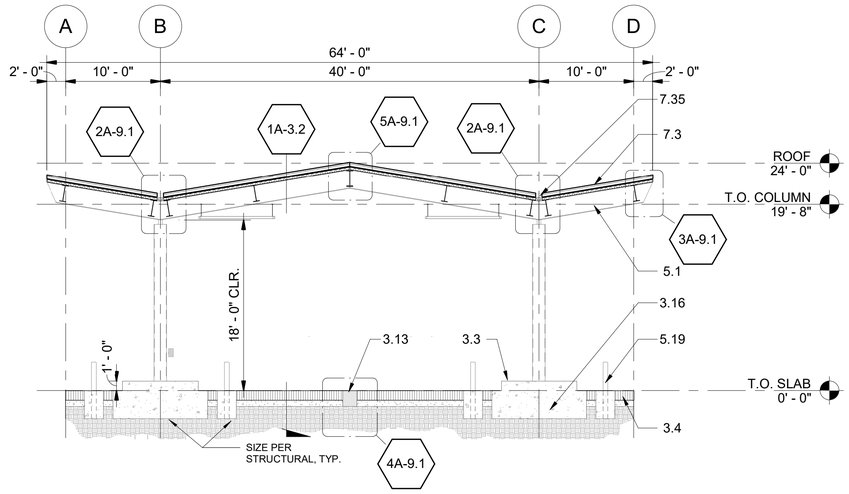

2A-3.2 / A-3.2 ROADABILITY CANOPY - CROSS SECTION

SCALE: 1/8" = 1'-0"

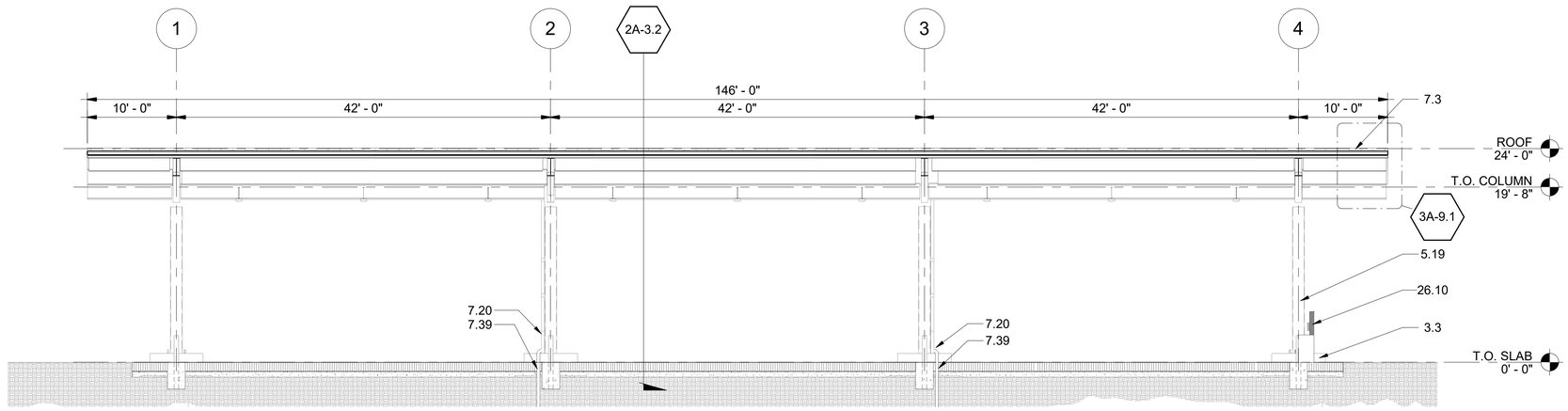

1A-3.2 / A-3.2 ROADABILITY CANOPY - LONGITUDINAL SECTION

SCALE: 1/8" = 1'-0"

KEYNOTES - FLOOR PLAN

#	KEYNOTE
3.3	1'-0" HIGH CONCRETE COLUMN BASE
3.4	ASPHALT PAVEMENT, SLOPED TO TRENCH DRAIN
3.13	TRENCH DRAIN WITH STEEL GRATE; REFER TO STRUCTURAL
3.16	FOOTINGS PER STRUCTURAL
5.1	STRUCTURAL SYSTEM, SEE STRUCTURAL DRAWINGS
5.19	PIPE BOLLARD PAINTED OSHA YELLOW, TYP.
7.3	STANDING SEAM METAL ROOF
7.20	4" X 5" STAINLESS STEEL DOWNSPOUT, PAINTED
7.35	6"W X 3"D INTERNAL BOX GUTTER, PAINTED
7.39	DOWNSPOUT TO STORM DRAIN BELOW
26.10	ELECTRICAL PANEL, SEE ELECTRICAL

GENERAL NOTES:

NO.	DATE	DRAWN	REVISIONS -
A	3/20/25	-	30 % CONCEPT DESIGN
B	4/25/25	-	FINAL CONCEPT DESIGN
C	7/18/25	-	40 % DESIGN
D	9/19/25	-	80% DESIGN

NOT FOR CONSTRUCTION

80% DESIGN

Jacobs
2600 MICHELSON DRIVE, SUITE 500
IRVINE, CA 92612
T: (949) 224-7500
F: (949) 224-7501

LICENSED ARCHITECT — JEFFREY G. MARTIN — C-24256 — 02/28/ 2027 RENEWAL — STATE OF CALIFORNIA

SCALE:	AS SHOWN
DRAWN:	A. TERMYNA
CHECKED:	D. WINSTEAD
DESIGNED:	R. SMITH
	ENGINEER / ARCHITECT

TERMINAL ISLAND MARITIME SUPPORT FACILITY

BUILDING SECTIONS - ROADABILITY CANOPY

THE PORT OF LOS ANGELES
ENGINEERING DIVISION
425 S. PALOS VERDES STREET SAN PEDRO CA 90731-3309

DRAWING NUMBER 1-3513

SHEET NUMBER A-3.2

RVT: Autodesk Docs://US CA_D3ST1901_PCOLA TIMSF1-3513-JEG-11-A_Roadability Canopy_R25.rvt
DATE: 9/19/2025 2:52:33 PM

HARDWARE SET 01

QTY	DESCRIPTION	CATALOG NUMBER	FINISH	MFR
3	Hinge, Full Mortise	T42314 x NRP	630	MK
1	Privacy Lock	L9496P 05A	626	SC
1	Door Closer	7500 x Regular Duty Arm	689	NO
1	Kick Plate	10" High	32D	QH
1	Mop Plate	6" High	32D	QH
1	Wall Stop	406 / 409 as required	626	QH
1	Threshold	Per detail x FHSL14		PE
1	Rain Guard	346C x Full Width of Frame		PE
1	Gasketing	S88BL Width x Height		PE
1	Exterior Sweep	345AV		PE

HARDWARE SET 02

QTY	DESCRIPTION	CATALOG NUMBER	FINISH	MFR
3	Hinge, Full Mortise	T42314 x NRP	630	MK
1	Storeroom/Closet Lock	L9080	626	SC
1	Cylinder as Req'd	Match client std		SC
1	Final Core	Match client std		SC
1	Surface Closer	7500	689	NO
1	Kick Plate	10"High	32D	QH
1	Door Stop	441H	626	QH
1	Threshold	Per detail x FHSL14		PE
1	Rain Guard	346C x Full Width of Frame		PE
1	Gasketing	S88BL Width x Height		PE

MK	McKinney
RO	Rockwood
PE	Pemko
OT	Other
SC	Schlage
NO	Norton
QH	Quality Hardware Company

MINIMUM PLUMBING FACILITIES (PER CBC TABLE 2902.1)

AREA	OCCUPANCY LOAD FACTOR (PER CHAPTER 10 TABLE 1004.1.2)	TOTAL	WATER CLOSETS			URINALS	LAVATORIES			DRINKING FOUNTAINS	OTHER (SERVICE SINK)
			MALE	FEMALE	UNISEX	MALE	MALE	FEMALE	UNISEX		
440 SF	100 (B)	5	1	1		0	1	1		0*	1
PROVIDED			0	0	4	0	0	0	4	0	1

* PER 410.2 SMALL OCCUPANCIES, DRINKING FOUNTAINS SHALL NOT BE REQUIRED FOR AN OCCUPANT LOAD OF 15 OR FEWER.

MALE TO FEMALE COUNT (BASED ON 50% MALE / 50% FEMALE)

OCCUPANT LOAD	MALE	FEMALE
5 (B)	2.5	2.5

DOOR SCHEDULE

DOOR NO.	SIZE (WIDTH X HEIGHT)	TYPE	DOOR MTRL	DOOR FIN	DOOR THK	FRAME MTRL	FRAME FIN	DETAILS HEAD	DETAILS JAMB	DETAILS SILL	LOUVER W X H	THRESHOLD	FIRE RATING	HDWR	REMARKS
LEVEL 1															
101	3' - 0" x 7' - 0"	A	HM	P	0' - 1 3/4"	ST	P	5/A-9.0	4/A-9.0	3/A-9.0	1'-0" x 1'-0"	3/A-9.0	-	01	
102	3' - 0" x 7' - 0"	A	HM	P	0' - 1 3/4"	ST	P	5/A-9.0	4/A-9.0	3/A-9.0	1'-0" x 1'-0"	3/A-9.0	-	01	
103	3' - 0" x 7' - 0"	A	HM	P	0' - 1 3/4"	ST	P	5/A-9.0	4/A-9.0	3/A-9.0	1'-0" x 1'-0"	3/A-9.0	-	01	
104	3' - 0" x 7' - 0"	A	HM	P	0' - 1 3/4"	ST	P	5/A-9.0	4/A-9.0	3/A-9.0	1'-0" x 1'-0"	3/A-9.0	-	01	
105	7' - 2" x 7' - 4"	B	ST	P	0' - 3"	ST	P	-			-	-	-	-	SEE DETAIL 7/A-9.0 FOR GATE HARDWARE AND ACCESSORIES
106	3' - 0" x 7' - 0"	A	HM	P	0' - 1 3/4"	ST	P	5/A-9.0	4/A-9.0	3/A-9.0	1'-0" x 1'-0"	3/A-9.0	-	02	
107	3' - 0" x 7' - 0"	A	HM	P	0' - 1 3/4"	ST	P	5/A-9.0	4/A-9.0	3/A-9.0	1'-0" x 1'-0"	3/A-9.0	-	02	

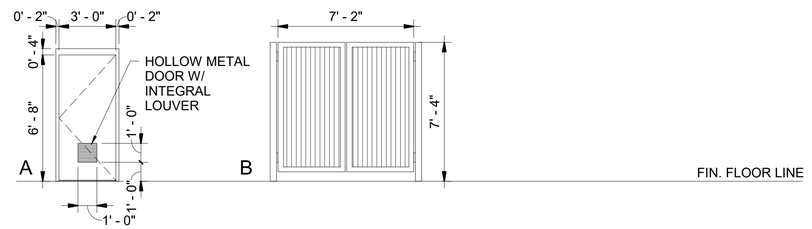

DOOR SCHEDULE LEGEND

HM:	HOLLOW METAL
ST:	STEEL
AL:	ANODIZED ALUMINUM
X:	DENOTES NEED FOR ITEM
P:	PAINT
PF:	PREFINISHED
KL:	MECHANICAL KEY
EL:	ELECTRIC CARD READER LOCK

ROOM FINISH SCHEDULE

ROOM NO.	ROOM NAME	ROOM SF	FLOOR	BASE	WALLS NORTH	WALLS WEST	WALLS SOUTH	WALLS EAST	CEILING	CEILING HT.	REMARKS
LEVEL 1											
101	UNISEX	61 SF	EPXY	CB	CWT	CWT	CWT	CWT	GB	8'-0" A.F.F.	
102	UNISEX	61 SF	EPXY	CB	CWT	CWT	CWT	CWT	GB	8'-0" A.F.F.	
103	UNISEX	61 SF	EPXY	CB	CWT	CWT	CWT	CWT	GB	8'-0" A.F.F.	
104	UNISEX	61 SF	EPXY	CB	CWT	CWT	CWT	CWT	GB	8'-0" A.F.F.	
105	TRASH AREA	31 SF	CONC	N/A	CMU	CMU	CMU	CMU	N/A	-	TRASH ENCLOSURE IS COVERED UNCONDITIONED SPACE; FINISHES ARE THE SAME AS THE BUILDING EXTERIOR FINISHES
106	UTILITY	20 SF	SC	RB	GB	GB	GB	GB	EXP.	-	
107	JANITOR	18 SF	SC	CB	GB	GB	GB	GB	EXP.	-	

NOTES

1. THE CONTRACTOR SHALL SUBMIT ALL FINISH COLOR SAMPLE FOR REVIEW AND APPROVAL BY THE ARCHITECT PRIOR TO INSTALLATION.
2. PAINT ALL EXPOSED STRUCTURAL BEAMS, DECKS, A/C DUCTS, PIPES, ELECTRICAL CONDUITS & COMPONENTS ETC. PAINT ALL EXPOSED STRUCTURAL COLUMNS & BRACES, AND PAINT ALL AIR DIFFUSERS & CEILING ACCESS DOORS TO MATCH WITH ADJACENT SURFACES, TYPICAL FOR ALL INTERIOR SPACES WITHIN THE BUILDING.
3. ALL INTERIOR FINISH MATERIALS APPLIED TO WALLS AND CEILINGS SHALL BE TESTED AS SPECIFIED IN SECTION 802 OF THE L.A. BUILDING CODE. FOR EXITWAYS, HALLWAYS AND CORRIDORS MUST HAVE MAXIMUM FLAME SPREAD OF CLASS-H, ALL OTHER ROOMS MUST HAVE MAXIMUM FLAME SPREAD OF CLASS-III.

ROOM FINISH LEGEND

CONC:	CLEAR CONCRETE SEALING AGENT	CB:	6" COVED CERAMIC BASE
RB:	RUBBER BASE	GB:	5/8" GYPSUM BOARD
EPXY:	WATERPROOF EPOXY COATING	WRGB:	5/8" WATER RESISTANT GYPSUM BOARD
CWT:	CERAMIC WALL TILE	PT:	PAINT, 1 PRIMER AND 2 COATS MIN.
SC:	SEALED CONCRETE	EXP:	EXPOSED TO STRUCTURE ABOVE

WALL LOUVER SCHEDULE

MARK	QUANTITY	WIDTH	HEIGHT	FINISH	HEAD	JAMB	SILL	COMMENTS
L1	2	2'-0"	1'-4"	PT	6/A-9.0	6/A-9.0	6/A-9.0	PAINT LOUVER AND FLASHING TO MATCH CMU

NO.	DATE	DRAWN	REVISIONS -	CHK'D	APP'D
A	3/20/25	-	30 % CONCEPT DESIGN		
B	4/25/25	-	FINAL CONCEPT DESIGN		
C	7/18/25	-	40 % DESIGN		
D	9/19/25	-	80% DESIGN		

NOT FOR CONSTRUCTION

80% DESIGN

Jacobs
2000 MICHELSON DRIVE, SUITE 500
IRVINE, CA 92612
T: (949) 224-7500
F: (949) 224-7501

LICENSED ARCHITECT ROBERT G. SMITH C-34239 02/28/ 2027 RENEWAL DATE STATE OF CALIFORNIA

SCALE:	AS SHOWN
DRAWN:	A. TERMYNA
CHECKED:	D. WINSTEAD
DESIGNED:	R. SMITH
	ENGINEER / ARCHITECT

TERMINAL ISLAND MARITIME SUPPORT FACILITY

SCHEDULES (DOOR, LOUVER AND FINISH)

THE PORT OF LOS ANGELES
ENGINEERING DIVISION
425 S. PALOS VERDES STREET SAN PEDRO CA 90731-3309

DRAWING NUMBER 1-3513

SHEET NUMBER A-8.0

RVT: Autodesk Docs://I.E.Cx_D337190_PDLA TIMSP/1-3513-IES-1-2A_WaterRoom_R25.rvt
DATE: 9/19/2025 2:14:23 PM

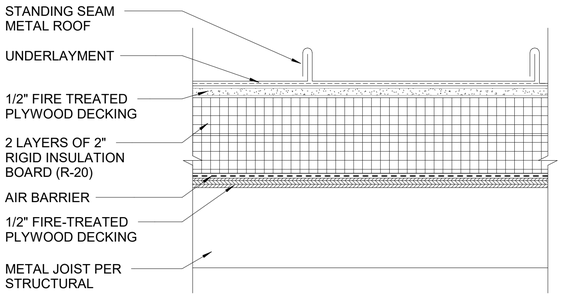

8A-9.0 / A-9.0 **STANDING SEAM ROOF ASSEMBLY**
SCALE: 3" = 1'-0"

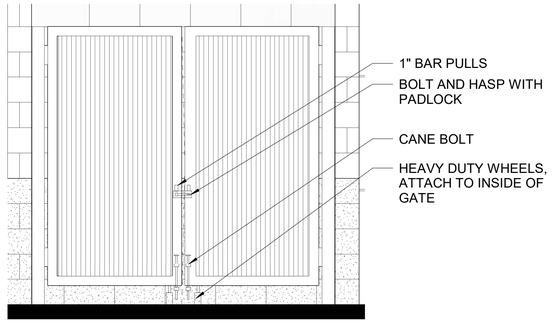

7A-9.0 / A-9.0 **TRASH ENCLOSURE GATE ACCESSORIES**
SCALE: 1/2" = 1'-0"

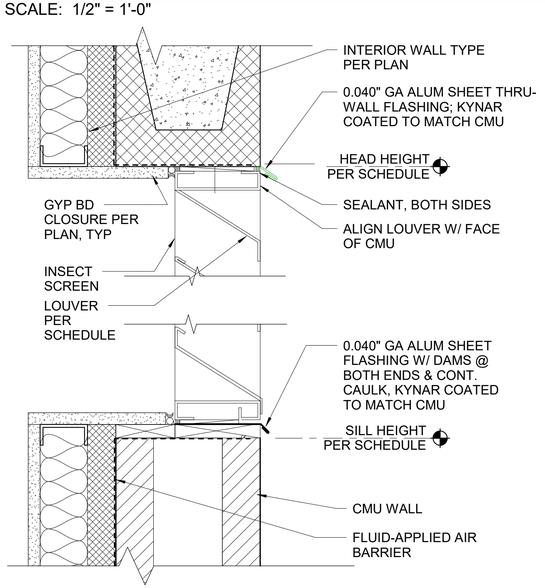

6A-9.0 / A-9.0 **LOUVER HEAD/SILL @ CMU (JAMB SIM.)**
SCALE: 3" = 1'-0"

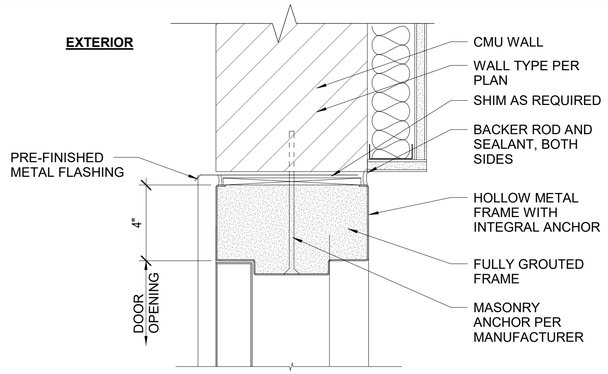

5A-9.0 / A-9.0 **EXTERIOR DOOR HEAD**
SCALE: 3" = 1'-0"

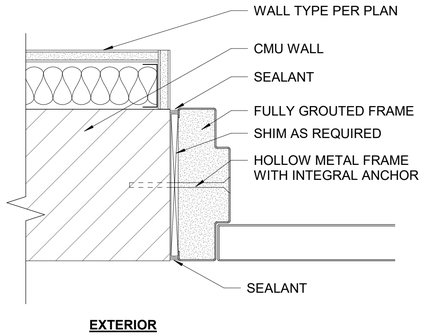

4A-9.0 / A-9.0 **EXTERIOR DOOR JAMB**
SCALE: 3" = 1'-0"

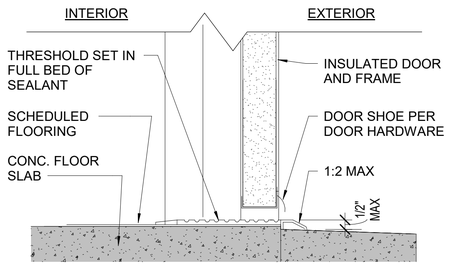

3A-9.0 / A-9.0 **EXTERIOR DOOR THRESHOLD**
SCALE: 3" = 1'-0"

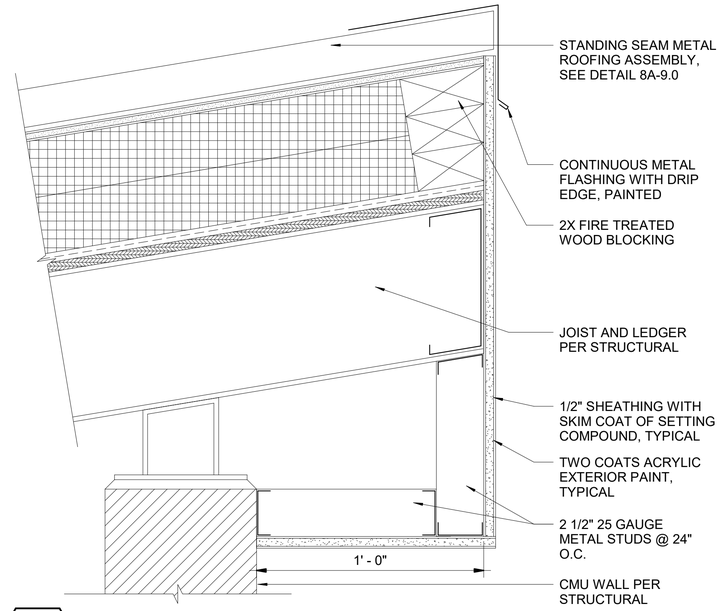

2A-9.0 / A-9.0 **HIGH EAVE DETAIL - RESTROOM BUILDING**
SCALE: 3" = 1'-0"

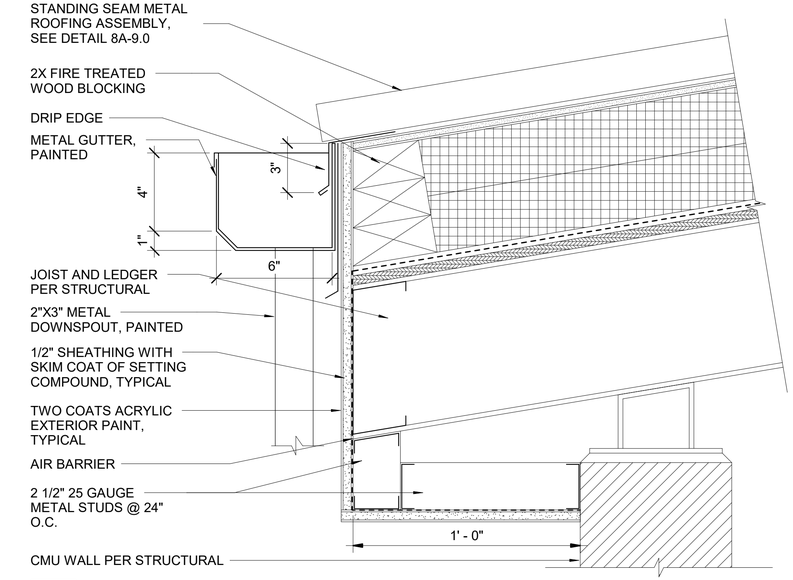

1A-9.0 / A-9.0 **GUTTER DETAIL - RESTROOM BUILDING**
SCALE: 3" = 1'-0"

NO.	DATE	DRAWN	REVISIONS -	CHK'D	APP'D
A	3/20/25	-	30 % CONCEPT DESIGN		
B	4/25/25	-	FINAL CONCEPT DESIGN		
C	7/18/25	-	40 % DESIGN		
D	9/19/25	-	80% DESIGN		

NOT FOR CONSTRUCTION

80% DESIGN

Jacobs
2600 MICHELSON DRIVE, SUITE 500
IRVINE, CA 92612
T: (949) 224-7500
F: (949) 224-7501

LICENSED ARCHITECT ROBERT G. SMITH C-34235 RENEWAL DATE STATE OF CALIFORNIA

SCALE: AS SHOWN
DRAWN: A. TERMYNA
CHECKED: D. WINSTEAD
DESIGNED: R. SMITH
ENGINEER / ARCHITECT

TERMINAL ISLAND MARITIME SUPPORT FACILITY

TYPICAL DETAILS - EXTERIOR - RESTROOM BUILDING

THE PORT OF LOS ANGELES
ENGINEERING DIVISION
425 S. PALOS VERDES STREET SAN PEDRO CA 90731-3309

DRAWING NUMBER 1-3513
SHEET NUMBER A-9.0

RVT: Autodesk Docs://I3-CA_D337180_PDLA TIMSFI_1-3513-IEG-13-A_WaitRoom_R23.rvt
DATE: 9/19/2025 2:14:27 PM

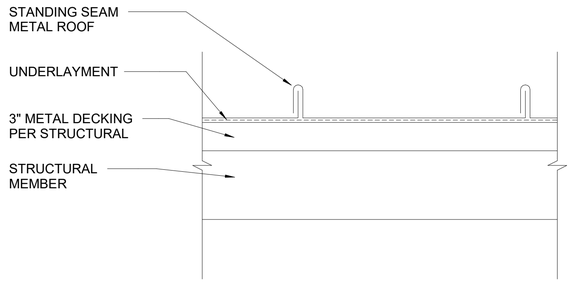

1A-9.1 / A-9.1 **STANDING SEAM ROOF ASSEMBLY**
SCALE: 3" = 1'-0"

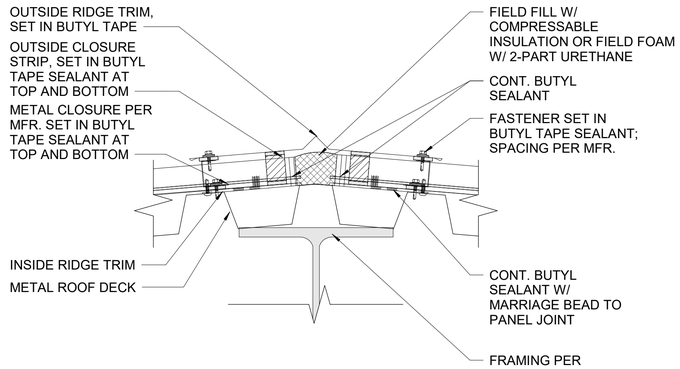

5A-9.1 / A-9.1 **SSMR RIDGE DETAIL**
SCALE: 3" = 1'-0"

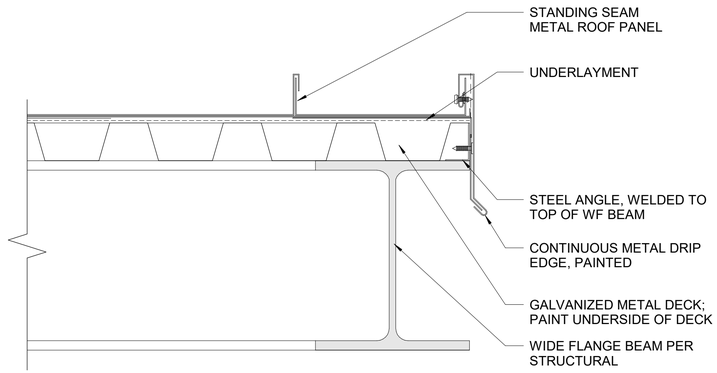

3A-9.1 / A-9.1 **ROOF EAVE @ SSMR**
SCALE: 3" = 1'-0"

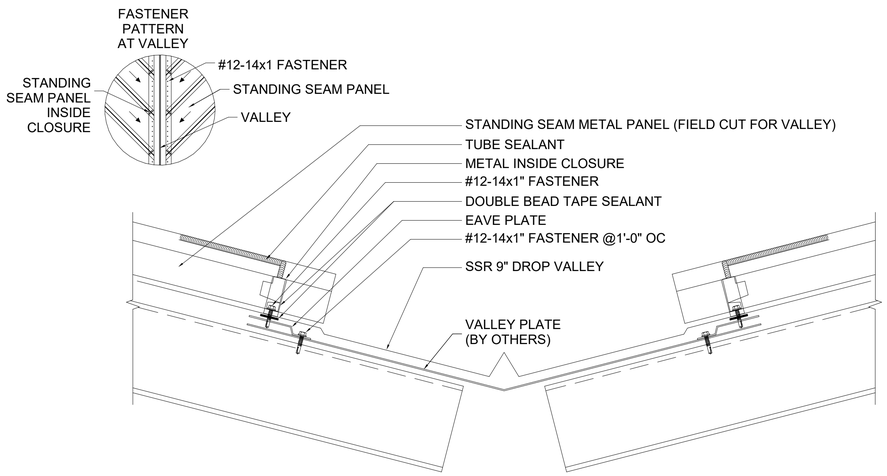

2A-9.1 / A-9.1 **SSMR VALLEY GUTTER**
SCALE: 3" = 1'-0"

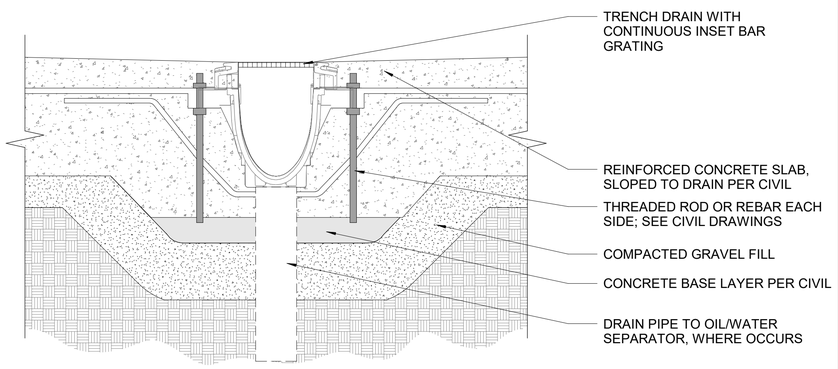

4A-9.1 / A-9.1 **TRENCH DRAIN SECTION**
SCALE: 3" = 1'-0"

NO.	DATE	DRAWN	REVISIONS -	CHK'D	APP'D
A	3/20/25	-	30 % CONCEPT DESIGN		
B	4/25/25	-	FINAL CONCEPT DESIGN		
C	7/18/25	-	40 % DESIGN		
D	9/19/25	-	80% DESIGN		

NOT FOR CONSTRUCTION

NO.	DATE	DRAWN	REVISIONS -	CHK'D	APP'D
			80% DESIGN		

Jacobs
2600 MICHELSON DRIVE, SUITE 500
IRVINE, CA 92612
T: (949) 224-7500
F: (949) 224-7501

LICENSED ARCHITECT — REGISTERED PROFESSIONAL — C-34239 — 02/28/ 2027 — RENEWAL DATE — STATE OF CALIFORNIA

SCALE:	AS SHOWN
DRAWN:	A. TERMYNA
CHECKED:	D. WINSTEAD
DESIGNED:	R. SMITH
	ENGINEER / ARCHITECT

TERMINAL ISLAND MARITIME SUPPORT FACILITY

TYPICAL DETAILS - EXTERIOR - ROADABILITY CANOPY

THE PORT OF LOS ANGELES
ENGINEERING DIVISION
425 S. PALOS VERDES STREET SAN PEDRO CA 90731-3309

DRAWING NUMBER	SHEET NUMBER
1-3513	A-9.1

RVT: Autodesk Docs://US CA_D3371901_POLA TIMSF1-3513-JEG-11-A_Roadability Canopy_R23.rvt
DATE: 9/19/2025 2:52:24 PM

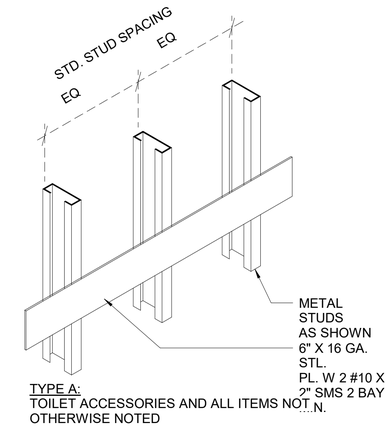

2A-9.2 / A-9.2 **TYP. BACKING AT STUDS**
SCALE: 3" = 1'-0"

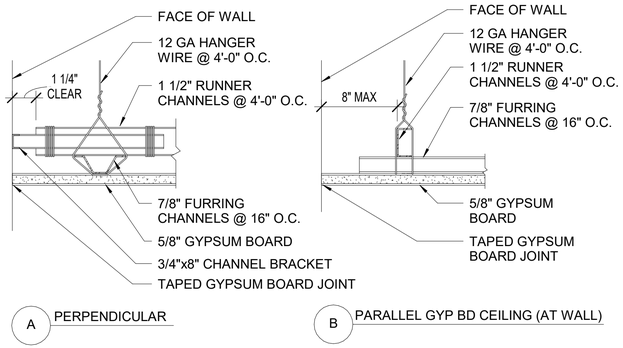

A PERPENDICULAR

B PARALLEL GYP BD CEILING (AT WALL)

3A-9.2 / A-9.2 **GYPSUM BOARD CEILING SUPPORT**
SCALE: 3" = 1'-0"

NOTE: BRACING LOCATIONS AS REQUIRED PER STRUCTURAL

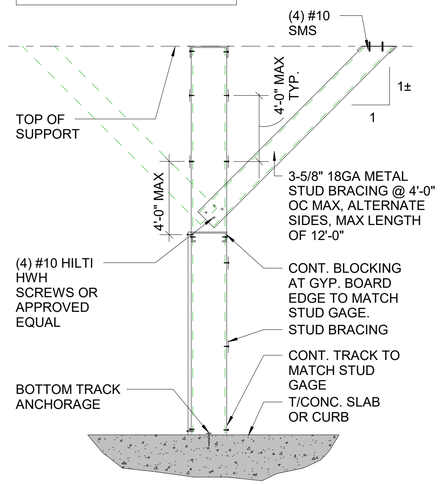

1A-9.2 / A-9.2 **TYP. WALL BRACING**
SCALE: 1" = 1'-0"

NO.	DATE	DRAWN	REVISIONS -	CHK'D	APP'D
A	3/20/25	-	30 % CONCEPT DESIGN		
B	4/25/25	-	FINAL CONCEPT DESIGN		
C	7/18/25	-	40 % DESIGN		
D	9/19/25	-	80% DESIGN		

NOT FOR CONSTRUCTION

NO.	DATE	DRAWN	REVISIONS -	CHK'D	APP'D

80% DESIGN

Jacobs
2600 MICHELSON DRIVE, SUITE 500
IRVINE, CA 92612
T: (949) 224-7500
F: (949) 224-7501

LICENSED ARCHITECT
ROBERT G. SMITH
C-23258
03/26/2027
REGISTRAR DATE
STATE OF CALIFORNIA

SCALE: AS SHOWN
DRAWN: A. TERMYNA
CHECKED: D. WINSTEAD
DESIGNED: R. SMITH
ENGINEER / ARCHITECT

TERMINAL ISLAND MARITIME SUPPORT FACILITY

TYPICAL DETAILS - INTERIOR - RESTROOM BUILDING

THE PORT OF LOS ANGELES
ENGINEERING DIVISION
425 S. PALOS VERDES STREET SAN PEDRO CA 90731-3309

DRAWING NUMBER 1-3513
SHEET NUMBER A-9.2

RVT: Autodesk Docs://US CA_D3371901_POLA TIMSF/1-3513-JEG-12-A_WashRoom_R25.rvt
DATE: 9/19/2025 2:14:27 PM

ABBREVIATIONS

ABBREVIATIONS

@	AT
ø	DIAMETER
#	NUMBER
AB	ANCHOR BOLT
ACI	AMERICAN CONCRETE INSTITUTE
AESS	ARCHITECTURALLY EXPOSED STRUCTURAL STEEL
ALT	ALTERNATE
APPROX	APPROXIMATE(LY)
ARCH	ARCHITECT(URAL)
BLDG	BUILDING
BLK	BLOCK
BLKG	BLOCKING
BM	BEAM
BN	BOUNDARY NAILING
BOF	BOTTOM OF FOOTING
BOT	BOTTOM
BVC	BEGIN VERTICAL CURVE
C-C	CENTER TO CENTER
CL	CENTERLINE
CF	CUBIC FOOT
CIDH	CAST IN DRILLED HOLE
CIP	CAST IRON PIPE
CJ	CONSTRUCTION JOINT
CJP	COMPLETE JOINT PENETRATION
CLG	CEILING
CLR	CLEAR. CLEARANCE
CMP	CORRUGATED STEEL PIPE
CMU	CONCRETE MASONRY UNIT
COL	COLUMN
CONC	CONCRETE
CONN	CONNECTION
CONST	CONSTRUCTION
CONT	CONTINUOUS
COORD	COORDINATE
CSK	COUNTERSINK
CY	CUBIC YARD
DBL	DOUBLE
DCW	DEMAND CRITICAL WELD
DET	DETAIL
DF	DOUGLAS FIR
DIAG	DIAGONAL
Ø	DIAMETER
DIST	DISTANCE
DL	DEAD LOAD
DN	DOWN
DO	DITTO
DWG	DRAWING
(E)	EXISTING
EA	EACH
EC	END HORIZONTAL CURVE
ECR	END CURB RETURN
EL	ELEVATION
ELEV	ELEVATOR
EMB	EMBANKMENT
EN	EDGE NAILING
EQ	EQUAL
EVC	END VERTICAL CURVE
EW	EACH WAY
EXIST	EXISTING
EXP	EXPRESSWAY
FBC	FRAMED BEAM CONNECTION
FG	FINISHED GRADE
FIN	FINISH(ED)
FL	FLOW LINE
FND	FOUNDATION
FN	FIELD NAILING
FOC	FACE OF CONCRETE
FOHC	FREE OF HEART CENTER
FOM	FACE OF MASONRY
FOS	FACE OF STUD(S)
FP	FULL PENETRATION
FS	FAR SIDE
FTG	FOOTING
Ga	GAUGE
GALV	GALVANIZED
GLB	GLUE LAMINATED BEAM
H or HT	HEIGHT
HDR	HEADER
HEX	HEXAGONAL
HGR	HANGER
HORIZ	HORIZONTAL
HS	HIGH STRENGTH
HSB	HIGH STRENGTH BOLT
HSS	HOLLOW STRUCTURAL SECTION
ID	INSIDE DIAMETER
INSP	INSPECTION/INSPECTOR
INSUL	INSULATION
JT	JOINT
KIPS	ONE THOUSAND POUNDS
LBS	POUNDS
LF	LINEAR FOOT
LGS	LIGHT GAUGE STEEL
LL	LIVE LOAD
LLBB	LONG LEGS BACK TO BACK
LLH	LONG LEG HORIZONTAL
LLV	LONG LEG VERTICAL
LOC	LOCATION

LOL	LAYOUT LINE
LONGIT	LONGITUDINAL
LS	LAG SCREW(S)
LT	LEFT
LW	LIGHT WEIGHT
MAX	MAXIMUM
MB	MACHINE BOLT(S)
MECH	MECHANICAL
MFR	MANUFACTURER
MIN	MINIMUM, MINUTES
MISC	MISCELLANEOUS
MOD	MODIFIED OR MODIFY
(N)	NEW
NIC	NOT IN CONTRACT
No.	NUMBER
Ø	NOMINAL DIAMETER
NOM	NOMINAL
NS	NEAR SIDE
NTS	NOT TO SCALE
O.C.	ON CENTER
OD	OUTSIDE DIAMETER
OG	ORIGINAL GROUND
OH	OPPOSITE HAND
OPP	OPPOSITE
OWSJ	OPEN WEB STEEL JOIST
PL	STEEL PLATE
PC	POINT OF CURVATURE
PCC	POINT OF COMPOUND CURVE OR PORTLAND CEMENT CONCRETE
PCP	PERFORATED CONCRETE PIPE
PCVC	POINT OF COMPOUND VERTICAL CURVE
PDF	POWDER DRIVEN FASTENER
PG	PROFILE GRADE
PI	POINT OF INTERSECTION
PJP	PARTIAL JOINT PENETRATION
P/L	PROPERTY LINE
PL	PLATE
PLY	PLYWOOD
POC	POINT ON HORIZONTAL CURVE
POT	POINT ON TANGENT
POVC	POINT ON VERTICAL CURVE
PRC	POINT OF REVERSE CURVE
PRVC	POINT OF REVERSE VERTICAL CURVE
PSF	POUNDS PER SQUARE FOOT
PSI	POUNDS PER SQUARE INCH
PT	POINT OR POST TENSION
PTDF	PRESSURE TREATED DOUGLAS FIR
PVC	POLYVINYL CHLORIDE
RAD or R	RADIUS
RCP	REINFORCED CONCRETE PIPE
REINF	REINFORCED, REINFORCING
REQ'D	REQUIRED
REV	REVISION
RS	ROUGH SAWN
RT	RIGHT
RW	RETAINING WALL
RWD	REDWOOD
R/W	RIGHT OF WAY
SAD	SEE ARCHITECTURAL DRAWINGS
SCHED	SCHEDULE
SEC	SECTION
SHT	SHEET
SHTG	SHEATHING
SIM	SIMILAR
SLRS	SEISMIC LOAD RESISTING SYSTEM
SM	SHEET STEEL
SMS	SHEET STEEL SCREW
SPEC(S)	SPECIFICATION(S)
SQ	SQUARE
SQFT	SQUARE FOOT
SQYD	SQUARE YARD
STAG	STAGGERED
STD	STANDARD
STL	STEEL
STRUCT	STRUCTURAL
STS	SELF TAPPING SCREW
SYM	SYMMETRICAL
T&G	TONGUE AND GROOVE
TBR	TO BE REMOVED
TEMP	TEMPORARY
TO	TOP OF
TOF	TOP OF FOOTING
TOP	TOP OF PLATE
TOS	TOP OF SLAB OR STEEL
TOW	TOP OF WALL
TRANS	TRANSVERSE
TYP	TYPICAL
U.N.O.	UNLESS NOTED OTHERWISE
VC	VERTICAL CURVE
VERT	VERTICAL
W/	WITH
WF	WIDE FLANGE
WP	WATERPROOF or WORKPOINT
WT	WEIGHT
WWF	WELDED WIRE FABRIC

GENERAL NOTES

1. CONSIDER GENERAL NOTES AS APPLYING TO ALL DRAWINGS.
2. DO NOT SCALE DRAWINGS. SCALE SHOWN FOR REFERENCE ONLY.
3. THE CONTRACTOR SHALL REFER TO THE PROJECT SPECIFICATIONS IN CONJUNCTION WITH THE STRUCTURAL DRAWINGS.
4. THE CONTRACTOR IS RESPONSIBLE FOR COORDINATION OF THE STRUCTURAL WORK WITH THE ARCHITECTURAL, CIVIL, AND MEP CONTRACT DOCUMENTS, AS WELL AS ANY OTHER APPLICABLE TRADES. OMISSIONS OR CONFLICTS BETWEEN VARIOUS ELEMENTS OF THE DRAWINGS, NOTES, AND DETAILS SHALL BE BROUGHT TO THE ATTENTION OF THE ARCHITECT AND RESOLVED PRIOR TO BIDDING AND PROCEEDING WITH THE WORK.
5. THE CONTRACTOR IS SOLELY RESPONSIBLE FOR THE DESIGN, INSTALLATION, AND REMOVAL OF TEMPORARY BRACING AND CONSTRUCTION SUPPORTS REQUIRED TO COMPLETE THE PROJECT. NO PORTION OF THE STRUCTURE SHALL BE CONSIDERED TO BE SELF SUPPORTING UNTIL THE ENTIRE VERTICAL AND LATERAL LOAD RESISTING SYSTEM IS IN PLACE.
6. THE CONTRACTOR SHALL PROTECT AND SHORE ALL EXCAVATIONS WITH BRACING AND SHORING AS REQUIRED TO MAINTAIN SOIL STABILITY.
7. CONSTRUCT THOSE FEATURES OF THE PROJECT, WHICH MAY NOT BE FULLY SHOWN, IN MANNER SIMILAR TO THAT USED FOR SIMILAR FEATURES.
8. CENTERLINES OF COLUMNS AND FOUNDATIONS COINCIDE WITH GRID LINE INTERSECTIONS, U.N.O.
9. CENTERLINES OF FOUNDATION GRADE BEAMS COINCIDE WITH CENTERLINES OF WALLS, U.N.O.
10. CENTERLINES OF FRAMING MEMBERS COINCIDE WITH COLUMN CENTERLINES, U.N.O.
11. THE CONTRACTOR SHALL SUBMIT SHOP DRAWINGS SHOWING PROPOSED FOUNDATION CONSTRUCTION JOINT LOCATIONS, DETAILS, AND THE PLACEMENT SEQUENCE FOR THE STRUCTURAL ENGINEER'S APPROVAL PRIOR TO PROCEEDING WITH WORK.
12. NO CONSTRUCTION JOINTS WILL BE PERMITTED IN BEAMS, WALLS, AND SLABS UNLESS SPECIFICALLY SHOWN ON THE DRAWINGS OR APPROVED BY THE ENGINEER PRIOR TO CONSTRUCTION.
13. SPLICES SHALL BE ALLOWED ONLY AT LOCATIONS SPECIFICALLY INDICATED ON THE STRUCTURAL DRAWINGS UNLESS APPROVED OTHERWISE BY THE ENGINEER.
14. SEE ARCHITECTURAL DRAWINGS FOR SIZE AND LOCATION OF OPENINGS. VERIFY SIZE AND LOCATION OF ALL OPENINGS WITH ARCHITECTURAL DRAWINGS AND MECHANICAL DRAWINGS. NOTIFY STRUCTURAL ENGINEER IMMEDIATELY OF ANY DISCREPANCIES TYPICAL, U.N.O.

STRUCTURAL OBSERVATIONS

REQUIRED OBSERVATION BY THE STRUCTURAL ENGINEER OF RECORD
1. FOUNDATION REINFORCING.
2. CMU CONSTRUCTION PRIOR TO GROUTING.
3. STEEL ERECTION.
4. STEEL DECK PLACEMENT

CONTRACTOR SHALL NOTIFY ENGINEER A MINIMUM OF 2 WORKING DAYS PRIOR TO THE TIME WHEN HIS PRESENCE IS REQUIRED. PLEASE NOTE THAT THESE OBSERVATIONS ARE INDEPENDENT OF INSPECTIONS REQUIRED BY THE BUILDING DEPARTMENT.

STRUCTURAL DELEGATED DESIGN

1. THE FOLLOWING ITEMS SHALL BE SUBMITTED FOR DEFERRED APPROVAL BY THE ENFORCEMENT AGENCY PRIOR TO FABRICATION OR INSTALLATION.
2. SEE THE SPECIFICATIONS AND STRUCTURAL DESIGN CRITERIA FOR REQUIRED PERFORMANCE AND LOADING CRITERIA.
3. DEFERRED SUBMITTALS ARE SUBJECT TO ALL THE REQUIREMENTS OF OTHER SUBMITTALS.
4. SUBMITTAL DOCUMENTS AND SUPPORTING DESIGN CALCULATIONS SHALL BE STAMPED AND SIGNED BY A CALIFORNIA REGISTERED PROFESSIONAL ENGINEER.
5. DOCUMENTS AND CALCULATIONS FOR DEFERRED SUBMITTAL ITEMS SHALL BE SUBMITTED TO THE ENGINEER FOR REVIEW FOR GENERAL CONFORMANCE WITH THE DESIGN OF THE PROJECT PRIOR TO SUBMITTAL TO THE ENFORCEMENT AGENCY.
6. DEFERRED SUBMITTAL ITEMS SHALL NOT BE FABRICATED OR INSTALLED UNTIL THEIR DESIGN AND SUBMITTAL DOCUMENTS HAVE BEEN APPROVED BY THE ENFORCEMENT AGENCY.

LIST OF DEFERRED SUBMITTALS:
1. PRECAST PRESTRESSED CONCRETE PILES, SEE S7.3 & SPECIFICATIONS
2. EQUIPMENT ANCHORAGE.

PROJECT DATA

1. PLANS AND CALCULATIONS FOR THE STRUCTURAL DESIGN WERE BASED UPON:
   - GOVERNING CODE: 2022 CALIFORNIA BUILDING CODE
   - SOILS REPORT: "GEOTECHNICAL ENGINEERING AND GEOLOGIC/SEISMIC HAZARD INVESTIGATION" PROJECT NUMBER: [REFERENCE NUMBER] BY [COMPANY], INC. DATED [MONTH, DAY, YEAR]
2. VERTICAL LOADS:
   CANOPY ROOF DEAD LOAD = 14 PSF + SOLAR LOAD BELOW
   CANOPY ROOF LIVE LOAD = 20 PSF [REDUCED PER CODE]
   RESTROOM ROOF DEAD LOAD = 18 PSF + SOLAR LOAD BELOW
   RESTROOM ROOF LIVE LOAD = 20 PSF [REDUCED PER CODE]
3. EARTHQUAKE DESIGN DATA:
   EQUIVALENT LATERAL FORCE PROCEDURE
   $V = \frac{S_{DS} I}{R} W$
   $S_S = 1.723$; $S_1 = 0.637$
   $S_{DS} = 1.379$; $S_{D1} = 0.722$
   I = 1.00; RISK CATEGORY II
   SITE CLASS = D; SEISMIC DESIGN CAT = D
   SEISMIC RESISTING SYSTEM: STEEL ORDINARY CANTILEVERED COLUMN SYSTEM(CANOPY)
   $R = 1.25$; $\Omega_o = 1.25$; $C_d = 2.5$
   V = 0.916 W [LRFD]
   SEISMIC RESISTING SYSTEM: SPECIAL REINFORCED MASONRY SHEARWALLS(RESTROOM)
   $R = 5.0$; $\Omega_o = 2.5$; $C_d = 3.5$
   V = 0.229 W [LRFD]
4. WIND DESIGN DATA:
   BASIC WIND SPEED = 94 MPH
   RISK CATEGORY II
   WIND EXPOSURE = D
   INTERNAL PRESSURE COEFFICIENT = +0.18, -0.18

   CANOPY DESIGN WIND PRESSURE = +19.3, -17.7 PSF
   CANOPY ROOF COMPONENTS AND CLADDING PRESSURE = +19.3, -17.7 (ZONE 1, 2 & 3)PSF

   RESTROOM DESIGN WIND PRESSURE = 18.9 PSF
   RESTROOM WALL COMPONENTS AND CLADDING PRESSURE = +22.3, -24.2 (ZONE 4) -29.8 (ZONE 5) PSF
   RESTROOM ROOF COMPONENTS AND CLADDING PRESSURE = +9.1, -24.2 (ZONE 1) -27.9 (ZONE 2) -33.6 (ZONE 2') -37.4 (ZONE 3) PSF

   NOTE: COMPONENTS & CLADDING PRESSURES ABOVE ARE WORST CASE PRESSURES BASED ON 10 SF TRIBUTARY AREA AND MAY BE REDUCED PER ASCE 7. POSITIVE AND NEGATIVE PRESSURES SIGNIFY WIND ACTING TOWARD AND AWAY FROM SURFACES, RESPECTIVELY.
5. FOUNDATION DESIGN CRITERIA:
   CANOPY & RESTROOM
   16-INCH SQUARE PRESTRESSED CONCRETE PILES:
   DL + LL: XX K (COMPRESSION), XX K (TENSION)
   TOTAL LOAD (UNDER SEISMIC CONDITION): XX K (COMPRESSION), XX K (TENSION)
6. SOLAR PANEL ALLOWANCE:
   THE DESIGN HAS ACCOUNTED FOR FUTURE SOLAR PANELS TO BE LOCATED ON THE ROOFS. HOWEVER A DESIGN OF THE SOLAR PANEL SUPPORT STRUCTURE IS NOT INCLUDED IN THIS CONTRACT.

   MAXIMUM SOLAR PANEL ALLOWANCE = 5 PSF

PROJECT DESCRIPTION

CANOPY

LEVELS:	SINGLE STORY
FOUNDATION:	ISOLATED COLUMN FOUNDATIONS W/ PRECAST PILES
ROOF SYSTEM:	STEEL DECK OVER STEEL BEAMS AND GIRDERS
LATERAL FORCE RESISTING SYSTEM:	STEEL SPECIAL CANTILEVERED COLUMN SYSTEM
DIAPHRAGMS:	STEEL DECK DIAPHRAGMS
CHORDS & COLLECTORS:	STEEL BEAMS

RESTROOM

LEVELS:	SINGLE STORY
FOUNDATION:	SLAB ON GRADE AND GRADE BEAM FOUNDATIONS W/ PRECAST PILES
ROOF SYSTEM:	PLYWOOD SHEATHING OVER LIGHT GAUGE STEEL BEAMS
LATERAL FORCE RESISTING SYSTEM:	SPECIAL REINFORCED MASONRY SHEARWALLS
DIAPHRAGMS:	PLYWOOD DIAPHRAGMS
CHORDS & COLLECTORS:	LIGHT GAUGE STEEL BEAMS

SUBMITTALS

SUBMITTALS FOR THE ENGINEERS REVIEW WILL BE REQUIRED AS FOLLOWS:
1. PILE DRIVING METHOD, PROCEDURE, CONCRETE PILE SHOP DRAWINGS AND EQUIPMENT
2. REINFORCING STEEL SHOP DRAWINGS
3. MIX DESIGNS
4. STRUCTURAL MASONRY (CMU) CERTIFICATES OF COMPLIANCE AND GROUT MIX DESIGN
5. STRUCTURAL STEEL AND MISCELLANEOUS METALS SHOP DRAWINGS
6. WELDING PROCEDURE SPECIFICATIONS (AND PQR IF APPLICABLE)
7. STEEL DECK SHOP DRAWINGS

NOTES:
1. CONTRACTOR SHALL ELECTRONICALLY SUBMIT SUBMITTALS FOR REVIEW OR SHALL SUBMIT A MINIMUM OF TWO SETS OF HARD PRINTS FOR REVIEW.
2. THE GENERAL CONTRACTOR SHALL REVIEW EACH SUBMITTAL PRIOR TO FORWARDING TO ARCHITECT AND STRUCTURAL ENGINEER. THE GENERAL CONTRACTOR SHALL VERIFY THAT THE SHOP DRAWING IS COORDINATED AMONG ALL CONSTRUCTION TRADES AND THAT THE ARCHITECT'S AND STRUCTURAL ENGINEER'S COMMENTS FROM ANY PREVIOUS SUBMITTALS ARE ADDRESSED.
3. CONTRACTOR SHALL SUBMIT IN WRITING, ANY REQUEST FOR MODIFICATIONS TO THE PLANS AND SPECIFICATIONS. SHOP DRAWINGS SUBMITTED FOR REVIEW DO NOT CONSTITUTE "IN WRITING" UNLESS IT IS CLEARLY NOTED THAT SPECIFIC CHANGES ARE BEING REQUESTED.
4. REVISIONS FROM PREVIOUS SUBMITTALS SHALL BE CLEARLY MARKED BY CLOUDS.
5. FABRICATION SHALL NOT PROCEED UNTIL SUBMITTALS HAVE BEEN REVIEWED BY THE ENGINEER.

CONTRACTOR'S STATEMENT OF RESPONSIBILTY
EACH CONTRACTOR RESPONSIBLE FOR THE CONSTRUCTION OF A SEISMIC OR WIND-FORCE RESISTING SYSTEM OR COMPONENT SHALL ISSUE A WRITTEN STATEMENT OF RESPONSIBILITY IN COMPLIANCE WITH SECTION 1704.4 OF THE CURRENT GOVERNING EDITION OF THE CALIFORNIA BUILDING CODE. THE CONTRACTORS STATEMENT OF RESPONSIBILITY SHALL CONTAIN ACKNOWLEDGEMENT OF AWARENESS OF THE SPECIAL REQUIREMENTS CONTAINED IN THE STATEMENT OF SPECIAL INSPECTION.

SHEET INDEX

S-0.1	PROJECT INFORMATION
S-0.2	MATERIAL SPECIFICATIONS
S-0.3	TESTING & SPECIAL INSPECTIONS
S-0.4	TYPICAL DETAILS NO. 1
S-0.5	TYPICAL DETAILS NO. 2
S-0.6	TYPICAL DETAILS NO. 3
S-0.7	TYPICAL DETAILS NO. 4
S-0.8	TYPICAL DETAILS NO. 5
S-0.9	TYPICAL DETAILS NO. 6
S-1.1	CANOPY FOUNDATION PLAN
S-1.2	CANOPY ROOF FRAMING PLAN
S-1.3	RESTROOM FOUNDATION & ROOF FRAMING PLAN
S-3.1	CANOPY SECTION
S-7.1	CANOPY DETAILS
S-7.2	RESTROOM DETAILS
S-7.3	PRECAST PILE DETAILS
S-7.4	ELECTRICAL EQUIPMENT FOUNDATIONS
S-7.5	100' LIGHT POLE FOUNDATION

NO.	DATE	DRAWN	REVISIONS -	CHK'D	APP'D
A	3/20/25	-	30 % CONCEPT DESIGN		
B	4/25/25	-	FINAL CONCEPT DESIGN		
C	7/18/25	-	40 % DESIGN		
D	9/19/25	-	80 % DESIGN		

NOT FOR CONSTRUCTION

NO.	DATE	DRAWN	REVISIONS -	CHK'D	APP'D

80% DESIGN REVIEW
SEP 19, 2025

Jacobs
2600 MICHELSON DRIVE, SUITE 500
IRVINE, CA 92612
T: (949) 224-7500
F: (949) 224-7501

CORNERSTONE structural engineering group
986 W. Alluvial, Suite 201
Fresno, California 93711
559.320.3200

REGISTERED PROFESSIONAL ENGINEER
DUSTIN G. LEE
No. S6623
EXP. 3/31/27
STRUCTURAL
STATE OF CALIFORNIA

SCALE: AS SHOWN
DRAWN: M.REISZ
CHECKED: D.LEE
DESIGNED: D.ANDERSON
ENGINEER / ARCHITECT

TERMINAL ISLAND MARITIME SUPPORT FACILITY

PROJECT INFORMATION

THE PORT OF LOS ANGELES
ENGINEERING DIVISION
425 S. PALOS VERDES STREET SAN PEDRO CA 90731-3309

DRAWING NUMBER 1-3513
SHEET NUMBER S-0.1

RVT: \\cseg-fr-fs01\sfhome$\SFHome\dlee\1-3513-JEG-11-S_Roadability Canopy_R25_dlee@cseg.com.rvt
DATE: 9/19/2025 4:10:36 PM

MATERIAL DATA

GENERAL

ALL WORK SHALL CONFORM TO THE REQUIREMENTS OF THE GOVERNING CODE. SEE 'PROJECT DATA'

CONSTRUCTION LIABILITY
THE CONSTRUCTION CONTRACTOR AND HIS SUBCONTRACTORS AGREE THAT IN ACCORDANCE WITH GENERALLY ACCEPTED CONSTRUCTION PRACTICES, THE CONSTRUCTION CONTRACTOR AND HIS SUBCONTRACTORS WILL BE REQUIRED TO ASSUME SOLE AND COMPLETE RESPONSIBILITY FOR JOB SITE CONDITIONS DURING THE COURSE OF CONSTRUCTION OF THE PROJECT, INCLUDING SAFETY OF ALL PERSONS AND PROPERTY; THAT THIS REQUIREMENT SHALL BE MADE TO APPLY CONTINUOUSLY AND NOT LIMITED TO NORMAL WORKING HOURS, AND THE CONSTRUCTION CONTRACTOR AND HIS SUBCONTRACTORS FURTHER AGREE TO DEFEND, INDEMNIFY AND HOLD THE DESIGN PROFESSIONAL HARMLESS FROM ANY LIABILITY, REAL OR ALLEGED, IN CONNECTION WITH THE PERFORMANCE OF WORK ON THIS PROJECT, EXCEPT LIABILITY ARISING FROM THE SOLE NEGLIGENCE OF THE DESIGN PROFESSIONAL.

CONCRETE & REINFORCING

REINFORCING STEEL
BARS FOR REINFORCING SHALL BE GRADE 60 DEFORMED BARS CONFORMING TO ASTM A706 OR A615. LAP SPLICES SHALL BE IN ACCORDANCE WITH ACI 318, CURRENT EDITION UNLESS NOTED OTHERWISE ON THE PLANS. BARS TO BE WELDED OR FIELD BENT SHALL CONFORM TO ASTM A706.

CONCRETE
CONCRETE SHALL BE CONSTRUCTED IN ACCORDANCE WITH THE **2019** EDITION OF ACI 301 & 318. CONCRETE SHALL BE READY-MIXED CONCRETE IN ACCORDANCE WITH ASTM C94.

MAXIMUM WATER-CEMENT RATIO, BY WEIGHT

28 DAY COMPRESSIVE STRENGTH	WATER-CEMENT RATIO
4000 PSI CONCRETE	0.45

AVERAGE DRYING SHRINKAGE FOR CONCRETE AFTER 21 DAYS OF DRYING SHALL NOT EXCEED 0.040% IN SUSPENDED SLABS AND 0.048% IN SLABS ON GRADE.

AT THE CONTRACTOR'S OPTION, AN AIR ENTRAINING AGENT CONFORMING TO THE LATEST REVISION OF ASTM SPECIFICATION C260 MAY BE ADDED TO THE CONCRETE TO PROVIDE UP TO A MAXIMUM OF 3% ± 1.5% ENTRAINED AIR. CEMENT SHALL BE IN ACCORDANCE WITH THE STANDARD SPECIFICATIONS FOR PORTLAND CEMENT PER ASTM DESIGNATION C150, TYPE II. NO MORE THAN 15% BY WEIGHT OF CEMENT MAY BE REPLACED BY FLY ASH CONFORMING TO ASTM C618, CLASS N OR F.

CONCRETE ELEMENT	MIN 28 DAY COMPRESSIVE STRENGTH	MAX SIZE AGGREGATE (INCHES)	SLUMP (INCHES)
FOOTINGS	4000	1-1/2	3
SLABS ON GRADE	4000	1	4

SLUMP WILL BE MEASURED AT THE TRUCK DISCHARGE. SLUMPS NOTED ABOVE ARE FOR CONCRETE WITHOUT ADMIXTURES TO BE CONSOLIDATED USING VIBRATION. FORMWORK CONSTRAINTS, CONGESTION OF REBAR, AND PUMPING OF CONCRETE MAY REQUIRE INCREASED SLUMP BEYOND THE SLUMP LISTED ABOVE. THE CONTRACTOR SHALL ADJUST THE SLUMP UP TO 8" MAX USING ADMIXTURES AS NECESSARY TO PROVIDE WORKABILITY AND CONSISTENCY TO PERMIT CONCRETE TO BE WORKED READILY INTO FORMS AND AROUND REINFORCEMENT UNDER CONDITIONS OF PLACEMENT TO BE EMPLOYED WITHOUT SEGREGATION OR EXCESSIVE BLEEDING. ALL ADMIXTURES SHALL BE NOTED IN THE SUBMITTED MIX DESIGN AND ARE SUBJECT TO THE ENGINEER'S REVIEW. THE SPECIAL INSPECTOR SHALL BE PROVIDED WITH A BATCH TICKET AND WEIGHT TAG UPON DELIVERY OF EACH LOAD OF CONCRETE.

ALL CONCRETE SHALL BE PLACED WITH MECHANICAL VIBRATION UNLESS NOTED OTHERWISE.

EXPOSURE CATEGORIES AND CLASSES FOR ALL CONCRETE TYPES ARE AS FOLLOW:

A. FREEZING AND THAWING:	CLASS: F0
B. SULFATE EXPOSURE:	CLASS: S0
C. IN CONTACT WITH WATER:	CLASS: W0
D. CORROSION PROTECTION OF REINFORCEMENT:	CLASS: C1

UNDER SLAB MATERIALS
SLAB MEMBRANE SHALL BE 15 MIL POLYETHYLENE FILM, UNLESS NOTED OTHERWISE. LAP SLAB MEMBRANE PER THE MANUFACTURER'S RECOMMENDATIONS, BUT NO LESS THAN 12 INCHES.

GRAVEL SHALL BE 3/4" CLEAN MATERIAL MEETING THE REQUIREMENTS OF ACI 302.1R.

NON-SHRINK GROUT
NON SHRINK GROUT SHALL BE FLOWABLE, WITH A MINIMUM 7 DAY COMPRESSIVE STRENGTH OF 5000 PSI. NON-SHRINK GROUT SHALL BE MASTERFLOW 928 GROUT AS MANUFACTURED BY BASF OR APPROVED EQUAL.

DEEP FOUNDATIONS

PRECAST PRESTRESSED CONCRETE PILES
PRECAST PRESTRESSED CONCRETE PILES SHALL BE AS SHOWN ON THE PLANS AND FABRICATED IN ACCORDANCE WITH THE REQUIREMENTS OF SPECIFICATIONS SECTION 31 62 13.23.

MASONRY

STRUCTURAL MASONRY (CMU)
STRUCTURAL MASONRY (CMU) SHALL BE CONSTRUCTED IN ACCORDANCE WITH THE CURRENT EDITION OF ACI 530 & 530.1. COMPLIANCE WITH SPECIFIED DESIGN STRENGTH METHOD SHALL BE BY THE UNIT STRENGTH METHOD. AT THE CONTRACTOR'S OPTION, THE PRISM TEST METHOD MAY BE USED TO CONFIRM COMPLIANCE WITH SPECIFIED DESIGN STRENGTH.

MASONRY UNITS SHALL BE OPEN ENDED MEDIUM WEIGHT UNITS CONFORMING TO ASTM DESIGNATION C90. ALL CELLS SHALL BE GROUTED SOLID. F'm = 2,000 PSI. WALL REINFORCEMENT SHALL BE RESTRAINED BY MECHANICAL POSITIONERS AT 48" OC, MAX.

MORTAR SHALL CONFORM TO ASTM C270 TYPE S. MINIMUM COMPRESSIVE STRENGTH AT 28 DAYS: 1,800 PSI. MASONRY CEMENT MAY NOT BE USED IN MORTAR.

GROUT SHALL BE COARSE GROUT CONFORMING TO ASTM C476. THE GROUT SHALL DEVELOP A MINIMUM COMPRESSIVE STRENGTH OF 2,500 PSI AT 28 DAYS. SLUMP SHALL BE 8" TO 10".

POST INSTALLED ANCHORS

MECHANICAL ANCHORING SYSTEMS FOR CONCRETE
MECHANICAL ANCHORING SYSTEMS SHALL BE
- SIMPSON TITEN HD (ICC ESR-2713)
- APPROVED EQUAL

INSTALLATION OF ANCHORS INCLUDING DRILLING AND CLEANING OF HOLES SHALL BE IN ACCORDANCE WITH THE CURRENT ICC OR IAPMO REPORT

MECHANICAL ANCHORING SYSTEMS FOR GROUTED CONCRETE BLOCK
MECHANICAL ANCHORING SYSTEMS SHALL BE
- SIMPSON TITEN HD (ICC ESR-1056)
- APPROVED EQUAL

INSTALLATION OF ANCHORS INCLUDING DRILLING AND CLEANING OF HOLES SHALL BE IN ACCORDANCE WITH THE CURRENT ICC OR IAPMO REPORT

ADHESIVE ANCHORING SYSTEMS FOR CONCRETE
ADHESIVE ANCHORING SYSTEMS SHALL BE:
- HILTI HIT-RE 500 V3 (ICC ESR-3814) (ICC ESR 3187)
- SIMPSON SET-XP (ICC ESR-2508) OR AT-XP (IAPMO UES ER-263)
- DEWALT\POWERS PURE 110+ (ICC ESR-3298) OR AC100+ GOLD (ICC ESR-2582)
- APPROVED EQUAL.

INSTALLATION OF ANCHORS AND ADHESIVE INCLUDING DRILLING AND CLEANING OF HOLES SHALL BE IN ACCORDANCE WITH THE CURRENT ICC OR IAPMO REPORT. ADHESIVES SHALL BE USED ONLY IN APPLICATIONS PERMITTED BY THE ADHESIVE'S ICC OR IAPMO REPORT. ADHESIVE ANCHORS SHALL BE INSTALLED IN CONCRETE HAVING A MINIMUM AGE OF 21 DAYS AT TIME OF ANCHOR INSTALLATION.

ADHESIVE ANCHORING SYSTEMS FOR GROUTED CONCRETE BLOCK
ADHESIVE ANCHORING SYSTEMS SHALL BE:
- HILTI HIT HY270 (ICC ESR-4143)
- SIMPSON SET-XP (IAPMO UES ER-265) OR AT-XP (IAPMO UES ER-281)
- DEWALT\POWERS AC100+ GOLD (ICC-ES ESR-3200)
- APPROVED EQUAL

INSTALLATION OF ANCHORS AND ADHESIVE INCLUDING DRILLING AND CLEANING OF HOLES SHALL BE IN ACCORDANCE WITH THE CURRENT ICC OR IAPMO REPORT. ADHESIVES SHALL BE USED ONLY IN APPLICATIONS PERMITTED BY THE ADHESIVE'S ICC OR IAPMO REPORT.

EXPANSION ANCHORS FOR CONCRETE
EXPANSION ANCHORS SHALL BE:
- HILTI KWIK BOLT TZ2 ANCHORS (ICC ESR-4266),
- SIMPSON STRONG BOLT 2 WEDGE ANCHOR (ICC ESR-3037)
- DEWALT\POWERS POWER-STUD+ SD2 (ICC ESR-2502)
- APPROVED EQUAL.

CONTRACTOR SHALL TORQUE ANCHORS IN ACCORDANCE WITH THE ICC OR IAPMO REPORT. EXPANSION ANCHORS SHALL USE WASHERS SIZED TO PREVENT CRUSHING OF THE ATTACHED MEMBER UNDER THE INSTALLATION TORQUE.

EXPANSION ANCHORS FOR GROUTED CONCRETE BLOCK
EXPANSION ANCHORS SHALL BE:
- HILTI KWIK BOLT TZ2 ANCHORS (ICC ESR-4561)
- SIMPSON STRONG BOLT 2 EXPANSION ANCHOR (IAPMO ER-240)
- DEWALT\POWERS POWER-STUD+ SD1 (ICC ESR-2966)
- APPROVED EQUAL.

CONTRACTOR SHALL TORQUE ANCHORS IN ACCORDANCE WITH THE ICC OR IAPMO REPORT. EXPANSION ANCHORS SHALL USE WASHERS SIZED TO PREVENT CRUSHING OF THE ATTACHED MEMBER UNDER THE INSTALLATION TORQUE.

WOOD FRAMING

PLYWOOD
ALL PLYWOOD SHALL CONFORM TO U.S. PRODUCT STANDARD PS 1-19, AMERICAN PLYWOOD ASSOCIATION. EACH SHEET SHALL BE STAMPED WITH THE PS AND/OR APA GRADEMARK.

ALL PLYWOOD PERMANENTLY EXPOSED TO WEATHER SHALL BE EXTERIOR TYPE PLYWOOD.

ALL UNBLOCKED PLYWOOD EDGES SHALL BE TONGUE-AND-GROOVE OR SUPPORTED WITH PLYWOOD CLEATS OR PLYWOOD CLIPS.

ROOF PLYWOOD:
- 5 PLY EXPOSURE 1, CDX, SPAN RATING 32/16, SPECIES GROUP 2 OR BETTER.
- 5 PLY EXPOSURE 1, STRUCTURAL 1, SPAN RATING 32/16, SPECIES GROUP 1.

LIGHT GAGE METAL CONNECTORS
ALL LIGHT GAGE METAL CONNECTORS SHALL BE SIMPSON STRONG TIE CONNECTORS OR APPROVED EQUAL, UNLESS NOTED OTHERWISE ON THE DRAWINGS. CONNECTORS IN CONTACT WITH PRESSURE TREATED LUMBER TO BE HOT DIPPED ZINC-COATED GALVANIZED STEEL IN COMPLIANCE WITH ASTM A653 OR ASTM A123. ALL CONNECTORS SHALL BE INSTALLED PER MNFR SPECIFICATIONS TO MAX CAPACITY.

STRUCTURAL STEEL

STRUCTURAL STEEL AND MISCELLANEOUS IRON
STRUCTURAL STEEL AND MISCELLANEOUS IRON SHALL BE CONSTRUCTED IN ACCORDANCE WITH THE CURRENT EDITION OF THE AISC CODE OF STANDARD PRACTICE. FABRICATION SHALL BE BY A CURRENTLY LICENSED LADBS APPROVED FABRICATOR.

1. WIDE FLANGE AND STRUCTURAL TEE SHAPES SHALL CONFORM TO ASTM A992.
2. CHANNELS AND ANGLES SHALL CONFORM TO ASTM A36.
3. HOLLOW STRUCTURAL SECTIONS SHALL CONFORM TO ASTM A500, GRADE C.
4. STRUCTURAL PLATE SHALL CONFORM TO ASTM A36 OR ASTM A572 GR50.

ALL STRUCTURAL STEEL AND MISCELLANEOUS IRON SHALL RECEIVE SHOP PRIME COAT EXCEPT ON SURFACES RECEIVING WELDS, EMBEDDED IN CONCRETE, OR AT SLIP CRITICAL HIGH STRENGTH BOLTS WHICH SHALL BE TOUCHED UP AFTER CONNECTION IS COMPLETE. STRUCTURAL STEEL AND MISCELLANEOUS IRON WHICH IS TO HAVE SPRAY ON FIREPROOFING SHALL NOT BE PAINTED. STRUCTURAL STEEL PERMANENTLY EXPOSED TO WEATHER SHALL RECEIVE TWO COATS OF SEMI-GLOSS ALKYD ENAMEL COMPATIBLE WITH PRIMER.

METAL DECKING
METAL DECKING SHALL COMPLY W/ THE TYPE, SIZE, THICKNESS & ATTACHMENT SHOWN ON THE PLANS AND SHALL BE SUBSTANTIATED BY AN ICC REPORT. METAL DECKING SHALL BE GALVANIZED IN ACCORDANCE WITH ASTM A653, G60 FOR INTERIOR CONDITIONS AND G90 FOR EXTERIOR CONDITIONS.

MACHINE BOLTS, ANCHOR BOLTS AND THREADED RODS
BOLTS, NUTS, WASHERS AND RODS PERMANENTLY EXPOSED TO WEATHER SHALL BE HOT DIPPED GALVANIZED.

1. BOLTS SHALL CONFORM TO ASTM A307 GRADE A OR B OR A36.
2. ANCHOR BOLTS AND RODS SHALL CONFORM TO ASTM F1554 GR 36.
3. ALL BOLTS & LAG SCREWS SHALL HAVE STANDARD STEEL WASHERS, U.N.O.
4. NUTS SHALL BE AS SHOWN BELOW AND FINISH SHALL MATCH FASTENER.
5. BOLT HOLES SHALL BE STANDARD SIZE (BOLT DIA + 1/16") TYP, U.N.O.

FASTENER GRADE AND SIZE	NUT CLASS	NUT STYLE
ASTM A36 , ASTM A307A, F1554 1/4" TO 1-1/2"	ASTM A563-A	HEX
ASTM A36 , ASTM A307A, F1554, OVER 1-1/2" TO 4"	ASTM A563-A	HEAVY HEX
ASTM A307B, 1/4" TO 4"	ASTM A563-A	HEAVY HEX

HIGH STRENGTH BOLTS, NUTS, WASHERS & ANCHOR RODS
BOLTS, NUTS, WASHERS AND RODS PERMANENTLY EXPOSED TO WEATHER SHALL BE HOT DIPPED GALVANIZED.

1. BOLTS SHALL BE HEAVY HEX STRUCTURAL BOLTS PER ANSI B18.2.1 AND SHALL CONFORM TO THE REQUIREMENTS OF ASTM F3125 GRADE A325 OR A490. BOLTS SHALL BE TYPE 1 AND SHALL BE USED IN A BEARING CONNECTION, U.N.O.
2. TENSION CONTROL BOLT ASSEMBLIES SHALL CONFORM TO ASTM F1852 PER ASTM F3125.
3. DIRECT-TENSION INDICATORS SHALL CONFORM TO ASTM F959.
4. RODS SHALL CONFORM TO ASTM F1554 GR 55 U.N.O.
5. WASHERS SHALL BE FLAT CIRCULAR, RECTANGULAR OR SQUARE BEVELED WASHERS AND SHALL CONFORM TO ASTM F436 TYPE I. FINISH SHALL MATCH NUT. WASHERS SHALL BE INSTALLED UNDER THE ELEMENT BEING TURNED FOR A325 BOLTS AND UNDER BOTH THE HEAD AND THE NUT FOR A490 BOLTS PER ASTM F3125. WASHERS OVER OVERSIZED OR SLOTTED HOLES SHALL ALSO COMPLY WITH RCSC SPECIFICATIONS.
6. BOLT HOLES SHALL BE STANDARD SIZE (BOLT DIA + 1/16") TYP, U.N.O.
7. NUTS SHALL BE AS SHOWN BELOW AND FINISH SHALL MATCH FASTENER.

ITEM	FASTENER GRADE AND SIZE	NUT CLASS	NUT STYLE
BOLTS:			
ASTM F3125 GR A325	TYPE 1, UNCOATED	ASTM A563-C, C3,D,DH,DH3	HEAVY HEX
	TYPE 1, ZINC COATED	ASTM A563-DH	HEAVY HEX
	TYPE 3, UNCOATED	ASTM A563-C3, DH3	HEAVY HEX
ASTM F3125	TYPE 1, UNCOATED	ASTM A563-DH, DH3	HEAVY HEX
GR A490	TYPE 3, UNCOATED	ASTM A563-DH3	HEAVY HEX
RODS:			
ASTM F1554	1/4" TO 1-1/2", UNCOATED	ASTM A563-A	HEAVY HEX
	OVER 1-1/2" TO 3", UNCOATED	ASTM A563-DH	HEAVY HEX
	1/4" TO 3", ZINC COATED	ASTM A563-DH	HEAVY HEX

WELDING
ALL WELDING SHALL BE PERFORMED BY CERTIFIED WELDERS PER AWS "STANDARD QUALIFICATION PROCEDURE" TO PERFORM THE TYPE OF WORK REQUIRED. ALL FIELD WELDING SHALL BE PERFORMED BY LADBS LICENSED WELDERS FOR THE TYPE OF WELDING THAT IS REQUIRED. ALL WELDING SHALL BE IN ACCORDANCE WITH THE CURRENT AWS WELDING CODE. ARC WELDING ELECTRODES SHALL BE E70 SERIES FOR A36, A53, A500, A572 & A992 MATERIAL, AND E80 SERIES FOR A706 REINFORCING STEEL.

WELD METAL TOUGHNESS SHALL BE REPORTED ON THE ELECTRODE MANUFACTURER'S CERTIFICATE OF COMPLIANCE. ALL ELECTRODES SHALL BE LOW HYDROGEN WITH A MINIMUM CVN VALUE OF 20 FT-LBS AT -20 DEGREE F. EXCEPTIONS: METAL DECK WELDING, STAIR AND HANDRAIL WELDING, LIGHT GAGE STEEL WELDING.

TACK WELDS, AIR-ARC GOUGING AND FLAME CUTTING SHALL NOT BE PERFORMED WITHOUT ADEQUATE PREHEAT OR INCORPORATION INTO THE FINAL WELD.

THE FILLER METAL MANUFACTURER'S PUBLISHED RECOMMENDATIONS SHALL BE THE BASIS FOR DETERMINING THE ALLOWABLE RANGE OF ESSENTIAL VARIABLES FOR THE PRE QUALIFIED WPS. UNLESS NOTED OTHERWISE ON THE PLANS, BACK-UP BARS FOR CJP WELDS SHALL BE REMOVED FOLLOWED BY BACKGOUGING AND BACKWELDING.

LIGHT GAGE METAL FRAMING

MEMBERS
ALL LIGHT GAGE METAL FRAMING SHALL CONFORM TO ASTM A1003 GR33 TYPE H FOR MEMBERS WITH A DESIGNATION THICKNESS OF 33 AND 43 MILS AND ASTM A1003 GR50 TYPE H FOR MEMBERS WITH A DESIGNATION THICKNESS EQUAL TO OR GREATER THAN 54 MILS. STUDS SHALL HAVE PUNCHED WEBS. STUDS AND JOISTS SHALL HAVE STIFFENED FLANGES W/ 1-5/8" MIN WIDTH UNLESS NOTED OTHERWISE ON THE PLANS.

SHEET METAL SCREWS
SHEET METAL SCREWS SHALL CONFORM TO ASTM C1513

NO.	DATE	DRAWN	REVISIONS -	CHK'D	APP'D
A	3/20/25	-	30 % CONCEPT DESIGN		
B	4/25/25	-	FINAL CONCEPT DESIGN		
C	7/18/25	-	40 % DESIGN		
D	9/19/25	-	80 % DESIGN		

NOT FOR CONSTRUCTION

80% DESIGN REVIEW
SEP 19, 2025

Jacobs
2600 MICHELSON DRIVE, SUITE 500
IRVINE, CA 92612
T: (949) 224-7500
F: (949) 224-7501

CORNERSTONE structural engineering group
986 W. Alluvial, Suite 201
Fresno, California 93711
559.320.3200

REGISTERED PROFESSIONAL ENGINEER DUSTIN G. LEE No. S6623 EXP. 3/31/27 STRUCTURAL STATE OF CALIFORNIA

SCALE: AS SHOWN
DRAWN: M.REISZ
CHECKED: D.LEE
DESIGNED: D.ANDERSON
ENGINEER / ARCHITECT

TERMINAL ISLAND MARITIME SUPPORT FACILITY

MATERIAL SPECIFICATIONS

THE PORT OF LOS ANGELES
ENGINEERING DIVISION
425 S. PALOS VERDES STREET SAN PEDRO CA 90731-3309

DRAWING NUMBER 1-3513
SHEET NUMBER S-0.2

RVT: \\cseg-fr-fs01\sfhome$\SFHome\dlee\1-3513-JEG-11-S_Roadability Canopy_R25_dlee@cseg.com.rvt
DATE: 9/19/2025 4:10:36 PM

TESTING & SPECIAL INSPECTION

REQUIRED STRUCTURAL SPECIAL INSPECTION

GENERAL NOTES

• THE FOLLOWING TABLE OF SPECIAL INSPECTIONS AND TESTING ARE DERIVED FROM THE STRUCTURAL PROVISIONS OF THE CBC AND REFERENCED STANDARDS AND ARE FOR REFERENCE ONLY. AT A MINIMUM, ALL SPECIAL INSPECTIONS REQUIRED BY THE CALIFORNIA BUILDING CODE (CBC) SHALL BE PROVIDED. THE FOLLOWING TABLES ARE NOT INTENDED TO BE ALL INCLUSIVE, AND ARE PROVIDED FOR THE CONVENIENCE OF THE OWNER, TESTING AGENCY AND CONTRACTOR IN DEVELOPING THE SCOPE OF WORK FOR REQUIRED TESTING AND INSPECTION OF STRUCTURAL MATERIALS AND COMPONENTS. FINAL DEFINITION OF THIS SCOPE OF WORK IS TO BE DETERMINED BY THE TESTING AGENCY AND THE OWNER (OR OWNER'S AUTHORIZED AGENT).

• THE OWNER SHALL EMPLOY A SPECIAL INSPECTOR DURING CONSTRUCTION ON THE FOLLOWING TYPES OF WORK.

SPECIAL INSPECTOR

• THE SPECIAL INSPECTOR SHALL BE A QUALIFIED PERSON WHO SHALL DEMONSTRATE TO HIS COMPETENCE, TO THE SATISFACTION OF THE BUILDING OFFICIAL, FOR INSPECTION OF A PARTICULAR TYPE OF CONSTRUCTION OR OPERATION REQUIRING SPECIAL INSPECTION.
• TESTING AND INSPECTIONS WILL BE PERFORMED BY AN INDEPENDENT TESTING LABORATORY SELECTED AND EMPLOYED BY THE OWNER AND APPROVED BY THE BUILDING OFFICIAL. PROCEDURAL AND ACCEPTANCE CRITERIA ARE SET FORTH IN THE 2022 CALIFORNIA BUILDING CODE (CBC) SECTION 1704.

DUTIES AND RESPONSIBILITIES OF THE SPECIAL INSPECTOR

• THE SPECIAL INSPECTOR SHALL OBSERVE THE WORK ASSIGNED FOR CONFORMANCE WITH THE APPLICABLE PROJECT DRAWINGS AND SPECIFICATIONS.
• THE SPECIAL INSPECTOR SHALL FURNISH INSPECTION REPORTS TO THE BUILDING OFFICAL, THE OWNER OR OWNER'S DESIGNATED REPRESENTATIVE, THE ARCHITECT OR PROJECT MANAGER, THE STRUCTURAL ENGINEER OF RECORD, THE CONTRACTOR AND OTHER PERSONS DESIGNATED BY THE OWNER OR OWNER'S REPRESENTATIVE. ALL DISCREPANCIES SHALL BE BROUGHT TO THE IMMEDIATE ATTENTION OF THE CONTRACTOR FOR CORRECTION, THEN IF UNCORRECTED, TO THE PROPER DESIGN OF AUTHORITY AND TO THE BUILDING OFFICIAL.
• THE SPECIAL INSPECTOR SHALL SUBMIT A FINAL SIGNED REPORT STATING WHETHER THE WORK REQUIRING SPECIAL INSPECTION WAS, TO THE BEST OF THE INSPECTOR'S KNOWLEDGE, IN CONFORMANCE WITH THE PROJECT PLANS AND SPECIFICATIONS AND THE APPLICABLE WORKMANSHIP PROVISIONS OF THE CBC.

SYSTEM OR MATERIAL	CBC CODE REFERENCE	CODE OR STANDARD REFERENCE	FREQUENCY CONTINUOUS	FREQUENCY PERIODIC	REMARKS
FABRICATORS					
1. FABRICATORS	1704.2.5		-	X	SPECIAL INSPECTIONS APPLY TO VERIFICATION OF DETAILED FABRICATION AND QUALITY CONTROL PROCEDURES INCLUDING REVIEW FOR COMPLETENESS AND ADEQUACY RELATIVE TO THE CODE REQUIREMENTS
2. APPROVED FABRICATORS			-	X	SPECIAL INSPECTIONS APPLY TO REVIEW OF WRITTEN PROCEDURES AND QUALITY CONTROL MANUALS AND PERIODIC AUDITING OF FABRICATION PRACTICES
CONCRETE					
1. REINFORCING STEEL PLACEMENT INCLUDING PRESTRESSING TENDONS					SPECIAL INSPECTIONS APPLY TO BAR GRADE, SIZE, CONDITION, QUANTITY, SPACING, POSITION, SPLICES AND COVER
a) REINFORCEMENT IN SPECIAL MOMENT FRAMES, BOUNDARY ELEMENTS OF SPECIAL STRUCTURAL WALLS AND COUPLING BEAMS.		ACI 318: Ch. 20, 25.2,25.3,26.6.1-26.6.3	X	-	
b) ALL OTHER REINFORCEMENT			-	X	
2. REINFORCING BAR WELDING:					
a) VERIFY WELDABILITY OF REINFORCING BARS OTHER THAN ASTM A706	-	AWS D1.4 ACI 318: 26.6.4	-	X	
b) INSPECT SINGLE-PASS FILLET WELDS, MAXIMUM 5/16"			-	X	
c) INSPECT ALL OTHER WELDS			X	-	
3. INSPECT ANCHORS CAST IN CONCRETE	-	ACI 318: 17.8.2, 17.8.2.4	-	X	ALL BOLTS VISUALLY INSPECTED, SPECIAL INSPECTIONS APPLY TO BOLT GRADE, SIZE, CONDITION, LOCATION AND EMBEDMENT.
4. INSPECT ANCHORS POST INSTALLED IN HARDENED CONCRETE MEMBERS:					SPECIAL INSPECTOR SHALL VERIFY AND RECORD: ANCHOR TYPE, SIZE AND DIMENSIONS. HOLE DIMENSIONS AND CLEANLINESS. ANCHOR SPACING. EDGE DISTANCE. ANCHOR EMBEDMENT. TORQUE VALUE AS APPLICABLE). ADHESIVE TYPE AND EXPIRATION (AS APPLICABLE). ADHESIVE ANCHOR INSTALLER CERTIFICATIONS (AS APPLICABLE).
a) ADHESIVE ANCHORS INSTALLED IN HORIZONTALLY OR UPWARDLY INCLINED ORIENTATIONS TO RESIST SUSTAINED TENSION LOADS.	-	ACI 318: 17.8.2.4	X	-	
b) MECHNICAL ANCHORS AND ADHESIVE ANCHORS NOT DEFINED IN 4a.	-	ACI 318: 17.8.2	-	X	
5. VERIFY USE OF REQUIRED MIX DESIGN.	1904.1, 1904.2	ACI 318: Ch. 19, 26.4.3, 26.4.4	-	X	EACH TRUCK DELIVERY TICKET
6. PRIOR TO CONCRETE PLACEMENT FABRICATE SPECIMENS FOR STRENGTH TESTS, PERFORM SLUMP AND AIR CONTENT TESTS, AND DETERINE THE TEMPERATURE OF THE CONCRETE.	-	ASTM C31, ASTM C172 ACI 318: 26.5, 26.12	X	-	
7. INSPECT CONCRETE (AND SHOTCRETE) PLACEMENT FOR PROPER APPLICATION TECHNIQUES	-	ACI 318: 26.5	X	-	JOINT PREPARATIONS, DIMENSIONS, CLEANLINESS, TACKING AND BACKING TYPE (AS APPLICABLE), CONFIGURATION AND FINISH OF ACCESS HOLES
8. VERIFY MAINTENANCE OF SPECIFIED CURING TEMPERATURE AND TECHNIQUES	-	ACI 318: 26.5.3-26.5.5	-	X	SPECIAL INSPECTIONS APPLY TO VERIFYING SPECIFIED CURING IS PERFORMED, INCLUDING HOT AND COLD WEATHER PROVISIONS.
9. INSPECT PRESTRESSED CONCRETE FOR:					
a) APPLICATION OF PRESTRESSING FORCES	-	ACI 318: 26.10	X	-	
b) GROUTING OF BONDED PRESTRESSING TENDONS			X	-	
10. INSPECT ERECTION OF PRECAST CONCRETE MEMBERS	-	ACI 318: 26.9	-	X	
11. VERIFY IN-SITU CONCRETE STRENGTH PRIOR TO STRESSING OF TENDONS IN POST TENSIONED CONCRETE AND PRIOR TO REMOVAL OF FORMS FROM BEAMS & STRUCTURAL SLABS.	-	ACI 318: 26.11.2	-	X	
12. VERIFICATION OF FORM WORK	-	ACI 26.11.1.2(b)	-	X	SPECIAL INSPECTIONS APPLY TO SHAPE, LOCATION AND DIMENSIONS OF THE COCNRETE MEMBERS BEING FORMED
NON-SHRINK GROUT					
1. PLACEMENT OF NON-SHRINK GROUT			X	-	SPECIAL INSPECTIONS APPLY TO THICKNESS OF GROUT PAD TAKE TEST SPECIMENS OF NON-SHRINK GROUT
EPOXY INJECTION					
1. INSPECT THE SURFACE SEAL MATERIAL PLACEMENT AND ENTRY PORT LOCATIONS PRIOR TO PRESSURE EPOXY INJECTION.			-	X	
2. INSPECT PRESSURE EPOXY INJECTION PROCESS.			X	-	ENSURE THAT WORKMEN ARE EXPERIENCED, THAT PROPER EQUIPMENT IS BEING USED AND THAT EPOXY IS TRAVELLING THROUGHOUT THE CRACK.
MASONRY (LEVEL 2 INSPECTION) (FOR RISK CAT I,II & III BLDGS. NOT ALLOWED F					
1. VERIFY COMPLIANCE WITH APPROVED SUBMITTALS	1705.4	TMS 602 1.5	-	X	
2. AS MASONRY CONSTRUCTION BEGINS VERIFY THE FOLLOWING:					
a) PROPORTIONS OF SITE MIXED MORTAR	1705.4	TMS 602 2.1, 2.6 A, 2.6.C	-	X	
b) GRADE AND SIZE OF PRESTRESSING TENDONS		TMS 602 2.4 B & 2.4 H	-	X	
c) GRADE, TYPE AND SIZE OF REINFORCEMENT, CONNECTORS, ANCHOR BOLTS AND PRESTRESSING TENDONS AND ANCHORAGES		TMS 602 3.4 & 3.6 A	-	X	
d) PRESTRESSING TECHNIQUE		TMS 602 3.6 B	-	X	
e) PROPERTIES OF THIN-BED MORTAR FOR AAC MASONRY		TMS 602 2.1 C.1	X	X	CONTINUOUS FOR FIRST 5000 SQUARE FEET, PERIODIC AFTER FIRST 5000 SQUARE FEET
f) SAMPLE PANEL CONSTRUCTION		TMS 602 1.6 D	-	X	
3. PRIOR TO GROUTING, VERIFY THE FOLLOWING					
a) GROUT SPACE		TMS 602 3.2 D & 3.2 F	-	X	
b) PLACEMENT OF PRESTRESSING TENDONS AND ANCHORAGES		TMS 402 10.8 & 10.8, TMS 602 2.4 & 3.6	-	X	
c) PLACEMENT OF REINFORCEMENT, CONNECTORS, AND ANCHORS BOLTS		TMS 402 6.1, 6.3.1, 6.3.6 & 6.3.7, TMS 602 3.2 E & 3.4	-	X	
d) PROPORTIONS OF SITE-PREPARED GROUT AND PRESTRESSING GROUT FOR BONDED TENDONS		TMS 602 2.6 B & 2.4 G.1.b	-	X	
4. VERIFY COMPLIANCE OF THE FOLLOWING DURING CONSTRUCTION:					
a) MATERIALS AND PROCEDURES WITH THE APPROVED SUBMITTALS	1705.4	TMS 602 1.5	-	X	
b) PLACEMENT OF MASONRY UNITS AND MORTAR JOINT CONSTRUCTION		TMS 602 3.3 B	-	X	
c) SIZE & LOCATION OF STRUCTURAL MEMBERS		TMS 602 3.3 F	-	X	
d) TYPE, SIZE AND LOCATION OF ANCHORS, INCLUDING OTHER DETAILS OF ANCHORAGE OF MASONRY TO STRUCTURAL MEMBERS, FRAMES OR OTHER CONSTRUCTION		TMS 402 1.2.1e, 6.2.1 & 6.3.1	-	X	
e) WELDING OF REINFORCEMENT		TMS 402 6.1.6.1.2	X	-	
f) PREPARATION, CONSTRUCTION AND PROTECTION OF MASONRY DURING COLD WEATHER (BELOW 40°F) OR HOT WEATHER (ABOVE 90°F)		TMS 602 1.8 C & 1.8 D	-	X	
g) APPLICATION AND MEASUREMENT OF PRESTRESSING FORCE		TMS 602 3.6 B	X	-	
h) PLACEMENT OF GROUT AND PRESTRESSING GROUT FOR BONDED TENDONS		TMS 602 3.5 & 3.6 C	X	-	
i) PLACEMENT OF AAC MASONRY UNITS AND CONSTRUCTION OF THIN-BED MORTAR JOINTS.		TMS 602 3.3 B.9 & 3.3 F.1.b	X	X	CONTINUOUS FOR FIRST 5000 SQUARE FEET, PERIODIC AFTER FIRST 5000 SQUARE FEET
5. OBSERVE PREPARATION OF GROUT SPECIMENS, MORTAR SPECIMENS AND/OR PRISMS	1705.4	TMS 602 1.4 B.2.a.3, 1.4 B.2.b.3, 1.4 B.2.c.3, 1.4 B.3 & 1.4 B.4	X	-	SEE TESTING REQUIREMENT FOR PRISM TESTING. TMS 602 1.4. B.4.a

SYSTEM OR MATERIAL	CBC CODE REFERENCE	CODE OR STANDARD REFERENCE	FREQUENCY CONTINUOUS	FREQUENCY PERIODIC	REMARKS
STRUCTURAL STEEL					THE SPECIAL INSPECTIONS AND NONDESTRUCTIVE TESTING OF STRUCTURAL STEEL ELEMENTS IN BUILDINGS, STRUCTURES AND PORTIONS THEREOF SHALL BE IN ACCORDANCE WITH THE QUALITY ASSURANCE INSPECTION REQUIREMENTS OF: AISC 360.
1. FABRICATION OF STRUCTURAL ELEMENTS	1704.2.5		-	X	REFER TO INSPECTION OF FABRICATOR REQUIREMENTS
2. MATERIAL VERIFICATION OF STRUCTURAL STEEL	1705.2	AISC 360 A3.1	-	X	CERTIFIED MILL TEST REPORTS
3. MATERIAL VERIFICATION OF STEEL DECK	1705.2.2	SDI QA/QC	-	X	VERIFY THAT MILL CERTIFICATES SHOW METAL DECK IN COMPLIANCE WITH PROJECT SPECIFICATIONS.
4. INSPECT PLACEMENT OF METAL DECK PRIOR TO DECK BEING COVERED			-	X	
HIGH STRENGTH BOLTING		AISC 360 A3.3, N.5.6			
1. PRIOR TO BOLTING OPERATIONS		AISC 360: T. N5.6-1			
a) MANUFACTURER'S CERT AVAILABLE FOR FASTENER MATERIALS	-	RCSC 1.5, 2.1 AISC 360 A3.3, N3.2	-	X	VERIFY THAT MILL CERTIFICATIONS SHOW THAT BOLTS, NUTS & WASHERS COMPLY WITH PROJECT SPECIFICATIONS MARKED IN ACCORDANCE WITH ASTM REQUIREMENT
b) CORRECT FASTENERS SELECTED FOR THE JOINT DETAIL	2202.1	RCSC 1.5 AISC 360 A3.3 ,J3.1 APPLICABLE ASTM MATERIAL STD'S	-	X	CORRECT GRADE, TYPE, BOLT LENGTH IF THREADS ARE TO BE EXCLUDED FROM SHEAR PLANE
c) CORRECT BOLTING PROCEDURE FOR JOINT DETAIL			-	X	VERIFY IN CONFORMANCE WITH THE PROVISIONS OF THE RCSC SPECIFICATION
d) CONNECTING ELEMENTS, INCLUDING THE APPROPRIATE FRAYING SURFACE CONDITION AND HOLE PREPARATION, IF SPECIFIED, MEET APPLICABLE REQUIREMENTS			-	X	VERIFY IN CONFORMANCE WITH THE PROVISIONS OF THE RCSC SPECIFICATION
e) PRE-INSTALLATION VERIFICATION TESTING BY INSTALLATION PERSONNEL OBSERVED AND DOCUMENTED FOR FASTENER ASSEMBLIES AND METHODS USED			-	X	
f) PROTECTED STORAGE PROVIDED FOR BOLTS, NUTS, WASHERS AND OTHER FASTENER COMPONENTS			-	X	
2. DURING BOLTING OPERATIONS		AISC 360 T. N5.6-2			
a) FASTENER ASSEMBLIES PLACED IN ALL HOLES AND WASHERS AND NUTS ARE POSITIONED AS REQUIRED	17052.6	RCSC 7-9 AISC 360 J3.1 , J3.2, M2.5 AND N5.6	-	X	SPECIAL INSPECTOR NEED NOT BE PRESENT DURING ALL FINAL TIGHTENING OPERATIONS PROVIDED IT CAN BE VERIFIED THAT PROPER PROCEDURES WERE FOLLOWED (I.E. USE OF DTI's, "TWIST-OFF" TYPE BOLTS OR MATCH MARKING
b) JOINT BROUGHT TO THE SNUG TIGHT CONDITION PRIOR TO THE PRETENSIONING OPERATION			X	-	
c) FASTENER COMPONENTS NOT TURNED BY THE WRENCH PREVENTED FROM ROTATING			X	-	
d) FASTENERS ARE PRETENSIONED IN ACCORDANCE WITH THE RCSC SPECIFICATION, PROGRESSING SYSTEMATICALLY FROM THE MOST RIGID POINT TOWARD THE FREE EDGES			-	X	
3. AFTER BOLTING OPERATIONS		AISC 360 T. N5.6-3			
a) WELDER QUALIFICATION RECORDS AND CONTINUITY RECORDS			-	X	
4. MATERIAL VERIFICATION OF ANCHOR BOLTS AND THREADED RODS		AISC 360 A3.4	-	X	
5. MATERIAL VERIFICATION OF SHEAR STUD CONNECTORS		AISC 360 A3.6	-	X	
WELDING					
1. PRIOR TO WELDING		AISC 360: T. N5.4-1			COMPLAINCE WITH WELDING PROCEDURE SPECIFICATIONS AND PQR (IF APPLICABLE).
a) WELDER QUALIFICATION RECORDS AND CONTINUITY RECORDS			-	X	WPS SHALL BE AVAILABLE
b) MANUFACTURER CERTS FOR WELDING CONSUMABLES AVAILABLE			-	X	MATERIAL IDENTIFICATION (TYPE/GRADE)
c) WELDER IDENTIFICATION SYSTEM			X	-	THE FABRICATOR OR ERECTOR, AS APPLICABLE, SHALL MAINTAIN A SYSTEM BY WHICH A WELDER WHO HAS WELDED A JOINT OR MEMBER CAN BE IDENTIFIED. STAMPS, IF USED, SHALL BE THE LOW-STRESS TYPE.
d) FIT-UP OF GROOVE WELDS (INCLUDING JOINT GEOMETRY)			-	X	
e) FIT UP OG CJP GROOVE WELDS OF HSS T-, Y- AND K-JOINTS WITHOUT BACKING (INCLUDING JOINT GEOMETRY)			-	X	JOINT PREPARATIONS, DIMENSIONS, CLEANLINESS, TACKING AND BACKING TYPE (AS APPLICABLE), CONFIGURATION AND FINISH OF ACCESS HOLES
f) FIT-UP OF FILLET WELDS			-	X	
g) CHECK WELDING EQUIPMENT			-	X	
2. DURING WELDING		AISC 360: T. N5.4-2			
a) INSPECT ALL STRUCTURAL WELDING	1705.2.5		X	-	NOTE: THERE SHOULD BE NO WELDING OVER TACK WELDS, ENVIRONMENTAL CONDITIONS SHOULD MEET STANDARDS, WPS AND ESTABLISHED WELDING TECHNIQUES SHALL BE FOLLOWED PER AISC AND AWS STANDARDS.
3. AFTER WELDING		AISC 360: T. N5.4-3			
a) WELDS CLEANED			X	-	
b) SIZE, LENGTH AND LOCATION OF WELDS			-	X	WELDS SHALL MEET VISUAL ACCEPTANCE CRITERIA. NO ARC STRIKES WILL BE PRESENT. BRACKING AND WELD TABS ARE REMOVED (IF REQUIRED)
c) K-AREA			-	X	WHEN WELDING OF DOUBLER PLATES, CONTINUITY PLATES OR STIFFENERS HAS BEEN PERFORMED IN THE K-AREA, VISUALLY INSPECT THE WEB K-AREA FOR CRACKS WITHIN 3 IN. (75 MM) OF THE WELD.
d) WELD ACCESS HOLES IN ROLLED HEAVY SHAPES AND BUILT-UP HEAVY SHAPES			-	X	AFTER ROLLED HEAVY SHAPES (SEE SECTION A3.1c) AND BUILT-UP HEAVY SHAPES (SEE SECTION A3.1d) ARE WELDED, VISUALLY INSPECT THE WELD ACCESS HOLE FOR CRACKS.
h) REPAIR ACTIVITIES			-	X	DOCUMENTATION SHALL BE PROVIDED OF ACCEPTANCE OR REJECTION OF WELDED JOINTS OR MEMBERS
i) NO PROHIBITED WELDS HAVE BEEN ADDED WITHOUT THE APPROVAL OF THE EOR			-	X	
LIGHT GAGE METAL FRAMING					
1. MATERIAL VERIFICATION OF LIGHT GAGE METAL	1705.2		-	X	VERIFY THAT MILL CERTIFICATES SHOW STRUCTURAL STEEL AND MISCELENNEOUS IRON ISED IN FABRICATINO OF LIGHT GAGE METAL FRAMING IS IN COMPLAINCE WITH PROJECT SPECIFICATIONS.
2. INSTALLATION OF LIGHT GAGE METAL FRAMING PLYWOOD DIAPRHAGMS AND SHEARWALLS	1705.12.2				
a) INSPECT WELDING OPERATIONS OF THE SEISMIC FORCE RESISITNG SYSTEM			-	X	
b) SCREW ATTACHMENT, BOLTING, ANCHORING AND FASTENING OF ELEMENTS INCLUDING SHEARWALLS OF THE SEISMIC FORCE RESISTING SYSTEM			-	X	INSPECT ELEMENTS INCLUDING SHEARWALLS, BRACES, DIAPHRAGMS, COLLELCTORS AND HOLDOWNS
EXCEPTION: SINGLE SIDE SHEATHING WITH FASTENING @ 6" OC					
WOOD FRAMING					
1. PLYWOOD DIAPHRAGMS & SHEARWALLS	1705.12.1				
a) INPSECT FIELD GLUING OPERATIONS OF ELEMENTS OF THE SIESMIC FORCE RESISTING SYSTEM.			X	-	INSPECT ELEMENTS INCLUDING WOOD SHEARWALLS, WOOD DIAPHRAGMS, COLLELCTORS AND HOLDOWNS.
b) INSPECT NAILING, BOLTING, ANCHORING AND OTHER FASTENING OF ELEMENTS OF THE SEISMIC FORCE RESISTING SYSTEM			-	X	EXCEPTION: INSPECTION NOT REQ'D FOR SHEATING WITH NAILING AT 6" O.C.

REQUIRED GEOTECHNICAL SPECIAL INSPECTION

SYSTEM OR MATERIAL	CBC CODE REFERENCE	CODE OR STANDARD REFERENCE	FREQUENCY CONTINUOUS	FREQUENCY PERIODIC	REMARKS
SOILS					
1. INSPECT MATERIALS BELOW FOOTING FOR BEARING CAPACITY.	1705.6	GEOTECHNICAL REPORT	-	X	BY THE GEOTECHNICAL ENGINEER
2. INSPECT EXCAVATIONS FOR PROPER DEPTH.			-	X	
3. PERFORM CLASSIFICATION AND TESTING OF CONTROLLED FILL MATERIALS.			-	X	
4. VERIFY USE OF PROPER MATERIALS, DENSITIES, AND LIFT THICKNESS DURING PLACEMENT AND COMPACTION OF CONTROLLED FILL.			X	-	
5. PRIOR TO PLACEMENT OF CONTROLLED FILL, OBSERVE SUBGRADE AND VERIFY SITE HAS BEEN PREPARED PROPERLY.			-	X	
FOUNDATIONS					
1. PRIOR TO THE CONTRACTOR REQUESTING A BUILDING DEPARTMENT FOUNDATION INSPECTION, THE SOILS ENGINEERING SHALL ADVISE THE BUILDING DEPARTMENT IN WRITING.					SOILS ENGINEERING SHALL PROVIDE THE FOLLOWING IN WRITING: • THAT THE BUILDING PAD WAS PREPARED IN ACCORDANCE WITH THE SOILS REPORT • THAT THE UTILITY TRENCHES HAVE BEEN PROPERLY BACKFILLED AND COMPACTED. • THAT THE FOUNDATIONS COMPLY WITH THE SOILS REPORT AND APPROVED PLANS.
PILES					
1. VERIFY THAT PILE MATERIAL, SIZE, AND LENGTHS COMPLY WITH THE REQUIREMENTS LISTED IN THE STRUCTURAL DRAWINGS.	1705.7	GEOTECHNICAL REPORT	X	-	THE SOILS ENGINEER SHALL CONTINUOUSLY INSPECT PILE DRIVING. FOR STEEL ELEMENTS, PERFORM ADDITIONAL SPECIAL INSPECTIONS IN ACCORDANCE WITH SECTION 1705.2. FOR CONCRETE AND CONCRETE FILLED ELEMENTS, PERFORM TESTS AND SPECIAL INSPECTIONS IN ACCORDANCE WITH 1705.3.
2. INSPECT THE INDICATOR PILES AND PDA MEASUREMENTS TO VERIFY THAT THE CAPACITIES OF TEST ELEMENTS MEET THE REQUIRED CAPACITIES LISTED IN THE STRUCTURAL DRAWINGS.			X	-	
3. VERIFY PLACEMENT OF PILES MATCH THOSE INDICATED ON THE STRUCTURAL			X	-	
4. PREPARE DAILY PILE DRIVING LOGS CONTAINING THE FOLLOWING INFORMATION: NUMBER OF THE PILE (LOCATION SHOWN ON THE PLANS), TOP ELEVATION OF PILE, PLUMBINESS OF PILE, TYPE AND SIZE OF HAMMER USED TO DRIVE PILE, LIST ANY DAMAGE TO PILE THAT OCCURRED DURING DRIVING, DEPTH OF PILE (CUT OFF ELEVATION TO PILE TIP), NUMBER OF BLOWS FOR EACH FOOT OF PENETRATION FOR THE ENTIRE PILE LENGTH.			X	-	

REQUIRED STRUCTURAL TESTING

SYSTEM OR MATERIAL	CBC CODE REFERENCE	CODE OR STANDARD REFERENCE	FREQUENCY/REMARKS
CONCRETE			
1. SAMPLING	1705.3	ASTM C172	ONE TEST AT POINT OF TRUCK DISCHARGE FOR 150 CY OR FRACTION THEREOF FOR EACH TYPE OF CONCRETE. ADDITIONAL TESTS REQUIRED WHEN CONSISTENCY SEEMS TO HAVE CHANGED
2. SLUMP		ASTM C143	
3. AIR CONTENT		ASTM C173	VOLUMETRIC METHOD, ONE FOR EACH 150 CY PLACED FOR EACH TYPE OF AIR-ENTRAINED CONCRETE
4. TEMPERATURE		ASTM 1064	TEST HOURLY WHEN AIR TEMPERATURE IS 50°F AND BELOW AND WHEN 85°F AND ABOVE, AND EACH TIME A SET OF COMPRESSION TEST SPECIMENS ARE MADE
5. TAKE LABORATORY CURED COMPRESSION TEST SPECIMENS		ASTM C31	TAKE (1) SET OF 3 STANDARD CYLINDERS FOR EACH 150 CY OF CONCRETE OR 5000 SQ. FT. (2000 SQ. FT. DSA) OF SLABS & WALL OR FRACTION THEREOF FOR EACH TYPE OF CONCRETE TAKEN EACH DAY. MOLD AND STORE CYLINDERS FOR LABORATORY CURED TEST SPECIMENS EXCEPT WHEN FIELD CURED TEST SPECIMENS ARE REQUIRED
6. TAKE FIELD CURED COMPRESSION TEST SPECIMENS WHEN CONTRACTOR PLANS TO REMOVE FORM WORK, FALSE WORK OR SHORING SOONER THAN 7 DAYS FOR VERTICAL FORM WORK AND 14 DAYS FOR SHORING AND FALSE WORK; OR WHEN POST TENSIONING IS REQUIRED		ASTM C31	TAKE (1) SET OF 3 STANDARD CYLINDERS FOR EACH 150 CY OF CONCRETE OR 5000 SQ. FT. (2000 SQ. FT. DSA) OF SLABS & WALL OR FRACTION THEREOF FOR EACH TYPE OF CONCRETE TAKEN EACH DAY. MOLD AND STORE CYLINDERS FOR LABORATORY CURED TEST SPECIMENS EXCEPT WHEN FIELD CURED TEST SPECIMENS ARE REQUIRED
7. TEST COMPRESSIVE STRENGTH		ASTM C39	TEST (1) SPECIMEN AT 7 DAYS AND (2) SPECIMENS AT 28 DAYS
8. TEST DRYING SHRINKAGE		ASTM C157	TAKE (1) SET OF 3 DRYING SHINKAGE SAMPLES FOR EACH DAYS POUR OF SLABS ON GRADE, SUSPENDED SLABS, AND POST TENSIONED SLABS.
NON-SHRINK GROUT			
1. TAKE TEST SPECIMENS			
EPOXY INJECTION			
1. SAMPLING.			PROVIDE A MINIMUM OF (3) 4" ø CORE SAMPLES FOR FULL CRACK DEPTH AT CONCRETE OR CONCRETE MASONRY FOR APPROXIMATELY THE FIRST 100 SQUARE FEET OF REPAIR FROM REPRESENTATIVE LOCATIONS SELECTED BY ENGINEER.
2. VISUALLY INSPECT CORE SAMPLES			INSPECT FOR 80% MINIMUM PENETRATION OF EPOXY
3. TEST BOND STRENGTH OF EPOXY		AASHTO T-237	PERFORM SLANT SHEAR TEST. FAILURE OF CORE SAMPLE MATRIX SHALL OCCUR PRIOR TO FAILURE OF THE EPOXY (6500 PSI MINIMUM)
MASONRY (LEVEL 2 INSPECTION) (FOR RISK CAT I,II & III BLDGS. NOT ALLOWED FOR			
1. TEST PRISMS	1705.4	TMS 602 1.4 B	CONTINUOUSLY INSPECT PREPARATION OF PRISMS. PROVIDE (3) FOR EACH 5000 SQ. FT. OF WALL
POST INSTALLED ANCHORS			
1. TEST ANCHORS FOR STRUCTURAL APPLICATION	1910.5	ANCHOR ICC REPORT	TEST ANCHORS PER CBC 1910A.5 AND ANCHORS ICC REPORT WITH THE FOLLOWING FREQUENCY: 100% FOR STRUCTURAL APPLICATIONS
EXCEPTIONS:			
SILL PLATE BOLTING			10%
AT INTERFACE DOWELS AT CAST-IN-PLACE CONCRETE OR SHOTCRETE WALL OVERLAYS			25%
SLAB-ON-GRADE COLD JOINT DOWELS			AS APPROVED BY THE ENGINEER
2. TEST ANCHORS FOR NON STRUCTURAL APPLICATIONS SUCH AS EQUIPMENT ANCHORAGE (ANCHORS NOT SHOWN ON STRUCTURAL DRAWINGS)			50%
3. TESTING OF ANCHORS SHALL BE DONE IN THE PRESENCE OF THE PROJECT INSPECTOR AND A REPORT OF THE TEST RESILTS SHALL BE SUBMITTED TO DSA. IF ANY ANCHORS FAIL THE TESTING REQUIREMENTS, THE ADDITIONAL TESTING REQUIREMENTS SHALL BE ACCEPTABLE TO THE ENFORCEMENT AGENCY			
4. TESTING VALUES AS NOTED IN THE POST-INSTALLED ANCHOR TESTING LOADS ON SHEET			
HIGH STRENGTH BOLTING			
1. PERFORM TENSION CALIBRATION TESS WITH THE CONTRACTORS TOOLS ON 3 BOLT ASSEMBLIES	1705.2.1	RCSC SPECIFICATIONS	FOR EACH DIAMETER, LENGTH, GRADE, PRODUCTION LOT AND TIGHTENING METHOD TO BE USED ON THE PROJECT.
2. TESTING OF HIGH-STRENGTH BOLTS, NUTS AND WASHERS	17052.6		
WELDING: NON DESTRUCTIVE TESTING			EXCEPTION: THE RATE OF TESTING FOR ULTRASONIC WELDS MAY BE REDUCED TO 25% IF THE FAILURE RATE MEETS THE REQUIREMENTS OF AISC 341 APPENDIX Q.
1. MAGNETIC PARTICLE TESTING	1705.2.1		100% OF WEBS WHERE WELDING OF PLATES HAD OCCURRED IN THE K-AREA
2. ULTRASONIC TESTING			100% OF COMPLETE JOINT PENETRATION GROOVE WELDS ON MATERIALS 5/16" THICK AND GREATER
3. MAGNETIC PARTICLE TESTING			25% OF COMPLETE JOINT PENETRATION GROOVE WELDS OF BEAM TO COLUMN JOINTS
4. ULTRA SONIC TESTING			100% OF COMPLETE JOINT PENETRATION GROOVE WELDS ON TEE AND CORNER JOINTS WHERE MATERIAL THICKER THAN 3/4" IS CONNECTED TO BASE METAL THICKER THAN 1.5"
5. MAGNETIC PARTICLE TESTING			100% OF BEAM COPES AND ACCESS HOLES AT WELDED SPLICES
6. MAGNETIC PARTICLE TESTING			100% OF THE ENDS OF WELDS FROM WHICH WELD TABS HAVE BEEN REMOVED, EXCEPT AT CONTINUITY PLATES

REQUIRED GEOTECHNICAL TESTING

SYSTEM OR MATERIAL	CBC CODE REFERENCE	CODE OR STANDARD REFERENCE	FREQUENCY	REMARKS
SOILS				
1. PROCTOR TESTS OF THE STRUCTURAL FILL MATERIAL	1705.6	ASTM 698	EACH MATERIAL TO BE COMPACTED	BY GEOTECHNICAL ENGINEER
2. STRUCTURAL FILL IN-PLACE DENSITY		ASTM D1556	EACH 500 SF OF EACH LIFT PLACED EACH DAY	

NO.	DATE	DRAWN	REVISIONS -	CHK'D	APP'D
A	3/20/25	-	30 % CONCEPT DESIGN		
B	4/25/25	-	FINAL CONCEPT DESIGN		
C	7/18/25	-	40 % DESIGN		
D	9/19/25	-	80 % DESIGN		

NOT FOR CONSTRUCTION

NO.	DATE	DRAWN	REVISIONS -	CHK'D	APP'D

80% DESIGN REVIEW SEP 19, 2025

Jacobs
2600 MICHELSON DRIVE, SUITE 500
IRVINE, CA 92612
T: (949) 224-7500
F: (949) 224-7501
CORNERSTONE structural engineering group
966 W. Alvarado, Suite 201
Fallbrook, California 92711
858.320.3200

REGISTERED PROFESSIONAL ENGINEER — DUSTYN G. LEE — No. S6622 — EXP. 3/31/27 — STRUCTURAL — STATE OF CALIFORNIA

SCALE: AS SHOWN
DRAWN: M.REISZ
CHECKED: D.LEE
DESIGNED: D.ANDERSON
ENGINEER / ARCHITECT

TERMINA

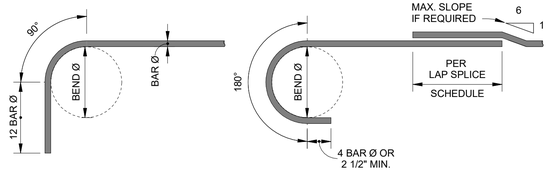

BAR SIZE	MIN. BEND Ø
#3 THRU #8	6 BAR Ø
#9 THRU #11	8 BAR Ø

MAIN REINFORCEMENT

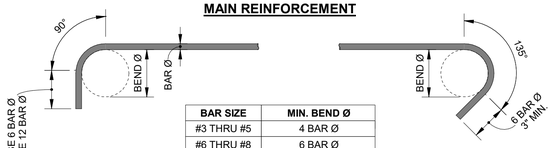

BAR SIZE	MIN. BEND Ø
#3 THRU #5	4 BAR Ø
#6 THRU #8	6 BAR Ø

STIRRUPS & TIES

REINFORCING BAR HOOKS

1 1/2" = 1'-0"

1 S-0.4

MINIMUM LAP SPLICE SCHEDULE

BAR SIZE	POSITION	LAP SPLICE LENGTH IN INCHES					
		F'c ≤ 3500 PSI		F'c = 4000 PSI		F'c = 5000 PSI	
		CLASS A	CLASS B	CLASS A	CLASS B	CLASS A	CLASS B
#3	TOP	24	28	24	25	24	24
	BOTTOM	24	24	24	24	24	24
#4	TOP	29	38	25	33	24	29
	BOTTOM	24	29	24	25	24	24
#5	TOP	36	47	31	41	28	36
	BOTTOM	28	36	24	31	24	28
#6	TOP	43	56	37	49	34	44
	BOTTOM	33	43	29	37	26	34
#7	TOP	63	81	54	71	49	63
	BOTTOM	48	63	42	54	38	49
#8	TOP	72	93	62	81	56	72
	BOTTOM	55	72	48	62	43	56
#9	TOP	81	105	70	91	63	81
	BOTTOM	62	81	54	70	48	63
#10	TOP	91	118	79	102	71	92
	BOTTOM	70	91	61	79	54	71
#11	TOP	101	131	87	114	78	102
	BOTTOM	78	101	67	87	60	78

NOTES:
1. LAP SPLICE LOCATIONS SHALL BE APPROVED BY THE ENGINEER.
2. LAP SPLICES SHALL BE CONTACT (CLASS B) FOR CAST-IN-PLACE CONCRETE UNLESS NOTED OTHERWISE.
3. TOP BARS ARE HORIZONTAL BARS WITH 12 INCHES OR MORE OF FRESH CONCRETE BELOW THE BAR.
4. WHEN TWO BARS OF DIFFERENT SIZE ARE SPLICED, USE THE LARGER LAP LENGTH.
5. STAGGER LAP SPLICES WHERE POSSIBLE. WHERE CLASS A SPLICES ARE CALLED OUT ON THE DRAWINGS, STAGGER LAP SPLICES 24 INCHES FOR ADJACENT BARS.
6. LAP SPLICES NOTED ARE FOR NORMAL WEIGHT CONCRETE. LAP SPLICE LENGTHS SHALL BE MULTIPLIED BY 1.3 FOR LIGHTWEIGHT CONCRETE.
7. NO SPLICES ARE ALLOWED FOR #14 AND #18 REINFORCEMENT.
8. BAR DEVELOPMENT LENGTHS EQUAL CLASS A LAP SPLICE LENGTHS.
9. ENTIRE BUNDLED BARS SHALL NOT BE LAP SPLICED. LAP SPLICES OF INDIVIDUAL BARS WITHIN THE BUNDLE SHALL NOT OVERLAP.
10. AT CONTRACTOR'S OPTION, MECHANICAL COUPLERS MAY BE SUBSTITUTED FOR LAP SPLICES. MECHANICAL COUPLERS SHALL HAVE AN ICC REPORT AND SHALL DEVELOP 125% OF THE YIELD STRENGTH OF THE BAR.

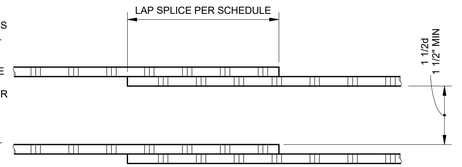

CONTACT SPLICE

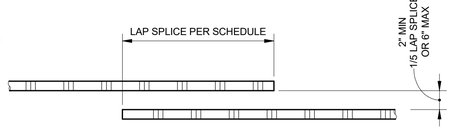

NON - CONTACT SPLICE

LAP SPLICE SCHEDULE FOR CONCRETE

NO SCALE

2 S-0.4

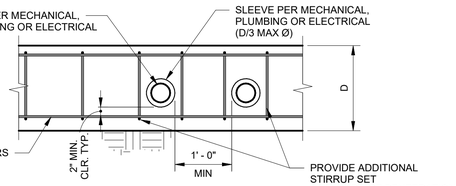

CLEAR OF TOP & BOTTOM REINFORCING

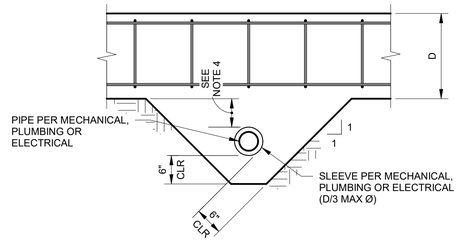

BELOW BOTTOM REINFORCING

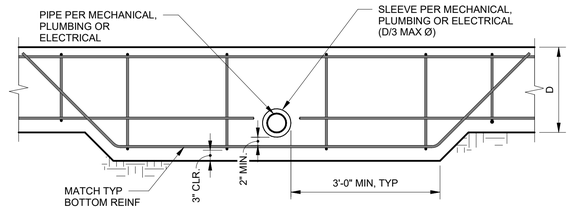

AT BOTTOM REINFORCING

NOTES:
1. SLEEVE ID 2" LARGER THAN PIPE OD OR BELL OD.
2. SEAL VOID BETWEEN PIPE AND SLEEVE WITH ELASTIC WATERPROOF MATERIAL, TYP.
3. DETAIL APPLICABLE TO MAXIMUM 8"∅ SLEEVE.
4. NO FTG EXTENSION REQ'D FOR PIPE DEEPER THAN 12" BELOW FTG (SLEEVE STILL REQ'D).
5. WHERE PENETRATION CONFLICTS WITH REBAR TIE, OMIT TIE & PROVIDE 1 ADDITIONAL TIE EACH SIDE OF SLEEVE.

FOOTING PENETRATIONS

NO SCALE

6 S-0.4

FOUNDATION CONCRETE MAY BE PLACED DIRECTLY INTO NEAT EXCAVATIONS PROVIDED THE FOUNDATION TRENCH WALLS ARE STABLE AS DETERMINED BY THE SOILS ENGINEER.

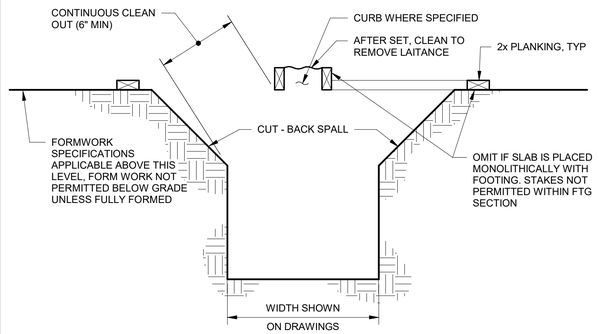

MANDATORY MIN FORMWORK (UNLESS FULLY FORMED)

FORMING DETAIL

NO SCALE

3 S-0.4

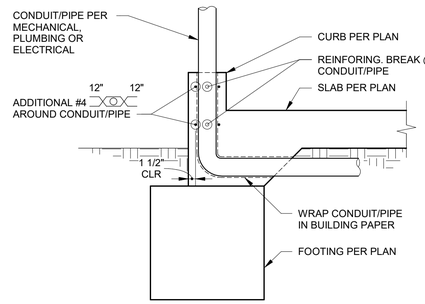

CURB PENETRATION

NO SCALE

4 S-0.4

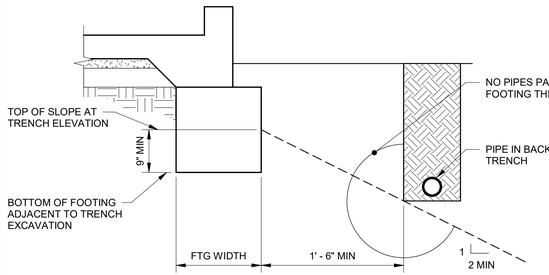

EXCAVATION PARALLEL TO FTG

NO SCALE

5 S-0.4

MINIMUM CONCRETE COVER SCHEDULE

ELEMENT	CLEAR COVER
CONCRETE CAST AGAINST AND PERMANENTLY EXPOSED TO EARTH	3"
CONCRETE EXPOSED TO EARTH OR WEATHER:	
#5 AND SMALLER	1 1/2"
#6 AND LARGER	2"
CONCRETE NOT EXPOSED TO WEATHER OR IN CONTACT WITH GROUND:	
SLABS, WALLS & JOISTS:	
#11 AND SMALLER	3/4"
#14 AND #18	1 1/2"
BEAMS & COLUMNS PRIMARY REINFORCEMENT, TIES, STIRRUPS, & SPIRALS	1 1/2"
SHELLS & FOLDED PLATE MEMBERS	
#5 AND SMALLER	1/2"
#6 AND LARGER	3/4"

NOTES:
1. COVERS NOTED SHALL BE USED UNLESS NOTED OTHERWISE ON THE CONTRACT DOCUMENTS.
2. COVERS NOTED ARE FOR CAST-IN-PLACE, NON-PRESTRESSED MEMBERS.
3. MINIMUM CLEAR COVER FOR BUNDLED BARS SHALL BE THE LESSER OF THE EQUIVALENT DIAMETER OF THE BUNDLE AND 2".

MINIMUM CONCRETE COVER SCHEDULE

NO SCALE

7 S-0.4

NO.	DATE	DRAWN	REVISIONS -	CHK'D	APP'D
A	3/20/25	-	30 % CONCEPT DESIGN		
B	4/25/25	-	FINAL CONCEPT DESIGN		
C	7/18/25	-	40 % DESIGN		
D	9/19/25	-	80 % DESIGN		

NOT FOR CONSTRUCTION

80% DESIGN REVIEW SEP 19, 2025

Jacobs
2600 MICHELSON DRIVE, SUITE 500
IRVINE, CA 92612
T: (949) 224-7500
F: (949) 224-7501
CORNERSTONE structural engineering group
366 W. Alluvial, Suite 201
Fresno, California 93711
559.323.3200

REGISTERED PROFESSIONAL ENGINEER — DUSTIN G. LEE — No. S6623 EXP. 3/31/27 — STRUCTURAL — STATE OF CALIFORNIA

SCALE:	AS SHOWN
DRAWN:	M.REISZ
CHECKED:	D.LEE
DESIGNED:	D.ANDERSON
	ENGINEER / ARCHITECT

TERMINAL ISLAND MARITIME SUPPORT FACILITY

TYPICAL DETAILS NO. 1

THE PORT OF LOS ANGELES
ENGINEERING DIVISION
425 S. PALOS VERDES STREET SAN PEDRO CA 90731-3309

DRAWING NUMBER: 1-3513
SHEET NUMBER: S-0.4

RVT: tcaap-fnd-rbrfnnd#GPhomd#ee1-3513-EG-11-5_Rbdability Canopy_R25_dlee@aeg.com.rvt
DATE: 9/19/2025 4:45:53 PM

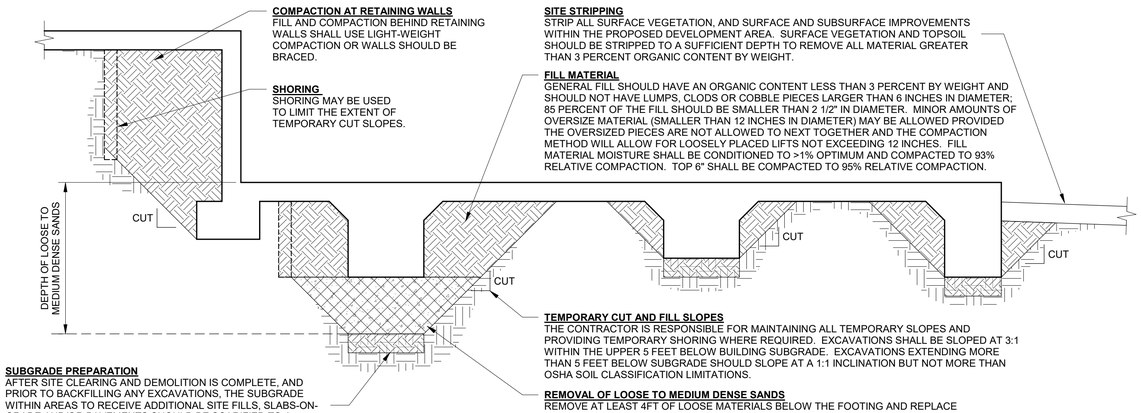

COMPACTION AT RETAINING WALLS
FILL AND COMPACTION BEHIND RETAINING WALLS SHALL USE LIGHT-WEIGHT COMPACTION OR WALLS SHOULD BE BRACED.

SHORING
SHORING MAY BE USED TO LIMIT THE EXTENT OF TEMPORARY CUT SLOPES.

SITE STRIPPING
STRIP ALL SURFACE VEGETATION, AND SURFACE AND SUBSURFACE IMPROVEMENTS WITHIN THE PROPOSED DEVELOPMENT AREA. SURFACE VEGETATION AND TOPSOIL SHOULD BE STRIPPED TO A SUFFICIENT DEPTH TO REMOVE ALL MATERIAL GREATER THAN 3 PERCENT ORGANIC CONTENT BY WEIGHT.

FILL MATERIAL
GENERAL FILL SHOULD HAVE AN ORGANIC CONTENT LESS THAN 3 PERCENT BY WEIGHT AND SHOULD NOT HAVE LUMPS, CLODS OR COBBLE PIECES LARGER THAN 6 INCHES IN DIAMETER; 85 PERCENT OF THE FILL SHOULD BE SMALLER THAN 2 1/2" IN DIAMETER. MINOR AMOUNTS OF OVERSIZE MATERIAL (SMALLER THAN 12 INCHES IN DIAMETER) MAY BE ALLOWED PROVIDED THE OVERSIZED PIECES ARE NOT ALLOWED TO NEXT TOGETHER AND THE COMPACTION METHOD WILL ALLOW FOR LOOSELY PLACED LIFTS NOT EXCEEDING 12 INCHES. FILL MATERIAL MOISTURE SHALL BE CONDITIONED TO >1% OPTIMUM AND COMPACTED TO 93% RELATIVE COMPACTION. TOP 6" SHALL BE COMPACTED TO 95% RELATIVE COMPACTION.

SUBGRADE PREPARATION
AFTER SITE CLEARING AND DEMOLITION IS COMPLETE, AND PRIOR TO BACKFILLING ANY EXCAVATIONS, THE SUBGRADE WITHIN AREAS TO RECEIVE ADDITIONAL SITE FILLS, SLABS-ON-GRADE AND/OR PAVEMENTS SHOULD BE SCARIFIED TO A DEPTH OF 6 INCHES, MOISTURE CONDITIONED TO >1% OPTIMUM AND COMPACTED TO 95% RELATIVE COMPACTION.

TEMPORARY CUT AND FILL SLOPES
THE CONTRACTOR IS RESPONSIBLE FOR MAINTAINING ALL TEMPORARY SLOPES AND PROVIDING TEMPORARY SHORING WHERE REQUIRED. EXCAVATIONS SHALL BE SLOPED AT 3:1 WITHIN THE UPPER 5 FEET BELOW BUILDING SUBGRADE. EXCAVATIONS EXTENDING MORE THAN 5 FEET BELOW SUBGRADE SHOULD SLOPE AT A 1:1 INCLINATION BUT NOT MORE THAN OSHA SOIL CLASSIFICATION LIMITATIONS.

REMOVAL OF LOOSE TO MEDIUM DENSE SANDS
REMOVE AT LEAST 4FT OF LOOSE MATERIALS BELOW THE FOOTING AND REPLACE THE EXCAVATIONS WITH CONTROLLED LOW STRENGTH MATERIAL (CLSM).

BUILDING PAD PREPARATION
NO SCALE — 1 / S-0.5

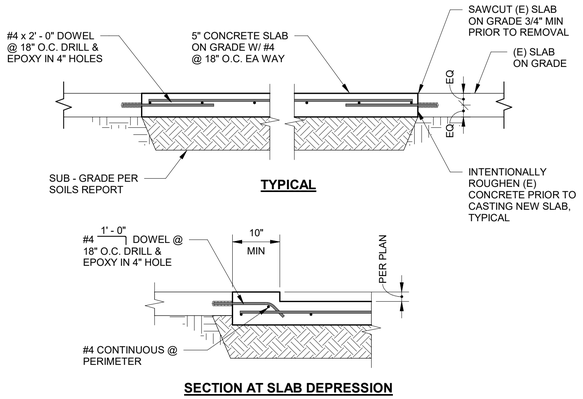

SLAB INFILL
NO SCALE — 2 / S-0.5

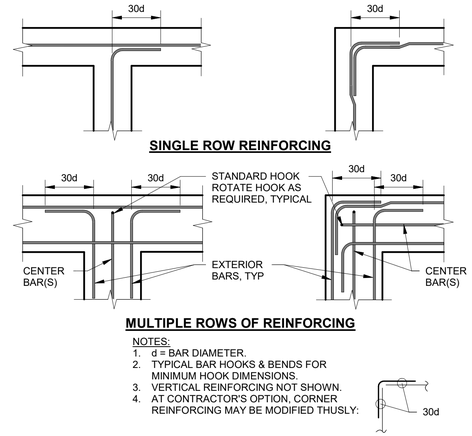

NOTES:
1. d = BAR DIAMETER.
2. TYPICAL BAR HOOKS & BENDS FOR MINIMUM HOOK DIMENSIONS.
3. VERTICAL REINFORCING NOT SHOWN.
4. AT CONTRACTOR'S OPTION, CORNER REINFORCING MAY BE MODIFIED THUSLY:

FOOTING, WALL & CURB INTERSECTIONS
3/4" = 1'-0" — 3 / S-0.5

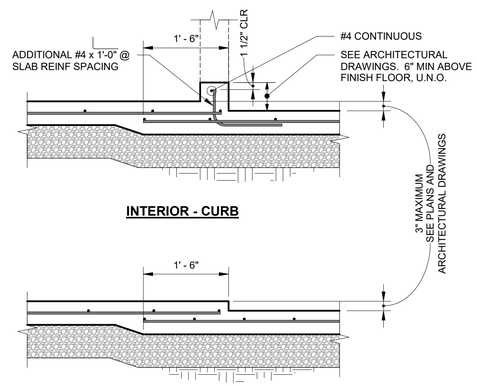

SLAB DEPRESSION
NO SCALE — 4 / S-0.5

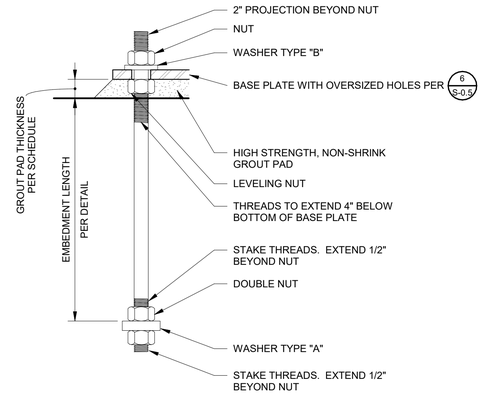

ANCHOR ROD		WASHER [1]		HEX NUT	GROUT PAD THICKNESS
SIZE	MATERIAL	TYPE	SIZE		
1"Ø	F1554 GRADE 105	A	3"x3/4"x0'-3" PLATE W/ 1 1/16"Ø HOLE CENTERED	ASTM A563	2"
		B [2]	3"x3/8" PLATE* W/ 1 1/16"Ø HOLE CENTERED		

1. CIRCULAR OR SQUARE WASHERS MEETING THE WASHER SIZE ARE ACCEPTIBLE.

ANCHOR BOLT
NO SCALE — 5 / S-0.5

NOTES:
1. APPLIES TO COLUMNS WHERE OVERSIZED HOLES GREATER THAN ROD DIAMETER PLUS 3/16" ARE REQUESTED.
2. AT LATERAL RESISTING FRAME COLUMNS, WELDING OF PLATE WASHER TO BASE PLATE IS REQUIRED.
3. AS A RESULT OF THE INCREASED SIZE OF THE WELD WASHER, BASE PLATE DIMENSIONS MAY NEED TO BE INCREASED TO MEET MINIMUM EDGE DISTANCE AND WELD REQUIREMENTS AS OCCURS. RESULTING DIMENSIONS SHALL BE VERIFIED BY ENGINEERING PRIOR TO FABRICATION.
4. A STANDARD SIZED HOLE IN PLATE WASHER SHALL NOT EXCEED THE THREADED ROD DIAMETER PLUS 1/16".

WASHER SCHEDULE			
THREADED ROD DIAMETER	MAXIMUM OVERSIZED HOLE DIA.	WASHER SIZE	WELD SIZE AT FRAME COLUMNS
1"	1 1/4"	3" x 3/8"	1/4

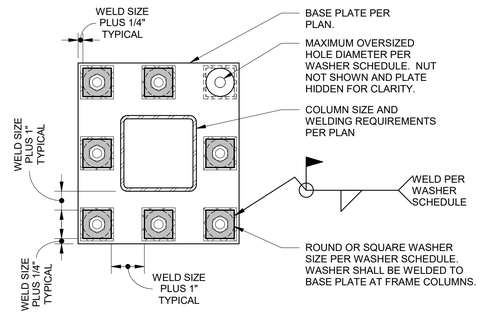

OVERSIZED HOLES IN BASE PLATE
NO SCALE — 6 / S-0.5

NO.	DATE	DRAWN	REVISIONS -	CHK'D	APP'D
A	3/20/25	-	30 % CONCEPT DESIGN		
B	4/25/25	-	FINAL CONCEPT DESIGN		
C	7/18/25	-	40 % DESIGN		
D	9/19/25	-	80 % DESIGN		

NOT FOR CONSTRUCTION

NO.	DATE	DRAWN	REVISIONS -	CHK'D	APP'D

80% DESIGN REVIEW SEP 19, 2025

Jacobs
2600 MICHELSON DRIVE, SUITE 500
IRVINE, CA 92612
T: (949) 224-7500
F: (949) 224-7501
CORNERSTONE structural engineering group
3990 W. Ahlvstd, Suite 201
Fresno, California 93711
559.320.3200

REGISTERED PROFESSIONAL ENGINEER — DUSTIN G. LEE — No. S6623 EXP. 3/31/27 — STRUCTURAL — STATE OF CALIFORNIA

SCALE:	AS SHOWN
DRAWN:	M.REISZ
CHECKED:	D.LEE
DESIGNED:	D.ANDERSON
	ENGINEER / ARCHITECT

TERMINAL ISLAND MARITIME SUPPORT FACILITY

TYPICAL DETAILS NO. 2

THE PORT OF LOS ANGELES
ENGINEERING DIVISION
425 S. PALOS VERDES STREET SAN PEDRO CA 90731-3309

DRAWING NUMBER: 1-3513
SHEET NUMBER: S-0.5

RVT: \\cwg-fs01\Revit$\Home\dlee\1-3513-JEG-11-S_Roadability Canopy_R25_dlee@cwg.com.rvt
DATE: 9/19/2025 4:10:54 PM

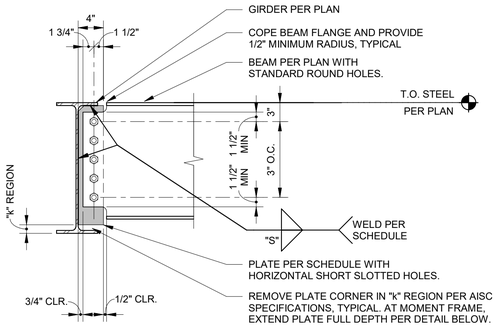

BEAM DEPTH LESS THAN OR EQUAL TO GIRDER

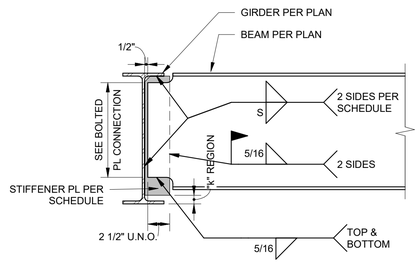

WELDED PLATE CONNECTION

CONNECTION SCHEDULE				
BEAM SIZE	PLATE (3)		WELD SIZE "S"	BOLTS (2)
	MIN. DEPTH	THICKNESS		NO. & SIZE (1,4)
W21x	18"	3/8"	5/16	(6) 3/4"Ø
W24x	18"	1/2"	3/8	(6) 3/4"Ø

NOTES:
1. FOR SINGLE COLUMN OF BOLTS, UNLESS NOTED OTHERWISE.
2. ALL BOLTS SHALL BE A325N AND ORIENTED IN THE SAME DIRECTION, UNLESS NOTED OTHERWISE.
3. STEEL PLATE SHALL BE ASTM A36, UNLESS NOTED OTHERWISE. AT COLLECTOR AND MOMENT CONNECTIONS, PLATE SHALL BE A572 GR. 50
4. COPE FLANGES OR LOCATE TAB PLATE TO BE 1/16" MIN. CLEAR OF "k" PER AISC SPECIFICATIONS.

BEAM CONNECTION

NO SCALE

1 S-0.6

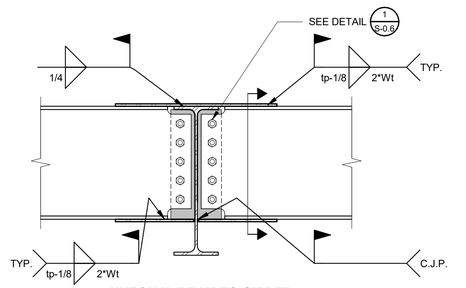

UNEQUAL BEAM TO GIRDER

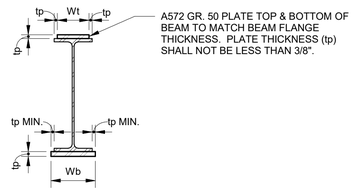

SECTION A-A

GRAVITY MOMENT CONNECTION

NO SCALE

2 S-0.6

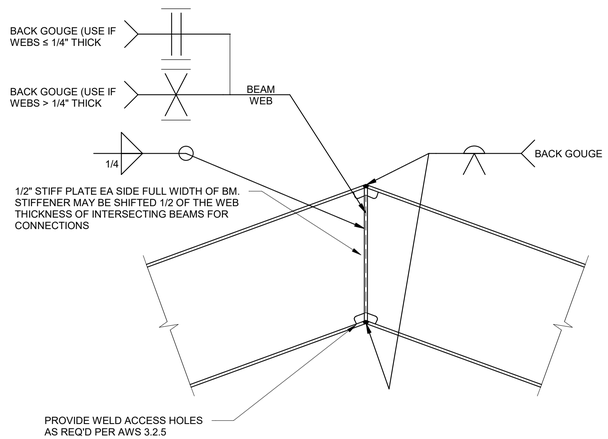

PITCHED BEAM SPLICE

NO SCALE

3 S-0.6

NO.	DATE	DRAWN	REVISIONS -	CHK'D	APP'D
A	3/20/25	-	30 % CONCEPT DESIGN		
B	4/25/25	-	FINAL CONCEPT DESIGN		
C	7/18/25	-	40 % DESIGN		
D	9/19/25	-	80 % DESIGN		

NOT FOR CONSTRUCTION

NO.	DATE	DRAWN	REVISIONS -	CHK'D	APP'D
			80% DESIGN REVIEW SEP 19, 2025		

Jacobs
2600 MICHELSON DRIVE, SUITE 500
IRVINE, CA 92612
T: (949) 224-7500
F: (949) 224-7501

CORNERSTONE structural engineering group
Walnut, California 91711
909.320.3200

REGISTERED PROFESSIONAL ENGINEER — DUSTIN G. LEE — No. S6623 EXP. 3/31/27 — STRUCTURAL — STATE OF CALIFORNIA

SCALE: AS SHOWN
DRAWN: M.REISZ
CHECKED: D.LEE
DESIGNED: D.ANDERSON
ENGINEER / ARCHITECT

TERMINAL ISLAND MARITIME SUPPORT FACILITY

TYPICAL DETAILS NO. 3

THE PORT OF LOS ANGELES
ENGINEERING DIVISION
425 S. PALOS VERDES STREET SAN PEDRO CA 90731-3309

DRAWING NUMBER: 1-3513
SHEET NUMBER: S-0.6

RVT: \\cwg-fs01\ffsmnt\SPI\home\dlee\1-3513-JEG-11-S_Roadability Canopy_R25_dlee@cwg.com.rvt
DATE: 9/19/2025 4:10:54 PM

K J H G F E D C B A

1 2 3 4 5 6 7 8 9 10 11 12 13 14

STEEL DECK SCHEDULE										
TYPE	PRODUCT	IAPMO REPORT	HEIGHT (INCH)	GAGE	PROFILE	-Ix MIN (IN ^{4})	+Ix MIN (IN ^{4})	-Sx MIN (IN^3)	+Sx MIN (IN^3)	REMARKS
1	VERCO PLN3-32	ER 2018	3	18	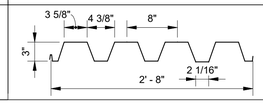	1.237	1.207	0.722	0.671	ROOF DECK

NOTE:
1. METAL DECK SHALL BE CONTINUOUS OVER 3 SPANS WHERE POSSIBLE. CONTRACTOR SHALL DETERMINE SHORING REQUIREMENTS FOR DECK INSTALLATION.
2. METAL DECK SHALL BEAR A MINIMUM OF 2 INCHES AT ENDS AND 4 INCHES AT INTERMEDIATE SUPPORTING MEMBERS.
3. DECK FLUTES SHALL RUN PERPENDICULAR TO SUPPORTING MEMBERS UNLESS SHOWN OTHERWISE.
4. MECHANICAL, ELECTRICAL, OR PLUMBING UTILITIES HUNG FROM STEEL DECK SHALL NOT EXCEED 100# PER HANGER AND SHALL BE SPACED SO THAT THE TOTAL UTILITY WEIGHT DOES NOT EXCEED 5 PSF.
5. THE CONTRACTOR SHALL PROTECT STEEL DECK DURING CONSTRUCTION. ANY DECKING WHICH IS FOUND TO BE DAMAGED SHALL BE REMOVED AND REPLACED AT THE CONTRACTOR'S EXPENSE.

METAL DECK SCHEDULE — 1 / S-0.7
NO SCALE

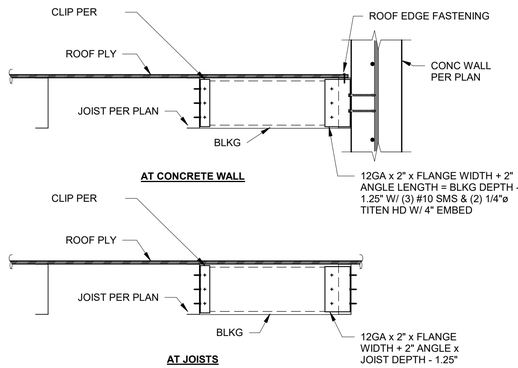

LGS - TYPICAL JOIST BLOCKING DETAIL — 2 / S-0.7
1" = 1'-0"

METAL DECK ATTACHMENT (3)				
TYPE	TRANSVERSE SUPPORTS (1,2)	PARALLEL SUPPORTS (2)	SIDE SEAMS	REMARKS
1	32/5	PUDDLE WELDS @ 12" O.C.	VERCO SIDELAP CONNECTIONS @ 24" O.C.	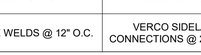

NOTE:
1. WELD DESIGNATION IS AS FOLLOWS:
   A. 36/7/4 DENOTES 36 INCH WIDE DECK, 7 WELDS @ END PANEL SUPPORTS, 4 WELDS @ INTERIOR PANEL SUPPORTS.
   B. 24/4 DENOTS 24 INCH WIDE DECK, 4 WELDS AT ALL PANEL SUPPORTS.
2. PUDDLE WELDS SHALL HAVE 1/2" EFFECTIVE DIAMETER. SEE (6 / S-0.7)
3. A HEADED STUD WELDED THRU DECK MAY REPLACE A SINGLE DECK WELD.

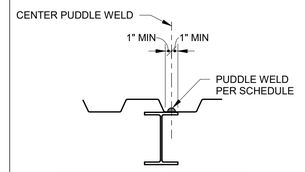

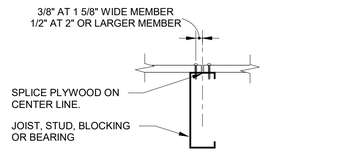

NOTES:
1. PLYWOOD SHEETS ARE TO BE AS LARGE AS POSSIBLE. JOINTS ARE TO BE CENTERED OVER BEARINGS. SHEET SIZE LESS THAN 24" IN DIMENSION ARE NOT PERMITTED. STAGGER ALL END JOINTS OF SHEATHING. OUTSIDE FACE GRAINS TO RUN PERPENDICULAR TO BEARING. BLOCKING ALL JOINTS AND EDGES.
2. MINIMUM FRAMING THICKNESS = 20 GAUGE, U.N.O.
3. PROVIDE MINIMUM #8 SCREWS FOR FRAMING THICKNESS OF 18 GAUGE OR LESS AND MINIMUM #10 SCREWS FOR FRAMING THICKNESS OF MORE THAN 18 GAUGE.

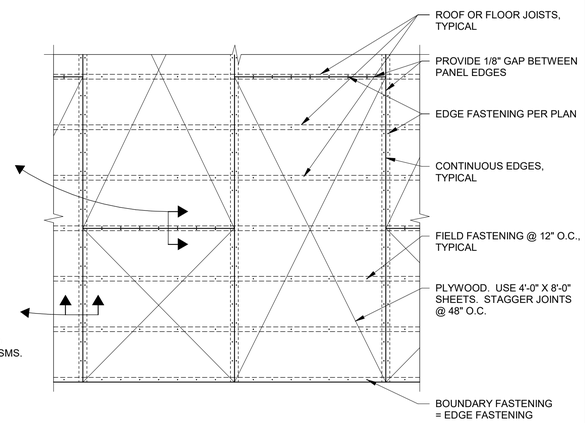

PLYWOOD DIAPHRAGM — 3 / S-0.7
NO SCALE

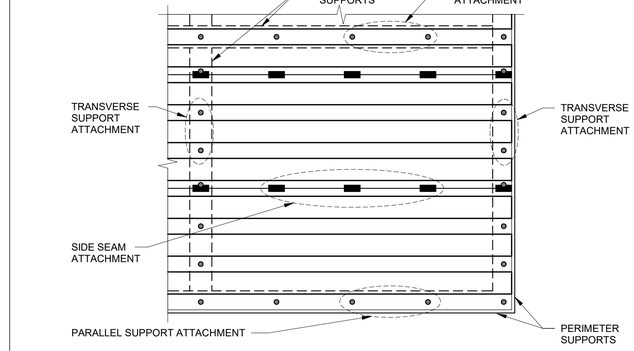

METAL DECK ATTACHMENT SCHEDULE — 5 / S-0.7
NO SCALE

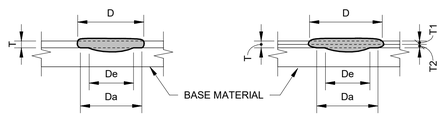

NOTE:
Da = (D - T)
De = (0.7D - 1.5T)

SINGLE THICKNESS OF SHEET

NOTE:
Da = (D - 2T)
De = (0.7D - 1.5T)

DOUBLE THICKNESS OF SHEET

GAGE		VISIBLE WELD SIZE
(0.0283")	22	3/4" DIA. (0.774)
(0.0346")	20	3/4" DIA. (0.788)
(0.0451")	18	7/8" DIA. (0.811)
(0.0566")	16	7/8" DIA. (0.836)

NOTE:
BASED ON 1/2" EFFECTIVE WELD
ARC SPOT WELDS PER A.W.S. D1.3/ D1.3M
D = (De + 1.5T)/0.7 VISIBLE DIAMETER
Da = RESULTING AVERAGE DIAMETER
De = EFFECTIVE DIAMETER

ARC SPOT WELDS PER AWS D1.3/D1.3M — 6 / S-0.7
NO SCALE

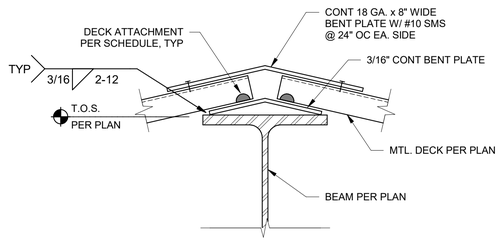

TYP. MTL. DECK AT RIDGE — 7 / S-0.7
NO SCALE

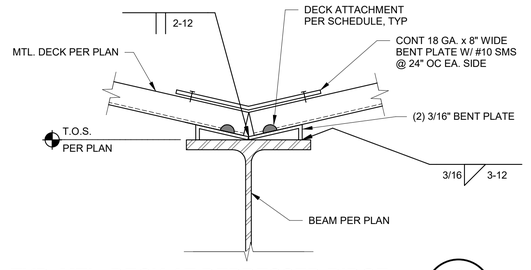

TYP. MTL. DECK AT DEPRESSED RIDGE — 8 / S-0.7
3" = 1'-0"

NO.	DATE	DRAWN	REVISIONS -	CHK'D	APP'D
A	3/20/25	-	30 % CONCEPT DESIGN		
B	4/25/25	-	FINAL CONCEPT DESIGN		
C	7/18/25	-	40 % DESIGN		
D	9/19/25	-	80 % DESIGN		

NOT FOR CONSTRUCTION

NO.	DATE	DRAWN	REVISIONS -	CHK'D	APP'D

80% DESIGN REVIEW SEP 19, 2025

Jacobs
2600 MICHELSON DRIVE, SUITE 500
IRVINE, CA 92612
T: (949) 224-7500
F: (949) 224-7501
CORNERSTONE structural engineering group
999 W. Ativoal, Suite 201
Fresno, California 93711
559.320.3200

REGISTERED PROFESSIONAL ENGINEER — DUSTIN G. LEE — No. S6623 — EXP. 3/31/27 — STRUCTURAL — STATE OF CALIFORNIA

SCALE:	AS SHOWN
DRAWN:	M.REISZ
CHECKED:	D.LEE
DESIGNED:	D.ANDERSON
	ENGINEER / ARCHITECT

TERMINAL ISLAND MARITIME SUPPORT FACILITY

TYPICAL DETAILS NO. 4

THE PORT OF LOS ANGELES
ENGINEERING DIVISION
425 S. PALOS VERDES STREET SAN PEDRO CA 90731-3309

DRAWING NUMBER: 1-3513
SHEET NUMBER: S-0.7

RVT: \\corp.lh.lah\root\emdat\SP\home\dlee\1-3513-JEC-11-3_Roadability Canopy_R25_dlee@corp.com.rvt
DATE: 9/19/2025 4:10:35 PM

1 2 3 4 5 6 7 8 9 10 11 12 13 14

K J H G F E D C B A

LAP SPLICE SCHEDULE		
BAR SIZE	STANDARD LAP LENGTH	REDUCED LAP LENGTH
#3	16"	12"
#4	30"	18"
#5	45"	26"
#6	54"	50"
#7	63"	63"
#8	72"	72"

NOTES:
1. LAP SPLICE LOCATION SHALL BE APPROVED BY THE ENGINEER.
2. THE REDUCED LAP LENGTH MAY BE USED WHEN BOTH THE CLEAR COVER & BAR SPACING BETWEEN ADJACENT BARS IS EQUAL TO OR GREATER THAN 3".
3. WHEN TWO BARS OF DIFFERENT SIZE ARE SPLICED, USE LONGER LAP LENGTH.

LAP SPLICE SCHEDULE FOR MASONRY — 1 / S-0.8

NO SCALE

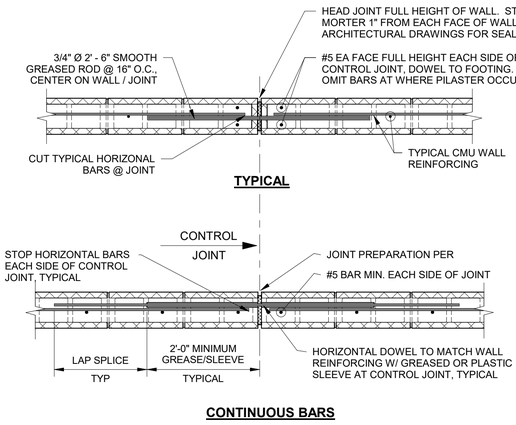

CONTROL JOINT — 2 / S-0.8

NO SCALE

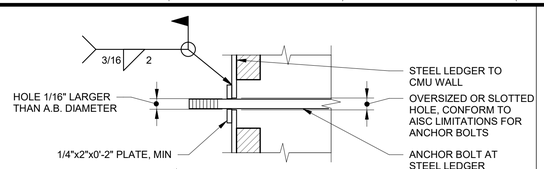

BOLT SIZE	EMBEDMENT	MIN NOMINAL WALL THICKNESS
1/2"Ø	4"	6"
5/8"Ø	5"	8"
3/4"Ø	5"	8"
7/8"Ø	7"	10"
1"Ø	9"	12"

NOTES:
1. BOLT PLACEMENT SHALL CONFORM TO CBC SECTION 2104A.1.3.1, AND ACI 530 SECTION 9.1.6.
2. USE WELDED WASHER WHERE OVERSIZED OR SLOTTED HOLES ARE USED AT CONTRACTOR'S OPTION WHERE STANDARD ROUND HOLE WOULD OTHERWISE BE RQUIRED.

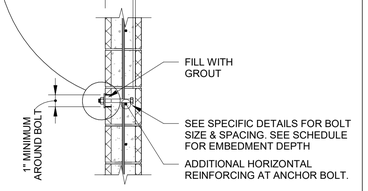

BOLT IN CMU WALL — 3 / S-0.8

NO SCALE

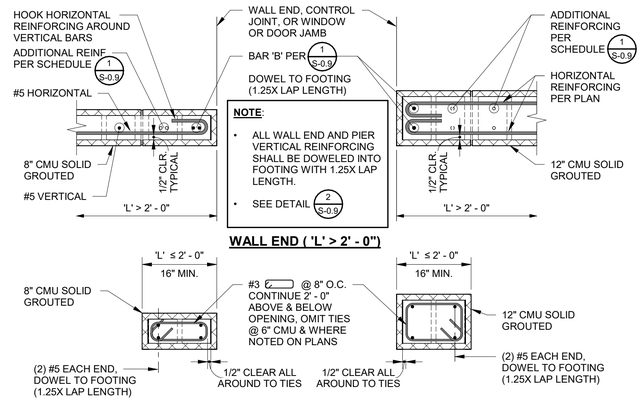

WALL END / PIER — 4 / S-0.8

NO SCALE

NOTE:
COMPLY WITH THIS DETAIL WHEN GROUTING IS STOPPED FOR ONE HOUR OR LONGER

CMU HORIZONTAL CONSTRUCTION JOINT — 5 / S-0.8

NO SCALE

NOTE:
1. NO CONDUIT ALLOWED IN WALLS LESS THAN 8" NOMINAL THICKNESS.
2. NO CONDUIT TO OCCUR IN THE SAME CELL AS VERTICAL REINFORCEMENT.
3. ALLUMINUM CONDUITS ARE NOT PERMITTED TO BE PLACED IN CMU WALL.

PLAN

CONDUIT IN CMU WALLS — 6 / S-0.8

3/4" = 1'-0"

PLAN

TYPICAL METAL STUD WALL TO CMU — 7 / S-0.8

3/4" = 1'-0"

LINTEL — 8 / S-0.8

NO SCALE

HILTI KWIK-BOLT 3				
ANCHOR DIAMETER (IN)	MINIMUM EMBEDMENT (IN)	ALLOWABLE SHEAR (LB)	ALLOWABLE TENSION (LB)	TEST (2x ALLOWABLE TENSION) (LB)
1/4	2	342	432	432
3/8	2 1/2	1054	626	626
1/2	3 1/2	1853	724	724
5/8	4	2123	1035	1035
3/4	4 3/8	2627	1368	1368

NOTES:
1. TABULATED VALUES BASED ON 80% OF THE ICC REPORT ESR-1385. INSTALLATION SHALL BE IN ACCORDANCE WITH THE ICC REPORT.
2. ANCHORS MUST BE INSTALLED A MINIMUM OF 1 3/8" FROM ANY VERTICAL JOINT.
3. EMBEDMENT DEPTH IS MEASURED FROM OUTSIDE FACE OF CMU.
4. ANCHOR LOCATIONS ARE LIMITED TO ONE PER MASONRY CELL WITH A MINIMUM SPACING OF 8" O.C. THE MINIMUM EDGE DISTANCE IS 12".
5. TENSION TEST 50% OF ANCHORS. IF ANY ANCHOR FAILS, ALL ANCHORS MUST BE TESTED.

EXPANSION ANCHORS IN GROUT FILLED CMU — 9 / S-0.8

3/4" = 1'-0"

NO.	DATE	DRAWN	REVISIONS -	CHK'D	APP'D
A	3/20/25	-	30 % CONCEPT DESIGN		
B	4/25/25	-	FINAL CONCEPT DESIGN		
C	7/18/25	-	40 % DESIGN		
D	9/19/25	-	80 % DESIGN		

NOT FOR CONSTRUCTION

NO.	DATE	DRAWN	REVISIONS -	CHK'D	APP'D

80% DESIGN REVIEW SEP 19, 2025

Jacobs
2600 MICHELSON DRIVE, SUITE 500
IRVINE, CA 92612
T: (949) 224-7500
F: (949) 224-7501
CORNERSTONE structural engineering group
969 W. Alluvial, Suite 201
Fresno, California 93711
559.325.5200

REGISTERED PROFESSIONAL ENGINEER — DUSTIN G. LEE — No. S8623 EXP. 3/31/27 — STRUCTURAL — STATE OF CALIFORNIA

SCALE: AS SHOWN
DRAWN: M.REISZ
CHECKED: D.LEE
DESIGNED: D.ANDERSON
ENGINEER / ARCHITECT

TERMINAL ISLAND MARITIME SUPPORT FACILITY

TYPICAL DETAILS NO. 5

THE PORT OF LOS ANGELES
ENGINEERING DIVISION
425 S. PALOS VERDES STREET SAN PEDRO CA 90731-3309

DRAWING NUMBER: 1-3513
SHEET NUMBER: S-0.8

RVT: \\cwp-fs01\dfsroot$\SH\Home\dlee\1-3513-JEC-11-S_Rowability Canopy_R25_dlee@cwp.com.rvt
DATE: 9/19/2025 4:10:56 PM

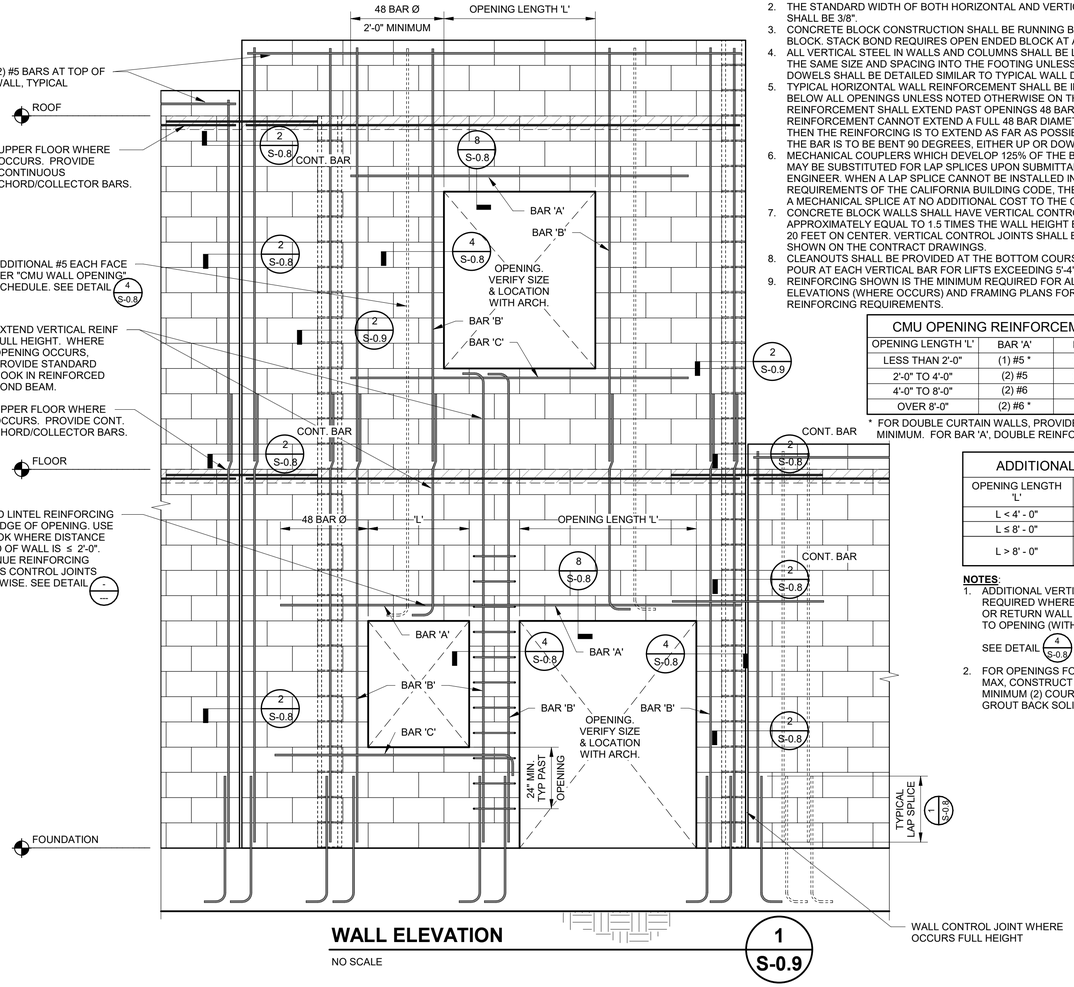

WALL ELEVATION

NO SCALE

1 / S-0.9

REINFORCED STRUCTURAL MASONRY NOTES:

1. ALL CELLS IN CONCRETE BLOCK CONSTRUCTION SHALL BE FULLY GROUTED.
2. THE STANDARD WIDTH OF BOTH HORIZONTAL AND VERTICAL MORTAR JOINTS SHALL BE 3/8".
3. CONCRETE BLOCK CONSTRUCTION SHALL BE RUNNING BOND WITH OPEN ENDED BLOCK. STACK BOND REQUIRES OPEN ENDED BLOCK AT ALL BOND BEAM UNITS.
4. ALL VERTICAL STEEL IN WALLS AND COLUMNS SHALL BE LAPPED WITH DOWELS OF THE SAME SIZE AND SPACING INTO THE FOOTING UNLESS NOTED OTHERWISE. DOWELS SHALL BE DETAILED SIMILAR TO TYPICAL WALL DOWELS.
5. TYPICAL HORIZONTAL WALL REINFORCEMENT SHALL BE INSTALLED ABOVE AND BELOW ALL OPENINGS UNLESS NOTED OTHERWISE ON THE DRAWINGS. REINFORCEMENT SHALL EXTEND PAST OPENINGS 48 BAR DIAMETERS, MINIMUM. IF REINFORCEMENT CANNOT EXTEND A FULL 48 BAR DIAMETERS PAST THE OPENING, THEN THE REINFORCING IS TO EXTEND AS FAR AS POSSIBLE AND THE REST OF THE BAR IS TO BE BENT 90 DEGREES, EITHER UP OR DOWN.
6. MECHANICAL COUPLERS WHICH DEVELOP 125% OF THE BARS' YIELD STRENGTH MAY BE SUBSTITUTED FOR LAP SPLICES UPON SUBMITTAL AND REVIEW BY THE ENGINEER. WHEN A LAP SPLICE CANNOT BE INSTALLED IN ACCORDANCE WITH THE REQUIREMENTS OF THE CALIFORNIA BUILDING CODE, THE ENGINEER MAY SPECIFY A MECHANICAL SPLICE AT NO ADDITIONAL COST TO THE OWNER.
7. CONCRETE BLOCK WALLS SHALL HAVE VERTICAL CONTROL JOINTS AT A SPACING APPROXIMATELY EQUAL TO 1.5 TIMES THE WALL HEIGHT BUT NO GREATER THAN 20 FEET ON CENTER. VERTICAL CONTROL JOINTS SHALL BE CONSTRUCTED AS SHOWN ON THE CONTRACT DRAWINGS.
8. CLEANOUTS SHALL BE PROVIDED AT THE BOTTOM COURSE OF EVERY GROUT POUR AT EACH VERTICAL BAR FOR LIFTS EXCEEDING 5'-4" IN HEIGHT.
9. REINFORCING SHOWN IS THE MINIMUM REQUIRED FOR ALL OPENINGS. SEE WALL ELEVATIONS (WHERE OCCURS) AND FRAMING PLANS FOR ADDITIONAL REINFORCING REQUIREMENTS.

CMU OPENING REINFORCEMENT SCHEDULE

OPENING LENGTH 'L'	BAR 'A'	BAR 'B'	BAR 'C'
LESS THAN 2'-0"	(1) #5 *	(1) #5 *	(1) #5 *
2'-0" TO 4'-0"	(2) #5	(1) #5 *	(1) #5 *
4'-0" TO 8'-0"	(2) #6	(2) #5	(2) #5
OVER 8'-0"	(2) #6 *	(2) #6	(2) #5

* FOR DOUBLE CURTAIN WALLS, PROVIDE BAR EACH FACE MINIMUM. FOR BAR 'A', DOUBLE REINFORCING IN SINGLE LAYER.

ADDITIONAL REINFORCING [1,2]

OPENING LENGTH 'L'	ADDITIONAL VERTICAL TRIM STEEL EACH SIDE
L < 4' - 0"	NO ADDITIONAL BARS
L ≤ 8' - 0"	(2) ADDITIONAL #5 BARS
L > 8' - 0"	(2) #5 @ 8" O.C. (4) ADDITIONAL TOTAL

NOTES:

1. ADDITIONAL VERTICAL TRIM STEEL NOT REQUIRED WHERE PILASTER, COLUMN, OR RETURN WALL OCCURS ADJACENT TO OPENING (WITHIN 1'-4")

   SEE DETAIL 4/S-0.8

2. FOR OPENINGS FOR ROUND DUCTS 24" Ø MAX, CONSTRUCT SQUARE OPENING W/ MINIMUM (2) COURSES ABOVE & BELOW & GROUT BACK SOLID AROUND DUCT.

NOTE:

- ALL VERTICAL REINFORCING SHALL BE DOWELED INTO FOOTING WITH STANDARD HOOK.
- FOR LAP SPLICE REQUIREMENTS IN CMU, SEE DETAIL 1/S-0.8

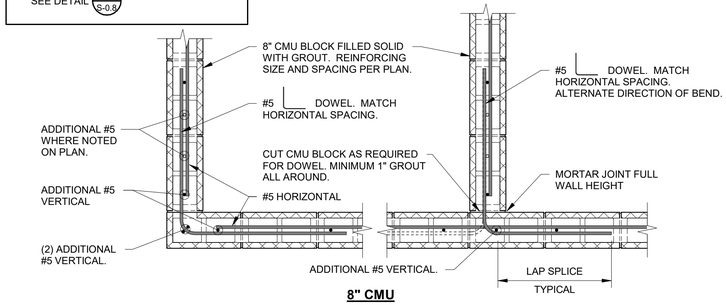

8" CMU

WALL CORNERS & INTERSECTIONS

NO SCALE

2 / S-0.9

NO.	DATE	DRAWN	REVISIONS -	CHK'D	APP'D
A	3/20/25	-	30 % CONCEPT DESIGN		
B	4/25/25	-	FINAL CONCEPT DESIGN		
C	7/18/25	-	40 % DESIGN		
D	9/19/25	-	80 % DESIGN		

NOT FOR CONSTRUCTION

NO.	DATE	DRAWN	REVISIONS -	CHK'D	APP'D
			80% DESIGN REVIEW SEP 19, 2025		

Jacobs
2600 MICHELSON DRIVE, SUITE 500
IRVINE, CA 92612
T: (949) 224-7500
F: (949) 224-7501
CORNERSTONE structural engineering group
999 W. Ahlvind, Suite 201
Palm Springs, California 92211
559.320.3200

REGISTERED PROFESSIONAL ENGINEER — DUSTIN G. LEE — No. S6623 EXP. 3/31/27 — STRUCTURAL — STATE OF CALIFORNIA

SCALE: AS SHOWN
DRAWN: M.REISZ
CHECKED: D.LEE
DESIGNED: D.ANDERSON
ENGINEER / ARCHITECT

TERMINAL ISLAND MARITIME SUPPORT FACILITY

TYPICAL DETAILS NO. 6

THE PORT OF LOS ANGELES
ENGINEERING DIVISION
425 S. PALOS VERDES STREET SAN PEDRO CA 90731-3309

DRAWING NUMBER: 1-3513
SHEET NUMBER: S-0.9

RVT: \\cwg-fs01\rfirmrdt$\Home\dlee\1-3513-JEG-11-S_Roadability Canopy_R25_dlee@cwg.com.rvt
DATE: 9/19/2025 4:10:56 PM

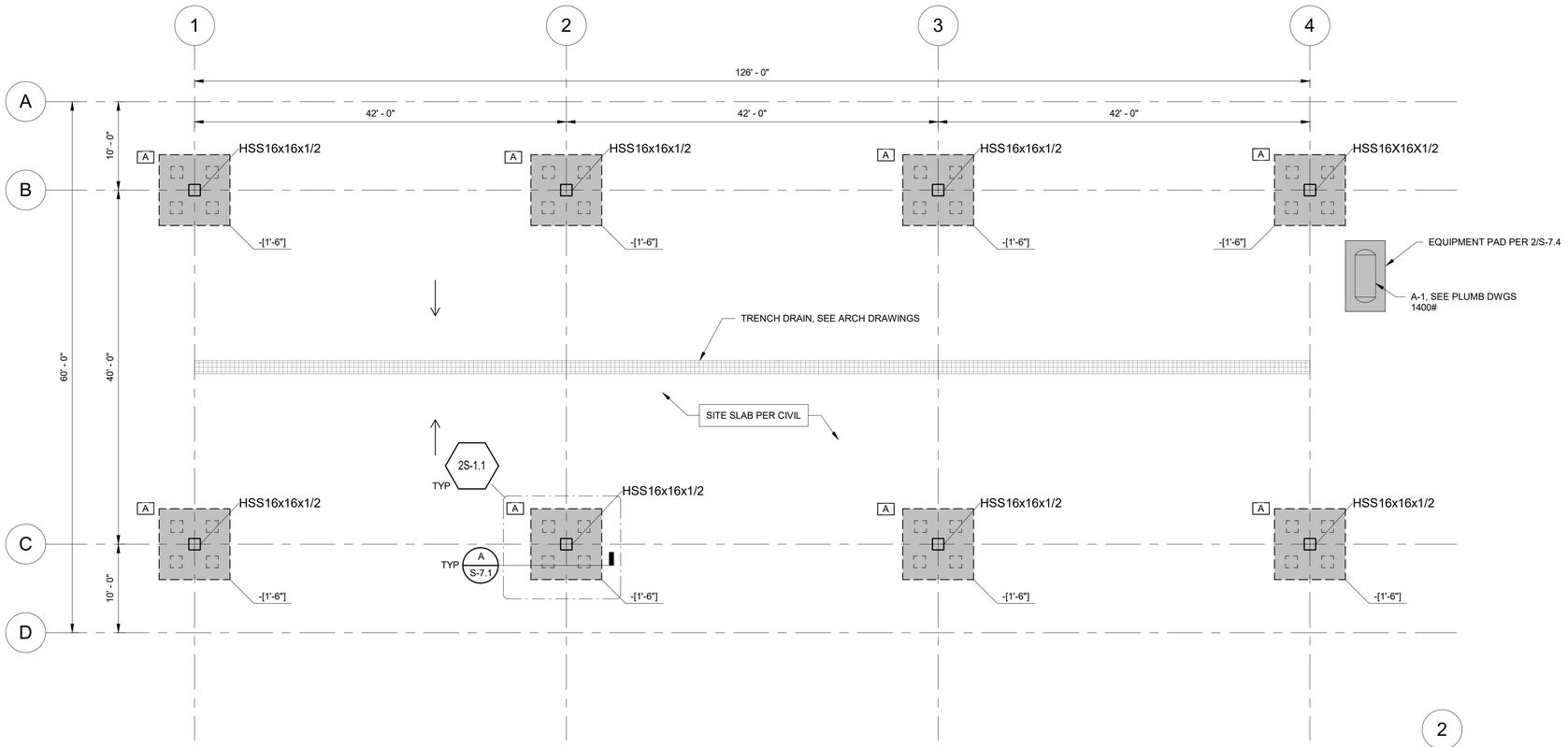

FOUNDATION PLAN NOTES:

1. REFER TO GENERAL NOTES & SPECIFICATIONS ON SHEETS S-0.1-S-0.3.
2. SEE SHEET S-0.4 TO S-0.9 FOR TYPICAL FRAMING DETAILS.
3. SITE SLAB IS SLOPED PER CIVIL & ARCH DRAWINGS. SEE CIVIL DRAWINGS FOR SITE SLAB ELEVATIONS. TOP OF SLAB REFERENCE ELEVATION = 24.20' = +[0' - 0"] TYP, U.N.O.
4. FOR DETAILED SOILS INFORMATION AND COMPLETE REQUIREMENTS, REFER TO SOILS REPORT.
5. SEE CIVIL DRAWINGS FOR BUILDING PAD PREPARATION, INCLUDING OVER EXCAVATION AND FILL REQUIREMENTS PER THE SOILS REPORT FOR DETAILED SOILS INFORMATION AND COMPLETE REQUIREMENTS, REFER TO SOILS REPORT.
6. CONTRACTOR TO VERIFY ALL DIMENSIONS AND ELEVATIONS SHOWN WITH ARCHITECTURAL DRAWINGS AND INFORM BOTH ARCHITECT AND ENGINEER OF ANY CONFLICTING INFORMATION.
7. CONTRACTOR SHALL FIELD VERIFY ALL EXISTING SIZES, CONDITIONS, MEMBER ELEVATIONS AND DIMENSIONS BEFORE BEGINNING CONSTRUCTION AND/OR ORDERING MATERIALS. ANY CONDITIONS ENCOUNTERED IN THE FIELD THAT CONFLICT WITH THESE PLANS SHALL BE BROUGHT TO THE ATTENTION OF THE ENGINEER IMMEDIATELY.
8. THE SIZE & LOCATION OF ALL FOOTING AND SLAB PENETRATIONS SHALL BE SUBMITTED TO THE ENGINEER FOR REVIEW PRIOR TO INSTALLATION.
9. CONCRETE CONTRACTOR IS RESPONSIBLE FOR THE PLACEMENT OF ALL EMBEDDED ITEMS.
10. ANCHOR BOLTS AND BASE PLATES SHALL NOT BE WET SET.
11. ALL DIMENSIONS ARE TO CENTERLINE OF COLUMNS OR FACE OF CONCRETE, TYPICAL UNLESS NOTED OTHERWISE.
12. SEE ARCHITECTURAL DRAWINGS FOR CURB LOCATIONS.
13. ALL DIMENSIONS ARE TO CENTERLINE OF COLUMNS OR FACE OF MASONRY, TYPICAL UNLESS NOTED OTHERWISE.

1S-1.1 / S-1.1 **FOUNDATION PLAN**
SCALE: 1/8" = 1'-0"

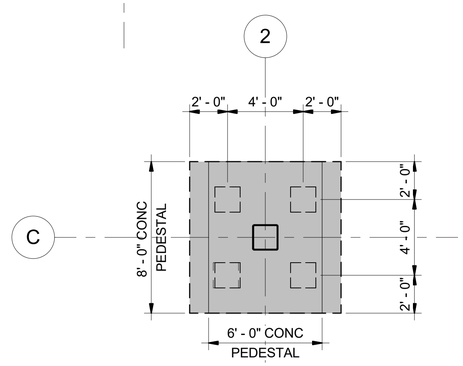

2S-1.1 / S-1.1 **TYPICAL PILE CAP**
SCALE: 1/4" = 1'-0"

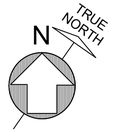

LEGEND:

1. 1 / A101 — INDICATES DETAIL/SECTION VIEW WITH VIEW DIRECTION ARROW, DETAIL NUMBER AND SHEET REFERENCE.
2. 1 — INDICATES GRID
3. INDICATES FOOTING
4. A — INDICATES FOUNDATION TAG. SEE SCHEDULE.
5. INDICATES 16" SQ PRECAST PILES. SEE 1 / S-7.3 FOR PILE DETAILS.
6. -[1'-0"] — INDICATES TOP OF FOOTING ELEVATION. TYPICAL ELEVATION SHALL BE 1'-0" BELOW FINISH FLOOR, U.N.O..

FOOTING SCHEDULE				
TYPE	SIZE	PILE CAP REINFORCING		REMARKS
		LONG.	TRANS.	
A	8'-0" x 8'-0" x 3'-0"	8 - #7	8 - #7	1, 2

NOTES:
1. RUN CONTINUOUS STEEL THROUGH FOOTING.
2. REINFORCING INDICATES TOP AND BOTTOM MAT.

GENERAL NOTES:

NO.	DATE	DRAWN	REVISIONS -
A	3/20/25	-	30 % CONCEPT DESIGN
B	4/25/25	-	FINAL CONCEPT DESIGN
C	7/18/25	-	40 % DESIGN
D	9/19/25	-	80 % DESIGN

NOT FOR CONSTRUCTION

80% DESIGN REVIEW
SEP 19, 2025

Jacobs
2600 MICHELSON DRIVE, SUITE 500
IRVINE, CA 92612
T: (949) 224-7500
F: (949) 224-7501
CORNERSTONE structural engineering group
989 W. Alluvial, Suite 201
Fresno, California 93711
559.320.3200

REGISTERED PROFESSIONAL ENGINEER — DUSTIN G. LEE — No. S6623 — EXP. 3/31/27 — STATE OF CALIFORNIA — STRUCTURAL

SCALE:	AS SHOWN
DRAWN:	M.REISZ
CHECKED:	D.LEE
DESIGNED:	D.ANDERSON
	ENGINEER / ARCHITECT

TERMINAL ISLAND MARITIME SUPPORT FACILITY

CANOPY FOUNDATION PLAN

THE PORT OF LOS ANGELES
ENGINEERING DIVISION
425 S. PALOS VERDES STREET SAN PEDRO CA 90731-3309

DRAWING NUMBER: 1-3513
SHEET NUMBER: S-1.1

RVT: \\corp.lh.tld\rf\utfnet$\P\Home\dlee\1-3513-JEC\1-13_Roadability Canopy_R25_dlee@corp.com.rvt
DATE: 9/19/2025 4:10:58 PM

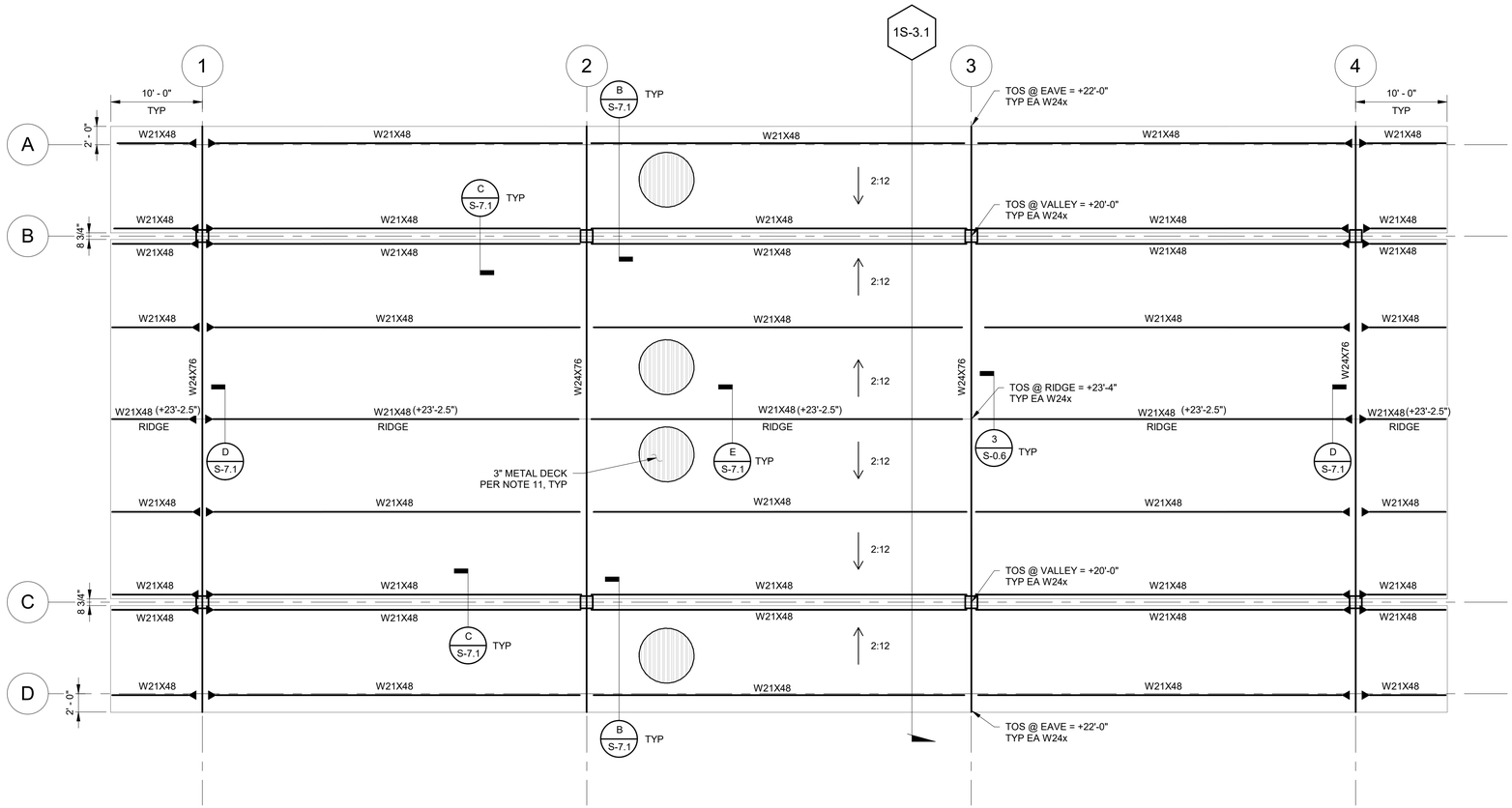

3S-1.2 / S-1.2 ROOF FRAMING PLAN

SCALE: 1/8" = 1'-0"

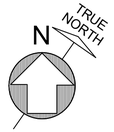

ROOF FRAMING NOTES:

1. REFER TO GENERAL NOTES & SPECIFICATIONS ON SHEET S-0.1-S-0.3.
2. SEE SHEET S-0.4 TO S-0.9 FOR TYPICAL FRAMING DETAILS.
3. SEE ARCHITECTURAL DRAWINGS FOR ROOF ELEVATIONS.
4. CONTRACTOR TO VERIFY ALL DIMENSIONS & ELEVATIONS SHOWN WITH ARCHITECTURAL DRAWINGS AND INFORM ARCHITECT & STRUCTURAL ENGINEER OF ANY DISCREPANCY.
5. CONTRACTOR SHALL FIELD VERIFY ALL EXISTING SIZES, CONDITIONS, MEMBER ELEVATIONS AND DIMENSIONS BEFORE BEGINNING CONSTRUCTION AND/OR ORDERING MATERIALS. ANY CONDITIONS ENCOUNTERED IN THE FIELD THAT CONFLICT WITH THESE PLANS SHALL BE BROUGHT TO THE ATTENTION OF THE ENGINEER IMMEDIATELY.
6. SEE ARCHITECTURAL DRAWINGS FOR SIZE & LOCATION OF DECK PENETRATIONS.
7. VERIFY SIZE AND LOCATION OF ALL OPENINGS WITH ARCHITECTURAL DRAWINGS AND MECHANICAL DRAWINGS. NOTIFY STRUCTURAL ENGINEER IMMEDIATELY OF ANY DISCREPANCIES TYP, U.N.O.
8. NO MECHANICAL EQUIPMENT, DUCTWORK, PIPING, ETC SHALL BE HUNG FROM STEEL DECKING UNLESS APPROVED BY THE STRUCTURAL ENGINEER.
9. THE SIZE, LOCATIONS AND ORIENTATIONS OF ALL MECHANICAL UNITS, CURBS, SLEEPERS AND OPENINGS SHALL BE VERIFIED WITH THE UNIT SUPPLIERS. ANY CONFLICTS SHALL BE BROUGHT TO THE ATTENTION OF THE ENGINEER IMMEDIATELY.
10. SEE ARCHITECTURAL DRAWINGS FOR EDGE OF DECK LOCATIONS.
11. METAL DECK SHALL BE 18 GAUGE VERCO PLN3-32 PER S-0.7.
12. TOP OF STEEL ELEVATION = BOTTOM OF METAL DECK ELEVATION, TYP UNO.

LEGEND:

1. 1 / A101 — INDICATES DETAIL/SECTION VIEW WITH VIEW DIRECTION ARROW, DETAIL NUMBER AND SHEET REFERENCE.
2. 1 — INDICATES GRID
3. INDICATES ROOF SLOPE PER PLAN
4. INDICATES CANTILEVER MOMENT CONNECTION
5. INDICATES STEEL DECK AND ORIENTATION AND TYPE PER 1 / S-0.7

GENERAL NOTES:

NO.	DATE	DRAWN	REVISIONS -
A	3/20/25	-	30 % CONCEPT DESIGN
B	4/25/25	-	FINAL CONCEPT DESIGN
C	7/18/25	-	40 % DESIGN
D	9/19/25	-	80 % DESIGN

NOT FOR CONSTRUCTION

NO.	DATE	DRAWN	REVISIONS -

80% DESIGN REVIEW SEP 19, 2025

Jacobs
2600 MICHELSON DRIVE, SUITE 500
IRVINE, CA 92612
T: (949) 224-7500
F: (949) 224-7501

CORNERSTONE structural engineering group
999 W. Ativoal, Suite 201
Fresno, California 93711
559.320.3200

REGISTERED PROFESSIONAL ENGINEER — DUSTIN G. LEE — No. S6623 — EXP. 3/31/27 — STRUCTURAL — STATE OF CALIFORNIA

SCALE: AS SHOWN
DRAWN: M.REISZ
CHECKED: D.LEE
DESIGNED: D.ANDERSON
ENGINEER / ARCHITECT

TERMINAL ISLAND MARITIME SUPPORT FACILITY

CANOPY ROOF FRAMING PLAN

THE PORT OF LOS ANGELES
ENGINEERING DIVISION
425 S. PALOS VERDES STREET SAN PEDRO CA 90731-3309

DRAWING NUMBER: 1-3513
SHEET NUMBER: S-1.2

RVT: \\craig-fs\dfs\Home\dfsert\Documents\1-3513-JEC-11-3_Roadability Canopy_R25_dfs@craig.com.rvt
DATE: 9/19/2025 4:10:59 PM

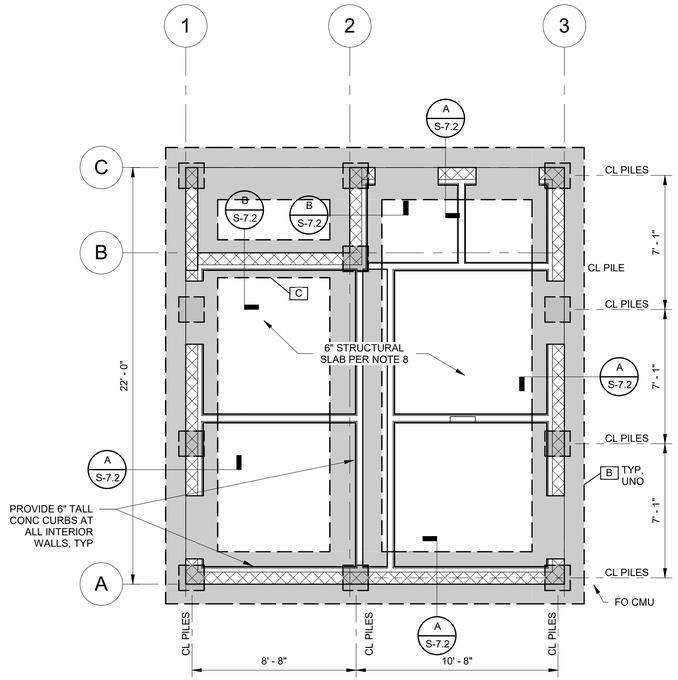

2S-1.3 / S-1.3 FOUNDATION PLAN

SCALE: 1/4" = 1'-0"

FOUNDATION PLAN NOTES:

1. REFER TO GENERAL NOTES & SPECIFICATIONS ON SHEETS S-0.1-S-0.3.
2. SEE SHEET S-0.4 TO S0.9 FOR TYPICAL FRAMING DETAILS.
3. TOP OF SLAB & GROUND FLOOR REFERENCE ELEVATION = +[0' - 0"] TYP, U.N.O.
4. FOR DETAILED SOILS INFORMATION AND COMPLETE REQUIREMENTS, REFER TO SOILS REPORT.
5. SEE CIVIL DRAWINGS FOR BUILDING PAD PREPARATION, INCLUDING OVER EXCAVATION AND FILL REQUIREMENTS PER THE SOILS REPORT FOR DETAILED SOILS INFORMATION AND COMPLETE REQUIREMENTS, REFER TO SOILS REPORT.
6. CONTRACTOR TO VERIFY ALL DIMENSIONS AND ELEVATIONS SHOWN WITH ARCHITECTURAL DRAWINGS AND INFORM BOTH ARCHITECT AND ENGINEER OF ANY CONFLICTING INFORMATION.
7. CONTRACTOR SHALL FIELD VERIFY ALL EXISTING SIZES, CONDITIONS, MEMBER ELEVATIONS AND DIMENSIONS BEFORE BEGINNING CONSTRUCTION AND/OR ORDERING MATERIALS. ANY CONDITIONS ENCOUNTERED IN THE FIELD THAT CONFLICT WITH THESE PLANS SHALL BE BROUGHT TO THE ATTENTION OF THE ENGINEER IMMEDIATELY.
8. STRUCTURAL SLAB SECTION AS FOLLOWS:
   - 6" THICK CONCRETE SLAB AS OCCURS PER PLAN w/ #5 @ 12" OC EACH WAY.
   - SLAB MEMBRANE
   - 6" OF 3/4" CRUSHED ROCK
9. THE SIZE & LOCATION OF ALL FOOTING AND SLAB PENETRATIONS SHALL BE SUBMITTED TO THE ENGINEER FOR REVIEW PRIOR TO INSTALLATION.
10. CONCRETE CONTRACTOR IS RESPONSIBLE FOR THE PLACEMENT OF ALL EMBEDDED ITEMS.
11. ANCHOR BOLTS AND BASE PLATES SHALL NOT BE WET SET.
12. ALL DIMENSIONS ARE TO CENTERLINE OF COLUMNS OR FACE OF CONCRETE, TYPICAL UNLESS NOTED OTHERWISE.
13. SEE ARCHITECTURAL DRAWINGS FOR CURB LOCATIONS.

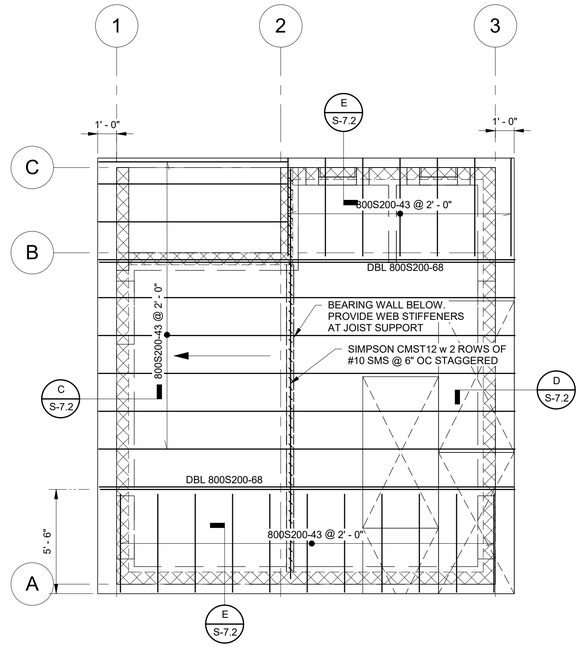

1S-1.3 / S-1.3 ROOF FRAMING PLAN

SCALE: 1/4" = 1'-0"

ROOF FRAMING NOTES:

1. REFER TO GENERAL NOTES & SPECIFICATIONS ON SHEET S-0.1-S-0.3.
2. SEE SHEET S-0.4 TO S0.9 FOR TYPICAL FRAMING DETAILS.
3. SEE ARCHITECTURAL DRAWINGS FOR ROOF ELEVATIONS.
4. CONTRACTOR TO VERIFY ALL DIMENSIONS & ELEVATIONS SHOWN WITH ARCHITECTURAL DRAWINGS AND INFORM ARCHITECT & STRUCTURAL ENGINEER OF ANY DISCREPANCY.
5. CONTRACTOR SHALL FIELD VERIFY ALL EXISTING SIZES, CONDITIONS, MEMBER ELEVATIONS AND DIMENSIONS BEFORE BEGINNING CONSTRUCTION AND/OR ORDERING MATERIALS. ANY CONDITIONS ENCOUNTERED IN THE FIELD THAT CONFLICT WITH THESE PLANS SHALL BE BROUGHT TO THE ATTENTION OF THE ENGINEER IMMEDIATELY.
6. SEE ARCHITECTURAL DRAWINGS FOR SIZE & LOCATION OF DECK PENETRATIONS.
7. VERIFY SIZE AND LOCATION OF ALL OPENINGS WITH ARCHITECTURAL DRAWINGS AND MECHANICAL DRAWINGS. NOTIFY STRUCTURAL ENGINEER IMMEDIATELY OF ANY DISCREPANCIES TYP, U.N.O.
8. NO MECHANICAL EQUIPMENT, DUCTWORK, PIPING, ETC SHALL BE HUNG FROM STEEL DECKING UNLESS APPROVED BY THE STRUCTURAL ENGINEER.
9. THE SIZE, LOCATIONS AND ORIENTATIONS OF ALL MECHANICAL UNITS, CURBS, SLEEPERS AND OPENINGS SHALL BE VERIFIED WITH THE UNIT SUPPLIERS. ANY CONFLICTS SHALL BE BROUGHT TO THE ATTENTION OF THE ENGINEER IMMEDIATELY.
10. SEE ARCHITECTURAL DRAWINGS FOR EDGE OF DECK LOCATIONS.
11. ROOF SHEATHING SHALL CONSIST OF 7/16" CDX PLYWOOD W/ #8 SMS @ 6" O.C. AT BOUNDARIES AND EDGES AND #8 SMS @ 12" O.C. AT FIELD FASTENING. ALL PLYWOOD SHALL BE FULLY BLOCKED W/ FLAT STRAP, U.N.O.. SEE 3/S-0.7 FOR DIAPHRAGM FASTENING & BLOCKING REQUIREMENTS.

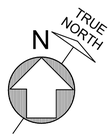

LEGEND:

1. INDICATES DETAIL/SECTION VIEW WITH VIEW DIRECTION ARROW, DETAIL NUMBER AND SHEET REFERENCE. (1 / A101)
2. INDICATES GRID (1)
3. INDICATES FOOTING
4. INDICATES FOUNDATION TAG. SEE SCHEDULE. (A)
5. INDICATES 16" SQ PRECAST PILE. SEE 1 / S-7.3 FOR PILE DETAILS.
6. 1/2" PLYWOOD SHEATHING
7. INDICATES 8" CMU WALL W/ #5 REINFORCEMENT @ 24" O.C. VERT & HORIZ
8. INDICATES ROOF SLOPE PER PLAN
9. -[1' - 0"] INDICATES TOP OF FOOTING ELEVATION BELOW TOP OF SLAB. TOP OF FOOTING SHALL BE 1' - 0" BELOW TOP OF SLAB, UNO

FOOTING SCHEDULE				
TYPE	SIZE	PILE CAP REINFORCING		REMARKS
		LONG.	TRANS.	
B	2'-9" W x 2'-6" D GRADE BEAM	3 - #7	#4 TIES @ 9" OC	1, 2
C	2'-0" W x 2'-6" D GRADE BEAM	3 - #7	#4 TIES @ 9" OC	1, 2

NOTES:
1. RUN CONTINUOUS STEEL THROUGH FOOTING.
2. REINFORCING INDICATES TOP AND BOTTOM MAT.

GENERAL NOTES:

NO.	DATE	DRAWN	REVISIONS -
A	3/20/25	-	30 % CONCEPT DESIGN
B	4/25/25	-	FINAL CONCEPT DESIGN
C	7/18/25	-	40 % DESIGN
D	9/19/25	-	80 % DESIGN

NOT FOR CONSTRUCTION

NO.	DATE	DRAWN	REVISIONS -

80% DESIGN REVIEW
SEP 19, 2025

Jacobs
2920 MICHELSON DRIVE, SUITE 500
IRVINE, CA 92612
T: (949) 224-7500
F: (949) 224-7501

CORNERSTONE structural engineering group
966 W. Alluvial, Suite 201
Fresno, California 93711
559.321.3200

REGISTERED PROFESSIONAL ENGINEER
DUSTIN G. LEE
No. S8623
EXP. 3/31/27
STRUCTURAL
STATE OF CALIFORNIA

SCALE: AS SHOWN
DRAWN: M.REISZ
CHECKED: D.LEE
DESIGNED: D.ANDERSON
ENGINEER / ARCHITECT

TERMINAL ISLAND MARITIME SUPPORT FACILITY

RESTROOM FOUNDATION & ROOF FRAMING PLAN

THE PORT OF LOS ANGELES
ENGINEERING DIVISION
425 S. PALOS VERDES STREET SAN PEDRO CA 90731-3309

DRAWING NUMBER: 1-3513
SHEET NUMBER: S-1.3

RVT: Iosep-fs4d1\Revit\C3P\Home\dave\1-3513-EDG-11-S_Roadability Canopy_R25_dlee@aeg.com.rvt
DATE: 9/19/2025 4:15:58 PM

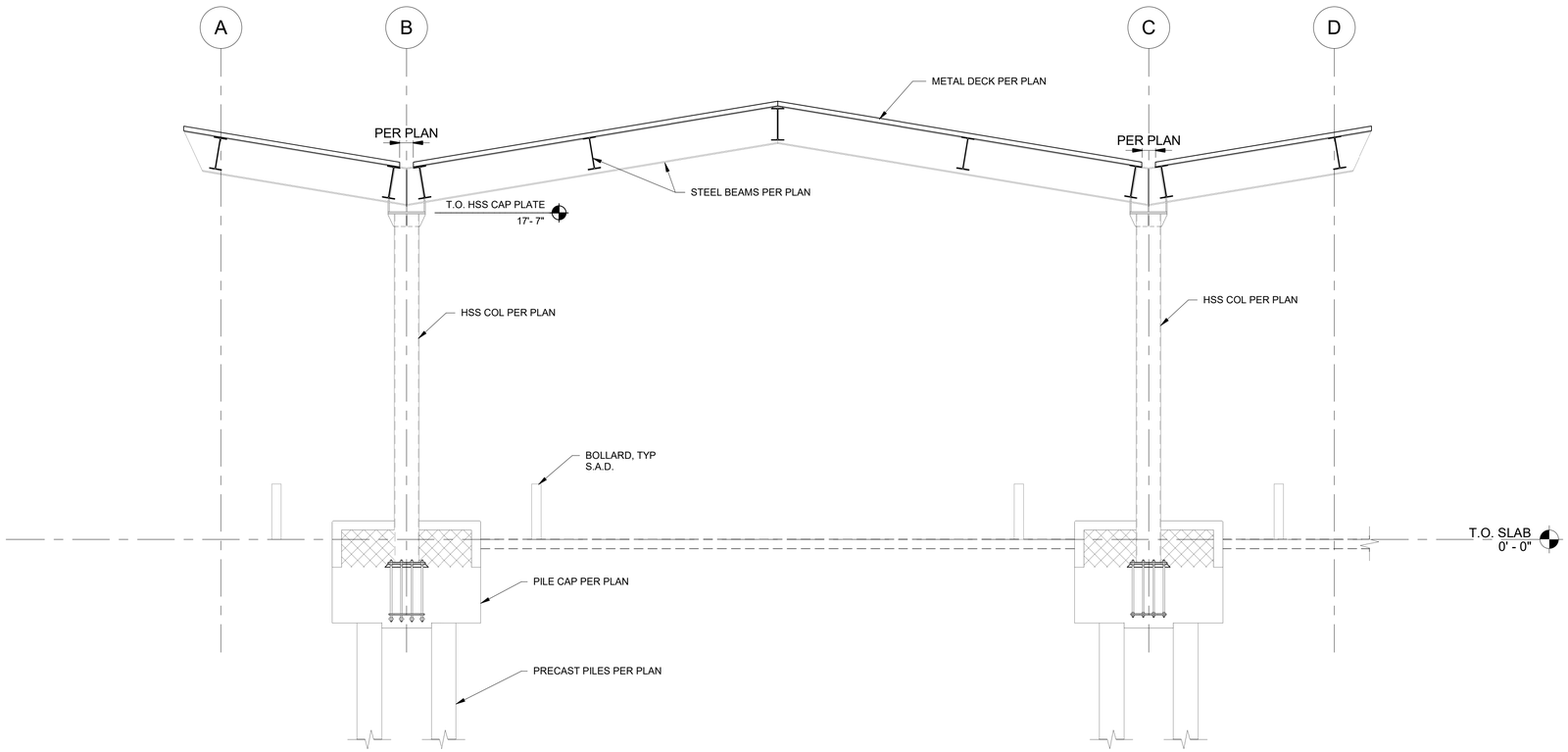

1S-3.1 / S-3.1 CANOPY SECTION

SCALE: 1/4" = 1'-0"

NO.	DATE	DRAWN	REVISIONS -	CHK'D	APP'D
A	3/20/25	-	30 % CONCEPT DESIGN		
B	4/25/25	-	FINAL CONCEPT DESIGN		
C	7/18/25	-	40 % DESIGN		
D	9/19/25	-	80 % DESIGN		

NOT FOR CONSTRUCTION

NO.	DATE	DRAWN	REVISIONS -	CHK'D	APP'D
			80% DESIGN REVIEW SEP 19, 2025		

Jacobs
2920 MICHELSON DRIVE, SUITE 500
IRVINE, CA 92612
T: (949) 224-7500
F: (949) 224-7501

CORNERSTONE structural engineering group
966 W. Alluvial, Suite 201
Fresno, California 93711
559.320.3200

REGISTERED PROFESSIONAL ENGINEER — DUSTIN G. LEE — No. S6623 EXP. 3/31/27 — STRUCTURAL — STATE OF CALIFORNIA

SCALE: AS SHOWN
DRAWN: M.REISZ
CHECKED: D.LEE
DESIGNED: D.ANDERSON
ENGINEER / ARCHITECT

TERMINAL ISLAND MARITIME SUPPORT FACILITY

CANOPY SECTION

THE PORT OF LOS ANGELES
ENGINEERING DIVISION
425 S. PALOS VERDES STREET SAN PEDRO CA 90731-3309

DRAWING NUMBER: 1-3513
SHEET NUMBER: S-3.1

RVT: \\corp.lh.lh\Home$\DPHome\dlee\1-3513-ECI-11-S_Roadability Canopy_R25_.dwg@dwg.com.rvt
DATE: 9/19/2025 4:15:59 PM

K J H G F E D C B A

1 2 3 4 5 6 7 8 9 10 11 12 13 14

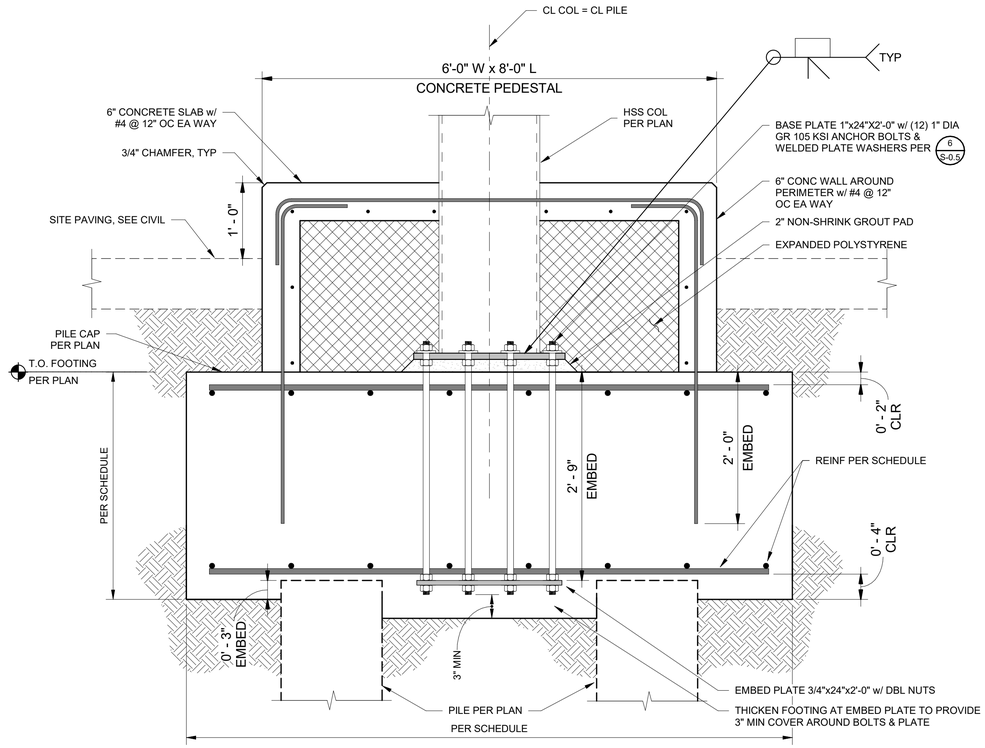

SECTION A S-7.1
1" = 1'-0"

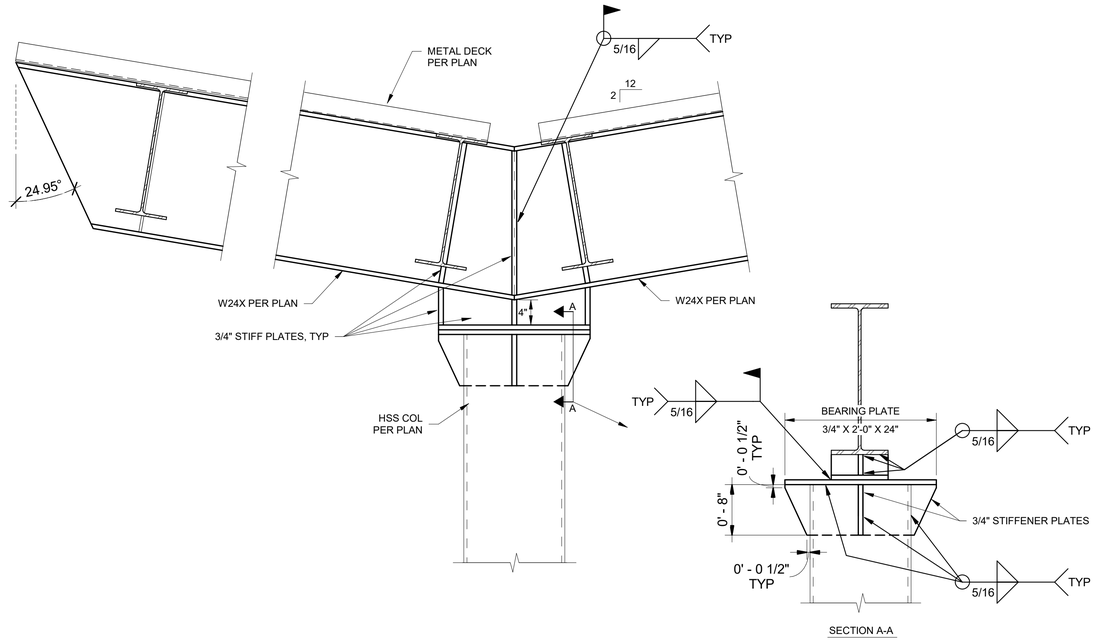

SECTION B S-7.1
1" = 1'-0"

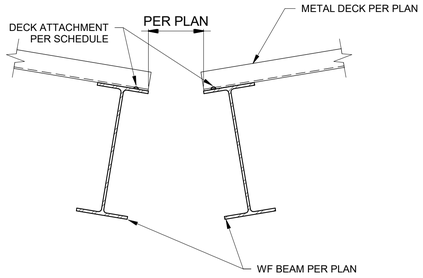

SECTION C S-7.1
1" = 1'-0"

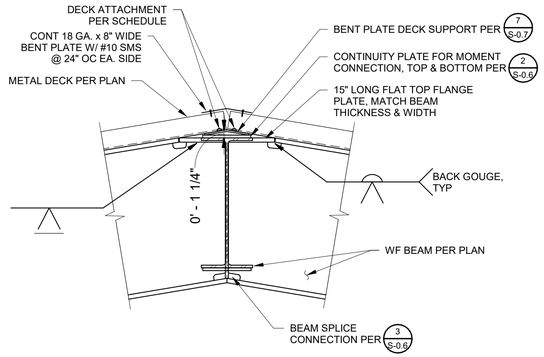

RIDGE BEAM AT END D S-7.1
1" = 1'-0"

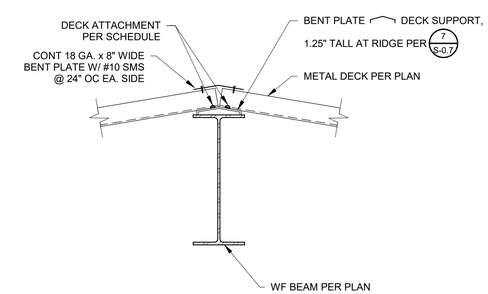

TYPICAL RIDGE BEAM E S-7.1
1" = 1'-0"

NO.	DATE	DRAWN	REVISIONS -	CHK'D	APP'D
A	3/20/25	-	30 % CONCEPT DESIGN		
B	4/25/25	-	FINAL CONCEPT DESIGN		
C	7/18/25	-	40 % DESIGN		
D	9/19/25	-	80 % DESIGN		

NOT FOR CONSTRUCTION

NO.	DATE	DRAWN	REVISIONS -	CHK'D	APP'D

80% DESIGN REVIEW
SEP 19, 2025

Jacobs
2600 MICHELSON DRIVE, SUITE 500
IRVINE, CA 92612
T: (949) 224-7500
F: (949) 224-7501

CORNERSTONE structural engineering group
966 W. Alluvial, Suite 201
Fresno, California 93711
559.323.1200

REGISTERED PROFESSIONAL ENGINEER
DUSTIN G. LEE
No. S6623
EXP. 3/31/27
STRUCTURAL
STATE OF CALIFORNIA

SCALE: AS SHOWN
DRAWN: M.REISZ
CHECKED: D.LEE
DESIGNED: D.ANDERSON
ENGINEER / ARCHITECT

TERMINAL ISLAND MARITIME SUPPORT FACILITY

CANOPY DETAILS

THE PORT OF LOS ANGELES
ENGINEERING DIVISION
425 S. PALOS VERDES STREET SAN PEDRO CA 90731-3309

DRAWING NUMBER 1-3513
SHEET NUMBER S-7.1

RVT: \\cseg-fs-fs01\sfhome\SFHome\dlee\1-3513-JEG-11-S_Roadability Canopy_R25_dlee@cseg.com.rvt
DATE: 9/19/2025 4:11:00 PM

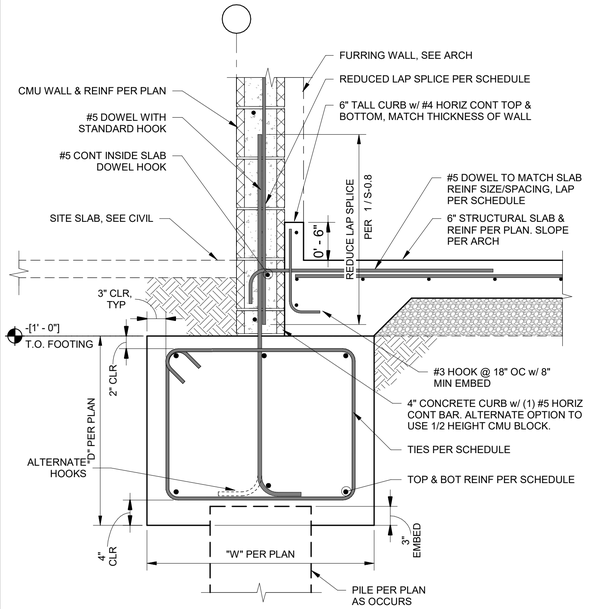

SECTION A / S-7.2
1" = 1'-0"

NOTE: SEE DETAIL A/S-7.2 FOR DETAILS NOT NOTED

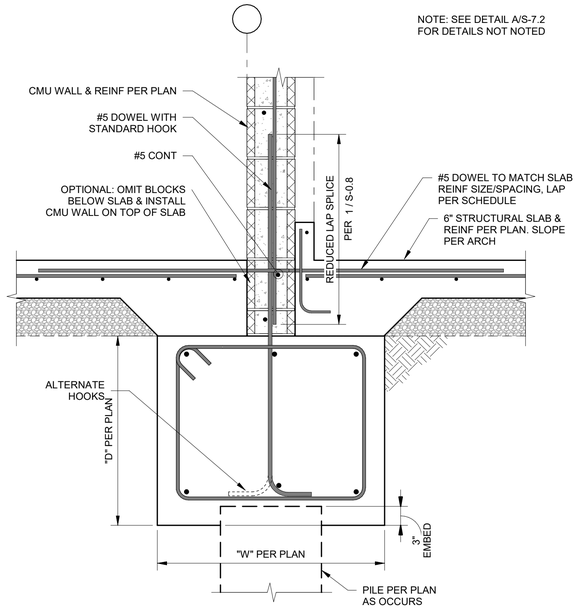

SECTION B / S-7.2
1" = 1'-0"

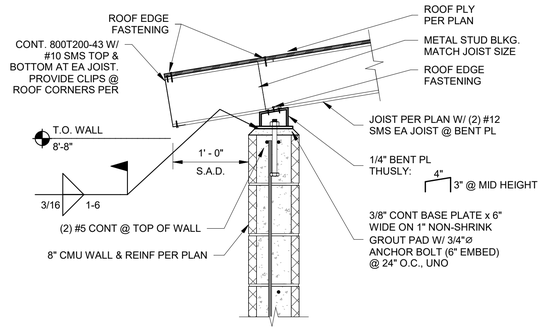

SECTION C / S-7.2
1" = 1'-0"

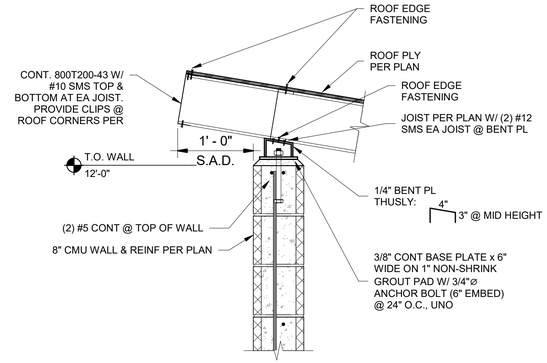

SECTION D / S-7.2
1" = 1'-0"

NOTE: SEE DETAIL C/S-7.2 FOR DETAILS NOT NOTED

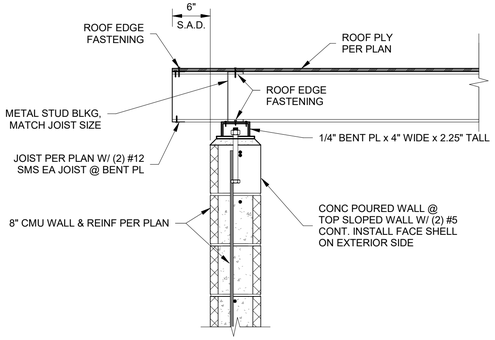

SECTION E / S-7.2
1" = 1'-0"

NO.	DATE	DRAWN	REVISIONS -	CHK'D	APP'D
A	3/20/25	-	30 % CONCEPT DESIGN		
B	4/25/25	-	FINAL CONCEPT DESIGN		
C	7/18/25	-	40 % DESIGN		
D	9/19/25	-	80 % DESIGN		

NOT FOR CONSTRUCTION

NO.	DATE	DRAWN	REVISIONS -	CHK'D	APP'D
			80% DESIGN REVIEW SEP 19, 2025		

Jacobs
2920 MICHELSON DRIVE, SUITE 500
IRVINE, CA 92612
T: (949) 224-7500
F: (949) 224-7501

CORNERSTONE structural engineering group
966 W. Alluvial, Suite 201
Fresno, California 93711
559.320.3200

REGISTERED PROFESSIONAL ENGINEER — DUSTIN G. LEE — No. S6623 EXP. 3/31/27 — STRUCTURAL — STATE OF CALIFORNIA

SCALE:	AS SHOWN
DRAWN:	M.REISZ
CHECKED:	D.LEE
DESIGNED:	D.ANDERSON
	ENGINEER / ARCHITECT

TERMINAL ISLAND MARITIME SUPPORT FACILITY

RESTROOM DETAILS

THE PORT OF LOS ANGELES
ENGINEERING DIVISION
425 S. PALOS VERDES STREET SAN PEDRO CA 90731-3309

DRAWING NUMBER	SHEET NUMBER
1-3513	S-7.2

RVT: \\corp.lnh\rfnmsfc\SPHome\dwh1-3513-ED-11-S_Roadability Canopy_R25_.dwg@swg.com.rvt
DATE: 9/19/2025 4:11:00 PM

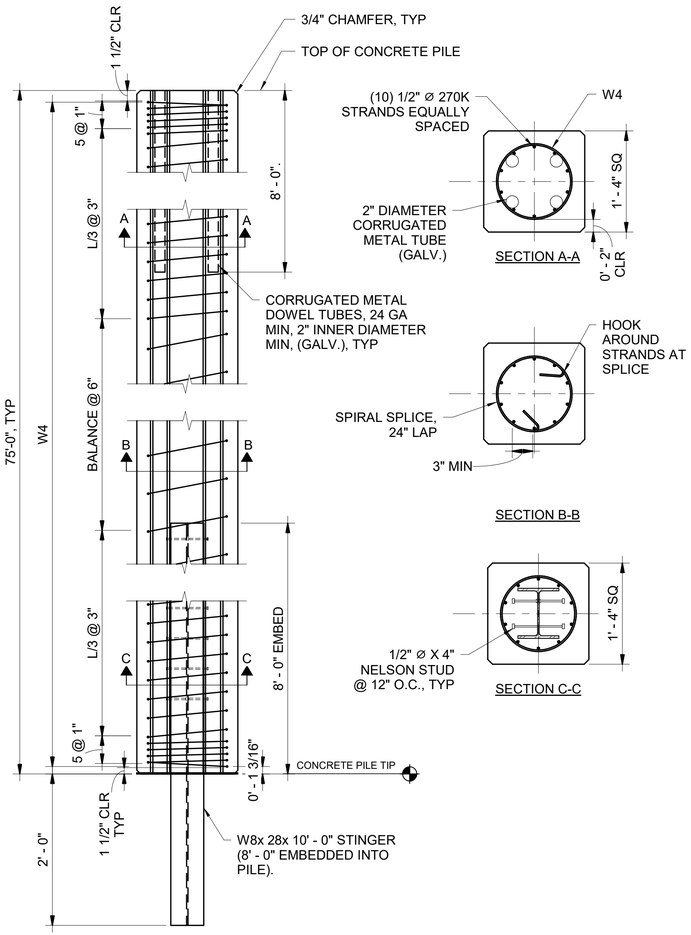

NOTE:

1. CONCRETE
   f'ci = 4500 PSI @ TRANSFER
   f'c = 6500 PSI @ 28 DAYS & TIME OF DRIVING
   w/c = 0.4
2. REINFORCING
   PRESTRESSING STEEL ASTM A416
   LOW-RELAX GRADE 270
   SPIRALS - ASTM A1064 PLAIN WIRE
   REBAR - ASTM A706 GRADE 60
3. EFFECTIVE PROPERTIES
   INITIAL TRANSFER FORCE/STRAND = 28.9 KIPS (70%)
   PRESTRESS LOSS = 30 KSI
   EFFECTIVE PRESTRESS IN STRAND = 159 KSI
   EFFECTIVE PRESTRESS IN CONCRETE = 958 PSI
4. SECTION PROPERTIES
   16" SQ. PILES
   AREA CONCRETE = 255 SQ. IN.
   AREA STRAND = 10 STRANDx0.153 SQ. IN. = 1.530 SQ. IN.
   WEIGHT = 267 POUNDS PER FOOT
5. DESIGN PILE TIP ELEVATIONS.
6. PRESTRESSED CONCRETE PILE SHALL BE DRIVEN TO PILE TIP ELEVATION OR REFUSAL PER SPECIFICATIONS.
7. JETTING FOR PILE INSTALLATION WILL NOT BE ALLOWED.
8. IF PILE IS DRIVEN LESS THAN 6" BELOW CUT-OFF ELEVATION, REMOVE UPPER PART OF PILE UNTIL TOP OF PILE IS 6" BELOW CUT-OFF ELEVATION FOR PILE BUILD-UP.
9. IF NO CORRUGATED METAL TUBING REMAINS AFTER CUT-OFF, DRILL 2" DIAMETER HOLES AND GROUT DOWELS USING NON-SHRINK GROUT. IF A PORTION OF THE CORRUGATED METAL TUBING REMAINS AFTER CUT-OFF , DRILL 2" DIAMETER HOLES. FOR GROUTING DOWELS, DOWEL TUBES SHALL BE FILLED WITHIN 2 FT FROM TOP WITH GROUT MATERIAL. PLACE DOWELS IMMEDIATELY AFTER GROUTING. MINIMUM DOWEL EMBEDMENT LENGTH IS MEASURED FROM TOP OF CUT-OFF. MIN 1 1/2" CLR FROM CORE TO PRESTRESSING STRANDS.
10. SEE (2 / S-7.3) FOR TYPICAL PRECAST DOWEL DETAIL.
11. SEE (3 / S-7.3) FOR PILE BUILD-UP MATERIAL.

TYPICAL 16" SQUARE PRECAST PILE DETAIL — 1 / S-7.3
1" = 1'-0"

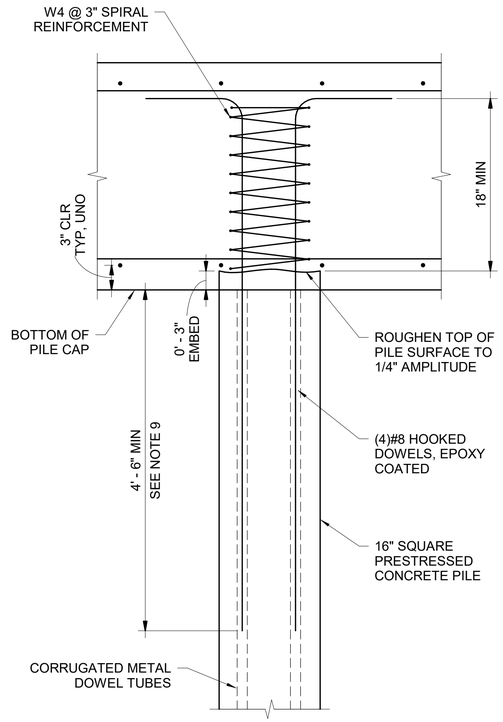

PRECAST DOWEL DETAIL — 2 / S-7.3
1" = 1'-0"

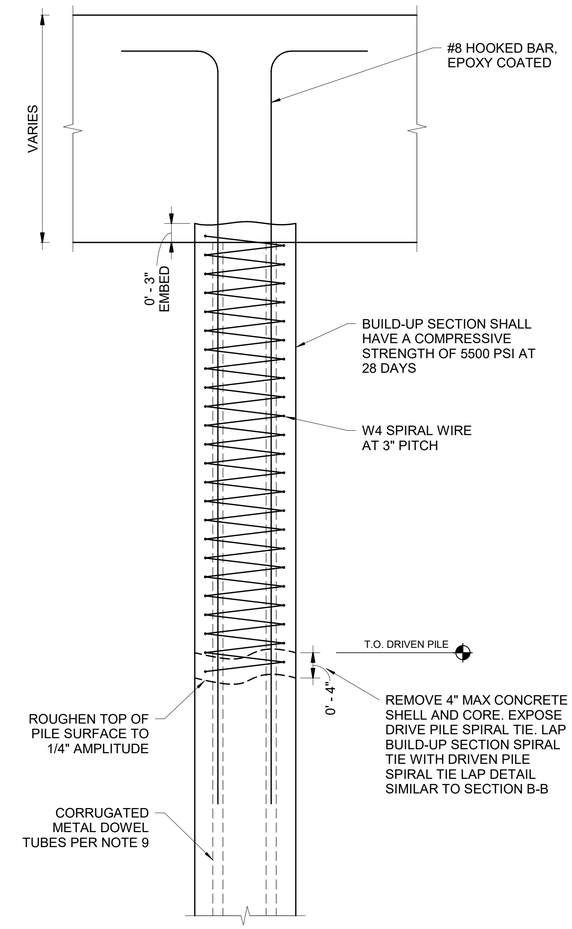

PILE BUILD-UP DETAIL — 3 / S-7.3
1" = 1'-0"

NO.	DATE	DRAWN	REVISIONS -	CHK'D	APP'D
A	3/20/25	-	30 % CONCEPT DESIGN		
B	4/25/25	-	FINAL CONCEPT DESIGN		
C	7/18/25	-	40 % DESIGN		
D	9/19/25	-	80 % DESIGN		

NOT FOR CONSTRUCTION

NO.	DATE	DRAWN	REVISIONS -	CHK'D	APP'D

80% DESIGN REVIEW SEP 19, 2025

Jacobs
2600 MICHELSON DRIVE, SUITE 500
IRVINE, CA 92612
T: (949) 224-7500
F: (949) 224-7501
CORNERSTONE
structural engineering group
3990 W. Ahlvind, Suite 201
Fresno, California 93711
559.320.3200

REGISTERED PROFESSIONAL ENGINEER — DUSTIN G. LEE — No. S6623 — EXP. 3/31/27 — STRUCTURAL — STATE OF CALIFORNIA

SCALE:	AS SHOWN
DRAWN:	M.REISZ
CHECKED:	D.LEE
DESIGNED:	D.ANDERSON
	ENGINEER / ARCHITECT

TERMINAL ISLAND MARITIME SUPPORT FACILITY

PRECAST PILE DETAILS

THE PORT OF LOS ANGELES
ENGINEERING DIVISION
425 S. PALOS VERDES STREET SAN PEDRO CA 90731-3309

DRAWING NUMBER	SHEET NUMBER
1-3513	S-7.3

R:\T... \Lowg-h1401\mfrmed\SP\home\dlee\1-3513-IEC-11-S_Rotatability Canopy_R25_dwg@lowg.com.rvt
DATE: 9/19/2025 4:11:00 PM

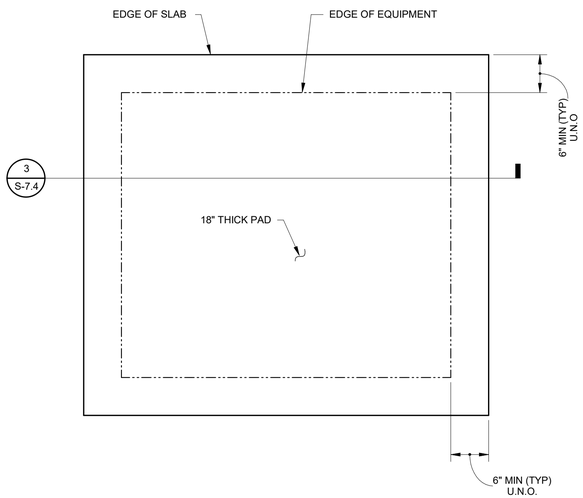

NOTES:

1. ELECTRICAL MAIN SWITCH BOARDS, ASSUMED TO BE LESS THAN 20,000 LBS IN WEIGHT.
2. ANCHORAGE TO BE DESIGNED BY EQUIPMENT MANUFACTURER. DESIGN INFORMATION TO BE SUBMITTED TO ENGINEER FOR APPROVAL PRIOR TO CONSTRUCTION.
3. CONDUITS THROUGH SLAB OF EQUIPMENT SHALL BE COORDINATED BY CONTRACTOR PER SPECIFICATIONS.
4. CONTRACTOR TO COORDINATE SIZE OF FOUNDATION WITH EQUIPMENT MANUFACTURER.
5. PROVIDE 3/4 INCH CHAMFER ALL EDGES.

TYPICAL MAIN SWITCH BOARD FOUNDATION

1" = 1'-0"

1 / S-7.4

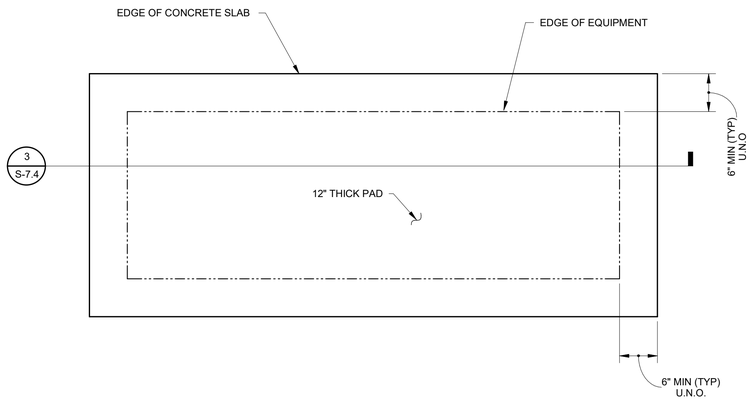

NOTES:

1. ELECTRICAL EQUIPMENT, ASSUMED TO BE LESS THAN 1,500 LBS IN WEIGHT.
2. ANCHORAGE TO BE DESIGNED BY EQUIPMENT MANUFACTURER. DESIGN INFORMATION TO BE SUBMITTED TO ENGINEER FOR APPROVAL PRIOR TO CONSTRUCTION.
3. FOR NUMBER, TYPE, SIZE, ARRANGEMENT AND/OR LOCATION OF EQUIPMENT PADS SEE OTHER DISCIPLINE DRAWINGS. COORDINATE WITH EQUIPMENT SUPPLIER PRIOR TO PLACING SLABS AND FOUNDATION. COORDINATE PIPING OPENINGS WITH OTHER DISCIPLINE DRAWINGS.
4. CONDUITS THROUGH SLAB OF EQUIPMENT SHALL BE COORDINATED BY CONTRACTOR PER SPECIFICATIONS.
5. CONTRACTOR TO COORDINATE SIZE OF FOUNDATION WITH EQUIPMENT MANUFACTURER.
6. PROVIDE 3/4 INCH CHAMFER ALL EDGES.

TYPICAL ELECTRICAL EQUIPMENT FOUNDATION

1" = 1'-0"

2 / S-7.4

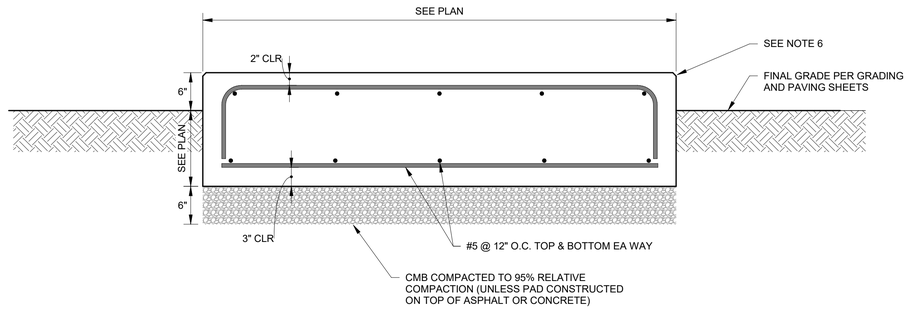

TRANSFORMER FOUNDATION SECTION

1" = 1'-0"

3 / S-7.4

NO.	DATE	DRAWN	REVISIONS -	CHK'D	APP'D
A	3/20/25	-	30 % CONCEPT DESIGN		
B	4/25/25	-	FINAL CONCEPT DESIGN		
C	7/18/25	-	40 % DESIGN		
D	9/19/25	-	80 % DESIGN		

NOT FOR CONSTRUCTION

NO.	DATE	DRAWN	REVISIONS -	CHK'D	APP'D
			80% DESIGN REVIEW SEP 19, 2025		

Jacobs
2920 MICHELSON DRIVE, SUITE 500
IRVINE, CA 92612
T: (949) 224-7500
F: (949) 224-7501

CORNERSTONE structural engineering group
966 W. Alluvial, Suite 201
Fresno, California 93711
559.320.3200

REGISTERED PROFESSIONAL ENGINEER — DUSTIN G. LEE — No. S6623 EXP. 3/31/27 — STRUCTURAL — STATE OF CALIFORNIA

SCALE: AS SHOWN
DRAWN: M.REISZ
CHECKED: D.LEE
DESIGNED: D.ANDERSON
ENGINEER / ARCHITECT

TERMINAL ISLAND MARITIME SUPPORT FACILITY

ELECTRICAL EQUIPMENT FOUNDATIONS

THE PORT OF LOS ANGELES
ENGINEERING DIVISION
425 S. PALOS VERDES STREET SAN PEDRO CA 90731-3309

DRAWING NUMBER: 1-3513
SHEET NUMBER: S-7.4

RVT: \\corp.lh.lh\Home$\DPHome\dlee\1-3513-ECI-11-S_Roadability Canopy_R25_.dwg@swg.com.rvt
DATE: 9/19/2025 4:11:01 PM

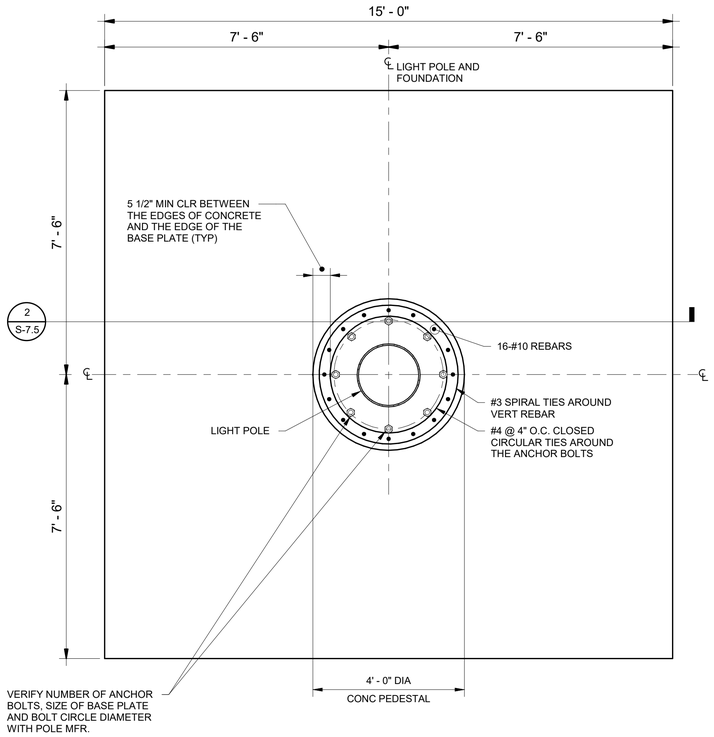

CONCRETE FOUNDATION FOR 100' LIGHT POLE WITH PEDESTAL

1/2" = 1'-0"

1 S-7.5

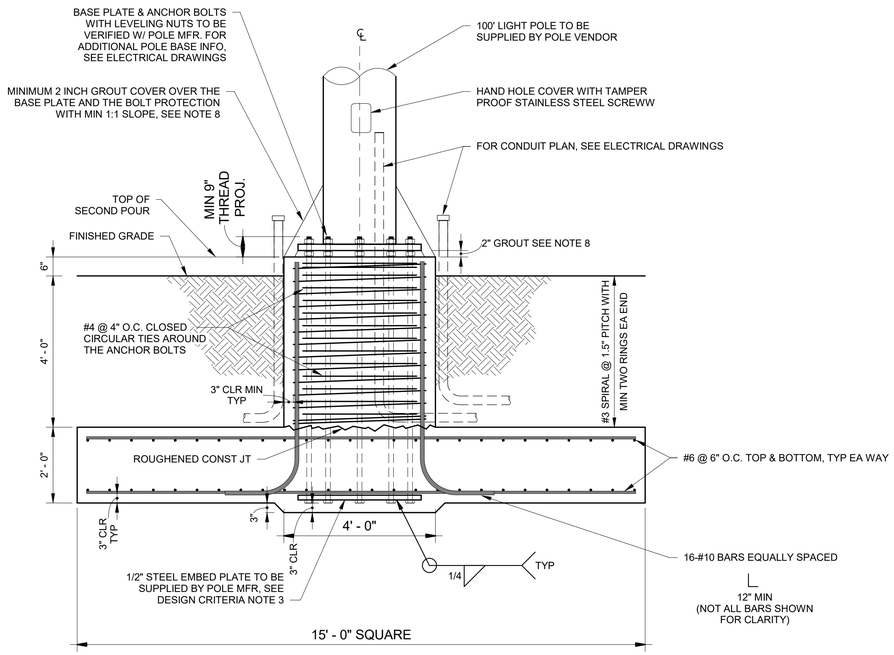

SECTION - CONCRETE FOUNDATION AND PEDESTAL

1/2" = 1'-0"

2 S-7.5

DESIGN CRITERIA

1. THE FOUNDATION SYSTEM AND LIGHT POLE SATISFIES CONDITIONS NOTED BELOW:
   A. WIND LOAD BASED ON AASHTO STD SPECIFICATIONS FOR STRUCTURAL SUPPORTS FOR HIGHWAY SIGNS, LUMINARIES, AND TRAFFIC SIGNALS.
      BASIC WIND SPEED: 85 MPH
      EXPOSURE: TYPE D, OPEN, FLAT TERRAIN, WATER SURFACES
      IMPORTANCE FACTOR: Ir = 1.0
   B. MAX. POLE DEFLECTION INCLUDING DEAD LOAD OF POLE SHALL BE LIMITED TO 16" UNDER 45 MPH WIND LOAD.
   C. MAX. POLE DEFLECTION INCLUDING DEAD LOAD OF POLE SHALL BE LIMITED TO 16" UNDER ZERO MPH WIND LOAD AND THERMAL DEFLECTION.
2. THE EMBED PLATE SHALL BE EXTENDED BELOW THE BOTTOM OF THE BOTTOM LAYER REINF AS SHOWN REGARDLESS OF CONTRACTOR'S DESIGN REQUIREMENT.
3. ANCHOR BOLTS SHALL EXTEND AS SHOWN.
4. REFER TO SPECIFICATION.

NOTES:

1. CONCRETE f'c = 5000 PSI @ 28 DAYS.
2. REBAR: ASTM A615, GRADE 60.
3. PEDESTAL CONCRETE SHALL BE THOROUGHLY VIBRATED. THE FINISH SURFACE SHALL BE PROTECTED IMMEDIATELY AFTER FINISHING WITH AN APPROVED CURING COMPOUND.
4. THE MIN CONCRETE COVER TO SPIRAL OR CLOSED CIRCULAR TIES SHALL BE 3" UNLESS NOTES OTHERWISE.
5. THE CONSTRUCTION SHALL NOT RESTRICT A FIVE-FOOT CLEAR AND UNOBSTRUCTED ACCESS TO ANY WATER OR POWER DISTRIBUTION FACILITIES (POWER POLES, PULL-BOXES, TRANSFORMERS, VAULTS, PUMPS, VALVES, METERS, APPURTENANCES, ETC.) OR TO THE LOCATION OF THE HOOK-UP. THE CONSTRUCTION SHALL NOT BE WITHIN TEN FEET OF ANY POWER LINES-WHETHER OR NOT THE LINES ARE LOCATED ON THE PROPERTY. FAILURE TO COMPLY MAY CAUSE CONSTRUCTION DELAYS.
6. CONTINUOUS INSPECTION BY A DEPUTY INSPECTOR IS REQUIRED FOR ALL CONCRETE DESIGN WITH f'c GREATER THAN 2500 PSI.
7. FOUNDATION DESIGN BASED ON ALLOWABLE SOIL PRESSURE OF 2000 PSF.
8. FIVE STAR FLUID GROUT 100 AS MANUFACTURED BY FIVE STAR PRODUCTS INC. OR APPROVED EQUAL. MIX AND INSTALL GROUT ACCORDING TO MANUFACTURER RECOMMENDATIONS.

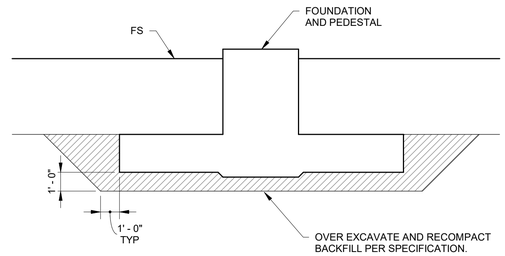

OVER EXCAVATION DIAGRAM

1/4" = 1'-0"

3 S-7.5

NO.	DATE	DRAWN	REVISIONS -	CHK'D	APP'D
A	3/20/25	-	30 % CONCEPT DESIGN		
B	4/25/25	-	FINAL CONCEPT DESIGN		
C	7/18/25	-	40 % DESIGN		
D	9/19/25	-	80 % DESIGN		

NOT FOR CONSTRUCTION

NO.	DATE	DRAWN	REVISIONS -	CHK'D	APP'D

80% DESIGN REVIEW SEP 19, 2025

Jacobs
2920 MICHELSON DRIVE, SUITE 500
IRVINE, CA 92612
T: (949) 224-7500
F: (949) 224-7501

CORNERSTONE structural engineering group
966 W. Alluvial, Suite 201
Fresno, California 93711
559.323.3200

REGISTERED PROFESSIONAL ENGINEER DUSTIN G. LEE No. S8623 EXP. 3/31/27 STRUCTURAL STATE OF CALIFORNIA

SCALE:	AS SHOWN
DRAWN:	M.REISZ
CHECKED:	D.LEE
DESIGNED:	D.ANDERSON
	ENGINEER / ARCHITECT

TERMINAL ISLAND MARITIME SUPPORT FACILITY

100' LIGHT POLE FOUNDATION

THE PORT OF LOS ANGELES
ENGINEERING DIVISION
425 S. PALOS VERDES STREET SAN PEDRO CA 90731-3309

DRAWING NUMBER 1-3513

SHEET NUMBER S-7.5

RVT: \\corp.lh.lh\Home$\DPHome\dwei1-3513-ECI-11-S_Roadability Canopy_R25_.dwg@awg.com.rvt
DATE: 9/19/2025 4:11:01 PM

GENERAL NOTES

1. ALL WORK SHALL COMPLY WITH CALIFORNIA CODE OF REGULATIONS TITLE 24 PART 6 (2022) CALIFORNIA ENERGY CODE, THE LATEST CALIFORNIA MECHANICAL AND BUILDING CODES, 2022 CAL GREEN CODE, ALL OTHER APPLICABLE CODES AND REGULATIONS, AND LOCAL CODES. ALL EQUIPMENT AND SYSTEMS SHALL BE U.L. LISTED.

2. HVAC EQUIPMENT SHALL BE CERTIFIED BY THE CALIFORNIA ENERGY COMMISSION TO COMPLY WITH EFFICIENCY STANDARDS PER TITLE-24, PART 6.

3. CONTRACTOR SHALL CAREFULLY REVIEW THESE PLANS AND SPECIFICATIONS PRIOR TO BID. CONTRACTOR SHALL ADDITIONALLY REVIEW PLANS AND SPECIFICATIONS OF OTHER RELATED TRADES INCLUDING ARCHITECTURAL, STRUCTURAL, ELECTRICAL, FIRE PROTECTION AND PLUMBING PRIOR TO SUBMITTING BID.

4. CONTRACTOR SHALL COORDINATE THEIR INSTALLATION WITH ALL OTHER TRADES PRIOR TO INSTALLATION OF EQUIPMENT OR MATERIALS, INCLUDING BUT NOT LIMITED TO, STRUCTURAL, ARCHITECT, ELECTRICAL, AND PLUMBING.

5. A PRE-BID SITE VISIT IS MANDATORY. THE CONTRACTOR SHALL VISIT THE SITE, VERIFY THE EXACT CONDITIONS RELATING TO THE WORK AND SHALL OBTAIN SUCH INFORMATION AS MAY BE NECESSARY TO PRESENT A CONCLUSIVE BID. NO ALLOWANCE SHALL BE MADE FOR ANY EXTRA EXPENSE, DUE TO FAILURE OF THE CONTRACTOR TO MAKE SUCH A FIELD VERIFICATION. BY SUBMITTING A PROPOSAL FOR THE WORK INCLUDED IN THE CONTRACT, THE CONTRACTOR SHALL BE DEEMED TO HAVE MADE THE FIELD VERIFICATION AND ACCEPTS ALL JOB SITE CONDITIONS.

6. THESE DRAWINGS ARE DIAGRAMMATIC ONLY AND NOT INTENDED TO INDICATE ALL REQUIRED OFFSETS, BENDS, ELBOWS, TRANSITIONS, FITTINGS AS REQUIRED TO CONFORM TO THE BUILDING STRUCTURE, CLEARANCE INSIDE CEILINGS, AVOIDANCE OF OBSTRUCTIONS, AND MAINTAINING HEAD CLEARANCE. THE CONTRACTOR SHALL FOLLOW THE PLANS AS CLOSELY AS POSSIBLE.

7. CONTRACTOR SHALL PROVIDE ALL LABOR, MATERIAL, INSURANCE, EQUIPMENT, INSTALLATION, CONSTRUCTION TOOLS, TRANSPORTATION, ETC. FOR A COMPLETE AND PROPERLY OPERATING MECHANICAL SYSTEM.

8. USE ONLY COMPETENT SKILLED PERSONNEL. PERFORM ALL WORK CONSISTENT WITH THE BEST POSSIBLE TRADE PRACTICES.

9. MATERIALS SHALL BE NEW AND OF THE SAME MANUFACTURER FOR EACH CLASS OR GROUP OF EQUIPMENT. EQUIPMENT SHALL BE LISTED AND APPROVED BY UNDERWRITER'S LABORATORIES, AND SHALL BEAR THE INSPECTION LABEL WHERE SUBJECT TO SUCH APPROVAL. MATERIALS SHALL MEET WITH THE APPROVAL OF THE GOVERNING BODIES HAVING JURISDICTION. MATERIALS SHALL BE MANUFACTURED AND INSTALLED IN ACCORDANCE WITH APPLICABLE STANDARDS ESTABLISHED BY THE LATEST EDITION OF CMC, CBC U.L., SMACNA AND ASHRAE GUIDELINES. INSTALL PER MANUFACTURERS' RECOMMENDATIONS, AND INSTALLATION INSTRUCTIONS.

10. CONTRACTOR SHALL SECURE AND PAY FOR ALL NECESSARY BUILDING PERMITS AND VARIANCES. COORDINATE TEMPORARY CONSTRUCTION REQUIREMENTS WITH ALL TRADES PRIOR TO CONSTRUCTION. INCLUDE ALL COSTS IN THE BID.

11. THE JOB SHALL BE GUARANTEED FOR A PERIOD OF ONE (1) YEAR AFTER DATE OF ACCEPTANCE BY OWNER. ANY WORK, MATERIAL OR EQUIPMENT FOUND TO BE FAULTY DURING THAT PERIOD SHALL BE CORRECTED AT ONCE, UPON WRITTEN NOTIFICATION AT THE EXPENSE OF THE MECHANICAL CONTRACTOR.

12. THE EQUIPMENT AS INSTALLED, INCLUDING ALL EQUIPMENT AND MATERIALS SHALL BE GUARANTEED FOR A PERIOD OF ONE YEAR FROM THE DATE THE INSTALLATION IS ACCEPTED. COMPRESSORS SHALL HAVE A FIVE YEAR GUARANTEE.

13. IF ALTERNATE EQUIPMENT OR MATERIALS ARE PROPOSED BY THE CONTRACTOR, IT SHALL BE THE CONTRACTOR'S RESPONSIBILITY TO OBTAIN ALL BUILDING DEPARTMENT APPROVALS, PAY ALL RELATED FEES AND OBTAIN APPROVAL FROM OWNER & ENGINEER OF RECORD.

14. IF ALTERNATE EQUIPMENT OR SYSTEMS ARE PROPOSED BY THE CONTRACTOR, IT SHALL BE THE CONTRACTOR'S RESPONSIBILITY TO PROVIDE TITLE-24 COMPLIANCE CERTIFICATION AND ALL ASSOCIATED FEES REQUIRED. CONTRACTOR MUST ALSO COORDINATE SUBMITTED EQUIPMENT WITH OTHER TRADES.

15. EQUIPMENT SUBMITTED FOR APPROVAL WITH A DIFFERENT PHYSICAL SIZE OR ARRANGEMENT FROM THAT SHOWN ON THE PLANS SHALL INCLUDE SHOP DRAWINGS. MECHANICAL CONTRACTOR SHALL PROVIDE AND SHOW COORDINATED PLANS WITH ALL OTHER TRADES.

16. PROVIDE SIX COPIES OF ALL MANUFACTURER'S PRODUCT DATA CLEARLY INDICATING MODEL NUMBERS, CAPACITIES, CONSTRUCTION, ELECTRICAL INFORMATION, AND OPTIONAL ACCESSORIES, WITHIN 45 DAYS OF AWARD OF CONTRACT AND PRIOR TO THE START OF WORK. THESE NEED TO BE APPROVED BY ARCHITECT PRIOR TO PURCHASING.

17. ALL BROCHURES, OPERATING MANUALS, CATALOGS, SHOP DRAWINGS, "AS-BUILTS", ETC. SHALL BE TURNED OVER TO THE OWNER AT THE COMPLETION OF THE JOB. PROVIDE THE OWNER WITH ONE (1) SET OF COMPLETE MECHANICAL "AS-BUILTS" INDICATING FINAL EQUIPMENT LOCATIONS, DUCTWORK AND PIPE ROUTING, ETC. MECHANICAL CONTRACTOR SHALL SUBMIT AS-BUILTS IN CAD FORMAT.

18. ADDENDA AND CHANGE ORDERS SHALL BE APPROVED BY OWNER.

19. EQUIPMENT, ACCESSORIES, AND MATERIAL SHALL BE INSTALLED IN STRICT ACCORDANCE WITH THE MANUFACTURER'S INSTALLATION INSTRUCTIONS AND RECOMMENDATIONS.

20. CONTRACTOR SHALL SUBMIT SHOP DRAWINGS FOR ALL MAJOR PIECES OF MECHANICAL EQUIPMENT, INCLUDING, BUT NOT LIMITED TO FAN COILS, CONDENSING UNITS, EXHAUST FANS, DUCTWORK, AND PIPING. SUBMITTALS SHALL BE MADE TO THE ARCHITECT AS SOON AS PRACTICABLE AFTER AWARD OF CONTRACT.

21. CONTRACTOR SHALL ARRANGE AND PAY FOR ALL NECESSARY PERMITS, INSPECTOR'S EXAMINATIONS, AND FEES REQUIRED BY THE AHJ.

22. ANY MATERIAL EXPOSED WITHIN A PLENUM OR DUCT MUST HAVE A FLAME SPREAD INDEX OF NOT MORE THAN 25, AND A SMOKE DEVELOPED RATING OF NOT MORE THAN 50, AND A MOLD/HUMIDITY RESISTANCE PER U.L. 181.

23. EQUIPMENT SHALL BE LOCATED SUCH THAT CODE REQUIRED ACCESS IS MAINTAINED, INCLUDING N.E.C. REQUIREMENTS. ACCESS PANELS WHERE REQUIRED, SHALL BE COORDINATED WITH ARCHITECT, AND PROVIDED BY FACTORY OR BE FIELD-PROVIDED. FOR ATTIC EQUIPMENT, G.C. TO PROVIDE A CATWALK & LIGHT PER CMC FOR ATTIC EQUIPMENT. ALSO COORDINATE REQUIRED ACCESS WITH THE BUILDING ENGINEER.

24. PROVIDE VIBRATION ISOLATION TO ALL ROTATING EQUIPMENT TO PREVENT TRANSMISSION OF VIBRATION TO BUILDING STRUCTURE. PROVIDE FLEXIBLE DUCT OR PIPE CONNECTIONS TO ALL ROTATING EQUIPMENT.

25. AIR MOVING SYSTEMS SUPPLYING AIR IN EXCESS OF 2,000 CUBIC FEET PER MINUTE TO ENCLOSED SPACES IN THIS PROJECT SHALL BE EQUIPPED WITH CODE-REQUIRED DUCT MOUNTED AUTOMATIC SHUTOFF SMOKE DETECTORS. AUTO SHUTOFF SHALL BE ACCOMPLISHED BY INTERRUPTING THE POWER SOURCE OF THE AIR-MOVING EQUIPMENT UPON DETECTION OF SMOKE IN THE MAIN SUPPLY DUCT (OR AREA DETECTORS AT THE AHJ'S APPROVAL). THESE DETECTORS SHALL BE SUPERVISED BY THE BUILDING FIRE ALARM SYSTEM AND THE DETECTORS SHALL ACTIVATE THIS SYSTEM. REFER TO CMC SECTION 609.

26. REFER TO SPECIFICATIONS FOR ADDITIONAL REQUIREMENTS AS THESE ARE PART OF THE CONTRACT DOCUMENTS.

27. WHERE A CONFLICT OCCURS BETWEEN THIS SPECIFICATION AND OTHER SPECIFICATIONS ISSUED AS A PART OF THE CONTRACT DOCUMENTS, THE MORE STRINGENT REQUIREMENT SHALL PREVAIL.

28. AIR FILTERS SHALL BE STATE FIRE MARSHAL APPROVED AND LISTED. PREFORMED FILTERS HAVING COMBUSTIBLE FRAMING SHALL BE TESTED AS A COMPLETE ASSEMBLY. AIR FILTERS IN ALL OCCUPANCIES SHALL BE PER TITLE-24 PART 6 AND APPLICABLE ASHRAE REQUIREMENTS. LOW-RISE RESIDENTIAL (3-STORIES AND BELOW) SHALL COMPLY WITH OUTSIDE AIR INTAKE FILTRATION REQUIREMENTS AS REQUIRED. FILTERS SHALL BE ACCESSIBLE FOR CLEANING OR REPLACEMENT.

29. ALL APPLIANCES DESIGNED TO BE FIXED IN POSITION SHALL BE SECURELY FASTENED IN PLACE PER BUILDING CODE REQUIREMENTS OR APPLICABLE MANUFACTURER INSTALLATION REQUIREMENTS.

30. IT SHALL BE THE TEST AND BALANCE AGENCY'S RESPONSIBILITY TO PERFORM THE REQUIRED TESTING PROCEDURES, COMPLY, FILL-OUT, AND SIGN ALL THE CERTIFICATE OF COMPLIANCE FORMS MECH-1C THROUGH MECH-4C REQUIRED BY THE BUILDING INSPECTOR. HE SHALL COORDINATE AND WORK WITH THE EQUIPMENT AND CONTROLS INSTALLERS TO COMPLY WITH THESE REQUIREMENTS IN A TIMELY MANNER WITHIN THE PROJECT SCHEDULE.

31. IT SHALL BE THE TEST AND BALANCE CONTRACTOR'S RESPONSIBILITY TO PERFORM THE TESTING PROCEDURES, REQUIRED BY THE MECH-2A THROUGH MECH-11A CERTIFICATE OF ACCEPTANCE FORMS, AS APPLICABLE FOR ALL NEWLY INSTALLED HEATING AND COOLING SYSTEMS, AS CHECKED-OFF IN FORM MECH-1C ON THE PLANS. THE TEST AND BALANCE CONTRACTOR IS RESPONSIBLE FOR OBTAINING THE CERTIFICATE OF ACCEPTANCE FORMS REQUIRED BY THE BUILDING INSPECTOR. THE TEST AND BALANCE AGENCY SHALL BE WELL VERSED WITH ALL THE REQUIREMENTS OF THESE CERTIFICATE OF ACCEPTANCE FORMS, AND SHALL COORDINATE AND WORK WITH THE EQUIPMENT AND CONTROLS INSTALLERS TO COMPLY WITH THESE REQUIREMENTS IN A TIMELY MANNER WITHIN THE PROJECT SCHEDULE.

32. ALL WORK COVERED BY THIS DESIGN SHOULD CONFIRM TO LATEST CODE REQUIREMENT, 2022 CBC, CMC, ALONG WITH 2022 T-24 ENERGY STANDARDS.

33. IN MIXED OCCUPANCY BUILDINGS, EACH PORTION OF A BUILDING SHALL COMPLY WITH SPECIFIC GREEN BUILDING MEASURES APPLICABLE TO EACH SPECIFIC OCCUPANCY.

34. COVERING OF NEW DUCT OPENING AND PROTECTION OF MECHANICAL EQUIPMENT DURING CONSTRUCTION. AT THE TIME OF ROUGH INSTALLATION, DURING STORAGE ON THE CONSTRUCTION SITE AND UNTIL FINAL STARTUP OF THE HEATING, COOLING AND VENTILATION EQUIPMENT, ALL DUCT AND OTHER RELATED AIR DISTRIBUTION COMPONENT OPENINGS SHALL BE COVERED WITH TAPE, PLASTIC, SHEET METAL OR OTHER METHODS ACCEPTABLE BY THE AHJ TO REDUCE THE AMOUNT OF WATER, DUST AND DEBRIS, WHICH MAY ENTER THE SYSTEM.

35. ALL HVAC UNITS OR SYSTEMS SERVING A COMMON AIR SPACE MUST BE INTERCONNECTED TO SHUT DOWN IMMEDIATELY UPON ALARM CONDITION FROM DUCT DETECTORS (OR FIRM ALARM SYSTEM WHEN USING AREA SMOKE DETECTORS IN LIEU OF DUCT DETECTORS) WITHOUT INTERFERENCE FROM EMS OR CALIFORNIA STATE FIRE MARSHAL LISTED FOR RELEASING SERVICE.

36. HEATING, VENTILATING, AND AIR-CONDITIONING SYSTEMS SHALL BE BALANCED BY A LICENSED T&B CONTRACTOR IN ACCORDANCE WITH ONE OF THE FOLLOWING METHODS (CMC 314.1):
   - AABC NATIONAL STANDARDS FOR TOTAL SYSTEM BALANCE
   - ACCA MANUAL B
   - ASHRAE 111
   - NEBB PROCEDURAL STANDARDS FOR TESTING ADJUSTING BALANCING OF ENVIRONMENTAL SYSTEMS
   - SMACNA HVAC SYSTEMS TESTING, ADJUSTING AND BALANCING

37. PROVIDE COMPLIANCE WITH SECTION 5.410.4 CALGREEN TESTING AND ADJUSTING. SYSTEMS SERVING ADDITIONS OR ALTERATIONS MUST FOLLOW THESE PROCEDURES FOR FINAL INSPECTION.

38. CONDENSATE PIPING FOR ALL COOLING EQUIPMENT SHALL DRAINED TO FLOOR SINK W/ AIR GAP. CMC 1105.7; CMC 310.1.1

DRAWING NUMBER	TITLE
MECHANICAL	
1-3513 M-01	MECHANCIAL GEN. NOTES, LEGEND AND ABBREV.
1-3513 M-02	MECHANICAL EQUIPMENT SCHEDULE AND DETAILS
1-3513 M-03	MECHANICAL FLOOR / ROOF PLAN - WASHROOM

LEGEND & ABBREVIATIONS

SYMBOL	ABB.	DESCRIPTION	ABB.	DESCRIPTION
	SAD	SUPPLY AIR DUCT	S/S	STAINLESS STEEL
	RAD	RETURN AIR DUCT	AC	AIR CONDITIONING UNIT
	OSA	OUTSIDE AIR	AP	ACCESS PANEL
	EAD	EXHAUST AIR DUCT	B.D.D.	BACK DRAFT DAMPER
	CA	COMBUSTION AIR	CB	CIRCUIT BREAKER
	(L)	LINED DUCTWORK	CFM	CUBIC FEET PER MINUTE
	CD	CEILING DIFFUSER	CONC.	CONCRETE
	RG	RETURN GRILLE	COND.	CONDENSATE
	EG	EXHAUST GRILLE	D.B.	DRY BULB
	TG	TRANSFER GRILLE	DN.	DOWN
	SWS	SIDEWALL SUPPLY REGISTER	ENT.	ENTERING
	SWG	SIDEWALL RETURN GRILL	EF	EXHAUST FAN
	SWR	SIDEWALL EXHAUST REGISTER	E.S.P.	EXTERNAL STATIC PRESSURE
	FC	FLEXIBLE CONNECTION	TYP.	TYPICAL
	MVD	MANUAL VOLUME DAMPER	A.F.F	ABOVE FINISHED FLOOR
	QBD	QUADRANT BALANCING DAMPER	FLA.	FULL LOAD AMPS
	OBD	OPPOSED BALANCING DAMPER	FT.	FEET
DL	DL	DOOR LOUVER	GC	GENERAL CONTRACTOR
UC	UC	UNDERCUT DOOR	HP	HORSEPOWER
(T)	T'STAT	ROOM THERMOSTAT	BHP	BRAKE HORSEPOWER
(C)	CO2	CARBON DIOXIDE SENSOR	IN.	INCHES
	VFD	VARIABLE FREQUENCY DRIVE	KW	KILOWATTS
	S.A.	SUPPLY AIR	L.R.A.	LOCKED ROTOR AMPS
	R.A.	RETURN AIR	M.C.A.	MINIMUM CIRCUIT AMPS
	E.A.	EXHAUST AIR	R.L.A.	RATED LOAD AMPS
	T.A.	TRANSFER AIR	M.O.C.P.	MAX. OVER CURRENT PROTEC. AMPS
	O.S.A.	OUTSIDE AIR	PH	PHASE
	TYP.	TYPICAL	FD	FUSED DISCONNECT
SF	SFD	COMBINATION SMOKE-FIRE DAMPER	NFD	NON-FUSED DISCONNECT
M	MBD	MOTORIZED BACKDRAFT DAMPER	PRESS.	PRESSURE
	HVAC	HEATING, VENTILATION, AND AIR CONDITIONING	RPM	REVOLUTIONS PER MINUTE
	VAV	VARIABLE AIR VOLUME FLOW	MIN.	MINIMUM
	CAV	CONSTANT AIR VOLUME FLOW	B.O.D.	BOTTOM OF SHEET METAL DUCT
	DCV	DEMAND CONTROL VENTILATION	A.F.F.	ABOVE FINISHED FLOOR
	ECM	ELECTRONICALLY COMMUTATED MOTOR	UTR	UP THRU ROOF
	CHKV	CHECK VALVE	DTR	DOWN THRU ROOF
	BV	BALANCING VALVE		
	GC	GAS COCK		
	TP	TRAP PRIMER		
(E) CD	(E) CD	EXISTING CONDENSATE DRAIN		

NO.	DATE	DRAWN	REVISIONS -	CHK'D	APP'D
A	3/20/25	-	30 % CONCEPT DESIGN		
B	4/25/25	-	FINAL CONCEPT DESIGN		
C	7/18/25	-	40 % DESIGN		
D	9/05/25		80% DESIGN		

NOT FOR CONSTRUCTION

80% DESIGN REVIEW
SEP 19, 2025

Jacobs
2600 MICHELSON DRIVE, SUITE 500
IRVINE, CA 92612
T: (949) 224-7500
F: (949) 224-7501

IDS GROUP
1 PETERS CANYON ROAD, SUITE 130
IRVINE, CA 92606
TEL: 949-387-8500, FAX: 949-387-0800

REGISTERED PROFESSIONAL ENGINEER
DARREN B. SMITH
No. 30841
Exp. 12/31/26
MECHANICAL
STATE OF CALIFORNIA

SCALE: AS SHOWN
DRAWN: S. SHAHZAD
CHECKED: D. SMITH
DESIGNED: D. SMITH
ENGINEER / ARCHITECT

TERMINAL ISLAND MARITIME SUPPORT FACILITY

MECHANCIAL GEN. NOTES, LEGEND AND ABBREV.

THE PORT OF LOS ANGELES
ENGINEERING DIVISION
425 S. PALOS VERDES STREET SAN PEDRO CA 90731-3309

DRAWING NUMBER: 1-3513
SHEET NUMBER: M-01

RVT: Autodesk Docs://US CA_D3371901_POLA TIMSF/1-3513-JEG-11-M_WashRoom_R25.rvt
DATE: 9/3/2025 5:15:44 PM

FAN SCHEDULE

TAG	MAKE	MODEL	TYPE	DRIVE	LOCATION	SERVICE	PERFORMANCE				ELECTRICAL				WEIGHT (LBS)	MOUNTING DETAIL	REMARKS
							CFM	SP " WG	RPM	SONES	MOTOR WATTS	V	PH	HZ			
EF 1	GREENHECK	SP-AP0511WL	CEILING MOUNT	DIRECT	CEILING	UNISEX RESTROOM 101	110	0.3	1004	1.5	19	115	1	60	20		1 2 3 4 5 6 7
EF 2	GREENHECK	SP-AP0511WL	CEILING MOUNT	DIRECT	CEILING	UNISEX RESTROOM 102	110	0.3	1004	1.5	19	115	1	60	20		1 2 3 4 5 6 7
EF 3	GREENHECK	SP-AP0511WL	CEILING MOUNT	DIRECT	CEILING	UNISEX RESTROOM 103	110	0.3	1004	1.5	19	115	1	60	20		1 2 3 4 5 6 7
EF 4	GREENHECK	SP-AP0511WL	CEILING MOUNT	DIRECT	CEILING	UNISEX RESTROOM 104	110	0.3	1004	1.5	19	115	1	60	20		1 2 3 4 5 6 7
EF 5	GREENHECK	SP-AP0511WL	CEILING MOUNT	DIRECT	CEILING	JANITOR 109	50	0.25	829	0.7	9	115	1	60	20		1 2 3 4 5 6 7

REMARKS:

1. FURNISH WITH ELECTRONICALLY COMMUTATED MOTOR (ECM), FACTORY GRILLE, BACKDRAFT DAMPER, MOUNTING BRACKETS, PLUG TYPE DISCONNECT SWITCH.
2. LIGHTED GRILLE
3. WALL MOUNTED MOTION DETECTOR WITH ADJUSTABLE TIME DELAY SHUT OFF
4. LED, 10W WITH FROSTED LENS, 750 LUMENS
5. MODEL GPI ROOF CAP, CURB MOUNTED, BIRD SCREEN
6. ROUND DUCT CONNECTION 6 INCH UNIVERSAL DUCT CONNECTOR
7. POLYPROPYLENE WHEEL MATERIAL

NO.	DATE	DRAWN	REVISIONS -	CHK'D	APP'D
A	3/20/25	-	30 % CONCEPT DESIGN		
B	4/25/25	-	FINAL CONCEPT DESIGN		
C	7/18/25	-	40 % DESIGN		
D	9/05/25		80% DESIGN		

NOT FOR CONSTRUCTION

NO.	DATE	DRAWN	REVISIONS -	CHK'D	APP'D
			80% DESIGN REVIEW SEP 19, 2025		

Jacobs
2920 MICHELSON DRIVE, SUITE 500
IRVINE, CA 92612
T: (949) 224-7500
F: (949) 224-7501

IDS
IDS GROUP
1 PETERS CANYON ROAD, SUITE 100
IRVINE, CA 92606
TEL: 949.857.9000 FAX: 949.857.9001

REGISTERED PROFESSIONAL ENGINEER
DARREN B. SMITH
No. 30841
Exp. 12/31/26
MECHANICAL
STATE OF CALIFORNIA

SCALE:	AS SHOWN
DRAWN:	S. SHAHZAD
CHECKED:	D. SMITH
DESIGNED:	D. SMITH

ENGINEER / ARCHITECT

TERMINAL ISLAND MARITIME SUPPORT FACILITY

MECHANICAL EQUIPMENT SCHEDULE AND DETAILS

THE PORT OF LOS ANGELES
ENGINEERING DIVISION
425 S. PALOS VERDES STREET SAN PEDRO CA 90731-3309

DRAWING NUMBER: 1-3513
SHEET NUMBER: M-02

RVT: Autodesk Docs://US CA_DSTP361_PDLA TIMSF1-3513-JEG-1114_VisitorRoom_R23.rvt
DATE: 9/3/2025 5:15:04 PM

KEYNOTES:

1. 6"ø EXHAUST DUCT UP THROUGH ROOF TO ROOF CAP.
2. MIN. 12"x 6" DOOR LOUVER.
3. 6"ø EXHAUST DUCT DOWN THROUGH ROOF.

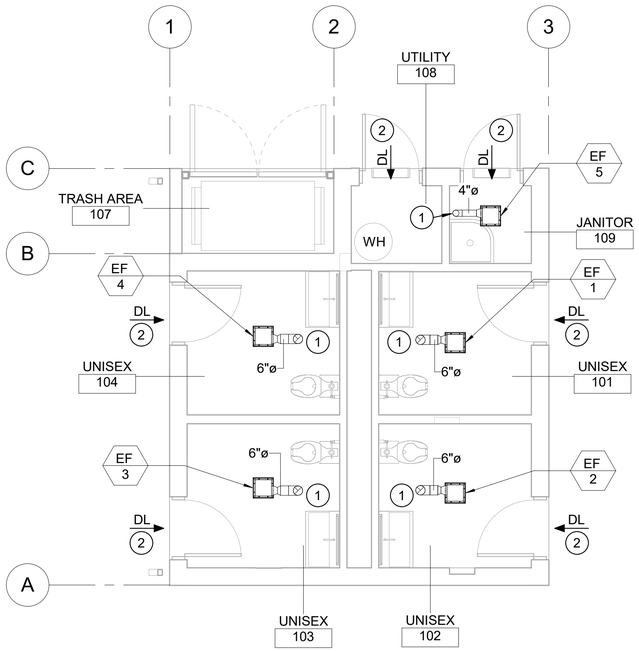

1M-03 / M-03 MECHANICAL FLOOR PLAN

SCALE: 1/4" = 1'-0"

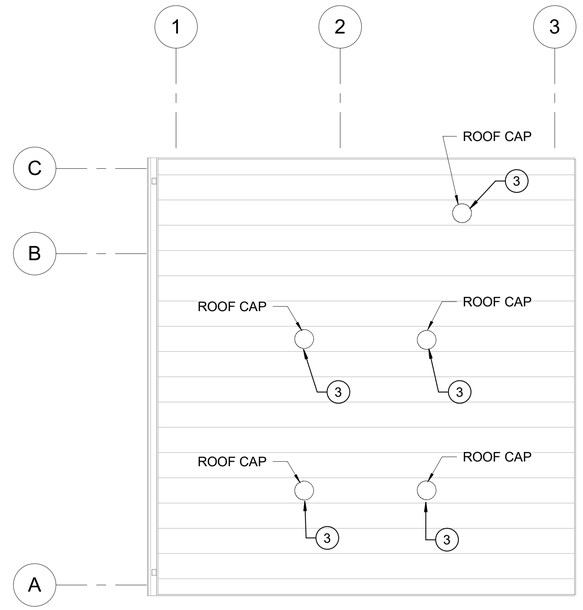

2M-03 / M-03 MECHANICAL ROOF PLAN

SCALE: 1/4" = 1'-0"

N

NO.	DATE	DRAWN	REVISIONS -	CHK'D	APP'D
A	3/20/25	-	30 % CONCEPT DESIGN		
B	4/25/25	-	FINAL CONCEPT DESIGN		
C	7/18/25	-	40 % DESIGN		
D	9/05/25		80% DESIGN		

NOT FOR CONSTRUCTION

NO.	DATE	DRAWN	REVISIONS -	CHK'D	APP'D

80% DESIGN REVIEW
SEP 19, 2025

Jacobs
2600 MICHELSON DRIVE, SUITE 500
IRVINE, CA 92612
T: (949) 224-7500
F: (949) 224-7501

IDS
IDS GROUP
1 PETERS CANYON ROAD, SUITE 130
IRVINE, CA 92606
TEL: 949.851.6300 FAX: 949.387.1884

DARREN B. SMITH
No. 30841
Exp. 12/31/26
MECHANICAL
STATE OF CALIFORNIA

SCALE:	AS SHOWN
DRAWN:	S. SHAHZAD
CHECKED:	D. SMITH
DESIGNED:	D. SMITH

ENGINEER / ARCHITECT

TERMINAL ISLAND MARITIME SUPPORT FACILITY

MECHANICAL FLOOR / ROOF PLAN - WASHROOM

THE PORT OF LOS ANGELES
ENGINEERING DIVISION
425 S. PALOS VERDES STREET SAN PEDRO CA 90731-3309

DRAWING NUMBER: 1-3513

SHEET NUMBER: M-03

RVT: S:\PROJECTS\2025\Shared\230064.01 Jacobs - POLA Terminal Island Marine Support Facility\04 BIM\04 Mech\1-3513-JEG-11-M_WashRoom_R25.rvt
DATE: 9/5/2025 3:53:47 PM

ELECTRICAL SYMBOL LIST

LIGHTING

- LINEAR LED FIXTURE RECESSED MOUNT
- LINEAR LED FIXTURE SUSPENDED OR PENDANT
- LED WALL MOUNT FIXTURE
- LINEAR LED STRIP FIXTURE
- LED DOWNLIGHT RECESSED OR SURFACE
- PENDANT FIXTURE
- LED WALL MOUNTED LIGHT FIXTURE
- LED WALL SCONCE
- PARKING LOT POLE MOUNTED LIGHT FIXTURE
- BOLLARD LIGHT FIXTURE
- EXIT SIGN - CEILING MOUNTED (SHADE INDICATES FACE)
- EXIT SIGN - WALL MOUNTED (SHADE INDICATES FACE)
- EXIT SIGN - W/ARROWS INDICATE DIRECTION
- EMERGENCY BUG EYE FIXTURE WITH 90 MIN BATTERY BACKUP
- LIGHTING FIXTURE NOTATION A, 1, b INDICATES:
  A = FIXTURE TYPE, REFER TO SCHEDULE
  1 = CIRCUIT NUMBER
  b = SWITCH CONTROLLING FIXTURE
  ab =BI-LEVEL/DUAL SWITCH CONTROL
- HALF SHADED LINEAR LED OR SOLID DOWNLIGHT FIXTURE FURNISHED ON EMERGENCY POWER.
- WALL SWITCH, +48" OR AS NOTED: SUBSCRIPTS AT SYMBOL INDICATE THE FOLLOWING:
  - 2 - DOUBLE POLE (20A, 120/277V)
  - 3 - THREE WAY (20A, 120/277V)
  - 4 - FOUR WAY (20A, 120/277V)
  - D - DIMMER SWITCH (20A, 120/277V)
  - K - KEY OPERATED (20A, 120/277V)
  - M - MOTOR STARTING SWITCH (20A, 120/277V)
  - P - PILOT LIGHT (20A, 120/277V)
  - R - REMOTE CONTROL SWITCH (20A, 120/277V)
  - T - TIMER SWITCH (0-60 MIN.) (20A, 120/277V)
- OCCUPANCY SENSOR - CEILING
- OCCUPANCY SENSOR - WALL MOUNTED
- OCCUPANCY SENSOR w/DIMMER- WALL MOUNTED
- LC — LIGHTING CONTACTOR
- PC — PHOTOCELL
- PP — LIGHTING CONTROL POWER PACK

APPLICABLE CODES

2022 CALIFORNIA ELECTRICAL CODE (CEC)
PART 3, TITLE 24, CALIFORNIA CODE OF REGULATIONS (CCR)

2020 NATIONAL ELECTRICAL CODE (NEC) NFPA 70

2022 CALIFORNIA ADMINISTRATIVE CODE (CAC)
PART 1, TITLE 24, CALIFORNIA CODE OF REGULATIONS (CCR)

2022 CALIFORNIA BUILDING CODE (CBC)
PART 2, TITLE 24, CALIFORNIA CODE OF REGULATIONS (CCR)

2022 CALIFORNIA MECHANICAL CODE (CMC)
PART 4, TITLE 24, CALIFORNIA CODE OF REGULATIONS (CCR)

2022 CALIFORNIA PLUMBING CODE (CPC)
PART 5, TITLE 24, CALIFORNIA CODE OF REGULATIONS (CCR)

2022 CALIFORNIA ENERGY CODE (CEC)
PART 6, TITLE 24, CALIFORNIA CODE OF REGULATIONS (CCR)

2022 CALIFORNIA FIRE CODE (CFC)
PART 9, TITLE 24, CALIFORNIA CODE OF REGULATIONS (CCR)

2022 CALIFORNIA GREEN BUILDING CODE (CGBC)
PART 11, TITLE 24, CALIFORNIA CODE OF REGULATIONS (CCR)

ELECTRICAL SYMBOL LIST (CONT'D)

POWER

- SINGLE RECEPTACLE, NEMA 5-20R, 20A, 125V, MOUNT CENTER OF OUTLET AT 18" AFF UON
- DUPLEX RECEPTACLE, NEMA 5-20R, 20A, 125V RATED, MOUNT CENTER OF OUTLET AT 18" AFF UON
- DUPLEX RECEPTACLE 20A 125V RATED MOUNTED 6" ABOVE COUNTER SPLASH
- DUPLEX RECEPTACLE NEMA 5-20R, 20A, 125V GFCI TYPE MOUNT CENTER OF OUTLET AT 18" AFF UON
- DUPLEX RECEPTACLE NEMA 5-20R, 20A, 125V GFCI TYPE MOUNT CENTER OF OUTLET AT 18" AFF UON
- QUADPLEX RECEPTACLE, NEMA 5-20R, 20A, 125V, MOUNT CENTER OF OUTLET AT 18" AFF UON
- SPECIAL RECEPTACLE 480V RATED w/GROUND AS NOTED
- SPECIAL RECEPTACLE. 250V RATED WITH GROUND AS NOTED
- POWER FLOOR OUTLET WITH DEVICE AS INDICATED
- COMBINATION POWER / DATA FLOOR OUTLET AS INDICATED
- COMBINATION POWER / DATA FLOOR OUTLET NOTED SUITABLE FOR CONCRETE FLOORS NOTED SUITABLE FOR TYPE 5 CONSTRUCTION
- J — JUNCTION BOX
- JUNCTION BOX - WALL MOUNT
- PB — PULLBOX - EXTERIOR OR INTERIOR AS INDICATED
- LIGHTING AND APPLIANCE PANELBOARD - SURFACE MOUNT
- LIGHTING AND APPLIANCE PANELBOARD - FLUSH MOUNT
- SWITCHBOARD OR DISTRIBUTION BOARD
- 2P, m — 250V, 1 HP RATED MANUAL MOTOR STARTER SWITCH
- NON-FUSED DISCONNECT SWITCH (WITH SEALTITE RACEWAY CONNECTION
- F — FUSED DISCONNECT SWITCH
- CIRCUIT BREAKER
- FUSED DISCONNECT SWITCH
- SWITCH
- CURRENT TRANSFORMER (CT)
- POTENTIAL TRANSFORMER
- GROUNDING ELECTRODE
- M — UTILITY COMPANY POWER METER
- # — MOTOR (# INDICATED HP)
- M — CUSTOMER OWNED POWER METER

WIRING

- CONDUIT ROUTED EXPOSED
- CONDUIT ROUTED UNDER FLOOR/UNDERGROUND
- RACEWAY CONCEALED IN WALL OR CEILING 1/2"C, 2#12 AND 1#12 GND - TYPICAL U.N.O.
- RACEWAY TURNED UP 1/2"C, 2#12 AND 1#12 GND - TYPICAL U.N.O.
- RACEWAY TURNED DOWN 1/2"C, 2#12 AND 1#12 GND - TYPICAL U.N.O.
- HOMERUN — MIN. 3/4"C- HOMERUN TO PANELBOARD
- CONDUIT CAP-OFF

MISCELLANEOUS

- UNIT # — MECHANICAL EQUIPMENT TAG
- # SHEET — DIAGRAM TAG
- 1 — KEYNOTE PLAN SYMBOL
- 1 — DEMOLITION KEYNOTE PLAN SYMBOL
- 1 — REVISION SYMBOL
- XXX — FEEDER SCHEDULED EQUIPMENT
- XXXX — ELECTRICAL EQUIPMENT TAG

SIGNAL

- COMBINATION TELE/DATA OUTLET AT +18"
- TELEPHONE OUTLET AT +18"
- DATA OUTLET AT +18"
- TELE/DATA OUTLET MOUNTED 6" ABOVE COUNTER SPLASH
- TELEPHONE OUTLET MOUNTED 6" ABOVE COUNTER SPLASH
- DATA OUTLET MOUNTED 6" ABOVE COUNTER SPLASH
- TELE/DATA CEILING OUTLET
- DATA CEILING OUTLET
- CR — CARD READER
- FLUSH FLOOR BOX WITH COMBINATION TELE/DATA OUTLET
- TV — TELEVISION OUTLET
- TS — TIME SWITCH
- T — POWER TRANSFORMER. SIZE AND TYPE NOTED ON PLANS AND SPECIFICATIONS
- TELEPHONE BACKBOARD

STANDARD ABBREVIATIONS

A	AMPERE
AB	ABOVE BACK SPLASH
ADA	AMERICANS W/DISABILITIES ACT
A.F.F.	ABOVE FINISHED FLOOR
AF	ARC FAULT
AHU	AIR HANDLING UNIT
AMP	FUSE
AFG	ABOVE FINISHED GRADE
AIC	AMPERE INTERRUPTING CAPACITY
AL	ALUMINUM
ARCH'L	ARCHITECTURAL AS AMP SWITCH
ATS	AUTOMATIC TRANSFER SWITCH
AWG	AMERICAN WIRE GAUGE
BC	BARE COPPER
BLDG	BUILDING BLDG
C	CONDUIT
CAB	CABINET
CAT	CATALOG/CATEGORY
CB	CIRCUIT BREAKER
CKT	CIRCUIT
CLG	CEILING
CO	CONDUIT ONLY
CC	COMM COMMUNICATION
CU	COPPER
CTEP	CALIFORNIA TYPE EVALUATION PROGRAM
DEMO,(D)	DEMOLITION/DEMOLISH
DISC.	DISCONNECT
DN	DOWN
DWG	DRAWING
EA	EACH
EF	EXHAUST FAN
EG	EQUIPMENT GROUND
ELEC.	ELECTRICAL
ELEV	ELEVATOR
EM	EMERGENCY
EMT	ELECTRICAL METALLIC TUBING
EQUIP	EQUIPMENT
(E)	EXISTING TO REMAIN
EVCS	ELECTRICAL VEHICLE CHARGING STATION
FACP	FIRE ALARM CONTROL PANEL
FBO	FURNISHED BY OTHERS
FF	FINISHED FLOOR
FIXT	FIXTURE
FLA	FULL LOAD AMPS
FLEX	FLEXIBLE METALLIC CONDUIT (STEEL)
FLUOR	FLUORESCENT
FT	FEET OR FOOT
GFA	GROUND FAULT ALARM
GFCI	GROUND FAULT CIRCUIT INTERRUPTER
GND	GROUND
HP	HORSEPOWER
HVAC	HEATING, VENTILATING & AIR CONDITIONING
IBC	INTERNATIONAL BUILDING CODE
IMC	INTERMEDIATE METAL CONDUIT
IN	INCH(ES)
IRC	INTERNATIONAL RESIDENTIAL CODE
ISC	SHORT CIRCUIT AMPERES
JB, J-BOX	JUNCTION BOX
KCMIL& MCM	THOUSAND CIRCULAR MILS
KVA	KILOVOLT AMPERE
KW	KILOWATT
LCP	LIGHTING CONTROL PANEL
LRA	LOCK RUNNING AMPS
LOTO	LOCK OUT TAG OUT
LTG	LIGHTING
MAX.	MAXIMUM
MCA	MAXIMUM CIRCUIT AMP
MCB	MAIN CIRCUIT BREAKER
MCC	MOTOR CONTROL CENTER
MECH.	MECHANICAL
MIN.	MINIMUM
MLO	MAIN LUGS ONLY
MTD	MOUNTED
NC	NORMALLY CLOSED
NEC	NATIONAL ELECTRICAL CODE
NECA	NATIONAL ELECTRICAL CONTRACTOR'S ASSOCIATION
NEMA	NATIONAL ELECTRICAL MANUFACTURERS ASSOCIATION
NEUT	NEUTRAL
NFC	NATIONAL FIRE CODE
NF	NON-FUSIBLE
NFPA	NATIONAL FIRE PROTECTION ASSOCIATION
NIC	NOT IN CONTRACT
NO	NORMALLY OPEN
NTS	NOT TO SCALE
OCPD	OVER CURRENT PROTECTION DEVICE
P	POLE
PH	PHASE
PNL	PANEL
PV	PHOTOVOLTAIC
PVC	POLYVINYL CHLORIDE
PWR	POWER
QTY	QUANTITY
(R)	RELOCATE
RECEP	RECEPTACLE
REQ'D	REQUIRED
RGS	RIGID GALVANIZED STEEL
RSC	RIGID STEEL CONDUIT
SCHED	SCHEDULE
SECT	SECTION
SP	SINGLE POLE
SN	SOLID NEUTRAL
SPEC	SPECIFICATION
SW	SWITCH
SWBD	SWITCHBOARD
SWGR	SWITCH GEAR
SYS	SYSTEM
TEMP	TEMPORARY
TELE	TELEPHONE
T-STAT	THERMOSTAT
TTB	TELEPHONE TERMINAL BACKBOARD
TTC	TELEPHONE TERMINAL CABINET
TYP.	TYPICAL
UBC	UNIFORM BUILDING CODE
UL	UNDERWRITERS LABORATORY
U.N.O.	UNLESS NOTED OTHERWISE
V	VOLT OR VOLTAGE
VA	VOLT AMPERE
VD	VOLTAGE DROP
VFD	VARIABLE FREQUENCY DRIVE
VP	VAPOR PROOF
W	WATT, WIRE
WP	WEATHERPROOF, NEMA 3R
XFMR	TRANSFORMER

DRAWING NUMBER	TITLE
ELECTRICAL	
1-3513 AE-01	ELECTRICAL SYMBOL LIST SHEET INDEX
1-3513 AE-02	ELECTRICAL GENERAL NOTES
1-3513 AE-03	SINGLE LINE DIAGRAM - ROADABILITY CANOPY
1-3513 AE-04	SINGLE LINE DIAGRAM - WASHROOM
1-3513 AE-05	LIGHTING FIXTURE SCHEDULE AND SPECS
1-3513 AE-06	ELECTRICAL DETAILS
1-3513 AE-06A	ELECTRICAL LIGHTING CONTROL DETAILS
1-3513 AE-07	ELECTRICAL ROADABILITY CANOPY PLAN - POWER
1-3513 AE-08	ELECTRICAL ROADABILITY CANOPY PLAN - LIGHTING
1-3513 AE-09	ROADABILITY CANOPY PLAN - PHOTOMETRIC
1-3513 AE-10	ELECTRICAL WASHROOM FLOOR PLAN
1-3513 AE-11.1	ELECTRICAL T24 INDOOR FORMS
1-3513 AE-11.2	ELECTRICAL T24 OUTDOOR FORMS
1-3513 AE-11.3	ELECTRICAL T24 OUTDOOR FORMS

NO.	DATE	DRAWN	REVISIONS -	CHK'D	APP'D
A	3/20/25	-	30 % CONCEPT DESIGN		
B	4/25/25	-	FINAL CONCEPT DESIGN		
C	7/18/25	-	40 % DESIGN		
D	9/16/25	-	80 % DESIGN		

NOT FOR CONSTRUCTION

80% DESIGN REVIEW
SEP 19, 2025

Jacobs
2600 MICHELSON DRIVE, SUITE 500
IRVINE, CA 92612
T: (949) 224-7500
F: (949) 224-7501
IDS GROUP
1 PETERS CANYON ROAD, SUITE 130
IRVINE, CA 92606
TEL: 949-851-9500 FAX: 949-851-9800

REGISTERED PROFESSIONAL ENGINEER — EXP. — ELECTRICAL — STATE OF CALIFORNIA

SCALE: AS SHOWN
DRAWN: C. Gude
CHECKED: S. Collins
DESIGNED: M. Reed
ENGINEER / ARCHITECT

TERMINAL ISLAND MARITIME SUPPORT FACILITY

ELECTRICAL SYMBOL LIST SHEET INDEX

THE PORT OF LOS ANGELES
ENGINEERING DIVISION
425 S. PALOS VERDES STREET SAN PEDRO CA 90731-3309

DRAWING NUMBER: 1-3513
SHEET NUMBER: AE-01

RVT: Autodesk Docs://US CA_23377901_POLA TIMSFI1-3513-IDS-11-E_Roadability Canopy_R23.rvt
DATE: 9/19/2025 7:30:39 PM

1. SYMBOLS ARE NOT NECESSARILY USED IN THIS PROJECT.

2. IT IS THE INTENT OF THESE DRAWINGS AND SPECIFICATIONS TO ESTABLISH A STANDARD OF QUALITY. THE ENGINEER RESERVES THE RIGHT TO ALLOW OTHER METHODS AND MATERIALS NOT REFLECTED HEREIN. THE CONTRACTOR SHALL BE RESPONSIBLE TO REQUEST THE ENGINEER WAIVE THE STANDARDS TO ALLOW ALTERNATE MEANS AND METHODS PRIOR TO BEGINNING THE PROJECT. CONTRACT DOCUMENT REVISIONS TO ACCOMMODATE INSTALLED CONDITIONS, WITHOUT PRIOR APPROVAL, WILL RESULT IN ADDITIONAL DESIGN CHARGES TO THE CONTRACTOR.

3. ELECTRICAL WORK SHALL BE PERFORMED IN A WORKMANLIKE MANNER IN ACCORDANCE WITH THE NECA INSTALLATION STANDARDS TO THE SATISFACTION OF THE ARCHITECT AND ENGINEER.

4. WORK, MATERIALS AND EQUIPMENT SHALL CONFORM TO THE CURRENTLY ACCEPTED EDITION OF APPLICABLE NATIONAL, STATE AND CITY CODES AND ORDINANCES.

5. ELECTRICAL SYSTEM COMPONENTS SHALL BE LISTED OR LABELED BY UL OR OTHER RECOGNIZED TESTING FACILITY AS ALLOWED BY AUTHORITY HAVING JURISDICTION.

6. WHERE AN APPARENT DISCREPANCY EXISTS BETWEEN THE REQUIREMENTS OF THE GENERAL NOTES AND INFORMATION PORTRAYED IN THE ELECTRICAL DRAWINGS, THE CONTRACTOR SHALL INCLUDE IN HIS BID THE COST OF THE GREATER QUALITY OR QUANTITY.

7. CONTRACTOR SHALL VISIT JOB SITE PRIOR TO BID AND VERIFY EXISTING CONDITIONS. CONTRACTOR SHALL INCLUDE IN BASE BID COSTS REQUIRED FOR PERMITS AND INSPECTIONS.

8. CONTRACTOR SHALL VERIFY, WITH OWNER'S REPRESENTATIVE PRIOR TO SUBMITTING BID, ALLOWABLE WORKING HOURS, EMPLOYEE PARKING AREAS, MATERIAL DELIVERY, STORAGE REQUIREMENTS, DEMOLITION AND REMOVAL OF CONSTRUCTION DEBRIS, AS WELL AS DAILY CLEAN UP REQUIREMENTS. INCLUDE COSTS IN BID FOR DUST BARRIERS, DUMPSTERS ETC. AS REQUIRED FOR THE DURATION OF THE PROJECT. PERFORM WORK AS DIRECTED BY OWNER'S REPRESENTATIVE AND ARCHITECT.

9. ELECTRICAL SYSTEMS SHALL BE TESTED FOR PROPER OPERATION. IF TESTS SHOW THAT WORK IS DEFECTIVE, CONTRACTOR SHALL MAKE NECESSARY CORRECTIONS.

10. CONTRACTOR SHALL GUARANTEE WORK AGAINST DEFECTS IN MATERIALS AND WORKMANSHIP WHICH MAY OCCUR UNDER NORMAL USE FOR A PERIOD OF ONE YEAR AFTER OWNER'S ACCEPTANCE. DEFECTS SHALL BE PROMPTLY CORRECTED BY CONTRACTOR WITHOUT ADDITIONAL CHARGE TO OWNER.

11. PROVIDE AS-BUILT DRAWINGS TO ARCHITECT. DRAWINGS SHALL INCLUDE ACCURATE CONDUIT AND DEVICE LOCATIONS DIMENSIONED FROM PERMANENT LANDMARKS SUCH AS BUILDING WALLS.

12. DO NOT SCALE ELECTRICAL DRAWINGS. VERIFY EXACT LOCATION OF ALL DEVICES, JUNCTION BOXES, LIGHTING FIXTURES, WITH ARCHITECTURAL AND INTERIOR DESIGN DRAWINGS PRIOR TO INSTALLATION. CONTRACTOR SHALL VERIFY THE EXACT LOCATION OF MECHANICAL EQUIPMENT AND OTHER EQUIPMENT REQUIRING ELECTRICAL CONNECTION PRIOR TO ROUGH-IN. EVERY OUTLET HEIGHT SHALL BE VERIFIED ON EACH WALL WITH THE INTERIOR PLANNING AND DESIGN DRAWINGS. COORDINATE WITH CABINET SHOP DRAWINGS TO ENSURE PROPER HEIGHT AND LOCATION WITH RESPECT TO MILLWORK, EQUIPMENT.

13. THESE DRAWINGS INDICATE THE FINISHED REQUIREMENTS FOR THE ELECTRICAL SYSTEMS, EQUIPMENT, LIGHTING FIXTURES, OUTLETS AND DEVICES. DUE TO STRUCTURAL CONDITIONS, MECHANICAL DUCT, PIPING CONFLICTS, OR OTHER LEGITIMATE REASONS, THE CONTRACTOR MAY DESIRE TO INSTALL THE WORK INDICATED IN A MANNER DIFFERENT FROM THAT SHOWN. SUCH CHANGES SHALL BE PRESENTED TO THE OWNER'S REPRESENTATIVE FOR REVIEW AND APPROVAL PRIOR TO PROCEEDING. UPON APPROVAL, THE WORK SHALL BE PERFORMED AND THE AS-BUILT DRAWINGS SHALL BE REVISED TO ACCURATELY REFLECT THE WORK AS ACTUALLY INSTALLED.

14. RACEWAY SYSTEMS ARE SHOWN DIAGRAMMATICALLY. ACTUAL LOCATION AND ROUTING SHALL BE DETERMINED BY CONTRACTOR TO SUIT FIELD CONDITIONS.

15. PROVIDE DEDICATED NEUTRAL FOR EACH NEW CIRCUIT. HOME RUN CONDUCTORS MAY BE COMBINED INTO ONE CONDUIT. NO RACEWAY OR CABLE SHALL CONTAIN MORE THAN NINE (9) CURRENT CARRYING CONDUCTORS. WHERE MULTIPLE CONDUCTORS IN EXCESS OF THREE (3) ARE INDICATED ON THESE DRAWINGS, THEY HAVE BEEN DERATED AS REQUIRED BY NEC ARTICLE 310 REQUIREMENTS.

16. WHERE ALLOWED, MC CABLE MAY BE INSTALLED PER NEC ARTICLE 330. WHERE MULTIPLE CABLES ARE ROUTED ADJACENT TO EACH OTHER (BUNDLED), A MINIMUM SEPARATION OF ONE (1) CABLE DIAMETER (LARGEST) SHALL BE REQUIRED.

17. PLASTIC CABLE TIES SHALL NOT BE USED AS A MEANS OF SUPPORT FOR MC CABLE. USE ONLY APPROVED CABLE SUPPORTS PER CABLE MANUFACTURER'S INSTALLATION REQUIREMENTS.

18. RACEWAYS SHALL BE INSTALLED CONCEALED (IN CMU OR OTHER WALL) WHENEVER POSSIBLE. RACEWAYS INSTALLED EXPOSED SHALL BE ROUTED OUT OF PUBLIC VIEW AS MUCH AS POSSIBLE. RACEWAYS SHALL BE RUN PARALLEL WITH, OR AT RIGHT ANGLE TO WALLS.

19. PROVIDE APPROVED EXPANSION FITTINGS WHERE RACEWAYS CROSS BUILDING EXPANSION JOINTS. PROVIDE BONDING JUMPER(S) SIZED PER CODE WHERE REQUIRED. PROVIDE FITTINGS REQUIRED FOR A COMPLETE INSTALLATION. REFER TO ARCHITECTURAL DRAWINGS FOR EXPANSION JOINT LOCATION(S).

20. MINIMUM RACEWAY SIZE SHALL BE 1/2". MINIMUM HOMERUN SIZE SHALL BE 3/4". MINIMUM CONDUCTOR SIZE SHALL BE # 12 AWG U.N.O. TYPICAL. POWER RELATED CONDUITS SHALL HAVE A CODE SIZE GROUND WIRE INSTALLED IN EACH RUN.

21. CONTRACTOR SHALL PROVIDE PULL CORDS IN ALL EMPTY CONDUITS. WHERE MORE THAN ONE CONDUIT TERMINATES IN A JUNCTION BOX, THE CONTRACTOR SHALL IDENTIFY EACH CONDUIT AND JUNCTION BOX IN A MANNER ALLOWING IDENTIFICATION AFTER WALL FINISHES HAVE BEEN APPLIED.

22. CONTRACTOR SHALL PROVIDE RACEWAY SYSTEMS INDICATED ON THE DRAWING PER NEC REQUIREMENTS AND GENERAL NOTES. ANY DEVIATION FROM THE WIRING METHODS INDICATED SHALL BE ALLOWED ONLY BY SPECIFIC WRITTEN APPROVAL FROM EITHER THE ARCHITECT, ENGINEER OR OWNER. CONTRACTOR'S BID SHALL INCLUDE COSTS FOR RACEWAY SYSTEMS AS SPECIFIED UNLESS SPECIFIC WRITTEN APPROVAL FOR AN ALTERNATIVE WIRING METHOD IS OBTAINED FROM EITHER THE ARCHITECT, ENGINEER OR OWNER AND IS SUBMITTED AS PART OF CONTRACTOR'S FORMAL BID PROPOSAL.

23. CONTRACTOR SHALL BE RESPONSIBLE FOR CORRECT SIZE AND INSTALLATION OF OUTLET, PULL AND JUNCTION BOXES IN ACCORDANCE WITH NEC 314-16. BOXES SHALL BE MINIMUM 4" SQUARE BY 1-1/2" DEEP OR AS INDICATED ON THE DRAWINGS. BOXES SHALL BE RECESSED WITH COVER PLATE TO SUIT THE INTENDED APPLICATION.

23. CONTRACTOR SHALL BE RESPONSIBLE FOR CORRECT SIZE AND INSTALLATION OF OUTLET, PULL AND JUNCTION BOXES IN ACCORDANCE WITH NEC 314-16. BOXES SHALL BE MINIMUM 4" SQUARE BY 1-1/2" DEEP OR AS INDICATED ON THE DRAWINGS. BOXES SHALL BE RECESSED WITH COVER PLATE TO SUIT THE INTENDED APPLICATION.

24. REFER TO THE ARCHITECTURAL REFLECTED CEILING PLAN(S) FOR EXACT LOCATION OF CEILING MOUNTED LIGHTING FIXTURES. ARCHITECTURAL DRAWINGS SHALL GOVERN IN CASE OF CONFLICT WITH THESE DRAWINGS.

25. PRIOR TO INSTALLATION, CONTRACTOR SHALL REVIEW THE COMPLETE SET OF CONSTRUCTION DOCUMENTS FOR CONFLICTS WITH OTHER TRADES. CONTRACTOR SHALL BE RESPONSIBLE TO COORDINATE WORK WITH OTHER TRADES TO AVOID CONFLICT DURING INSTALLATION. CONTRACTOR SHALL MAKE MINOR ADJUSTMENTS IN EQUIPMENT LOCATION AND ROUTING AS NECESSARY.

26. CONTRACTOR SHALL BE RESPONSIBLE TO PROPERLY CUT AND PATCH EXISTING CONSTRUCTION AS REQUIRED TO INSTALL NEW ELECTRICAL WORK PATCHING SHALL BE OF THE SAME MATERIALS, WORKMANSHIP AND FINISH AS THE EXISTING WORK AND SHALL ACCURATELY MATCH SURROUNDING WORK TO THE SATISFACTION OF THE ARCHITECT.

27. ELECTRICAL EQUIPMENT SHALL HAVE SUFFICIENT GUTTER SPACE AND LUGS TO ACCOMMODATE QUANTITY AND SIZE OF CONDUCTORS REQUIRED. CONTRACTORS SHALL PROVIDE EQUIPMENT WITH OVERSIZED ENCLOSURES WHERE REQUIRED.

28. NEW PANELBOARDS AND SWITCHBOARDS SHALL BE OF THE SAME MANUFACTURER AND HAVE LOCKING DOORS AND BE KEYED THE SAME U.N.O.

29. PROVIDE TYPE WRITTEN UPDATED PANEL DIRECTORY TO BE MOUNTED ON INSIDE OF PANEL DOOR COVERS. DIRECTORY SHALL REFLECT ADDITIONS OR MODIFICATIONS TO EXISTING PANELS AND SHALL REFLECT ACTUAL "AS-BUILT" CONDITIONS.

30. VERIFY DEVICE COLOR AND MOUNTING ORIENTATION (VERTICAL OR HORIZONTAL) WITH ARCHITECTURAL AND INTERIOR DESIGN DRAWINGS PRIOR TO ORDERING ANY EQUIPMENT AND PROVIDE DEVICES AS REQUIRED. UNLESS NOTED OTHERWISE, DEVICES AND DEVICE PLATES SHALL BE WHITE IN COLOR.

31. WHERE MOTORS ARE INSTALLED IN SUSPENDED CEILINGS, CONTRACTOR SHALL PROVIDE DISCONNECT SWITCH IN SUSPENDED CEILING WITHIN REACH FROM ACCESS POINT.

32. SIZING OF MOTOR-RELATED ELECTRICAL COMPONENTS, INCLUDING FEEDER AND/ OR BRANCH CIRCUITS (WIRE AND CONDUIT) AND OVERCURRENT PROTECTION (BREAKER AND/ OR FUSES) IS BASED ON RATINGS INDICATED IN THE CONTRACT DOCUMENTS AS WELL AS NEC APPROXIMATED LOADS FOR A GIVEN MOTOR HORSEPOWER, VOLTAGE AND PHASE. IT IS THE CONTRACTOR'S RESPONSIBILITY TO VERIFY ACTUAL MOTOR AND APPLIANCE RATING AND LOADS. CONTRACTOR TO PROVIDE CORRECTLY SIZED MOTOR OVERLOAD ELECTRICAL COMPONENTS BASED ON NAMEPLATE RATING. REFLECT CHANGES IN THE AS-BUILT DRAWINGS.

33. CONTRACTOR SHALL SUBMIT SHOP DRAWINGS TO ARCHITECT FOR REVIEW OF THE FOLLOWING EQUIPMENT:

a. ELECTRICAL SWITCHGEAR: SWITCHBOARDS, WITH PANELS, MOTOR CONTROL CENTERS AND SAFETY DEVICES.
b. OVER CURRENT DEVICES: CIRCUIT BREAKERS AND FUSES INCLUDING TIME/CURRENT TRIP CURVES.
c. LIGHTING FIXTURES: INDOOR/OUTDOOR AS SPECIFIED, PHOTOMETRIC PERFORMANCE DATA AND LAMPS.
d. DEVICES: SWITCHES, RECEPTACLES, MOTOR CONTROLLERS AND DEVICE PLATES.

34. EQUIPMENT ELECTRICAL TERMINATIONS TO UNDERGO A TORQUE TEST. ELECTRICAL CONTRACTOR IS RESPONSIBLE FOR MANUFACTURER'S RECOMMENDED TORQUE DOCUMENTATION AND TOOLS TO PERFORM TORQUE TEST.

35. FLOOR MOUNTED ELECTRICAL EQUIPMENT SHALL BE MOUNTED ON A 4" HIGH CONCRETE PAD.

36. INSTALL TRANSFORMER FOLLOWING MANUFACTURER'S RECOMMENDATIONS FOR VENTILATION CLEARANCES.

37. COORDINATE ELECTRICAL REQUIREMENTS FOR PLUMBING AND MECHANICAL EQUIPMENT WITH FINAL CONTRACTOR SELECTION. THE CONTRACTOR SHALL SIZE DISCONNECTS BASED UPON CIRCUIT BREAKER RATINGS AND PROVIDE FUSING AS REQUIRED PER EQUIPMENT MANUFACTURER RECOMMENDATIONS AND U.L. LISTING REQUIREMENTS.

38. ALL ELECTRICAL EQUIPMENT SHALL BE LABELED, LISTED, OR CERTIFIED BY A NATIONALLY RECOGNIZED TESTING LABORATORY ACCREDITED BY THE UNITED STATES OCCUPATIONAL SAFETY HEALTH ADMINISTRATION.

39. ALL NEW CIRCUIT BREAKERS INSTALLED IN PANELS SHALL MATCH THE HIGHEST EXISTING AIC RATED CIRCUIT BREAKER WITHIN THAT BOARD. INSPECTOR TO VERIFY HIGHEST AIC RATING AT THE SITE."

NO.	DATE	DRAWN	REVISIONS -	CHK'D	APP'D
A	3/20/25	-	30 % CONCEPT DESIGN		
B	4/25/25	-	FINAL CONCEPT DESIGN		
C	7/18/25	-	40 % DESIGN		
D	9/16/25	-	80 % DESIGN		

NOT FOR CONSTRUCTION

NO.	DATE	DRAWN	REVISIONS -	CHK'D	APP'D

80% DESIGN REVIEW
SEP 19, 2025

Jacobs
2600 MICHELSON DRIVE, SUITE 500
IRVINE, CA 92612
T: (949) 224-7500
F: (949) 224-7501

IDS
IDS GROUP
1 PETERS CANYON ROAD, SUITE 130
IRVINE, CA 92606
TEL: 949-387-8500, FAX: 949-387-0800

REGISTERED PROFESSIONAL ENGINEER
EXP.
ELECTRICAL
STATE OF CALIFORNIA

SCALE: AS SHOWN
DRAWN: C. Gude
CHECKED: S. Collins
DESIGNED: M. Reed
ENGINEER / ARCHITECT

TERMINAL ISLAND MARITIME SUPPORT FACILITY

ELECTRICAL GENERAL NOTES

THE PORT OF LOS ANGELES
ENGINEERING DIVISION
425 S. PALOS VERDES STREET SAN PEDRO CA 90731-3309

DRAWING NUMBER 1-3513
SHEET NUMBER AE-02

RVT: Autodesk Docs://US CA_D3371901_POLA TIMSF/1-3513-IDS-11-E_Roadability Canopy_R25.rvt
DATE: 9/18/2025 7:40:54 PM

GENERAL NOTES

1. ALL ENCLOSURES SHALL BE 304 S.S.
2. ALL UNDERGROUND RACEWAYS SHALL BE SCHEDULE 40 PVC ENCASED ON CONCRETE.
3. ALL EXPOSED RACEWAY AND ASSOCIATED FITTINGS SHALL BE PVC COATED RMC.
4. ALL BUSSING SHALL BE COPPER.
5. ALL TRANSFORMER WINDINGS SHALL BE COPPER.
6. ALL GROUNDING MATERIALS SHALL BE COPPER.
7. ALL FEEDER AND BRANCH CIRCUIT WIRING SHALL BE XHHW-2 COPPER.

KEY NOTES (#)

(1) EXTEND NEW RACEWAY FROM PANELBOARD LOCATION DOWN BELOW GRADE, AND EXTEND 5 FEET FROM THE BUILDING; COORDINATE EXACT REQUIREMENTS WITH SITE CONTRACTOR. CONDUCTORS AND RACEWAY TO SITE ELECTRICAL DISTRIBUTION SYSTEM BY SITE CONTRACTOR.

(2) 3/4"C, (1)#8 GEC. BOND TO BUILDING STEEL BY EXOTHERMIC WELD.

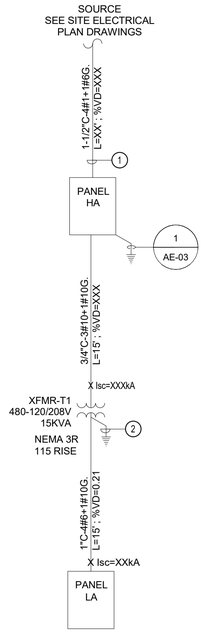

1AE-03 / AE-03 SINGLE LINE DIAGRAM
SCALE: 12" = 1'-0"

PANEL - HA

MOUNTING: SURFACE
ENCLOSURE: NEMA 3R 304 S.S
FED FROM: SOURCE
LOCATION: SEE PLAN

SOLID NEUTRAL

MAIN: 125 A
VOLTS: 480/277 wye
PHASE: 3
WIRE: 4
SCCR: 22
ISC UNKNOWN

NOTES:

KEY	CKT NO.	LOAD DESCRIPTION	OCPD AMPS	P	WIRE SIZE H	N	G	A		B		C		WIRE SIZE G	N	H	P	OCPD AMPS	LOAD DESCRIPTION	CKT NO.	KEY
	1	CANOPY LIGHTS	20 A	1	12	12	12	1	2.08					10		10	2	25 A	WELDER - 1	2	
	3	AIR COMPRESSOR 15 HP	30 A	3	10	10	10			5.82	2.08			--	--	--	--	--	--	4	--
--	5	--	--	--	--	--	--					5.82	2.08	10		10	2	25 A	WELDER - 2	6	
--	7	--	--	--	--	--	--	5.82	2.08					--	--	--	--	--	--	8	--
	9	TRANSFORMER - T1	30 A	3	10	10	10			3.67	2.08			10		10	2	25 A	WELDER - 3	10	
--	11	--	--	--	--	--	--					2.71	2.08	--	--	--	--	--	--	12	--
--	13	--	--	--	--	--	--	2.87	2.08					10		10	2	25 A	WELDER - 4	14	
--	15	SPARE	20 A	1	--	--	--			0	2.08			--	--	--	--	--	--	16	--
--	17	SPARE	20 A	1	--	--	--					0	2.08	10		10	2	25 A	WELDER - 5	18	
--	19	SPARE	20 A	1	--	--	--	0	2.08					--	--	--	--	--	--	20	--
--	21	SPARE	20 A	1	--	--	--			0	2.08			10		10	2	25 A	WELDER - 6	22	
--	23	SPARE	20 A	1	--	--	--					0	2.08	--	--	--	--	--	--	24	--
--	25	SPARE	20 A	1	--	--	--	0	2.08					10		10	2	25 A	WELDER - 7	26	
--	27	SPARE	20 A	1	--	--	--			0	2.08			--	--	--	--	--	--	28	--
--	29	SPARE	20 A	1	--	--	--					0	--	--	--	--	1	--	SPACE	30	--
							Total Load:	19.94 kVA		19.83 kVA		16.84 kVA									
							Total Amps:	73.65		73.26		60.80									

LOAD SUMMARY

LOAD CLASSIFICATION	CONNECTED LOAD	DEMAND FACTOR	ESTIMATED DEMAND	TOTALS*	
Lighting	1500 VA	125.00%	1875 VA		
Motor	17458 VA	125.00%	21823 VA	**TOTAL CONNECTED LOAD:**	56.61 kVA
Power	32030 VA	100.00%	32030 VA	**TOTAL ESTIMATED DEMAND LOAD:**	61310 VA
Receptacle	5760 VA	100.00%	5760 VA	**TOTAL CONNECTED AMPS:**	68.09 A
				TOTAL ESTIMATED DEMAND AMPS:	74 A

*TOTAL DEMAND CALCS SUBTRACT ANY REDUNDANT LOAD AND THE SMALLER OF ANY NONCOINCIDENT HVAC LOADS. THIS CALC IS DONE AT EACH PANEL.

CIRCUIT KEY NOTES:

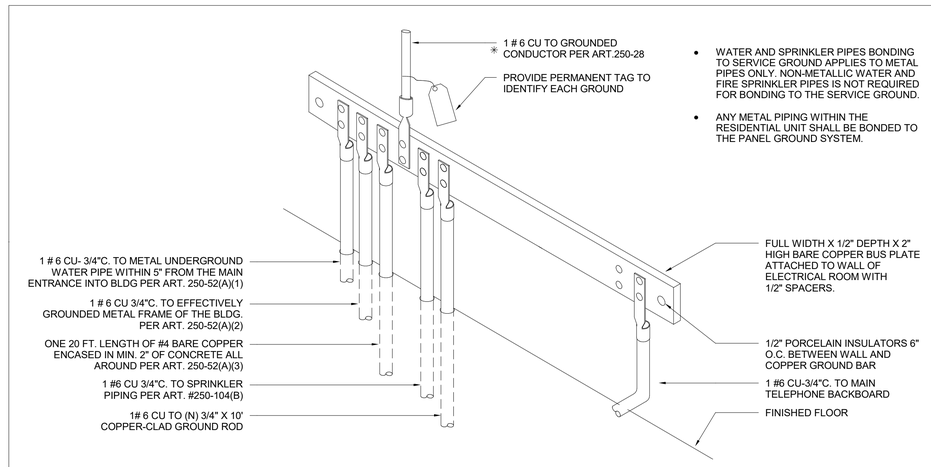

BUILDING GROUND SYSTEM DETAIL | NO SCALE | 1

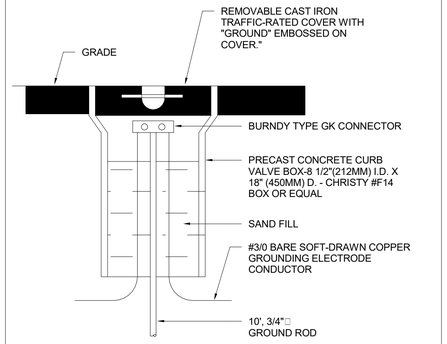

GROUNDING ELECTRODE TEST WELL | NO SCALE | 2

PANEL - LA

MOUNTING: SURFACE
ENCLOSURE: NEMA 3R 304 S.S.
FED FROM: PNL - HA VIA XFMR- T1
LOCATION: SEE PLAN

SOLID NEUTRAL

MAIN: 60 A
VOLTS: 208/120V Wye
PHASE: 3
WIRE: 4
SCCR: 22 Kaic
ISC UNKNOWN

NOTES:

KEY	CKT NO.	LOAD DESCRIPTION	OCPD AMPS	P	WIRE SIZE H	N	G	A		B		C		WIRE SIZE G	N	H	P	OCPD AMPS	LOAD DESCRIPTION	CKT NO.	KEY
	1	STOP AND GO INDICATOR LIGHTS	20 A	1	12	12	12	0.6	0.72					12	12	12	1	20 A	GEN RECEPT	2	
	3	STOP AND GO INDICATOR LIGHTS	20 A	1	12	12	12			0.6	0.72			12	12	12	1	20 A	GEN RECEPT	4	
	5	LANE CONTROLLER (LA) FBO	20 A	1	12	12	12					1	0.72	10	10	10	1	20 A	GEN RECEPT	6	
	7	TEL/COM TERMINAL CABINET	20 A	1	12	12	12	1	0.72					10	10	10	1	20 A	GEN RECEPT	8	
--	9	SPARE	20 A	1	--	--	--			0	0.72			12	12	12	1	20 A	GEN RECEPT	10	
--	11	SPARE	20 A	1	--	--	--					0	0.72	12	12	12	1	20 A	GEN RECEPT	12	
--	13	SPARE	20 A	1	--	--	--	0	0.72					10	10	10	1	20 A	GEN RECEPT	14	
--	15	SPARE	20 A	1	--	--	--			0	0.72			10	10	10	1	20 A	GEN RECEPT	16	
--	17	SPARE	20 A	1	--	--	--					0	--	--	--	--	1	--	SPACE	18	--
--	19	SPARE	20 A	1	--	--	--	0	--					--	--	--	1	--	SPACE	20	--
--	21	SPARE	20 A	1	--	--	--			0	--			--	--	--	1	--	SPACE	22	--
--	23	SPARE	20 A	1	--	--	--					0	--	--	--	--	1	--	SPACE	24	--
--	25	SPARE	20 A	1	--	--	--	0	--					--	--	--	1	--	SPACE	26	--
--	27	SPARE	20 A	1	--	--	--			0	--			--	--	--	1	--	SPACE	28	--
--	29	SPARE	20 A	1	--	--	--					0	0.5		12	12	1	20 A	LCP	30	
							Total Load:	3.67 kVA		2.71 kVA		2.87 kVA									
							Total Amps:	30.75		22.61		24.08									

LOAD SUMMARY

LOAD CLASSIFICATION	CONNECTED LOAD	DEMAND FACTOR	ESTIMATED DEMAND	TOTALS*	
Lighting	500 VA	125.00%	625 VA		
Power	3200 VA	100.00%	3200 VA	**TOTAL CONNECTED LOAD:**	9.23 kVA
Receptacle	5760 VA	100.00%	5760 VA	**TOTAL ESTIMATED DEMAND LOAD:**	9352 VA
				TOTAL CONNECTED AMPS:	25.63 A
				TOTAL ESTIMATED DEMAND AMPS:	26 A

*TOTAL DEMAND CALCS SUBTRACT ANY REDUNDANT LOAD AND THE SMALLER OF ANY NONCOINCIDENT HVAC LOADS. THIS CALC IS DONE AT EACH PANEL.

CIRCUIT KEY NOTES:

NO.	DATE	DRAWN	REVISIONS -	CHK'D	APP'D
A	3/20/25	-	30 % CONCEPT DESIGN		
B	4/25/25	-	FINAL CONCEPT DESIGN		
C	7/18/25	-	40 % DESIGN		
D	9/16/25	-	80 % DESIGN		

NOT FOR CONSTRUCTION

NO.	DATE	DRAWN	REVISIONS -	CHK'D	APP'D

80% DESIGN REVIEW SEP 19, 2025

Jacobs
2600 MICHELSON DRIVE, SUITE 500
IRVINE, CA 92612
T: (949) 224-7500
F: (949) 224-7501
IDS GROUP
1 PETERS CANYON ROAD, SUITE 130
IRVINE, CALIFORNIA 92606
TEL: 949.955.1580 FAX: 949.955.9650

REGISTERED PROFESSIONAL ENGINEER — ELECTRICAL — STATE OF CALIFORNIA — EXP. _____

SCALE: AS SHOWN
DRAWN: C. Gude
CHECKED: S. Collins
DESIGNED: M. Reed
ENGINEER / ARCHITECT

TERMINAL ISLAND MARITIME SUPPORT FACILITY

SINGLE LINE DIAGRAM - ROADABILITY CANOPY

THE PORT OF LOS ANGELES
ENGINEERING DIVISION
425 S. PALOS VERDES STREET SAN PEDRO CA 90731-3309

DRAWING NUMBER 1-3513
SHEET NUMBER AE-03

RVT: Autodesk Docs://US CA_D3371901_PDLA TIMSFI1-3513-IDS-11-E_Roadability Canopy_R25.rvt
DATE: 9/19/2025 7:45:54 PM

GENERAL NOTES

1. ALL ENCLOSURES SHALL BE 304 S.S.
2. ALL UNDERGROUND RACEWAYS SHALL BE SCHEDULE 40 PVC ENCASED ON CONCRETE.
3. ALL EXPOSED RACEWAY AND ASSOCIATED FITTINGS SHALL BE PVC COATED RMC.
4. ALL BUSSING SHALL BE COPPER.
5. ALL TRANSFORMER WINDINGS SHALL BE COPPER.
6. ALL GROUNDING MATERIALS SHALL BE COPPER.
7. ALL FEEDER AND BRANCH CIRCUIT WIRING SHALL BE XHHW-2 COPPER.

KEYNOTES (#)

1. PROVIDE 30 KVA, 480-208/120V, 3 PHASE, 4 WIRE MINI POWER ZONE, NEMA 3R, 35 KAIC, BOLT-ON CIRCUIT BREAKERS, (27) 1-POLE BRANCH CIRCUIT SPACES, 90A, 3P PRIMARY MCB (PRIMARY), 100A, 3P MCB (SECONDARY).
2. EXTEND NEW RACEWAY FROM PANELBOARD LOCATION DOWN BELOW GRADE, AND EXTEND 5 FEET FROM THE BUILDING; COORDINATE EXACT REQUIREMENTS WITH SITE CONTRACTOR. CONDUCTORS AND RACEWAY TO SITE ELECTRICAL DISTRIBUTION SYSTEM BY SITE CONTRACTOR.

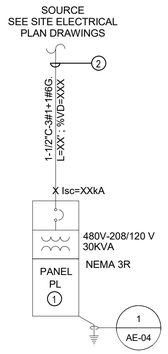

1AE-04 **SINGLE LINE DIAGRAM**
SCALE: 12" = 1'-0"

PANEL PL

MOUNTING: SURFACE
ENCLOSURE: NEMA 3R 304 S.S
FED FROM: SOURCE
LOCATION: SEE PLAN

SOLID NEUTRAL GROUND BUS

MAIN: 100 A MCB
VOLTS: 208/120V Wye
PHASE: 3
WIRE: 4
SCCR: 35 kA
ISC UNKNOWN 0.00 kA

NOTES:

KEY	CKT NO.	LOAD DESCRIPTION	OCPD AMPS	P	WIRE SIZE H	N	G	VD %	A	B	C	VD %	WIRE SIZE G	N	H	OCPD P	AMPS	LOAD DESCRIPTION	CKT NO.	KEY
	1	RM 101 UNISEX RESTRM REC	20 A	1	12	12	12		0.18	2.25						10	10	10	2	30 A	WATER HEATER	2	
	3	RM 102 UNISEX RESTRM REC	20 A	1	12	12	12				0.18	2.25				--	--	--	--	--	--	4	--
	5	RM 103 UNISEX RESTRM REC	20 A	1	12	12	12						0.18	0.79		12	12	12	1	20 A	RM UNISEX RESTRMS WALL PACK...	6	
	7	RM 104 UNISEX RESTRM REC	20 A	1	12	12	12		0.18	0.45						12	12	12	1	15 A	RM UNISEX RESTRM EX FAN , LTS	8	
	9	RM 108 UTILTIY GEN REC	20 A	1	12	12	12				0.36	1.8				12	12	12	1	20 A	RM 101 HAND DRYER	10	1
--	11	SPARE	20 A	1	--	--	--						0	1.8		12	12	12	1	20 A	RM 102 HAND DRYER	12	1
--	13	SPARE	20 A	1	--	--	--		0	1.8						12	12	12	1	20 A	RM 103 HAND DRYER	14	1
--	15	SPARE	20 A	1	--	--	--				0	1.8				12	12	12	1	20 A	RM 104 HAND DRYER	16	1
--	17	SPARE	20 A	1	--	--	--						0	0.18		12	12	12	1	20 A	OUTDOOR GEN RECPT	18	
--	19	SPARE	20 A	1	--	--	--		0	1.8						12	12	12	1	20 A	CP-1	20	
--	21	SPARE	20 A	1	--	--	--				0	0				--	--	--	1	20 A	SPARE	22	--
--	23	SPARE	20 A	1	--	--	--						0	0		--	--	--	1	20 A	SPARE	24	--
--	25	SPARE	20 A	1	--	--	--		0	0						--	--	--	1	20 A	SPARE	26	--
--	27	SPARE	20 A	1	--	--	--				0	0				--	--	--	1	20 A	SPARE (DO NOT USE)	28	--
						Total Load:			6.62 kVA		6.34 kVA		2.92 kVA									
						Total Amps:			59.57		57.23		24.31									

LOAD SUMMARY

LOAD CLASSIFICATION	CONNECTED LOAD	DEMAND FACTOR	ESTIMATED DEMAND	TOTALS*	
Lighting	1234 VA	100.00%	1234 VA		
Power	13500 VA	100.00%	13500 VA	**TOTAL CONNECTED LOAD:**	15.88 kVA
Receptacles	1260 VA	100.00%	1260 VA	**TOTAL ESTIMATED DEMAND LOAD:**	15878 VA
				TOTAL CONNECTED AMPS:	44.07 A
				TOTAL ESTIMATED DEMAND AMPS:	44 A

*TOTAL DEMAND CALCS SUBTRACT ANY REDUNDANT LOAD AND THE SMALLER OF ANY NONCOINCIDENT HVAC LOADS. THIS CALC IS DONE AT EACH PANEL.

CIRCUIT KEY NOTES: 1. CB WITH LOCK-OFF HANDLE LOCK ACCESSORY.

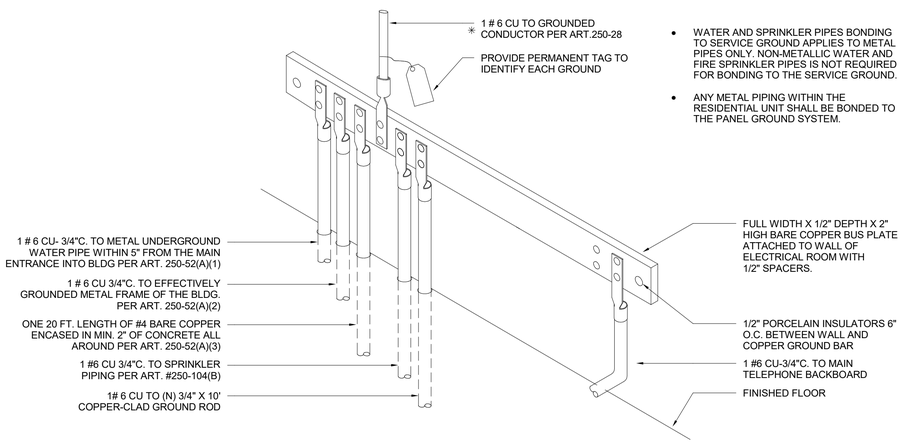

- WATER AND SPRINKLER PIPES BONDING TO SERVICE GROUND APPLIES TO METAL PIPES ONLY. NON-METALLIC WATER AND FIRE SPRINKLER PIPES IS NOT REQUIRED FOR BONDING TO THE SERVICE GROUND.
- ANY METAL PIPING WITHIN THE RESIDENTIAL UNIT SHALL BE BONDED TO THE PANEL GROUND SYSTEM.

BUILDING GROUND SYSTEM DETAIL | NO SCALE | 1

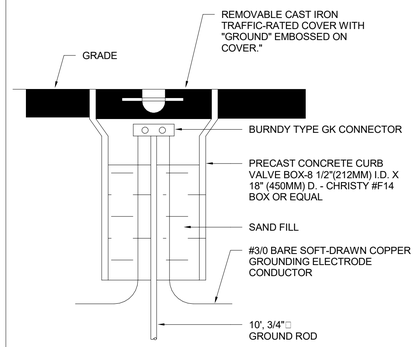

GROUNDING ELECTRODE TEST WELL | NO SCALE | 2

NO.	DATE	DRAWN	REVISIONS -	CHK'D	APP'D
A	3/20/25	-	30 % CONCEPT DESIGN		
B	4/25/25	-	FINAL CONCEPT DESIGN		
C	7/18/25	-	40 % DESIGN		
D	9/16/25	-	80 % DESIGN		

NOT FOR CONSTRUCTION

NO.	DATE	DRAWN	REVISIONS -	CHK'D	APP'D

80% DESIGN REVIEW
SEP 19, 2025

Jacobs
2920 MICHELSON DRIVE, SUITE 500
IRVINE, CA 92612
T: (949) 224-7500
F: (949) 224-7501
IDS
IDS GROUP
1 PETER LEWIS ROAD, SUITE 100
PRAIA, CA 96064
TEL: 949.887.9052 FAX: 949.887.9960

REGISTERED PROFESSIONAL ENGINEER — ELECTRICAL — STATE OF CALIFORNIA — EXP.

SCALE: AS SHOWN
DRAWN: C. Gude
CHECKED: S. Collins
DESIGNED: M. Reed
ENGINEER / ARCHITECT

TERMINAL ISLAND MARITIME SUPPORT FACILITY

SINGLE LINE DIAGRAM - WASHROOM

THE PORT OF LOS ANGELES
ENGINEERING DIVISION
425 S. PALOS VERDES STREET SAN PEDRO CA 90731-3309

DRAWING NUMBER: 1-3513
SHEET NUMBER: AE-04

RVT: Autodesk Docs://US CA_DSTP361_PDLA TIMSF1-3513-IDS-11-E_WashRoom_R25.rvt
DATE: 9/16/2025 7:43:39 PM

WDGE1 LED
Architectural Wall Sconce



Catalog Number: WDGE1 LED P2 40K 80CRI VW MVOLT SRM PE DBXD

Notes

Type: F4

Hit the link for an interactive driver guide to see all connected elements.

Specifications

Depth (D1): 5.5"
Depth (D2): 1.5"
Height: 8"
Width: 9"
Weight: (without options) 9 lbs



Introduction

The WDGE LED family is designed to meet specifier's every wall-mounted lighting need in a widely accepted shape that blends with any architecture. The clean rectilinear design comes in four sizes with lumen packages ranging from 1,200 to 25,000 lumens, providing true site-wide solution.

WDGE1 delivers up to 2,000 lumens with a soft, non-pixelated light source, creating a visually comfortable environment. The compact size of WDGE1, with its integrated emergency battery backup option, makes it an ideal over-the-door wall-mounted lighting solution.

design select Items marked by a shaded background qualify for the Design Select program and ship in 15 days or less. To learn more about Design Select, visit www.acuitybrands.com/designselect. *See ordering tree for details

WDGE LED Family Overview

Luminaire	Optics	Standard EM, 0°C	Cold EM, -20°C	Sensor	Approximate Lumens (4000K, 80CRI)						
					P0	P1	P2	P3	P4	P5	P6
WDGE1 LED	Visual Comfort	4W		--	750	1,200	2,000	--	--	--	--
WDGE2 LED	Visual Comfort	10W	18W	Standalone / nLight	--	1,200	2,000	3,000	4,500	6,000	--
WDGE2 LED	Precision Refractive	10W	18W	Standalone / nLight	700	1,200	2,000	3,200	4,200	--	--
WDGE3 LED	Precision Refractive	15W	18W	Standalone / nLight	6,000	7,500	8,500	10,000	12,000	--	--
WDGE4 LED	Precision Refractive			Standalone / nLight	--	12,000	16,000	18,000	20,000	22,000	25,000

Ordering Information

EXAMPLE: WDGE1 LED P2 40K 80CRI VF MVOLT SRM PE DDBXD

Series	Package	Color Temperature	CRI	Distribution	Voltage	Mounting
WDGE1 LED	P0 27K 2700K P1 30K 3000K P2 35K 3500K 40K 4000K 50K 5000K	80CRI 90CRI	VF Visual comfort forward throw VW Visual comfort wide	MVOLT 347*	Shipped included SRM Surface mounting bracket ICW Indirect Canopy/Ceiling Washer bracket (dry/damp locations only)† Shipped separately AWS 3/8inch Architectural wall spacer † PBBW Surface-mounted back box (top, left, right conduit entry) Use when there is no junction box available.†

Options		Finish	
E4WH	Emergency battery backup, Certified in CA Title 20 MAEDBS (4W, 0°C min)†	DDBXD	Dark bronze
PE	Photocell, Button type†	DBLXD	Black
DS	Dual switching (comes with 2 drivers and 2 light engines; see page 3 for details)†	DNATD	Natural aluminum
DWG	0-10V dimming wires pulled outside fixture (for use with an external control, ordered separately)	DWHGD	Textured white
BCE	Bottom conduit entry for back box (PBBW). Total of 4 entry points.	DSSTD	Sandstone
DSLE	Dual Switching (1 Driver, 2 Light Engines)		
CCE	Coastal Construction*		

LITHONIA LIGHTING COMMERCIAL OUTDOOR One Lithonia Way • Conyers, Georgia 30012 • Phone: 1-800-705-SERV (7378) • www.lithonia.com
© 2019-2025 Acuity Brands Lighting, Inc. All rights reserved.
WDGE1 LED Rev. 04/02/25

Beam 3 | Recessed mount

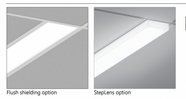
Flush shielding option

StepLens option

Declare. LBC Red List Free Living Building Challenge Materials Net Positive Water Energy Beauty Health Place Equity Imperative Declare Label

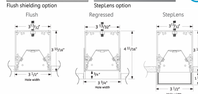

Project

Type: F3

Notes

PERFORMANCE PER LINEAR FOOT AT 3500K

NOMINAL LUMEN OUTPUT	INPUT WATTS*	EFFICACY	SHIELDING
1100 lm/ft	8.8 W/ft	125 lm/W	FL
1100 lm/ft	8.4 W/ft	125 lm/W	RG
1100 lm/ft	9.7 W/ft	114 lm/W	UB
1100 lm/ft	8.6 W/ft	128 lm/W	D2SG
1100 lm/ft	8.4 W/ft	131 lm/W	1.25M
1100 lm/ft	8.4 W/ft	131 lm/W	1.25P
1100 lm/ft	9.1 W/ft	122 lm/W	BW
1100 lm/ft	8.9 W/ft	124 lm/W	RFA
1000 lm/ft	9.5 W/ft	112 lm/W	NW
1000 lm/ft	9.4 W/ft	113 lm/W	ASO
1000 lm/ft	9.3 W/ft	114 lm/W	GZ
1000 lm/ft	9.4 W/ft	113 lm/W	WW

Please consult factory for custom lumen output and wattage.

Ordering Guide

BMRLED

PRODUCT ID	NOML LUMENS/FT	CRI	COLOR TEMP (choose one)	SHIELDING	LENGTH
BMRLED Recessed LED	300 300 lm/ft - min 1000 1000 lm/ft - max for GZ, NW, WW, ASO†,* 1100 1100 lm/ft - max	80 80 CRI* 90 90 CRI*	27 2700 K 30 3000 K 35 3500 K 40 4000 K B30 3000 K - BIOS* B35 3500 K - BIOS* B40 4000 K - BIOS*	FL flush* RG regressed* D2SG 0.25" Dia lens* 1.25M 1.25" StepLens, lum. end cap* 1.25P 1.25" StepLens, opaque end cap* UB Ultra blend lens** ASO - asymmetric, flush only BW batwing, flush only NW narrow, flush only GZ graze, flush only WW wallwash, flush only RFA room fill asymmetric	2 2' 3 3' 4 4' 5 5' 6 6' 8 8' 12 12' XXU *SPECIAL SIZE*

Outputs between listed min and max are available.
* 1000 lm/ft max. only for GZ, NW, WW and ASO. Consult factory for outputs outside of the listed range.
Consult factory for max output with BIOS.

* Not available with BIOS.

Consult Acuity technical sheet for more information of color technology.
*Consult BIOS guide for more information on BIOS technology.

*Lens options use spotless lens. See page 5 for more information.
** Default lens for tunable white and BIOS. Consult factory for other lens.

MR (OPTIONAL)	FINISH	VOLTAGE	DRIVER	CIRCUITS
M16LED(F/P) M16 LED lamp - Low voltage (by others)*	W white	120 120 V	DP dimming (0-10V) 1%	1 1 circuit
M16LED(B/P) M16 LED lamp - Dimmable (provided)**	BLK black	277 277 V	LT(P) Lutron*	2 2 circuits
	C custom	347 347 V	BI bi-level dimming	+E(P) emergency circuit*
		UNV universal	OO(P) other**	+NLTG night light circuit*
		DC low voltage*	DPB(STC) dimming (0-10V) 1% with BOS*	+GTD(P) generator transfer device*
			DPB(DTN) Bio-dimming** 100%-81% with BOS*	+LDK LED downlight insert
			TW(P) tunable white drivers*	
			POE(P) POE drivers*	

*Specify quantity. Available with 120V or 277V only. Low wattage only. Separate circuits included
**Consult factory. See page 6 for more details. Available with UNV, 120V or 277V only. NTA constant wattage 10W, 15W, 20W
Available in 3500K & 4000K
Available in luminaires with Autune and BOS but downlight modules will not be tunable white or BIOS LEDs

*Only available with POE drivers.

*Specify system
**Please consult factory, see page 2

*Specify quantity

MOUNTING	BATTERY (OPTIONAL)	OTHER (OPTIONAL)	IC CONTROLS (OPT.)	CUSTOM (OPT.)
T89 t-bar 9/16" T815 t-bar 15/16" ST screw slot t-bar TG9 tegular 9/16" TG15 tegular 15/16" DF drywall flange D drywall flangeless DB slip-through bracket DS drywall spackle flange TX ts Hunter Douglas techstyle*	B(P) battery pack 4' sections	EF end feed FW flex whip (4' std)* CP Chicago plenum HO hold-down clip** AR air-return plate*** SR sprinkler plate*** SPK speaker plate***	DS(P) Daylight sensor OS(P) occupancy sensor DOS(P) Daylight & occupancy sensor WC(P) wireless control dimming	C custom
*TX available with flush lens only	Not available with 347V. Please consult factory	*Other lengths available; please consult factory. **Only available for t-bar mounting ***Please consult factory	Specify quantity. Requires 8" blank. See integrated controls guide for more details. Consult factory for Tunable White. Not available with DPB (DYN) driven for BOS with Dynamic Spectrum.	Please specify

Product design and development is an ongoing process at Axis Lighting. We reserve the right to change specifications. Contact Axis for the latest product information.

1 / 12
July 10, 2025

FILE NAME:BMR.LED.B3.SPEC

© 2018 Axis Lighting Inc.
1.800.263.2947
(T) 514.948.6272

axis lighting axislighting.com

GREENHECK
Building Value in Air.

F2

Cut Sheet - Not for Submittal
Printed Date: 06/27/2025
Mark: EF-2
Model: SP-AP0511WL

Model: SP-AP0511WL
Ceiling Exhaust Fan

Standard Construction Features:

- Painted steel housing - White non-yellowing grille - Round outlet duct collar with integral backdraft damper - Forward curved wheel - Plug type disconnect - Adj. mounting brackets - Customizable high speed (50-80-110 CFM)

Selected Options & Accessories:

Constant CFM EC Motor rated for continuous use
Fully adjustable integrated minimum ventilation controller
UL/cUL 507 Listed - Electric Fan
LED, 10W with Frosted Lens, 750 lumens, 3000k color temperature, dimmable
Roof Cap, Curb Mounted, (PN: RCC-7) Shipped Loose
Motion Detector, Wall Mounted, (PN: 386339) Shipped Loose
Round Duct Connection 6, 5, or 4 inch universal duct connector
Integrated Humidity Sensor, PN: 386691, Shipped Loose
Adjustable easy installation mounting bracket
Energy Star Most Efficient
Lighted Grille
Polypropylene Wheel Material
Can Be Used to Comply with: ASHRAE 62.2 and Washington State Energy Code

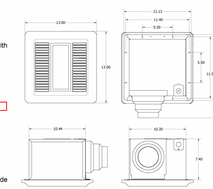

Dimensional	
Quantity	1
Weight w/o Acc's (lb)	10
Weight w/ Acc's (lb)	18
Weight w/ Acc's and Curb (lb)	38

Performance	
Requested Volume (CFM)	50
Actual Volume (CFM)	50
Total External SP (in. wg)	0.25
Fan RPM	829
* FLA (A)	0.29
Elevation (ft)	325
Airstream Temp.(F)	70
Air Density (lbr/ft3)	0.074
Sones	0.7

Motor	
Motor Mounted	Yes
** Input Watts (W)	9
Voltage/Cycle/Phase	115/60/1
Enclosure	TEAO

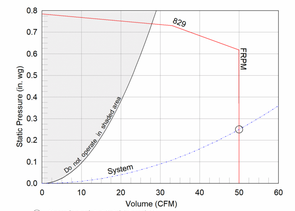

Notes:
All dimensions shown are in units of in.
*FLA is approximate and will vary slightly with the motor.
Sones - calculated using AMCA 301 at 0.ft
** Wattage is shown at free air.
** Wattage is approximate and may vary between motors.
* HVI certified for .1", .25", and .375" of SP.

HVI CERTIFIED

CAPS 4.47.1071

F:\Caps\Jobs\bmusich\IDS\POLA TMSF - IDS Group.gfcj
Generated by: bmusich@nswcla.com

Page 7 of 12

Project		Catalog #		Type	F1
Prepared by		Notes		Date	



Fail-Safe
Vaportite LED

8' Tamper Resistant LED Vaportite

Typical Applications
Parking Garage • Cold Storage • Canopy • Warehouse • Food Processing • Manufacturing • Complex Environments

Interactive Menu
- Order Information page 2
- Photometric Data page 2
- Product Warranty

Product Certification
cULus Rated RoHS Compliant IP65 NSF ISTEP

Product Features
LINEAR DISCONNECT Integrated quick, safe and convenient means of connecting and disconnecting power ARC location 1 YEAR 5 YEAR

Top Product Features
- 2ft, 4ft, and 8ft Sealed and Gasketed Tamper Resistant Vaportite
- Lumen packages up to 22K lumens
- High-Performance efficacy up to 150 LPW
- LEDs available in 3500K, 4000K and 5000K at 80 CRI
- Rated for -40c to 35c ambient
- Options to meet Buy American and other domestic preference requirements

Dimensional and Mounting Details

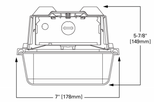

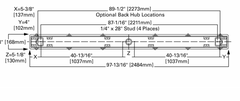

Installation Data


MOUNTING BRACKETS
Furnished
Two per 2' and 4' Unit
Four per 8' Unit


OPTIONAL CHAIN HANGING SET
(VTZ-CHAIN/SET-U)
Includes 6 ft. of chain, 4 large S-Hooks and 4 small S-Hooks
Two (2) Kits Recommended For 8' Fixture

COOPER Lighting Solutions

PSS193746EN page 1
March 25, 2025 1:06 PM

LITHONIA LIGHTING

Catalog Number

Notes

Type: F5

LED Linear

CLX

24", 36", 48" and 96" Lengths

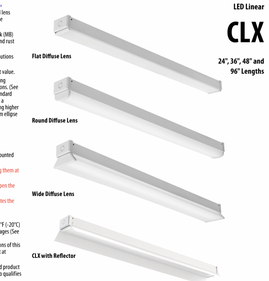

FEATURES & SPECIFICATIONS

INTENDED USE — The CLX is a linear lighting solution that is available in multiple lengths, lumen packages and distributions. Designed for versatility, the CLX can address virtually any indoor lighting need. The CLX is also offered in standard and high efficacy configurations and capable of being continuous row mounted or installed as a stand-alone fixture. Ideal for uptight and downlight in commercial, retail, manufacturing, warehouse, and display applications. **Certain airborne contaminants can diminish the integrity of acrylic and polycarbonate. Click here for Acrylic-Polycarbonate Compatibility table for suitable uses.**

CONSTRUCTION — Channel and cover are formed from code-gauge cold-rolled steel. Housing and lens endcaps are injection molded plastic to provide a more architectural look and feel. The endcaps come standard with a 7/8" knock out for continuous mounting but can be ordered without.

Finish: Paint options include high-gloss, baked white polyester (WH), galvanized (GALV), matte black (MB) and smoke gray (SKGY). Five-stage iron phosphate pre-treatment ensures superior paint adhesion and rust resistance.

OPTICS — Offered with acrylic lens and lens less configurations. Provides a choice of optical distributions including, wide, narrow, and axial.

Models with wide diffuse lens provide up to 12% uplight. Please check the IES file for specific uplight value.

ELECTRICAL — Utilizes high-output LEDs integrated on a two-layer circuit board, ensuring cool-running operation. Optional internal pluggable wiring harness for reduced labor cost in new mounting applications. *See PLR_ ordering information on page 9.) Electronic LED driver is multi-volt input and 0-10V dimming standard (see Operational Data on page 6 for actual wattage consumption). This fixture is designed to withstand a maximum line surge of 2.5kA at 0.75kA combination wave for indoor locations, for applications requiring higher level of protection additional surge protection must be provided. Color Variation within 1-step MacAdam ellipse (2SDCM).

L70>100,000 hours at 25˚C.

LEDs provide nominal 80 CRI or 90 CRI at 3000 K, 3500 K,4000 K, or 5000 K.

Lumen output up to 2,500 lumens per foot.

INSTALLATION — Fixture may be ceiling or wall mounted (with or without THCLX hanger or angle mounted with CLEANGRBKT), pendant or stem mounted with appropriate mounting options.

WARNING — Removing the lens and opening the fixture during installation exposes the LEDs, putting them at risk for damage.

If you plan to surface mount the fixture, we recommend using the THCLX. This eliminates the need to open the fixture.

If you plan to continuous row mount, we recommend using the PLR-wiring harness option. This eliminates the need to open the fixture.

Damage to the LEDs caused during installation will not be covered under the warranty.

LISTINGS — CSA certified to US and Canadian safety standards. For use in damp locations between -4°F (-20°C) and 104°F (40°C). Optional High Ambient (HA) ranging to 122°F(50°C) available on certain lumen packages (See ambient temperature chart for additional information).

DesignLights Consortium® (DLC) Premium qualified product and DLC qualified product. Not all versions of this product may be DLC Premium qualified or DLC qualified. Please check the DLC Qualified Products List at www.designlights.org/QPL to confirm which versions are qualified.

GOVERNMENT PROCUREMENT — BAA – Product with the BAA option qualifies as a domestic end product under the Buy American Act as implemented in the FAR and DFARS. Product with the BAA option also qualifies as manufactured in the United States under DOT Buy America regulations.
BABA – Build America Buy America: Product with the BAA option also qualifies as produced in the United States under the definitions of the Build America, Buy America Act.
Please refer to www.acuitybrands.com/buy-american for additional information.

WARRANTY — 5-year limited warranty. This is the only warranty provided and no other statements in this specification sheet create any warranty of any kind. All other express and implied warranties are disclaimed. Complete warranty terms located at: www.acuitybrands.com/support/warranty/terms-and-conditions

Note: Actual performance may differ as a result of end-user environment and application.
All values are design or typical values, measured under laboratory conditions at 25 °C.
Specifications subject to change without notice.

Stock configurations are offered for shorter lead times:

Stock Part Number	UPC
CLX L48 3000LM SEF FDL MVOLT GZ10 40K 80CRI WH	00193725325816
CLX L48 3000LM SEF FDL MVOLT GZ10 50K 80CRI WH	00193725325885
CLX L48 5000LM SEF FDL MVOLT GZ10 40K 80CRI WH	00193725325939
CLX L48 5000LM SEF FDL MVOLT GZ10 50K 80CRI WH	00193725325908
CLX L96 6000LM SEF FDL MVOLT GZ10 40K 80CRI WH	00193725325861
CLX L96 6000LM SEF FDL MVOLT GZ10 50K 80CRI WH	00193725325953
CLX L96 10000LM SEF FDL MVOLT GZ10 40K 80CRI WH	00193725325922
CLX L96 10000LM SEF FDL MVOLT GZ10 50K 80CRI WH	00193725325830
CLX L48 3000LM SEF RDL MVOLT GZ10 40K 80CRI WH	00193725325960
CLX L48 3000LM SEF RDL MVOLT GZ10 50K 80CRI WH	00193725325892
CLX L48 5000LM SEF RDL MVOLT GZ10 40K 80CRI WH	00193725325854
CLX L48 5000LM SEF RDL MVOLT GZ10 50K 80CRI WH	00193725325946
CLX L96 6000LM SEF RDL MVOLT GZ10 40K 80CRI WH	00193725325878
CLX L96 6000LM SEF RDL MVOLT GZ10 50K 80CRI WH	00193725325823
CLX L96 10000LM SEF RDL MVOLT GZ10 40K 80CRI WH	00193725325953
CLX L96 10000LM SEF RDL MVOLT GZ10 50K 80CRI WH	00193725325847

Capable Luminaire
This item is an A+ capable luminaire, which has been designed and tested to provide consistent color appearance and out-of-the-box control compatibility with simple commissioning when used with Acuity Brands controls products.
All configurations of this luminaire are calibrated and tested to meet the Acuity Brands' specifications for chromatic consistency – including color rendering, color fidelity, and color temperature tolerance around standard CIE chromaticity coordinates.
To learn more about Acuity A+ standards, specifications, and testing visit www.acuitybrands.com/aplus.

design select
Items marked by a shaded background qualify for the Design Select program and ship in 15 days or less. To learn more about Design Select, visit www.acuitybrands.com/designselect. *See ordering tree for details

COMMERCIAL INDOOR

CLX
Page 1 of 10

CLX LED Linear

Design Select options indicated by this color background.

ORDERING INFORMATION Lead times will vary depending on options selected. Consult with your sales representative.

Example: CLX L48 5000LM SEF WDL MVOLT GZ10 40K 80CRI WH

Series	Length	Nominal lumens	Performance package	Louver	Lens
CLX LED linear	L24 24"	1500LM 1,500 lumens 2000LM 2,000 lumens 2500LM 2,500 lumens 3500LM 3,500 lumens 4500LM 4,500 lumens 5000LM 5,000 lumens	SEF Standard efficiency †	(Blank) Less louver	LL/Less Less lens
	L36 36"	2250LM 2,250 lumens 3000LM 3,000 lumens 3750LM 3,750 lumens 5250LM 5,250 lumens 6750LM 6,750 lumens 7500LM 7,500 lumens	HEF Premium efficiency †	SBLW Straight blade louver, white † SBLMB Straight blade louver, matte black † SBLGV Straight blade louver, galvanized † SBLSMGY Straight blade louver, smoke gray †	FDL Flat diffuse † RDL Round diffuse † WDL Wide diffuse †
	L48 48"	3000LM 3,000 lumens 4000LM 4,000 lumens 5000LM 5,000 lumens 7000LM 7,000 lumens 9000LM 9,000 lumens 10000LM 10,000 lumens			
	L96 96"	6000LM 6,000 lumens 8000LM 8,000 lumens 10000LM 10,000 lumens 14000LM 14,000 lumens 18000LM 18,000 lumens 20000LM 20,000 lumens			

Distribution	Voltage	Driver	Glare Reflector	Color temperature	Colorizing rendering index
(Blank) General ND Narrow † WD Wide † AXD Axial, 24" off center †	MVOLT (120-277 V) † 120 120V 208 208V † 240 240V †	27 27K 347 347V † 480 480V †	G21 Generic 0-10V, dims to 1% † GZ10 Generic 0-10V, dims to 10% † EZ1 eldoLED 0-10V, dims to 1% †	(blank) No reflectors LGR Reflectors for additional glare reduction †	80CRI 80 CRI 90CRI 90 CRI

Options		Finish	
E10W 10W Emergency battery pack, constant power. Certified in CA Title 20 MAEDBS. Over selectable Self-Diagnostic, AC Activate with Integral Test Switch † (347 †)	PLR___ Plug-in wiring, see page 9 for ordering information PLR1G Plug-in wiring, single circuit, Ground PLR1VG Plug-in wiring, single circuit, low-voltage dimming, Ground †	nLight® Wired: W100 nLight® without lumen management W100EMG nLight® without lumen management† For use with generator supply EM power †	WH White GALVW Galvanized with white lens end caps GALVB Galvanized with black lens end caps
E10WLSTAR Emergency battery pack, Enabled with LSTAR †	RRL___ RELOC® -ready luminaire. See page 10 for ordering information	NLS7	MB Matte black
BGTD Generator transfer device, not available with E10W †	SPD Surge protection device, provides up to 6kV protection †	NLSPDT7	SKGYW Smoke gray with white lens end caps
DCS 5", 18/3 Beltec selectable One Pass cable (fixture will bear dry location label) †	BAA Buy America(n) Act and/or Build America Buy America Qualified	NLS7ADCX	SKGYB Smoke gray with black lens end caps
HA High ambient, for use in ambient temperatures up to 50°C †	nLight® Wireless:	NLSPDT7ADCX	
EPMBD Decorative endplate, no knock out †	NLTAIR2 WES7 nLight AIR Generation 2-enabled PIR integral occupancy sensor with automatic dimming photocell †	NLSPDT7ADCX	
OUTCTR Wiring leads pulled through back center of fixture †	NLTAIR2 RESTEN nLight AIR Generation 2-enabled PIR integral occupancy sensor with automatic dimming photocell and ULTRA Emergency operation, via power interrupt detection †	Individual controls: †	
OUTEND Wiring leads pulled through end of fixture †	NLTAIR2 RESTPOT nLight AIR Generation 2-enabled dual technology integral occupancy sensor with automatic dimming photocell †	MSDT7 PIR integral occupancy sensor MSDPDT7 PDT 2 dual technology integral occupancy control	See Accessories and footnotes on next page
Cord Sets: †	NLTAIR2 RESTPOTEM nLight AIR Generation 2-enabled dual technology integral occupancy sensor with automatic dimming photocell and ULTRA Emergency operation, via power interrupt detection †	MSDPDT7ADC PDT integral occupancy sensor with automatic dimming control photocell	
CS18W 6' Straight blade plug, 120V †	NLTAIR2 BIO No sensor control †		
CS2W NEMA twist-lock plug, 120V †	NLTAIR2 RIOEM No sensor, Control Input function only and ULTRA Emergency operation, via power interrupt detection †		
CS7W Staight blade plug, 277V †			
CS15W NEMA twist-lock plug, 277V †			
CS25W NEMA twist-lock plug, 347V †			
CS97W NEMA twist-lock plug, 480V †			
CS8W 600W SEDONA white cord, no plug (no voltage required) †			
CSOWG16STOMOSD 6' white cord, 16/5, no plug, includes low voltage dimming wires (no voltage required) †			

LITHONIA LIGHTING CLX

COMMERCIAL INDOOR 1 Acuity Way, Decatur, GA 30035 Phone: 800-705-SERV (7378) TechSupport-LightingAcuityBrands.com www.lithonia.com
© 2018-2025 Acuity Brands Lighting, Inc. All rights reserved.
Rev. 07/16/25
Page 2 of 10

Catalog Number	
Notes	
Type	F5

LED Linear

CLX

24", 36", 48" and 96" Lengths

FEATURES & SPECIFICATIONS

INTENDED USE — The CLX is a linear lighting solution that is available in multiple lengths, lumen packages and distributions. Designed for versatility, the CLX can address virtually any indoor lighting need. The CLX is also offered in standard and high efficacy configurations and capable of being continuous row mounted or installed as a stand-alone fixture. Ideal for uptight and downlight in commercial, retail, manufacturing, warehouse, and display applications. **Certain airborne contaminants can diminish the integrity of acrylic and polycarbonate. Click here for Acrylic-Polycarbonate Compatibility table for suitable uses.**

CONSTRUCTION — Channel and cover are formed from code-gauge cold-rolled steel. Housing and lens endcaps are injection molded plastic to provide a more architectural look and feel. The endcaps come standard with a 7/8" knock out for continuous mounting but can be ordered without.

Finish: Paint options include high-gloss, baked white polyester (WH), galvanized (GALV), matte black (MB) and smoke gray (SKGY). Five-stage iron phosphate pre-treatment ensures superior paint adhesion and rust resistance.

OPTICS — Offered with acrylic lens and lens less configurations. Provides a choice of optical distributions including, wide, narrow, and axial.

Models with wide diffuse lens provide up to 12% uplight. Please check the IES file for specific uplight value.

ELECTRICAL — Utilizes high-output LEDs integrated on a two-layer circuit board, ensuring cool-running operation. Optional internal pluggable wiring harness for reduced labor cost in new mounting applications. *See PLR_ ordering information on page 9.) Electronic LED driver is multi-volt input and 0-10V dimming standard (see Operational Data on page 6 for actual wattage consumption). This fixture is designed to withstand a maximum line surge of 2.5kA at 0.75kA combination wave for indoor locations, for applications requiring higher level of protection additional surge protection must be provided. Color Variation within 1-step MacAdam ellipse (2SDCM).

L70>100,000 hours at 25˚C.

LEDs provide nominal 80 CRI or 90 CRI at 3000 K, 3500 K,4000 K, or 5000 K.

Lumen output up to 2,500 lumens per foot.

INSTALLATION — Fixture may be ceiling or wall mounted (with or without THCLX hanger or angle mounted with CLEANGRBKT), pendant or stem mounted with appropriate mounting options.

WARNING — Removing the lens and opening the fixture during installation exposes the LEDs, putting them at risk for damage.

If you plan to surface mount the fixture, we recommend using the THCLX. This eliminates the need to open the fixture.

If you plan to continuous row mount, we recommend using the PLR-wiring harness option. This eliminates the need to open the fixture.

Damage to the LEDs caused during installation will not be covered under the warranty.

LISTINGS — CSA certified to US and Canadian safety standards. For use in damp locations between -4°F (-20°C) and 104°F (40°C). Optional High Ambient (HA) ranging to 122°F(50°C) available on certain lumen packages (See ambient temperature chart for additional information).

DesignLights Consortium® (DLC) Premium qualified product and DLC qualified product. Not all versions of this product may be DLC Premium qualified or DLC qualified. Please check the DLC Qualified Products List at www.designlights.org/QPL to confirm which versions are qualified.

GOVERNMENT PROCUREMENT — BAA – Product with the BAA option qualifies as a domestic end product under the Buy American Act as implemented in the FAR and DFARS. Product with the BAA option also qualifies as manufactured in the United States under DOT Buy America regulations.
BABA – Build America Buy America: Product with the BAA option also qualifies as produced in the United States under the definitions of the Build America, Buy America Act.
Please refer to www.acuitybrands.com/buy-american for additional information.

WARRANTY — 5-year limited warranty. This is the only warranty provided and no other statements in this specification sheet create any warranty of any kind. All other express and implied warranties are disclaimed. Complete warranty terms located at: www.acuitybrands.com/support/warranty/terms-and-conditions

Note: Actual performance may differ as a result of end-user environment and application.
All values are design or typical values, measured under laboratory conditions at 25 °C.
Specifications subject to change without notice.

Stock configurations are offered for shorter lead times:

Stock Part Number	UPC
CLX L48 3000LM SEF FDL MVOLT GZ10 40K 80CRI WH	00193725325816
CLX L48 3000LM SEF FDL MVOLT GZ10 50K 80CRI WH	00193725325885
CLX L48 5000LM SEF FDL MVOLT GZ10 40K 80CRI WH	00193725325939
CLX L48 5000LM SEF FDL MVOLT GZ10 50K 80CRI WH	00193725325908
CLX L96 6000LM SEF FDL MVOLT GZ10 40K 80CRI WH	00193725325861
CLX L96 6000LM SEF FDL MVOLT GZ10 50K 80CRI WH	00193725325953
CLX L96 10000LM SEF FDL MVOLT GZ10 40K 80CRI WH	00193725325922
CLX L96 10000LM SEF FDL MVOLT GZ10 50K 80CRI WH	00193725325830
CLX L48 3000LM SEF RDL MVOLT GZ10 40K 80CRI WH	00193725325960
CLX L48 3000LM SEF RDL MVOLT GZ10 50K 80CRI WH	00193725325892
CLX L48 5000LM SEF RDL MVOLT GZ10 40K 80CRI WH	00193725325854
CLX L48 5000LM SEF RDL MVOLT GZ10 50K 80CRI WH	00193725325946
CLX L96 6000LM SEF RDL MVOLT GZ10 40K 80CRI WH	00193725325878
CLX L96 6000LM SEF RDL MVOLT GZ10 50K 80CRI WH	00193725325823
CLX L96 10000LM SEF RDL MVOLT GZ10 40K 80CRI WH	00193725325953
CLX L96 10000LM SEF RDL MVOLT GZ10 50K 80CRI WH	00193725325847

Capable Luminaire
This item is an A+ capable luminaire, which has been designed and tested to provide consistent color appearance and out-of-the-box control compatibility with simple commissioning when used with Acuity Brands controls products.
All configurations of this luminaire are calibrated and tested to meet the Acuity Brands' specifications for chromatic consistency – including color rendering, color fidelity, and color temperature tolerance around standard CIE chromaticity coordinates.
To learn more about Acuity A+ standards, specifications, and testing visit www.acuitybrands.com/aplus.

design select
Items marked by a shaded background qualify for the Design Select program and ship in 15 days or less. To learn more about Design Select, visit www.acuitybrands.com/designselect. *See ordering tree for details

COMMERCIAL INDOOR

CLX
Page 1 of 10

Fail-Safe — 8' Tamper Resistant LED Vaportite

Order Information

SAMPLE ORDER NUMBER: **8VRVT2-LDS-9-DR-UNV-L840-CD1-WL-U**

Domestic Preferences	Series	Lamp Type	LED Lumens Output	Lens	Distribution	Voltage	Remote Emergency Enclosure
Domestic Preferences [1]	Series	Lamp Type	LED Lumens Output	Lens	Distribution	Voltage	Remote Emergency Enclosure
Blank Standard BAA Buy American Act TAA Trade Agreements Act	8VRVT2-ft Tamper Resistant Vaportite	1LDS-LED-L-S	9-9000 Lumens 18-18000 Lumens 22-22000 Lumens	08-Internal Prismatic Lens/15% DR High Impact Additive (8VRVT2 Only) Lens/100% DR High Impact Additive (8VRVT2 Only) Meets ETL DR High Impact Additive †	Blank Medium (Standard) W-Wide Distribution	UNV (120V-277V) 50/60hz 120-277	V1-RDM-EL-Emergency Installed, 760 lumens EL10W-10-watt, 120-277V emergency battery pack installed (9,000 lumen fixture only) ††

Notes
[1] Only product configurations with Domestic Preferences selected will be compliant with the Buy American Act of 1933 (Build or Trade Agreements Act of 1979). Please consult factory or see DOMESTIC PREFERENCE website for more information. Components shipped separately are not considered when under domestic preference requirements.

Notes
(1) Not available in wide distribution.

Notes
(2) EL must specify 120 or 277V only.

Lamps	Driver Type	Label	Options	Packaging	Accessories
Lamps	Driver Type	Label	Options	Packaging	Accessories (order separately) [1]
L835-3500K, LED L840-4000K LED L850-5000K LED L8262-Green 520nm LED L8439-Amber 590nm LED L863-Red 630nm LED	CD1-1 Dimming Driver (1,000 lumens max.) CD2-2 Dimming Drivers SLTD1-Fifth Light DALI SLTD2-Fifth Light 0-10 SLTD3-Fifth Light DALI	WL-Wire Location Label	SSL-Stainless Steel Latches TH

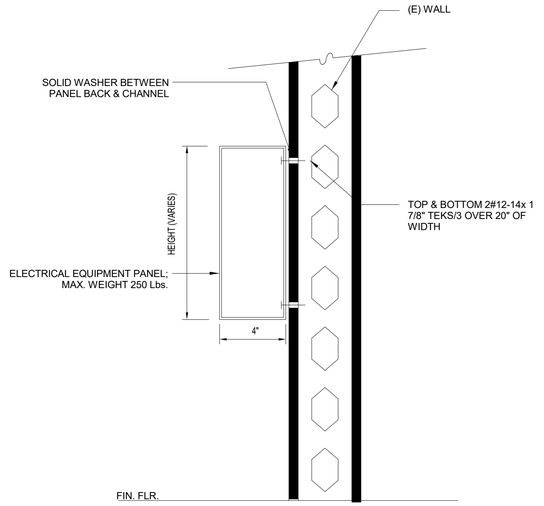

UNISTRUCT MOUNTING PANEL DETAIL | 2

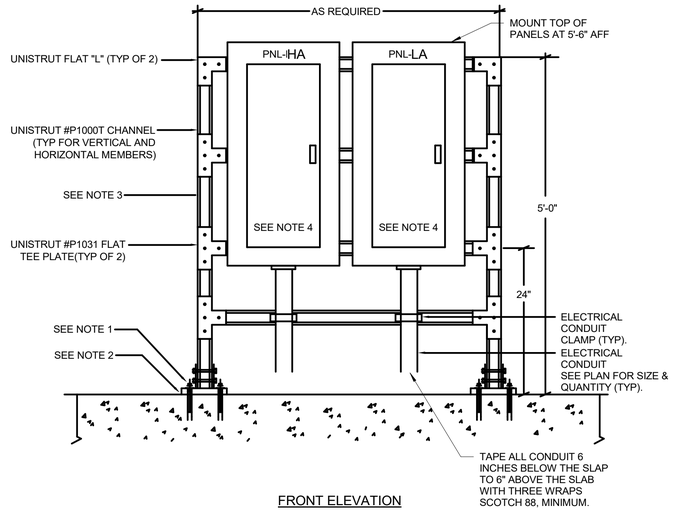

FRONT ELEVATION

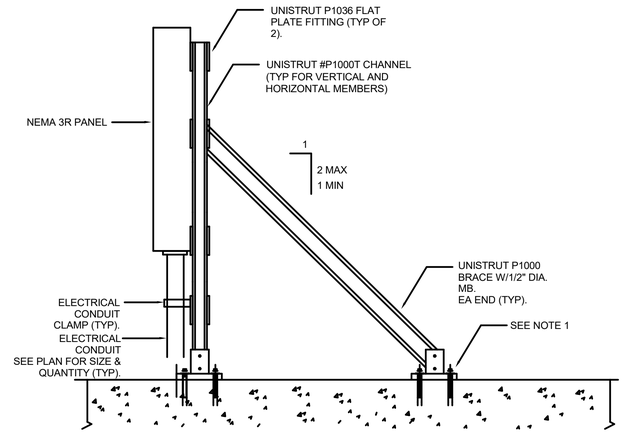

SIDE ELEVATION

1. PROVIDE/INSTALL UNISTRUT P2072A STEEL PLATE, FOR MOUNTING OF VERTICAL UNISTRUT, DND UNISTRUT BRACES, HOLE SPACINGS TO BE 6" EACH DIRECTION TYPICAL FOR TWO BASES.
2. PROVIDE/INSTALL (4) 1/2" DIA. HILTI KWIK BOLT TZ (STAINLESS STEEL) W/MIN. EMB. = 2", ICC-ESR #1917.
3. PROVIDE/INSTALL ALL UNISTRUT NUTS, STUD NUTS, SCREWS, WASHERS, LOCK WASHERS, ETC..., AS REQUIRED FOR MOUNTING OF ALL UNISTRUT CHANNELS AND PLATES, UNLESS NOTED OTHERWISE.
4. HEIGHT AS REQUIRED, VERIFY HEIGHT WITH EQUIPMENT MANUFACTURER.

UNISTRUCT MOUNTING PANEL DETAIL | 1

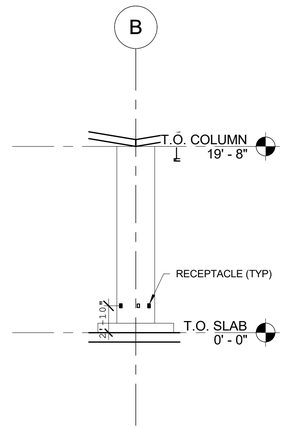

ELEVATION DETAIL - RECEPTACLE MOUNT | 4

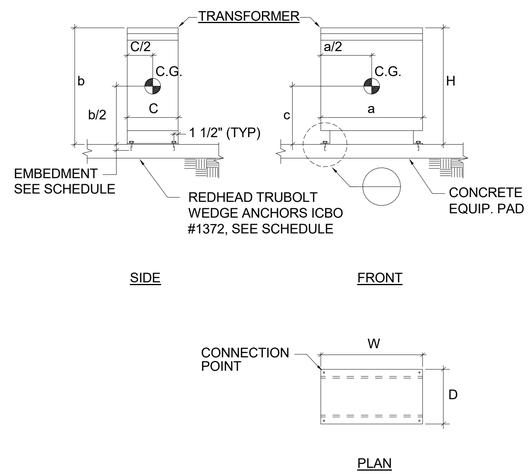

PLAN

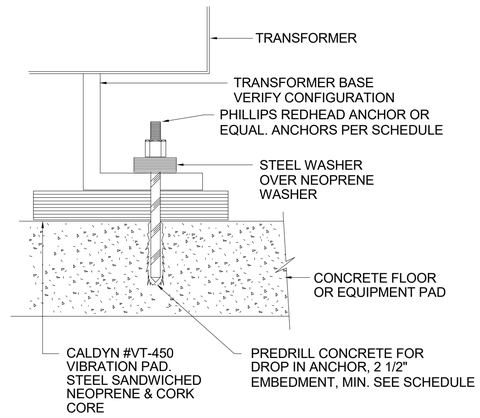

TRANSFORMER MOUNTING DETAIL | 3

NO.	DATE	DRAWN	REVISIONS -	CHK'D	APP'D
A	3/20/25	-	30 % CONCEPT DESIGN		
B	4/25/25	-	FINAL CONCEPT DESIGN		
C	7/18/25	-	40 % DESIGN		
D	9/16/25	-	80 % DESIGN		

NOT FOR CONSTRUCTION

NO.	DATE	DRAWN	REVISIONS -	CHK'D	APP'D

80% DESIGN REVIEW SEP 19, 2025

Jacobs
2600 MICHELSON DRIVE, SUITE 500
IRVINE, CA 92612
T: (949) 224-7500
F: (949) 224-7501
IDS GROUP
1 PETERS CANYON ROAD, SUITE 100
IRVINE CA 92606
TEL: 949-261-8500 FAX: 949-261-1550

REGISTERED PROFESSIONAL ENGINEER — ELECTRICAL — STATE OF CALIFORNIA — EXP.

SCALE:	AS SHOWN
DRAWN:	C. Gude
CHECKED:	S. Collins
DESIGNED:	M. Reed

ENGINEER / ARCHITECT

TERMINAL ISLAND MARITIME SUPPORT FACILITY

ELECTRICAL DETAILS

THE PORT OF LOS ANGELES
ENGINEERING DIVISION
425 S. PALOS VERDES STREET SAN PEDRO CA 90731-3309

DRAWING NUMBER	SHEET NUMBER
1-3513	AE-06

RVT: Autodesk Docs://05 CA_03377190_POLA TMSIP/1-3313-02S-11-E_Roadability Canopy_R25.rvt
DATE: 9/16/2025 7:47:09 PM

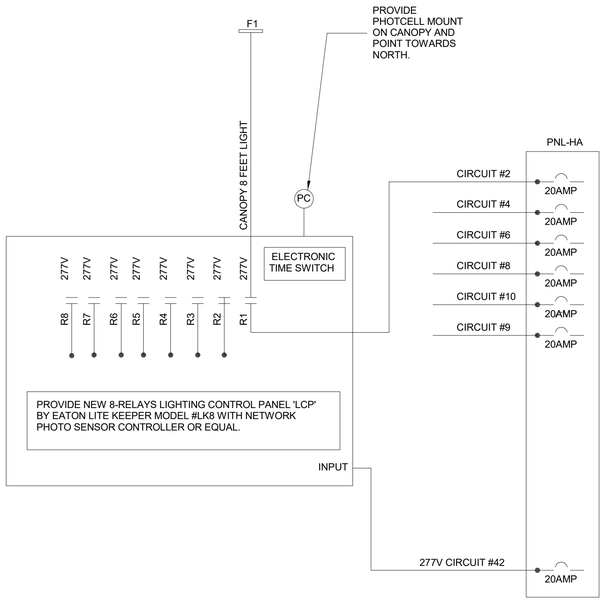

LIGHTING CONTROL OPERATION

RELAY #	PANEL	CIR #	VOLTS	SERVES	CONTROL
1	HA	1	277	CANOPY 8 FEET LED LIGHT	TIMECLOCK "ON", TIMECLOCK "OFF"
2					
3					
4					
5					
6					
7					
8					

ELEVATION DETAIL - RECEPTACLE MOUNT | 4

TRANSFORMER MOUNTING DETAIL | 3

NO.	DATE	DRAWN	REVISIONS -	CHK'D	APP'D
A	3/20/25	-	30 % CONCEPT DESIGN		
B	4/25/25	-	FINAL CONCEPT DESIGN		
C	7/18/25	-	40 % DESIGN		
D	9/16/25	-	80 % DESIGN		

NOT FOR CONSTRUCTION

NO.	DATE	DRAWN	REVISIONS -	CHK'D	APP'D

80% DESIGN REVIEW
SEP 19, 2025

Jacobs
2600 MICHELSON DRIVE, SUITE 500
IRVINE, CA 92612
T: (949) 224-7500
F: (949) 224-7501
IDS
IDS GROUP

REGISTERED PROFESSIONAL ENGINEER
EXP. _____
ELECTRICAL
STATE OF CALIFORNIA

SCALE: AS SHOWN
DRAWN: C. Gude
CHECKED: S. Collins
DESIGNED: M. Reed
ENGINEER / ARCHITECT

TERMINAL ISLAND MARITIME SUPPORT FACILITY

ELECTRICAL LIGHTING CONTROL DETAILS

THE PORT OF LOS ANGELES
ENGINEERING DIVISION
425 S. PALOS VERDES STREET SAN PEDRO CA 90731-3309

DRAWING NUMBER 1-3513

SHEET NUMBER AE-06A

RVT: Autodesk Docs://US CA_D3037190_PCOLA TIMSF/1-3513-IDS-11-E_Roastability Canopy_R25.rvt
DATE: 9/16/2025 7:47:09 PM

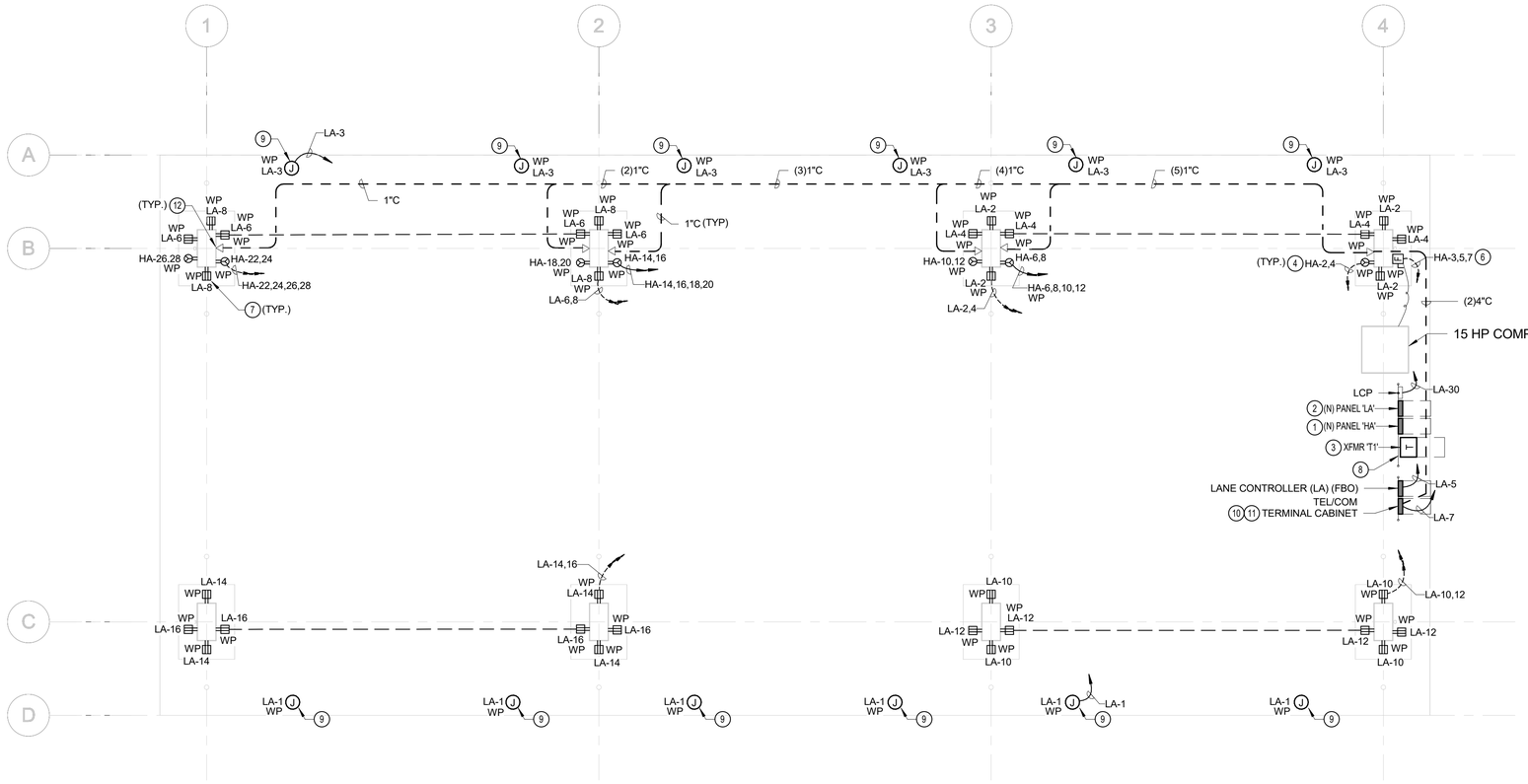

ELECTRICAL ROADABILITY CANOPY PLAN - POWER

1AE-07
AE-07

SCALE: 1/8" = 1'-0"

GENERAL NOTES

1.ALL ENCLOSURES SHALL BE 304 S.S.

2.ALL UNDERGROUND RACEWAYS SHALL BE SCHEDULE 40 PVC ENCASED ON CONCRETE.

3.ALL EXPOSED RACEWAY AND ASSOCIATED FITTINGS SHALL BE PVC COATED RMC.

4.ALL BUSSING SHALL BE COPPER.

5.ALL TRANSFORMER WINDINGS SHALL BE COPPER.

6.ALL GROUNDING MATERIALS SHALL BE COPPER.

7.ALL FEEDER AND BRANCH CIRCUIT WIRING SHALL BE XHHW-2 COPPER.

8.ALL HOME-RUN AND/OR BRANCH CIRCUIT WIRING FROM COLUMN-MOUNTED RECEPTACLES TO PANELBOARD SHALL BE INSTALLED UNDERGROUND FROM DEVICE LOCATION TO PANELBOARD.

9. ALL COLUMN-MOUNTED RECEPTACLES SHALL BE INSTALLED AT 48"AFG TYP UNLESS OTHERWISE NOTED.

10. REFER TO PANEL SCHEDULES FOR FEEDER AND BRANCH CIRCUIT CONDUCTOR AND RACEWAY REQUIREMENTS.

11. RECEPTACLES AND OUTLETS INDICATED ON PLAN SHALL BE PROVIDED WITH A WEATHERPROOF-WHILE-IN-USE COVER.

12. ALL RACEWAYS SHALL TERMINATE AT ENCLOSURES WITH WEATHERTIGHT FITTINGS.

13. RACEWAYS TERMINATED AT TRANSFORMERS AND SUSPENDED LIGHTING FIXTURES SHALL BE WITH LFMC IN LENGTHS NOT TO EXCEED 36".

KEY NOTES (#)

1. PROVIDE 125A, 480/277V, 3PH, 4W PANEL BOARD "HA". SEE SHEET AE-03 FOR MORE INFORMATION.
2. PROVIDE 60A, 208/120V, 3PH, 4W PANEL BOARD "LA". SEE SHEET AE-03 FOR MORE INFORMATION.
3. TRANSFORMER "T" , 15KVA, 480-208/120V , 3PH.
4. PROVIDE NEMA L8-30P, 30A/2P , 480V LOCKING TYPE RECEPTACLE WITH (2) #10 AND (1) #10 GND IN 3/4 "C. MOUNT TO STRUCTURE COLUMN. COORDINATE WITH EQUIPMENT FOR RECEPTACLE CONFIGURATION TYPE.
5. AIR COMPRESSOR PROVIDED BY PLUMBING. SEE DRAWINGS PL-03 AND PL-06.
6. PROVIDE NEMA 3R, 30A, 3P, 480V, FUSED DISCONNECT SWITCH. SIZE FUSE PER EQUIPMENT RECOMMEND. COORDINATE WITH EQUIPMENT FOR EXACT REQUIREMENTS.
7. PROVIDE GFCI, 120V, 20A, DUPLEX RECEPTACLE WITH WEATHER PROOF. HEAVY DUTY IN-USE COVER. MOUNT TO STRUCTURE COLUMN. REFER TO DETAIL 3 ON SHEET AE-06
8. EQUIPMENT TO BE MOUNT ON UNISTRUT, REFER TO DETAIL 1, 2 ON SHEET AE-06.
9. PROVIDE 120V POWER CONNECTION TO THE STOP AND GO INDICATOR LIGHTS. COORDINATE WITH EQUIPMENT FOR EXACT REQUIREMENTS.
10. TEL/COM TERMINAL CABINET, NEMA 3R, HINGED/LOCKABLE COVER, APPROX SIZE: 36" X 36" X 12".
11. TEL/COM OUTLET 4S BACKBOX, WEATHERPROOF WHILE-IN-USE COVER, 1"C.O. FROM BACKBOX UNDERGROUND TO TEL/COM TERMINAL CABINET, TERMINATE CONDUITS AT BOTH ENDS WITH CONDUIT INSULATING BUSHING.
12. PROVIDE VOICE/DATA OUTLET IN WEATHERPROOF OUTLET BOX SURFACE MOUNTED ON WORKBENCH. VERIFY EXACT LOCATION AND MOUNTING IN THE FIELD. ROUTE 1" DATA CONDUIT UNDERGROUND TO TELECOMMUNICATION PULLBOX.

NO.	DATE	DRAWN	REVISIONS -	CHK'D	APP'D
A	3/20/25	-	30 % CONCEPT DESIGN		
B	4/25/25	-	FINAL CONCEPT DESIGN		
C	7/18/25	-	40 % DESIGN		
D	9/16/25	-	80 % DESIGN		

NOT FOR CONSTRUCTION

NO.	DATE	DRAWN	REVISIONS -	CHK'D	APP'D

80% DESIGN REVIEW SEP 19, 2025

Jacobs
2600 MICHELSON DRIVE, SUITE 500
IRVINE, CA 92612
T: (949) 224-7500
F: (949) 224-7501
IDS GROUP
1 PETERS CANYON ROAD, SUITE 100
IRVINE, CA 92606
TEL: 949-660-9500 FAX: 949-387-0800

REGISTERED PROFESSIONAL ENGINEER — ELECTRICAL — STATE OF CALIFORNIA — EXP.

SCALE:	AS SHOWN
DRAWN:	C. Gude
CHECKED:	S. Collins
DESIGNED:	M. Reed
	ENGINEER / ARCHITECT

TERMINAL ISLAND MARITIME SUPPORT FACILITY

ELECTRICAL ROADABILITY CANOPY PLAN - POWER

THE PORT OF LOS ANGELES
ENGINEERING DIVISION
425 S. PALOS VERDES STREET SAN PEDRO CA 90731-3309

DRAWING NUMBER	SHEET NUMBER
1-3513	AE-07

RVT: Autodesk Docs://18 CA_03371901_POLA TMSIP1-3513-IDS-11-E_Roadability Canopy_R25.rvt
DATE: 9/19/2025 7:47:19 PM

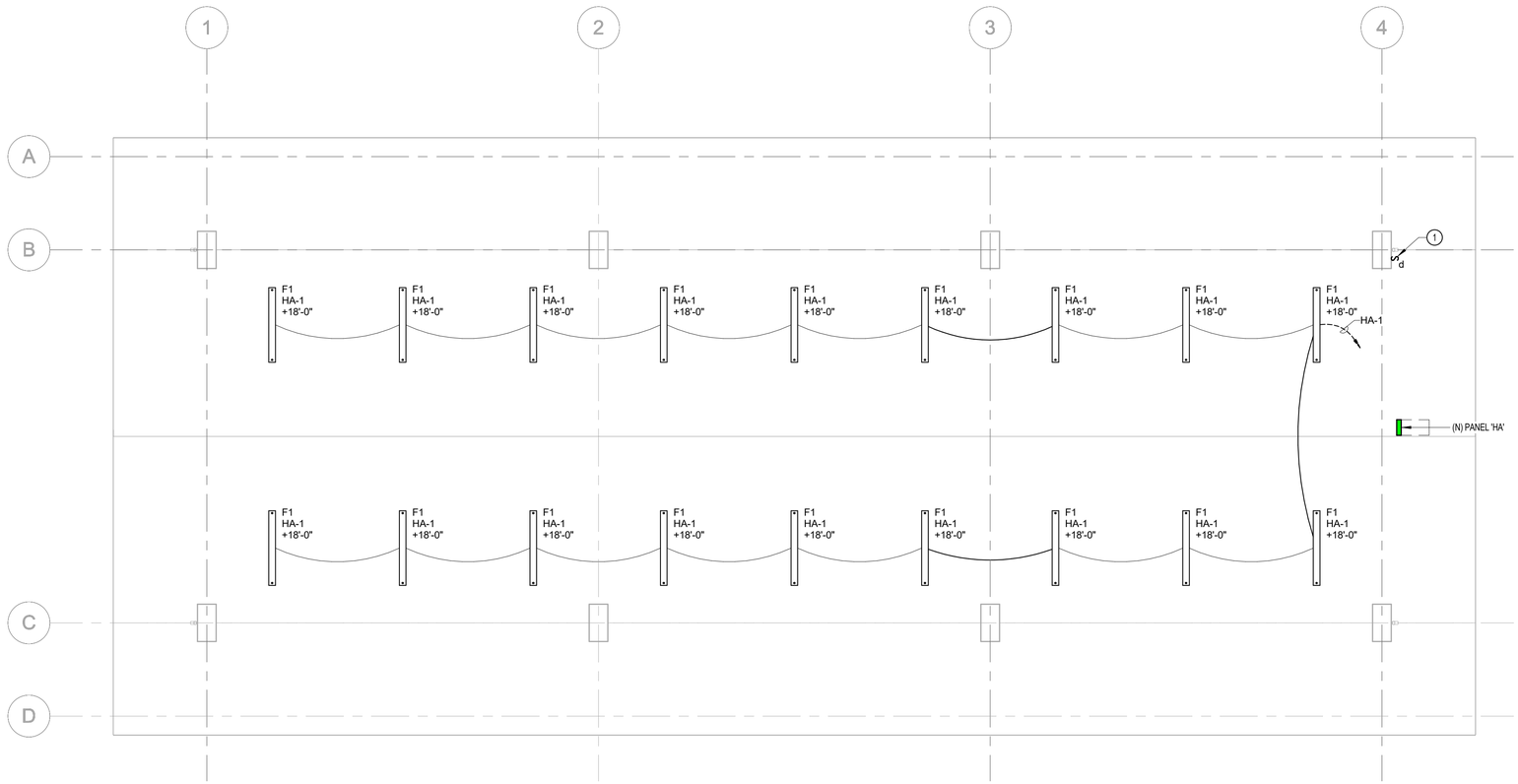

ELECTRICAL ROADABILITY CANOPY PLAN - LIGHTING

1AE-08
AE-08

SCALE: 1/8" = 1'-0"

KEY NOTES (#)

(1) PROVIDE KEY OPERATED LOCK SWITCH.

N

NO.	DATE	DRAWN	REVISIONS -	CHK'D	APP'D
A	3/20/25	-	30 % CONCEPT DESIGN		
B	4/25/25	-	FINAL CONCEPT DESIGN		
C	7/18/25	-	40 % DESIGN		
D	9/16/25	-	80 % DESIGN		

NOT FOR CONSTRUCTION

NO.	DATE	DRAWN	REVISIONS -	CHK'D	APP'D

80% DESIGN REVIEW
SEP 19, 2025

Jacobs
2600 MICHELSON DRIVE, SUITE 500
IRVINE, CA 92612
T: (949) 224-7500
F: (949) 224-7501

IDS
IDS GROUP
1 PETERS CANYON ROAD, SUITE 130
IRVINE, CA 92606
TEL: 949-261-8200 FAX: 949-261-0842

REGISTERED PROFESSIONAL ENGINEER
ELECTRICAL
EXP. _____
STATE OF CALIFORNIA

SCALE:	AS SHOWN
DRAWN:	C. Gude
CHECKED:	S. Collins
DESIGNED:	M. Reed

ENGINEER / ARCHITECT

TERMINAL ISLAND MARITIME SUPPORT FACILITY

ELECTRICAL ROADABILITY CANOPY PLAN - LIGHTING

THE PORT OF LOS ANGELES
ENGINEERING DIVISION
425 S. PALOS VERDES STREET SAN PEDRO CA 90731-3309

DRAWING NUMBER 1-3513

SHEET NUMBER AE-08

RVT: Autodesk Docs://US CA_03371901_POLA TIMSFI-1513-025-11-E_Roadability Canopy_R23.rvt
DATE: 9/19/2025 7:47:11 PM

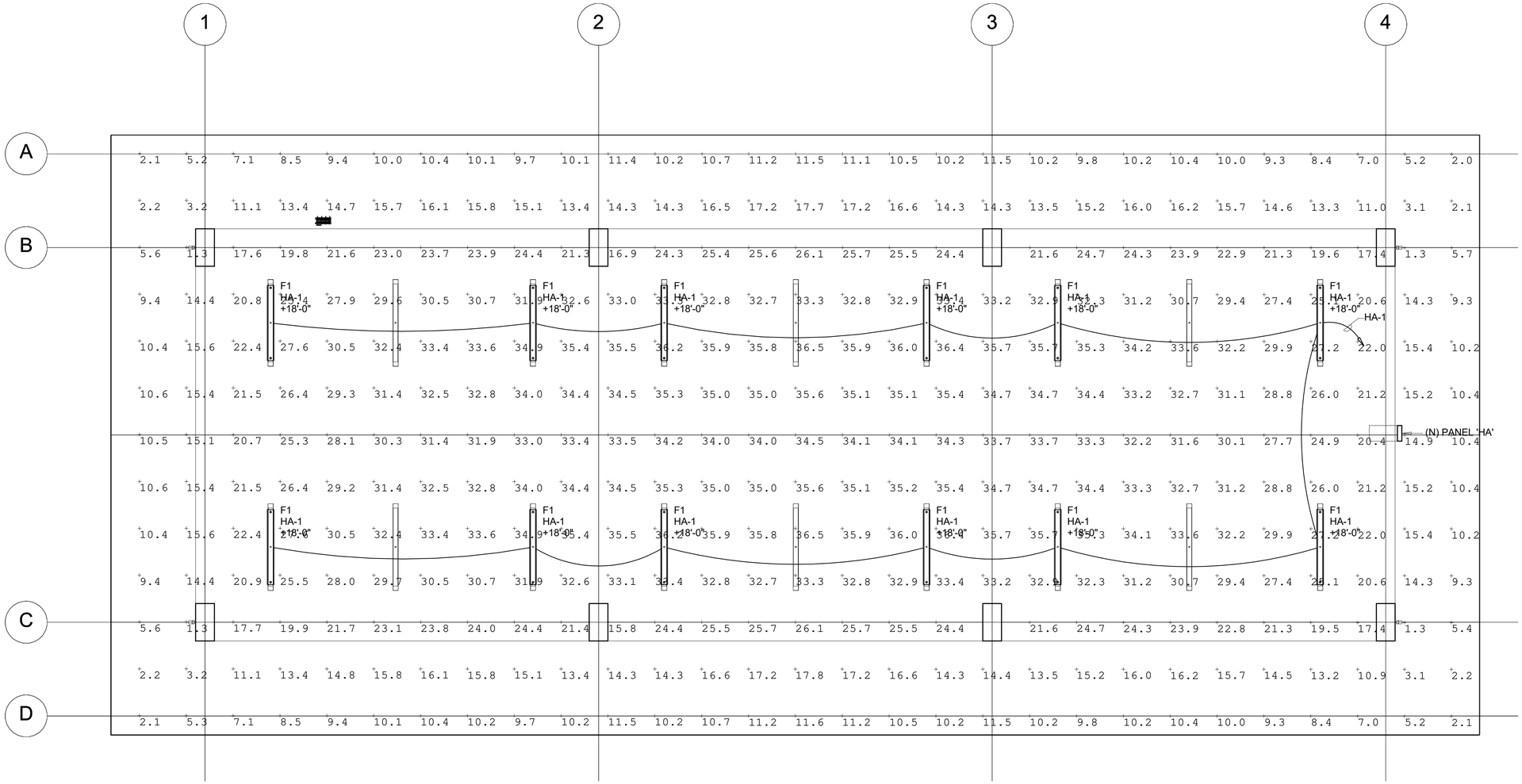

Luminaire Schedule						
Symbol	Qty	Description	Tag	LLF	Luminaire Watts	Total Watts
	18	8VRVT2-LD5-16-DR100-UNV-L840-CD2-WL-U	F1	0.810	117	2106

Calculation Summary						
Label	Units	Avg	Max	Min	Avg/Min	Max/Min
CANOPY PERIMETER	Fc	11.02	17.8	1.3	8.48	13.69
CANOPY WORK AREA	Fc	29.71	36.5	15.8	1.88	2.31

NO.	DATE	DRAWN	REVISIONS -	CHK'D	APP'D
A	3/20/25	-	30 % CONCEPT DESIGN		
B	4/25/25	-	FINAL CONCEPT DESIGN		
C	7/18/25	-	40 % DESIGN		
D	9/16/25	-	80 % DESIGN		

NOT FOR CONSTRUCTION

NO.	DATE	DRAWN	REVISIONS -	CHK'D	APP'D

80% DESIGN REVIEW
SEP 19, 2025

Jacobs
2600 MICHELSON DRIVE, SUITE 500
IRVINE, CA 92612
T: (949) 224-7500
F: (949) 224-7501
IDS
IDS GROUP
1 PETERS CANYON ROAD, SUITE 100
IRVINE, CA 92606
TEL: 949-387-9300 FAX: 949-387-9300

REGISTERED PROFESSIONAL ENGINEER
EXP.
ELECTRICAL
STATE OF CALIFORNIA

SCALE: AS SHOWN
DRAWN: C. Gude
CHECKED: S. Collins
DESIGNED: M. Reed
ENGINEER / ARCHITECT

TERMINAL ISLAND MARITIME SUPPORT FACILITY

ROADABILITY CANOPY PLAN - PHOTOMETRIC

THE PORT OF LOS ANGELES
ENGINEERING DIVISION
425 S. PALOS VERDES STREET SAN PEDRO CA 90731-3309

DRAWING NUMBER 1-3513
SHEET NUMBER AE-09

RVT: Autodesk Docs://US CA_D3371901_POLA TIMSF/1-3513-IDS-11-E_Roadability Canopy_R25.rvt
DATE: 9/18/2025 7:41:12 PM

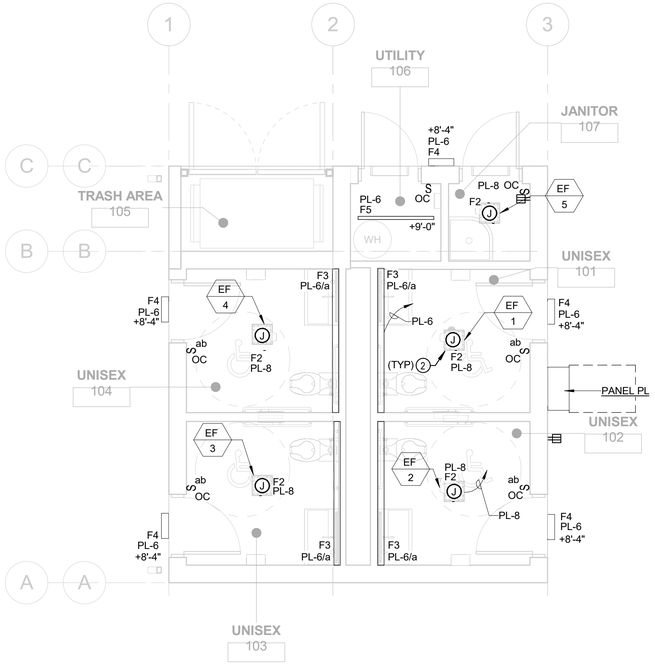

2AE-10 / AE-10 WASHROOM FLOOR PLAN - LIGHTING
SCALE: 1/4" = 1'-0"

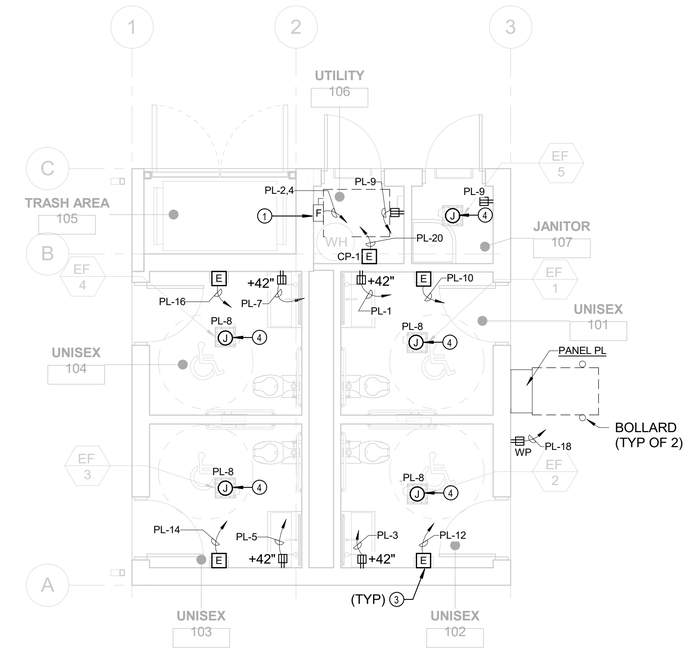

1AE-10 / AE-10 WASHROOM FLOOR PLAN - POWER
SCALE: 1/4" = 1'-0"

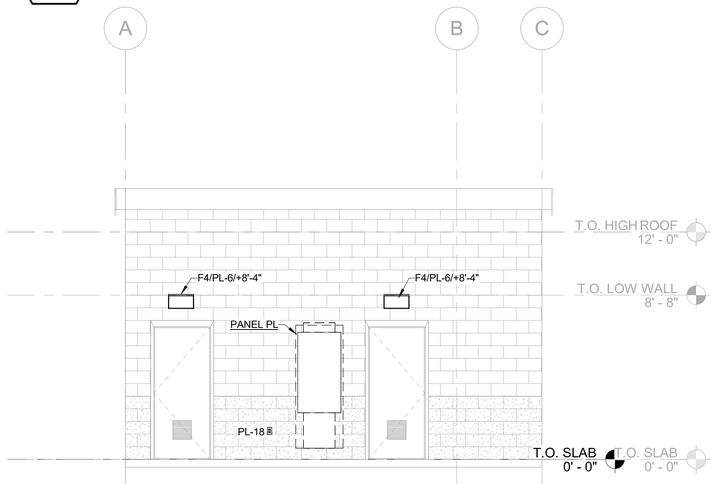

3AE-10 / AE-10 ELEVATION DETAIL - ELECTRICAL PANEL
SCALE: 1/4" = 1'-0"

N

GENERAL NOTES

1. ALL ENCLOSURES SHALL BE 304 S.S.
2. ALL UNDERGROUND RACEWAYS SHALL BE SCHEDULE 40 PVC ENCASED ON CONCRETE.
3. ALL EXPOSED RACEWAY AND ASSOCIATED FITTINGS SHALL BE PVC COATED RMC.
4. ALL BUSSING SHALL BE COPPER.
5. ALL TRANSFORMER WINDINGS SHALL BE COPPER.
6. ALL GROUNDING MATERIALS SHALL BE COPPER.
7. ALL FEEDER AND BRANCH CIRCUIT WIRING SHALL BE XHHW-2 COPPER.

KEY NOTES

1. PROVIDE 30A, 2P, 208V FUSED DISCONNECT SWITCH. SIZE FUSE PER EQUIPMENT RECOMMEND. COORDINATE WITH EQUIPMENT FOR EXACT REQUIREMENTS.
2. PROVIDE 120V J-BOX POWER CONNECTION TO FIXTURE F2. INTERNAL RECEPTACLE FURNISHED BY FIXTURE MANUFACTURER.
3. PROVIDE POWER CONNECTION TO HAND DRYER. COORDINATE WITH EQUIPMENT FOR EXACT REQUIREMENTS.
4. EXHAUST FAN CONTROLLED BY OCCUPANCY SENSOR; REFER TO LIGHTING PLANS

NO.	DATE	DRAWN	REVISIONS -	CHK'D	APP'D
A	3/20/25	-	30 % CONCEPT DESIGN		
B	4/25/25	-	FINAL CONCEPT DESIGN		
C	7/18/25	-	40 % DESIGN		
D	9/16/25	-	80 % DESIGN		

NOT FOR CONSTRUCTION

NO.	DATE	DRAWN	REVISIONS -	CHK'D	APP'D

80% DESIGN REVIEW
SEP 19, 2025

Jacobs
2600 MICHELSON DRIVE, SUITE 500
IRVINE, CA 92612
T: (949) 224-7500
F: (949) 224-7501
IDS
IDS GROUP

REGISTERED PROFESSIONAL ENGINEER
EXP.
ELECTRICAL
STATE OF CALIFORNIA

SCALE: AS SHOWN
DRAWN: C. Gude
CHECKED: S. Collins
DESIGNED: M. Reed
ENGINEER / ARCHITECT

TERMINAL ISLAND MARITIME SUPPORT FACILITY

ELECTRICAL FLOOR PLAN - WASHROOM

THE PORT OF LOS ANGELES
ENGINEERING DIVISION
425 S. PALOS VERDES STREET SAN PEDRO CA 90731-3309

DRAWING NUMBER 1-3513
SHEET NUMBER AE-10

RVT: Autodesk Docs://US CA_D3371901_POLA TIMSF/1-3513-IDS-11-E_WashRoom_R25.rvt
DATE: 9/18/2025 7:45:29 PM

STATE OF CALIFORNIA
Indoor Lighting
CALIFORNIA ENERGY COMMISSION

CERTIFICATE OF COMPLIANCE		NRCC-LTI-E
This document is used to demonstrate compliance with requirements in 110.9, 110.12(c), 130.0, 130.1, 140.6 and 141.0(b)2 for indoor lighting scopes using the prescriptive path for nonresidential and hotel/motel occupancies. It is also used to document compliance with requirements in 160.5, 170.2(e) and 180.2(b)4 for indoor lighting scopes using the prescriptive path for multifamily occupancies. Multifamily includes dormitory and senior living facilities.		
Project Name: TERMINAL ISLAND MARITIME SUPPORT FACILITY	**Report Page:**	**(Page 1 of 7)**
Project Address: 425 S. PALOS VERDES STREET	**Date Prepared:**	9/15/2025

A. GENERAL INFORMATION

01	Project Location (city)	SAN PEDRO	04 Total Conditioned Floor Area (ft²)	360
02	Climate Zone	6	05 Total Unconditioned Floor Area (ft²)	0
03	Occupancy Types Within Project (select all that apply):		06 # of Stories (Habitable Above Grade)	1
• Support Areas				

B. PROJECT SCOPE

This table includes any lighting systems that are within the scope of the permit application and are demonstrating compliance using the prescriptive path outlined in 140.6 / 170.2(e) or 141.0(b)2 / 180.2(b)4 for alterations.

Scope of Work	Conditioned Spaces		Unconditioned Spaces	
01	02	03	04	05
My Project Consists of (check all that apply):	Calculation Method	Area (ft²)	Calculation Method	Area (ft²)
☒ New Lighting System	Area Category Method	360	Area Category Method	0
☐ New Lighting System - Parking Garage				
Total Area of Work (ft²)	360		0	

STATE OF CALIFORNIA
Indoor Lighting
CALIFORNIA ENERGY COMMISSION

CERTIFICATE OF COMPLIANCE		NRCC-LTI-E
Project Name: TERMINAL ISLAND MARITIME SUPPORT FACILITY	**Report Page:**	**(Page 2 of 7)**
	Date Prepared:	9/15/2025

C. COMPLIANCE RESULTS

If any cell on this table says "DOES NOT COMPLY" or "COMPLIES with Exceptional Conditions" refer to Table D. for guidance.

Lighting in conditioned and unconditioned spaces must not be combined for compliance per 140.6(b)1 / 170.2(e)	Allowed Lighting Power per 140.6(b) / 170.2(e) (Watts)						Adjusted Lighting Power per 140.6(a) / 170.2(e) (Watts)				Compliance Results
	01	02	03	04	05		06	07		08	09
	Complete Building 140.6(c)1	Area Category 140.6(c)2 / 170.2(e)4	Area Category Additional 140.6(c)2G / 170.2(e)4Av (+)	Tailored 140.6(c)3 / 170.2(e)4B (+)	= **Total Allowed** (Watts)	≥	Total Designed (Watts)	Adjustments PAF Lighting Control Credits 140.6(a)2 / 170.2(e)1B (-)	=	**Total Adjusted** (Watts) *Includes Adjustments	**05 must be >= 08 140.6 / 170.2(e)**
	(See Table I)	(See Table I)	(See Table J)	(See Table K)			(See Table F)	(See Table P)			
Conditioned		234	0		= 234	≥	230	0	=	230	COMPLIES
Unconditioned					=	≥			=		
Controls Compliance (See Table H for Details)											COMPLIES
Rated Power Reduction Compliance (See Table Q for Details)											

D. EXCEPTIONAL CONDITIONS

This table is auto-filled with uneditable comments because of selections made or data entered in tables throughout the form.

E. ADDITIONAL REMARKS

This table includes remarks made by the permit applicant to the Authority Having Jurisdiction.

STATE OF CALIFORNIA
Indoor Lighting
CALIFORNIA ENERGY COMMISSION

CERTIFICATE OF COMPLIANCE		NRCC-LTI-E
Project Name: TERMINAL ISLAND MARITIME SUPPORT FACILITY	**Report Page:**	**(Page 3 of 7)**
	Date Prepared:	9/15/2025

F. INDOOR LIGHTING FIXTURE SCHEDULE

This table includes all planned permanent and portable lighting other than dwelling unit/ hotel/ motel room lighting. Multifamily dwelling unit and hotel/motel room lighting is documented in Table T. If using Table T to document lighting in multifamily common use areas providing shared provisions for living, eating, cooking or sanitation, those luminaires are not included here.

Designed Wattage: Conditioned Spaces

01	02	03	04	05	06	07	08	09	10	
Name or Item Tag	Complete Luminaire Description	Modular (Track) Fixture	Small Aperture & Color Change[1]	Watts per luminaire[2]	How is Wattage determined	Total Number of Luminaires	Excluded per 140.6(a)3 / 170.2(e)2C	Design Watts	Field Inspector	
									Pass	Fail
F2	LED 10W	No	NA	10	Mfr. Spec	5	No	50	☐	☐
F3	RECESSED LINEAR	No	NA	40	Mfr. Spec	4	No	160	☐	☐
F5	F5 - 4 FEET LINEAR	No	NA	20	Mfr. Spec	1	No	20	☐	☐
Total Designed Watts: CONDITIONED SPACES								230		

[1]*FOOTNOTE: Design Watts for small aperture and color changing luminaires which qualify per 140.6(a)4B / 170.2(e)2D is adjusted to be 75% /80% of their rated wattage. Table F automatically makes this adjustment, the permit applicant should enter full rated wattage in column 05.*

[2]*Authority Having Jurisdiction may ask for Luminaire cut sheets to confirm wattage used for compliance per 130.0(c) / 160.5(b). Wattage used must be the maximum rated for the luminaire, not the lamp.*

G. MODULAR LIGHTING SYSTEMS

This section does not apply to this project.

H. INDOOR LIGHTING CONTROLS (Not including PAFs)

This table includes lighting controls for conditioned and unconditioned spaces.

Building Level Controls

01	02	03	
		Field Inspector	
		Pass	Fail
Mandatory Demand Response 110.12(c)	Shut-off controls 130.1(c) / 160.5(b)4C	☐	☐
NA < 4,000W subject to multilevel	Whole Building Auto Time Switch		

STATE OF CALIFORNIA
Indoor Lighting
CALIFORNIA ENERGY COMMISSION

CERTIFICATE OF COMPLIANCE		NRCC-LTI-E
Project Name: TERMINAL ISLAND MARITIME SUPPORT FACILITY	**Report Page:**	**(Page 4 of 7)**
	Date Prepared:	9/15/2025

H. INDOOR LIGHTING CONTROLS (Not including PAFs)

Area Level Controls

04	05	06	07	08	09	10	11	12	
Area Description	Complete Building or Area Category Primary Function Area	Manual Area Controls 130.1(a) / 160.5(b)4A	Multi-Level Controls 130.1(b) / 160.5(b)4B	Shut-Off Controls 130.1(c) // 160.5(b)4C	Primary/Skylit Daylighting 130.1(d) / 160.5(b)4D	Secondary Daylighting 130.1(d) / 160.5(b)4D	Interlocked Systems 140.6(a)1/ 170.2(e)2A	Field Inspector	
								Pass	Fail
WASHROOM	Restroom	Readily Accessible	NA: Restrooms	Occupancy Sensor	NA: Skylight shaded	NA: Garage daylight adaption	No	☐	☐
							13		
							Plan Sheet Showing Daylit Zones:		

I. LIGHTING POWER ALLOWANCE: COMPLETE BUILDING OR AREA CATEGORY METHODS

Each area complying using the Complete Building or Area Category Methods per 140.6(b) are included in this table. Column 06 indicates if additional lighting power allowances per 140.6(c) or adjustments per 140.6(a) are being used .

Conditioned Spaces

01	02	03	04	05	06	
Area Description	Complete Building or Area Category Primary Function Area	Allowed Density (W/ft²)	Area (ft²)	Allowed Wattage (Watts)	Additional Allowance / Adjustment	
					Area Category	PAF
WASHROOM	Restroom	0.65	360	234	No	No
		TOTALS:	360	234	See Tables J, or P for detail	

J. ADDITIONAL ALLOWANCE: AREA CATEGORY METHOD QUALIFYING LIGHTING SYSTEM

This section does not apply to this project.

STATE OF CALIFORNIA
Indoor Lighting
CALIFORNIA ENERGY COMMISSION

CERTIFICATE OF COMPLIANCE		NRCC-LTI-E
Project Name: TERMINAL ISLAND MARITIME SUPPORT FACILITY	**Report Page:**	**(Page 5 of 7)**
	Date Prepared:	9/15/2025

K. TAILORED METHOD GENERAL LIGHTING POWER ALLOWANCE

This section does not apply to this project.

L. ADDITIONAL LIGHTING ALLOWANCE: TAILORED WALL DISPLAY

This section does not apply to this project.

M. ADDITIONAL LIGHTING ALLOWANCE: TAILORED FLOOR AND TASK LIGHTING

This section does not apply to this project.

N. ADDITIONAL LIGHTING ALLOWANCE: TAILORED DECORATIVE /SPECIAL EFFECTS

This section does not apply to this project.

O. ADDITIONAL LIGHTING ALLOWANCE: TAILORED VERY VALUABLE MERCHANDISE

This section does not apply to this project.

P. POWER ADJUSTMENT: LIGHTING CONTROL CREDIT (POWER ADJUSTMENT FACTOR (PAF))

This section does not apply to this project.

Q. RATED POWER REDUCTION COMPLIANCE FOR ONE-FOR-ONE ALTERATIONS

This section does not apply to this project.

R. 80% LIGHTING POWER FOR ALL ALTERATIONS - CONTROLS EXCEPTIONS

This section does not apply to this project.

STATE OF CALIFORNIA
Indoor Lighting
CALIFORNIA ENERGY COMMISSION

CERTIFICATE OF COMPLIANCE		NRCC-LTI-E
Project Name: TERMINAL ISLAND MARITIME SUPPORT FACILITY	**Report Page:**	**(Page 6 of 7)**
	Date Prepared:	9/15/2025

S. DAYLIGHT DESIGN POWER ADJUSTMENT FACTOR (PAF)

This section does not apply to this project.

T. DWELLING UNIT LIGHTING

This section does not apply to this project.

U. DECLARATION OF REQUIRED CERTIFICATES OF INSTALLATION

Selections have been made based on information provided in this document. If any selections have been changed by permit applicant, an explanation should be included in Table E. Additional Remarks. These documents must be provided to the building inspector during construction and can be found online

Form/Title
NRCI-LTI-E - Must be submitted for all buildings

V. DECLARATION OF REQUIRED CERTIFICATES OF ACCEPTANCE

Selections have been made based on information provided in this document. If any selections have been changed by the permit applicant, an explanation should be included in Table E. Additional Remarks. These documents must be provided to the building inspector during construction and any with "-A" in the form name must be completed through an Acceptance Test Technician Certification Provider (ATTCP). For more information visit: http://www.energy.ca.gov/title24/attcp/providers.html

Form/Title	Systems/Spaces To Be Field Verified
NRCA-LTI-02-A - Must be submitted for occupancy sensors and automatic time switch controls.	Whole Building Time Switch; WASHROOM ;

NO.	DATE	DRAWN	REVISIONS -	CHK'D	APP'D
A	3/20/25	-	30 % CONCEPT DESIGN		
B	4/25/25	-	FINAL CONCEPT DESIGN		
C	7/18/25	-	40 % DESIGN		
D	9/16/25	-	80 % DESIGN		

NOT FOR CONSTRUCTION

NO.	DATE	DRAWN	REVISIONS -	CHK'D	APP'D

80% DESIGN REVIEW
SEP 19, 2025

Jacobs
2600 MICHELSON DRIVE, SUITE 500
IRVINE, CA 92612
T: (949) 224-7500
F: (949) 224-7501
IDS GROUP
1 PETERS CANYON ROAD, SUITE 100
IRVINE, CA 92606
TEL: 949.397.9200 FAX: 949.397.9201

REGISTERED PROFESSIONAL ENGINEER — EXP. _____ — ELECTRICAL — STATE OF CALIFORNIA

SCALE: AS SHOWN
DRAWN: C. Gude
CHECKED: S. Collins
DESIGNED: M. Reed
ENGINEER / ARCHITECT

TERMINAL ISLAND MARITIME SUPPORT FACILITY

ELECTRICAL T24 INDOOR FORMS

THE PORT OF LOS ANGELES
ENGINEERING DIVISION
425 S. PALOS VERDES STREET SAN PEDRO CA 90731-3309

DRAWING NUMBER: 1-3513
SHEET NUMBER: AE-11.1

RVT: Autodesk Docs://US CA_23371901_POLA TIMSF1-1613-IDS-11-E_Roadability Canopy_R23.rvt
DATE: 9/18/2025 7:47:24 PM

STATE OF CALIFORNIA
Indoor Lighting
CALIFORNIA ENERGY COMMISSION

CERTIFICATE OF COMPLIANCE		NRCC-LTI-E
Project Name:	TERMINAL ISLAND MARITIME SUPPORT FACILITY	Report Page: (Page 7 of 7)
Project Address:	425 S. PALOS VERDES STREET	Date Prepared: 9/15/2025

DOCUMENTATION AUTHOR'S DECLARATION STATEMENT	
I certify that this Certificate of Compliance documentation is accurate and complete.	
Documentation Author Name: IDS Group	Documentation Author Signature:
Company: IDS	Signature Date: 2025-09-15
Address: 1 Peters Canyon Rd	CEA/ HERS Certification Identification (if applicable): 6C24-CF7C-D36D-0EDC-CFB8-E73A-BB4C-7293-7AFC-43B9-C787-1BBE-0E5E-2785-F916-64D5
City/State/Zip: Irvine CA 92606	Phone: 949-387-8500

RESPONSIBLE PERSON'S DECLARATION STATEMENT	
I certify the following under penalty of perjury, under the laws of the State of California: 1. The information provided on this Certificate of Compliance is true and correct. 2. I am eligible under Division 3 of the Business and Professions Code to accept responsibility for the building design or system design identified on this Certificate of Compliance (responsible designer) 3. The energy features and performance specifications, materials, components, and manufactured devices for the building design or system design identified on this Certificate of Compliance conform to the requirements of Title 24, Part 1 and Part 6 of the California Code of Regulations. 4. The building design features or system design features identified on this Certificate of Compliance are consistent with the information provided on other applicable compliance documents, worksheets, calculations, plans and specifications submitted to the enforcement agency for approval with this building permit application. 5. I will ensure that a completed signed copy of this Certificate of Compliance shall be made available with the building permit(s) issued for the building, and made available to the enforcement agency for all applicable inspections. I understand that a completed signed copy of this Certificate of Compliance is required to be included with the documentation the builder provides to the building owner at occupancy.	
Responsible Designer Name:	Responsible Designer Signature:
Company:	Date Signed: 2025-09-15
Address:	License:
City/State/Zip:	Phone:

STATE OF CALIFORNIA
Outdoor Lighting
CALIFORNIA ENERGY COMMISSION

CERTIFICATE OF COMPLIANCE		NRCC-LTO-E
Project Name:	TERMINAL ISLAND MARITIME SUPPORT FACILITY	Report Page: (Page 1 of 7)
Project Address:	425 S. PALOS VERDES STREET	Date Prepared: 9/15/2025

This document is used to demonstrate compliance with requirements in 110.9, 130.0, 130.2, 140.7, and 141.0(b)2L for outdoor lighting scopes using the prescriptive path for nonresidential and hotel/motel occupancies. It is also used to document compliance with requirements in 160.5, 170.2(e)6, 180.1(a) and 180.2(b)4Bv for outdoor lighting scopes using the prescriptive path for multifamily and mixed-use occupancies. Multifamily includes dormitory and senior living facilities.

A. GENERAL INFORMATION

01	Project Location (city)	SAN PEDRO	04 Total Illuminated Hardscape Area (ft²)	450
02	Climate Zone	6		
03	Outdoor Lighting Zone per Title 24 Part 1 10.114 or as designated by Authority Having Jurisdiction (AHJ):			
☐	LZ-0: Very Low - Undeveloped Parkland	☒ LZ-2: Moderate - Urban Clusters	☐ LZ-4: High - Must be reviewed by CA Energy Commission for Approval	
☐	LZ-1: Low - Rural Areas	☐ LZ-3: Moderately High - Urban Areas		
05	Occupancy Types within Project			
●	Support Areas			

B. PROJECT SCOPE

This table includes outdoor lighting systems that are within the scope of the permit application and are demonstrating compliance using the prescriptive path outlined in 140.7 / 170.2(e)6 or 141.0(b)2L / 180.2(b)4Bv for alterations.

My Project Consists of:

01	02	
☒ New Lighting System	Must Comply with Allowances from 140.7 / 170.2(e)6	
☐ Altered Lighting System	Is your alteration increasing the connected lighting load (Watts)?	○ Yes ○ No
03	04	05
% of Existing Luminaires Being Altered[1]	Sum Total of Luminaires Being Added or Altered	Calculation Method
☐ < 10% ☐ >= 10% and < 50% ☐ >= 50%		

Please proceed to Table F. Outdoor Lighting Fixture Schedule to define the project's luminaires.

[1] FOOTNOTES: % of Existing Luminaires Being Altered = (Sum Total of Luminaires Being Added or Altered / Existing Luminaires within the Scope of the Permit Application) x 100.

STATE OF CALIFORNIA
Outdoor Lighting
CALIFORNIA ENERGY COMMISSION

CERTIFICATE OF COMPLIANCE		NRCC-LTO-E
Project Name:	TERMINAL ISLAND MARITIME SUPPORT FACILITY	Report Page: (Page 2 of 7)
		Date Prepared: 9/15/2025

C. COMPLIANCE RESULTS

Results in this table are automatically calculated from data input and calculations in Tables F through N. Note: If any cell on this table says "COMPLIES with Exceptional Conditions" refer to Table D. Exceptional Conditions for guidance or see applicable Table referenced below.

Calculations of Total Allowed Lighting Power (Watts) 140.7 / 170.2(e)6 or 141.0(b)2L / 180.2(b)4Bv												Compliance Results		
01		02		03		04		05		06		07		08	09
General Hardscape Allowance 140.7(d)1 / 170.2(e)6 (See Table I)	+	Per Application 140.7(d)2 / 170.2(e)6 (See Table J)	+	Sales Frontage 140.7(d)2 (See Table K)	+	Ornamental 140.7(d)2 / 170.2(e)6 (See Table L)	+	Per Specific Area 140.7(d)2 / 170.2(e)6 (See Table M)	OR	Existing Power Allowance 141.0(b)2L / 180.2(b)4Bv (See Table N)	=	**Total Allowed** (Watts)	≥	**Total Actual** (Watts)	**07 must be >= 08**
219	+	---	+	---	+	---	+	1,818	OR	---	=	2,037	≥	1,908	COMPLIES
										Shielding Compliance (See Table G for Details)				N/A	
										Controls Compliance (See Table H for Details)				Not applicable	

D. EXCEPTIONAL CONDITIONS

This table is auto-filled with uneditable comments because of selections made or data entered in tables throughout the form.

E. ADDITIONAL REMARKS

This table includes remarks made by the permit applicant to the Authority Having Jurisdiction.

STATE OF CALIFORNIA
Outdoor Lighting
CALIFORNIA ENERGY COMMISSION

CERTIFICATE OF COMPLIANCE		NRCC-LTO-E
Project Name:	TERMINAL ISLAND MARITIME SUPPORT FACILITY	Report Page: (Page 3 of 7)
		Date Prepared: 9/15/2025

F. OUTDOOR LIGHTING FIXTURE SCHEDULE

For new or altered lighting systems demonstrating compliance with 140.7 / 170.2(e)6 all new luminaires being installed and any existing luminaires remaining or being moved within the spaces covered by the permit application are included in the Table below. For altered lighting systems using the Existing Power method per 141.0(b)2L only new luminaires being installed and replacement luminaires being installed as part of the project scope are included (ie, existing luminaires remaining or existing luminaires being moved are not included). Outdoor lighting attached to multifamily buildings and controlled from the inside of a dwelling unit are included in Table H. and are not included here. All other multifamily outdoor lighting is included here.

Designed Wattage:

01	02		03	04	05	06	07	08	09	10	
Name or Item Tag	Complete Luminaire Description		Watts per luminaire[1, 2]	How is Wattage determined	Total Number Luminaires [2]	Luminaire Status[3]	Excluded per 140.7(a) / 170.2(e)6A	Design Watts	Cutoff Req. > 6,200 initial lumen output 130.2(b) / 160.5(c)1[4]	Field Inspector	
										Pass	Fail
F1	F1 - VAPORTITE 8 FEET LINEAR	☐ Linear	101	Mfr. Spec	18	New	☐	1,818	NA: < 6200 lumens	☐	☐
F4	F4 - WALLPACK	☐ Linear	18	Mfr. Spec	5	New	☐	90	NA: < 6200 lumens	☐	☐
							Total Design Watts:	1908			

* NOTES: Selections with a * require a note in the space below explaining how compliance is achieved.
EX: Luminaire is lighting a statue; EXCEPTION 2 to 130.2(b)

[1] FOOTNOTES: Authority Having Jurisdiction may ask for Luminaire cut sheets to confirm wattage used for compliance per 130.0(c) / 160.5(b)
[2] For linear luminaires, wattage should be indicated as W/lf instead of Watts/luminaire. Total linear feet should be indicated in column 05 instead of number of luminaires.
[3] Select "New" for new luminaires in a new outdoor lighting project, or for added luminaires in an alteration. Select "Altered" for replacement luminaires in an alteration. Select "Existing to Remain" for existing luminaires within the project scope that are not being altered and are remaining. Select "Existing Reinstalled" for existing luminaires which are being removed and reinstalled as part of the project scope.
[4] Compliance with mandatory shielding requirements is required for luminaires with initial lumen output >= 6,200 unless exempted by 130.2(b)/ 160.5(c)

G. SHIELDING REQUIREMENTS (BUG)

This section does not apply to this project.

STATE OF CALIFORNIA
Outdoor Lighting
CALIFORNIA ENERGY COMMISSION

CERTIFICATE OF COMPLIANCE		NRCC-LTO-E
Project Name:	TERMINAL ISLAND MARITIME SUPPORT FACILITY	Report Page: (Page 4 of 7)
		Date Prepared: 9/15/2025

H. OUTDOOR LIGHTING CONTROLS

This table demonstrates compliance with controls requirements for all new or altered luminaires installed as part of the permit application. For alteration projects, luminaires which are existing to remain (ie untouched) and luminaires which are removed and reinstalled (wiring only) do not need to be included in this table even if they are within the spaces covered by the permit application.
Outdoor lighting for nonresidential buildings, parking garages and common service areas in multifamily buildings must be documented separately from outdoor lighting attached to multifamily buildings and controlled from the inside of a dwelling unit

Mandatory Controls for Nonresidential Occupancies, Parking Garages & Common Areas in Multifamily Buildings

01	02	03	04	05	
Area Description	Shut-Off 130.2(c)1 / 160.5(c)	Auto-Schedule 130.2(c)2 / 160.5(c)	Motion Sensor 130.2(c)3 / 160.5(c)	Field Inspector	
				Pass	Fail

[1] FOOTNOTE: Text has been abbreviated, please refer to Table 160.5-A to confirm compliance with the specific light source technologies listed.
[2] Authority having jurisdiction may ask for cutsheets or other documentation to confirm compliance of light source.
[3] Recessed luminaires marked for use in fire-rated installations, and recessed luminaires installed in non-insulated ceilings are excepted from ii and iii.

STATE OF CALIFORNIA
Outdoor Lighting
CALIFORNIA ENERGY COMMISSION

CERTIFICATE OF COMPLIANCE		NRCC-LTO-E
Project Name:	TERMINAL ISLAND MARITIME SUPPORT FACILITY	Report Page: (Page 5 of 7)
		Date Prepared: 9/15/2025

I. LIGHTING POWER ALLOWANCE (per 140.7 / 170.2(e))

This table includes areas using allowance calculations per 140.7 / 170.2(e). General Hardscape Allowance is per Table 140.7-A/Table 170.2-R while "Use it or lose it" Allowances are per Table 140.7-B /Table 170.2-S. Indicate which allowances are being used to expand sections for user input. Luminaires that qualify for one of the "Use it or lose it" allowances shall not qualify for another "Use it or lose it" allowance.
Outdoor lighting attached to multifamily buildings and controlled from the inside of a dwelling unit are included in Table H. and are not included here. All other multifamily outdoor lighting is included here.

01				
	"Use it or lose it" Allowance (select all that apply) (select all that apply)			
☒ General Hardscape Allowance Table I (below)	☐ Per Application Table J	☐ Sales Frontage Table K	☐ Ornamental Table L	☒ Per Specific Area Table M

Calculated General Hardscape Lighting Power Allowance per Table 140.7-A for Nonresidential & Hotel/Motel

02	03	04	05	06	07	08	09
Area Description	Area Wattage Allowance (AWA)			Linear Wattage Allowance (LWA)			Total General AWA + LWA (Watts)
	Illuminated Area (ft²)	Allowed Density (W/ft²)	Area Allowance (Watts)	Perimeter Length (lf)	Allowed Density (W/lf)	Linear Allowance (Watts)	
Walkway	450	0.019	8.5	70	0.2	10.5	19
					Initial Wattage Allowance for Entire Site (Watts):		200
					Instances of Initial Wattage Allowance (LZ 0 only)[1]		
					Total General Hardscape Allowance (Watts):		219

J. LIGHTING ALLOWANCE: PER APPLICATION

This section does not apply to this project.

K. LIGHTING ALLOWANCE: SALES FRONTAGE

This section does not apply to this project.

L. LIGHTING ALLOWANCE: ORNAMENTAL

This section does not apply to this project.

NO.	DATE	DRAWN	REVISIONS -	CHK'D	APP'D
A	3/20/25	-	30 % CONCEPT DESIGN		
B	4/25/25	-	FINAL CONCEPT DESIGN		
C	7/18/25	-	40 % DESIGN		
D	9/16/25	-	80 % DESIGN		

NOT FOR CONSTRUCTION

80% DESIGN REVIEW
SEP 19 , 2025

Jacobs
2600 MICHELSON DRIVE, SUITE 500
IRVINE, CA 92612
T: (949) 224-7500
F: (949) 224-7501
IDS
IDS GROUP
1 PETERS CANYON ROAD, SUITE 150
IRVINE, CA 92606
TEL: 949-387-8500 FAX: 949-387-8800

REGISTERED PROFESSIONAL ENGINEER — STATE OF CALIFORNIA — ELECTRICAL — EXP.

SCALE: AS SHOWN
DRAWN: C. Gude
CHECKED: S. Collins
DESIGNED: M. Reed
ENGINEER / ARCHITECT

TERMINAL ISLAND MARITIME SUPPORT FACILITY

ELECTRICAL T24 OUTDOOR FORMS

THE PORT OF LOS ANGELES
ENGINEERING DIVISION
425 S. PALOS VERDES STREET SAN PEDRO CA 90731-3309

DRAWING NUMBER 1-3513
SHEET NUMBER AE-11.2

RVT: Autosave Docs:/GS CA_D3(T1IN)_PCLA TIMSF1-1-3513-IDS-11-E_Roadability Canopy_R25.rvt
DATE: 9/16/2025 7:47:36 PM

STATE OF CALIFORNIA
Outdoor Lighting
CALIFORNIA ENERGY COMMISSION

CERTIFICATE OF COMPLIANCE		NRCC-LTO-E
Project Name: TERMINAL ISLAND MARITIME SUPPORT FACILITY	**Report Page:**	**(Page 6 of 7)**
	Date Prepared:	9/15/2025

M. LIGHTING ALLOWANCE: PER SPECIFIC AREA

This table includes areas using the wattage allowance per specific area from Table 140.7-B /Table 170.2-S. More than one specific area allowance may be taken in a single project, if applicable. However, multiple specific area allowances may not be taken for the exact same area on the site.

01	02	03	04	05	06	07	08	09	10
Area Description	Specific Area Type per Table 140.7-B	CALCULATED ALLOWANCE (Watts)			DESIGN WATTS				Additional Allowance (Watts)
		Specific Area (ft^2)[1]	Allowed Density (W/ft^2)	Extra Allowance (Watts)	Luminaire Name or Item Tag	Watts per Luminaire	# of Luminaires	Design Watts	
Roadability Canopy	ServiceStationCanopy	9400	0.4	4042	F1	101	18	1,818	1818
							Total Design Watts for this Area:	1818	
							Total Allowance (Watts) All Areas:		1818

[1] *FOOTNOTES: See Table 140.7-B /Table 170.2-S for rules for calculating the specific areas (ft^2 for these additional lighting allowances.*
[2] *For luminaires indicated in Table F as linear, wattage in column 07 is W/lf instead of Watts/luminaire. Total linear feet should be indicated in column 08 instead of number of luminaires.*

N. EXISTING CONDITIONS POWER ALLOWANCE (alterations only)

This section does not apply to this project.

O. DECLARATION OF REQUIRED CERTIFICATES OF INSTALLATION

Selections have been made based on information provided in this document. If any selection has been changed by permit applicant, an explanation should be included in Table E. Additional Remarks. These documents must be provided to the building inspector during construction and can be found online

Form/Title
NRCI-LTO-E - Must be submitted for all buildings

P. DECLARATION OF REQUIRED CERTIFICATES OF ACCEPTANCE

There are no NRCA forms required for this project.

STATE OF CALIFORNIA
Outdoor Lighting
CALIFORNIA ENERGY COMMISSION

CERTIFICATE OF COMPLIANCE		NRCC-LTO-E
Project Name: TERMINAL ISLAND MARITIME SUPPORT FACILITY	**Report Page:**	**(Page 7 of 7)**
Project Address: 425 S. PALOS VERDES STREET	**Date Prepared:**	9/15/2025

DOCUMENTATION AUTHOR'S DECLARATION STATEMENT

I certify that this Certificate of Compliance documentation is accurate and complete.

Documentation Author Name: IDS Group	Documentation Author Signature:
Company: IDS	Signature Date: 2025-09-15
Address: 1 Peters Canyon Rd	CEA/ HERS Certification Identification (if applicable): 6C24-CF7C-D36D-0EDC-CFB8-E73A-8B4C-7293-7AFC-43B9-C787-1BBE-0E5E-2785-F916-64D5
City/State/Zip: Irvine CA 92606	Phone: 949-387-8500

RESPONSIBLE PERSON'S DECLARATION STATEMENT

I certify the following under penalty of perjury, under the laws of the State of California:

1. The information provided on this Certificate of Compliance is true and correct.
2. I am eligible under Division 3 of the Business and Professions Code to accept responsibility for the building design or system design identified on this Certificate of Compliance (responsible designer)
3. The energy features and performance specifications, materials, components, and manufactured devices for the building design or system design identified on this Certificate of Compliance conform to the requirements of Title 24, Part 1 and Part 6 of the California Code of Regulations.
4. The building design features or system design features identified on this Certificate of Compliance are consistent with the information provided on other applicable compliance documents, worksheets, calculations, plans and specifications submitted to the enforcement agency for approval with this building permit application.
5. I will ensure that a completed signed copy of this Certificate of Compliance shall be made available with the building permit(s) issued for the building, and made available to the enforcement agency for all applicable inspections. I understand that a completed signed copy of this Certificate of Compliance is required to be included with the documentation the builder provides to the building owner at occupancy.

Responsible Designer Name:	Responsible Designer Signature:
Company:	Date Signed: 2025-09-15
Address:	License:
City/State/Zip:	Phone:

CA Building Energy Efficiency Standards - 2022 Nonresidential Compliance
Generated Date/Time:
Report Version: 2022.0.000
Schema Version: rev 20220101
Documentation Software: EnergyPro
Compliance ID: EnergyPro-4443-0925-0833
Report Generated: 2025-09-15 15:02:10

NO.	DATE	DRAWN	REVISIONS -	CHK'D	APP'D
A	3/20/25	-	30 % CONCEPT DESIGN		
B	4/25/25	-	FINAL CONCEPT DESIGN		
C	7/18/25	-	40 % DESIGN		
D	9/16/25	-	80 % DESIGN		

NOT FOR CONSTRUCTION

NO.	DATE	DRAWN	REVISIONS -	CHK'D	APP'D
			80% DESIGN REVIEW SEP 19, 2025		

Jacobs
2920 MICHELSON DRIVE, SUITE 500
IRVINE, CA 92612
T: (949) 224-7500
F: (949) 224-7501
IDS GROUP
1 PETERS CANYON ROAD, SUITE 100
IRVINE, CA 92606
TEL: 949.387.8500 FAX: 949.387.9800

REGISTERED PROFESSIONAL ENGINEER — ELECTRICAL — STATE OF CALIFORNIA — EXP. _____

SCALE:	AS SHOWN
DRAWN:	C. Gude
CHECKED:	S. Collins
DESIGNED:	M. Reed

ENGINEER / ARCHITECT

TERMINAL ISLAND MARITIME SUPPORT FACILITY

ELECTRICAL T24 OUTDOOR FORMS

THE PORT OF LOS ANGELES
ENGINEERING DIVISION
425 S. PALOS VERDES STREET SAN PEDRO CA 90731-3309

DRAWING NUMBER: 1-3513
SHEET NUMBER: AE-11.3

RVT: Autodesk Docs://GE-CA_DSTP.001_PODLA TIMSF1-3513-IDS-11-E_Roadability Canopy_R25.rvt
DATE: 9/16/2025 7:41:47 PM

TABLE 120.3-A PIPE INSULATION THICKNESS

FLUID TEMPERATURE RANGE (°F)	CONDUCTIVITY RANGE (IN BTU-INCH PER HOUR PER SQUARE FOOT PER °F)	INSULATION MEAN RATING TEMPERATURE (°F)	NOMINAL PIPE DIAMETER (IN INCHES) <1 TO 1	1 TO <1.5	1.5 TO <4	4 TO <8	8 AND LARGER
			INSULATION THICKNESS REQUIRED (IN INCHES)				
SPACE HEATING, HOT WATER (STEAM, STEAM CONDENSATE & HOT WATER) AND SERVICE WATER HEATING SYSTEMS							
ABOVE 350	0.32 - 0.34	250	4.5	5.0	5.0	5.0	5.0
251 - 350	0.29 - 0.31	200	3.0	4.0	4.5	4.5	4.5
201 - 250	0.27 - 0.30	150	2.5	2.5	2.5	3.0	3.0
141 - 200	0.25 - 0.29	125	1.5	1.5	2.0	2.0	2.0
105 - 140	0.22 - 0.28	100	1.0	1.5	1.5	1.5	1.5
SPACE COOLING SYSTEMS (CHILLED WATER, HVAC CONDENSATE, REFRIGERANT AND BRINE)							
40 - 60	0.21 - 0.27	75	0.5	0.5	1.0	1.0	1.0
BELOW 40	0.20 - 0.26	50	1.0	1.5	1.5	1.5	1.5

CALGREEN MANDATORY MEASURES

FIXTURE FLOW RATES

FIXTURE TYPE	MAXIMUM FLOW RATE
SHOWERHEADS	1.8 GPM @ 80 PSI
LAVATORY FAUCETS NONRESIDENTIAL	0.35 GPM @ 60 PSI
KITCHEN FAUCETS	1.8 GPM @ 60 PSI
WASH FOUNTAINS	1.8 GPM / 20 [RIM SPACE (IN.) @ 60 PSI]
METERING FAUCETS	0.2 GALLONS / CYCLE
METERING FAUCETS FOR WASH FOUNTAINS	0.20 GPM / 20 [RIM SPACE (IN.) @ 60 PSI]
GRAVITY TANK TYPE WATER CLOSETS	1.28 GALLONS / FLUSH (1)
FLUSHOMETER TANK WATER CLOSETS	1.28 GALLONS / FLUSH (1)
FLUSHOMETER VALVE WATER CLOSETS	1.28 GALLONS / FLUSH (1)
ELECTROMECHANICAL HYDRAULIC WATER CLOSETS	1.28 GALLONS / FLUSH (1)
URINALS	0.125 GALLONS / FLUSH

NOTES:

(1) INCLUDES SINGLE AND DUAL FLUSH WATER CLOSETS WITH AN EFFECTIVE FLUSH OF 1.28 GALLONS OR LESS:
SINGLE FLUSH TOILET - THE EFFECTIVE FLUSH VOLUME SHALL NOT EXCEED 1.28 GALLONS (4.8 LITERS). THE EFFECTIVE FLUSH VOLUME IS THE AVERAGE FLUSH VOLUME WHEN TESTED IN ACCORDANCE WITH ASME A 112.19.233.2.
DUAL FLUSH TOILETS - THE EFFECTIVE FLUSH VOLUME SHALL NOT EXCEED 1.28 GALLONS (4.8 LITERS). THE EFFECTIVE FLUSH VOLUME IS DEFINED AS THE COMPOSITE, AVERAGE FLUSH VOLUME OF TWO REDUCED FLUSHES AND ONE FULL FLUSH. FLUSH VOLUMES WILL BE TESTED IN ACCORDANCE WITH ASME A 112.19.2 ASME A 112.19.14.

LEGEND

SYMBOL	ABBREVIATION	DESCRIPTION
	S OR W	SOIL OR WASTE (ABOVE GRADE)
	S OR W	SOIL OR WASTE (BELOW GRADE)
SD	SD	STORM DRAIN
OD	OD	OVERFLOW DRAIN
	V	SANITARY VENT
CD	CD	CONDENSATE DRAIN
	CW	COLD WATER
	HW	HOT WATER
HWR	HWR	HOT WATER RETURN
CA	CA	COMPRESSED AIR
	DOWN	DOWN PIPING
	UP	UP PIPING
	FCO	FLOOR CLEANOUT
	COTG	CLEANOUT TO GRADE
	WCO	WALL CLEANOUT
	SOV	SHUT-OFF VALVE
	CV	CHECK VALVE
	WHA	WATER HAMMER ARESTOR
	TP	TRAP PRIMER
F	F	FIRE LINE
	POC	POINT OF CONNECTION
	POD	POINT OF DISCONNECTION
	RD	ROOF DRAIN
	VTR	VENT THRU ROOF

APPLICABLE CODES AND STANDARD

2023 LOS ANGELES CITY BUILDING CODE
2022 CALIFORNIA ADMINISTRATIVE CODE (CAC), PART 1, TITLE 24 CCR
2022 CALIFORNIA BUILDING CODE (CBC), PART 2, TITLE 24 CCR
2022 CALIFORNIA ELECTRICAL CODE (CEC), PART 3, TITLE 24 CCR
2022 CALIFORNIA MECHANICAL CODE (CMC), PART 4, TITLE 24 CCR
2022 CALIFORNIA PLUMBING CODE (CPC), PART 5, TITLE 24 CCR
2022 CALIFORNIA ENERGY CODE, PART 6, TITLE 24 CCR
2022 CALIFORNIA FIRE CODE (CFC), PART 9, TITLE 24 CCR
2022 CALIFORNIA EXISTING BUILDING CODE (CEBC), PART 10, TITLE 24 CCR
2022 CALIFORNIA GREEN BUILDING STANDARDS CODE (CALGREEN), PART 11, TITLE 24 CCR
2022 CALIFORNIA REFERENCED STANDARDS CODE, PART 12, TITLE 24 CCR
TITLE 19 CCR, PUBLIC SAFETY, STATE FIRE MARSHAL REGULATIONS

APPLICABLE STANDARDS
FOR A LIST OF APPLICABLE STANDARDS, INCLUDING CALIFORNIA AMENDMENTS TO THE NFPA STANDARDS, REFER TO CBC CHAPTER 35 AND CFC CHAPTER 80.

PARTIAL LIST OF APPLICABLE STANDARDS

For a complete list of applicable NFPA standards refer to 2022 CBC (SFM) Chapter 35 and California Fire Code Chapter 80.

California Building Code Chapter 35 for State of California amendments to the NFPA Standards.

PROJECT NOTES

A. OMISSIONS AND OR CONFLICTS BETWEEN THE VARIOUS ELEMENTS OF THE CONSTRUCTION DOCUMENTS SHALL BE BROUGHT TO THE ATTENTION OF AND RESOLVED WITH THE ARCHITECT PRIOR TO PROCEEDING WITH ANY OF THE AFFECTED WORK.

B. MATERIALS AND WORKMANSHIP SHALL CONFORM TO THE REQUIREMENTS OF CBC & CPC.

C. THE PLUMBING CONSTRUCTION DOCUMENTS REPRESENT THE INTENT OF PLUMBING AND PIPING SYSTEMS, NOT THE METHOD OF CONSTRUCTION. THE CONTRACTOR SHALL BE RESPONSIBLE FOR ALL LABOR, MATERIALS, EQUIPMENT AND ACCESSORIES NECESSARY TO ACHIEVE THE FINISHED SYSTEMS.

D. FIELD VERIFY AND COORDINATE WITH ELECTRICAL SYSTEMS INSTALLER EXACT ELECTRICAL REQUIREMENTS OF PLUMBING PRODUCTS REQUIRING POWER.

E. ELECTRICAL POWER CONNECTIONS SHALL BE MADE BY ELECTRICAL SYSTEMS INSTALLER UNDER PROVISIONS OF ELECTRIC SPECIFICATIONS.

ACCESSIBILITY CRITERIA

1. THE HEIGHT OF ACCESSIBLE WATER CLOSETS SHALL BE MINIMUM OF 17 INCHES AND A MAXIMUM OF 19 INCHES MEASURED TO THE TOP OF THE TOILET SEAT. CONTROLS SHALL BE OPERABLE WITH ONE HAND AND SHALL NOT REQUIRE TIGHT GRASPING, PINCHING OR TWISTING OF THE WRIST. CONTROLS FOR FLUSH VALVES SHALL BE MOUNTED ON THE WIDE SIDE OF TOILET AREAS, NO MORE THAN 44 INCHES ABOVE THE FLOOR. THE FORCE REQUIRED TO ACTIVATE WATER CLOSET FLUSH VALVE CONTROLS SHALL BE NO GREATER THAN 5 LBS.

2. HOT WATER AND DRAIN PIPES UNDER LAVATORIES SHALL BE INSULATED OR OTHERWISE COVERED. THERE SHALL BE NO SHARP OR ABRASIVE SURFACES UNDER LAVATORIES.

3. FAUCET CONTROLS AND OPERATING MECHANISMS SHALL BE OPERABLE WITH ONE HAND AND SHALL NOT REQUIRE TIGHT GRASPING, PINCHING OR TWISTING OF THE WRIST. THE FORCE REQUIRED TO ACTIVATE CONTROLS SHALL BE NO GREATER THAN 5 LBS. ELECTRONICALLY CONTROLLED MECHANISMS ARE ACCEPTABLE PROVIDED THAT FAUCET REMAINS OPEN FOR AT LEAST 10 SECONDS.

4. LAVATORIES SHALL BE MOUNTED WITH A CLEARANCE OF AT LEAST 29 INCHES FROM THE FLOOR TO THE BOTTOM OF THE APRON WITH KNEE CLEARANCE UNDER THE FRONT LIP EXTENDING A MINIMUM OF 30 INCHES WIDTH WITH 8 INCHES MINIMUM DEPTH AT THE TOP. TOE CLEARANCE SHALL BE THE SAME WIDTH AND SHALL BE A MINIMUM OF 9 INCHES HIGH FROM THE FLOOR AND A MINIMUM OF 17 INCHES DEEP FROM THE FRONT OF THE LAVATORY. A MAXIMUM OF 34" FROM FINISHED FLOOR TO FLOOD RIM LEVEL OF FIXTURE.

CA ENERGY CODE - ACCEPTANCE TESTING REQUIREMENT

THE CALIFORNIA ENERGY CODE SECTION 10-103 REQUIRES ACCEPTANCE TESTING ON ALL NEWLY INSTALLED LIGHTING CONTROLS, MECHANICAL SYSTEMS, ENVELOPES, AND PROCESS EQUIPMENT AFTER INSTALLATION AND BEFORE PROJECT COMPLETION. AN ACCEPTANCE TEST IS A FUNCTIONAL PERFORMANCE TEST TO HELP ENSURE THAT NEWLY INSTALLED EQUIPMENT IS OPERATING AND IN COMPLIANCE WITH THE ENERGY CODE.

LIGHTING CONTROLS ACCEPTANCE TESTS MUST BE PERFORMED BY A CERTIFIED LIGHTING CONTROLS ACCEPTANCE TEST TECHNICIAN (ATT).

MECHANICAL SYSTEM ACCEPTANCE TESTS MUST BE PERFORMED BY A CERTIFIED MECHANICAL ATT FOR PROJECTS SUBMITTED ON OR AFTER OCTOBER 1, 2023.

A LISTING OF CERTIFIED ATT CAN BE FOUND AT HTTPS://WWW.ENERGY.CA.GOV/PROGRAMS-AND-TOPICS/PROGRAMS/ACCEPTANCE-TEST-TECHNICIAN-CERTIFICATION-PROVIDER-PROGRAM/ACCEPTANCE .

THE ACCEPTANCE TESTING PROCEDURES MUST BE REPEATED, AND DEFICIENCIES MUST BE CORRECTED BY THE BUILDER OR INSTALLING CONTRACTOR UNTIL THE CONSTRUCTION / INSTALLATION OF THE SPECIFIED SYSTEMS CONFORM AND PASS THE REQUIRED ACCEPTANCE CRITERIA.

PROJECT INSPECTORS WILL BE COLLECTING THE FORMS TO CONFIRM THAT THE REQUIRED ACCEPTANCE TESTS HAVE BEEN COMPLETED.

NO.	DATE	DRAWN	REVISIONS -	CHK'D	APP'D
A	3/20/25	-	30 % CONCEPT DESIGN		
B	4/25/25	-	FINAL CONCEPT DESIGN		
C	7/18/25	-	40 % DESIGN		

NOT FOR CONSTRUCTION

NO.	DATE	DRAWN	REVISIONS -	CHK'D	APP'D

80% DESIGN REVIEW SEP 19, 2025

RVT:
DATE:

Jacobs
2600 MICHELSON DRIVE, SUITE 50
IRVINE, CA 92612
T: (949) 224-7500
F: (949) 224-7501
IDS GROUP
LICENSED PROFESSIONAL ENGINEER DARREN B. SMITH No. 30884 Exp. 12/31/26 MECHANICAL CIVIL STATE OF CALIFORNIA

SCALE:	AS SHOWN
DRAWN:	D. THAI
CHECKED:	D. SMITH
DESIGNED:	R. MAGNO
	ENGINEER / ARCHITECT

TERMINAL ISLAND MARITIME SUPPORT FACILITY

NOTES, ABRREV., LEGEND & APPLICABLE CODES

THE PORT OF LOS ANGELES
ENGINEERING DIVISION
425 S. PALOS VERDES STREET SAN PEDRO CA 90731-3309

DRAWING NUMBER: 1-3513
SHEET NUMBER: PL-01

GENERAL NOTES

1. THESE DRAWINGS SHALL BE READ IN CONJUNCTION WITH AND BE CONSIDERED A PART OF SEPARATE AND COMPLETE PLUMBING SPECIFICATIONS.
2. BEFORE COMMENCEMENT OF WORK, THE CONTRACTOR SHALL VERIFY THE ELEVATIONS, CHARACTERISTICS OF UTILITIES PIPING, AND EXACT ROUGH-IN LOCATIONS OF MECHANICAL EQUIPMENT AND EQUIPMENT PROVIDED BY OTHER TRADES IN FIELD AND SHALL IMMEDIATELY NOTIFY THE ARCHITECT OF ANY DISCREPANCIES OR PROBLEMS IN WRITING.
3. IN NO CASE SHALL DIMENSIONS BE SCALED FROM THE PLANS, SECTION, ELEVATIONS OR DETAILS ON THE PLUMBING DRAWINGS.
4. EXACT LOCATIONS AND MOUNTING HEIGHTS OF PLUMBING FIXTURES SHALL BE OBTAINED FROM THE ARCHITECTURAL DRAWINGS.
5. MECHANICAL CONTRACTOR SHALL WARRANTY THE ENTIRE PLUMBING IMPROVEMENT FOR ONE (1) YEAR. THE WARRANTY SHALL BE IMPLEMENTED UPON SUBSTANTIAL COMPLETION AND SHALL INCLUDE LABOR AND MATERIALS. NO ADDITIONAL COST WILL BE GRANTED TO CONTRACTOR RELATED TO BREAKDOWN, AND/OR WATER LEAKAGE OF THE PLUMBING SYSTEM OR REPLACING NON-OPERATIONAL MATERIAL/PARTS DURING THE WARRANTY PERIOD.
6. TRAPS FOR ALL LAVATORIES AND SINKS SHALL TRAP STRAIGHT BACK TO WALL WITH OFFSETS HAPPENING WITHIN THE WALL.
7. PLUMBING WORK SHALL BE INSTALLED SO AS TO AVOID INTERFERENCE WITH ELECTRICAL AND MECHANICAL EQUIPMENT AND STRUCTURAL FRAMING.
8. CLEANOUTS SHALL BE INSTALLED WHERE EASILY ACCESSIBLE. THE CONTRACTOR SHALL COORDINATE ALL CLEANOUT LOCATIONS WITH ALL EQUIPMENT, CABINETS, ETC., AND THE ARCHITECT PRIOR TO ANY INSTALLATION. CLEANOUTS SHALL BE INSTALLED
   1. ABOVE EACH URINAL.
   2. ABOVE EACH LAVATORY.
   3. IN WALLS. AVOID FLOOR CLEANOUT.
9. EACH PLUMBING VENTS SHALL TERMINATE NOT LESS THAT 10 FEET (3048 mm) FROM, OR NOT LESS THAN 3 FEET (914 mm) ABOVE, AN OPENABLE WINDOW, DOOR, OPENING, AIR INTAKE, OR VENT SHAFT, OR NOT LESS THAN 3 FEET (914 mm) IN EVERY DIRECTION FROM A LOT LINE, ALLEY AND STREET EXCEPTED.
10. VALVES, UNIONS, ETC. SHALL BE SAME SIZE AS PIPE UNLESS INDICATED OTHERWISE ON DRAWINGS.
11. UNIONS SHALL BE PROVIDED AND INSTALLED AFTER EACH VALVE AND PRIOR TO ALL EQUIPMENT CONNECTIONS. ALL EXISTING ANGLE VALVES AND SUPPLIES SHALL BE REPLACED WITH WITH MATERIAL IN COMPLIANCE WITH NSF 61/ANSI/NSF 372.
12. WORK SHALL BE PERFORMED AND MATERIALS SHALL BE INSTALLED IN COMPLIANCE WITH THE APPLICABLE CODES AS ADOPTED AND AMENDED BY THE AUTHORITY HAVING JURISDICTION. NOTHING IN THESE DRAWINGS SHALL BE CONSTRUED TO PERMIT WORK NOT CONFORMING TO THESE CODES OR OTHERS APPLICABLE CODE TO THIS PROJECT.
13. CONNECTIONS TO SITE PIPING SHALL BE COMPLETED BY THE PLUMBING CONTRACTOR.
14. SOIL, WASTE AND VENT PIPING SHALL SLOPE AT 2% UNLESS OTHERWISE INDICATED ON THE PLANS.
15 VALVES, TRAP PRIMERS, WATER HAMMER ARRESTERS OR OTHER EQUIPMENT SHOWN IN WALLS OR ABOVE NON-ACCESSIBLE CEILINGS SHALL BE INSTALLED BEHIND AN ACCESS PANEL.
16. PLUMBING FIXTURES AND EQUIPMENT SHALL BE CERTIFIED BY THE CALIFORNIA STATE ENERGY COMMISSION TO COMPLY WITH EFFICIENCY STANDARDS PER SECTION 2-5314(A) OF THE TITLE-24 REGULATIONS.
17. EXISTING PIPING DAMAGED DURING EXCAVATION SHALL BE REPAIRED WITH MATERIALS TO MATCH EXISTING BY THE CONTRACTOR.
18. PIPING INTO STEM WALLS AND FOOTINGS SHALL BE DOUBLE HALF LAP WRAPPED WITH 1/8" THICK "ARMOFLEX" INSULATION. THE CONTRACTOR SHALL BLOCK OUT AREAS IN STEM WALL AND FOOTING. PIPING SHALL AVOID THE LOWER 8" OF THE FOOTING.
19. COORDINATE EXACT LOCATION OF SITE PIPING INDICATED WITH ALL OTHER ON SITE PIPING AND EQUIPMENT BY CIVIL AND ELECTRICAL.
20. EXTEND WATER, SEWER AND STORM DRAIN SYSTEMS TO A POINT OF CONNECTION 5'-0" OUTSIDE OF BUILDING AND CONNECT AT THE INVERT ELEVATION SHOWN ON THE CIVIL DRAWINGS. PIPING BEYOND THIS POINT SHALL BE PER CIVIL DRAWINGS.
21. UNDERGROUND METAL PIPE LOCATED EITHER INSIDE OR OUTSIDE OF BUILDING SHALL BE ENCASED WITHIN A MINIMUM 10 MIL POLYETHYLENE PLASTIC SLEEVE SEALED WATER TIGHT WITH POLYVINYL CHLORIDE TAPE.
22. POINTS OF CONNECTION SHALL BE COORDINATED WITH THE GENERAL CONTRACTOR PRIOR TO BID.
23. CONNECTIONS TO EXISTING SERVICES SHALL BE MADE SUCH THAT INTERRUPTION TIME WILL BE AS SHORT AS POSSIBLE. THE CONTRACTOR SHALL GIVE THE OWNER'S REPRESENTATIVE SUFFICIENT NOTICE OF SUCH INTERRUPTION AND THE ACTUAL SHUT DOWN TIME SHALL BE AT A TIME DESIGNATED BY THE OWNER'S REPRESENTATIVE.
24. HORIZONTAL PIPING LINES EXTENDED AND CONNECTED TO EQUIPMENT SHALL BE RUN AT THE HIGHEST POSSIBLE ELEVATIONS AND NOT LESS THAN 6" ABOVE THE FLOOR TO PROVIDE CLEARANCE FOR CLEANING. AT WALL OR COLUMN LOCATIONS, PIPING ROUGH-IN SHALL BE STUBBED IN WALLS WHENEVER POSSIBLE.
25. CUTTING BORING, SAWCUTTING OR DRILLING THROUGH THE NEW OR EXISTING STRUCTURAL ELEMENTS ALLOWED ONLY WHEN SO DETAILED IN THE DRAWINGS OR ACCEPTED BY THE ARCHITECT AND STRUCTURAL ENGINEER APPROVAL. CUTTING OF EXISTING PAVINGS, WALKS AND/OR FLOORS SHALL BE BY MACHINE SAW CUTTING. FOR HOLES IN CONCRETE WALLS OR FLOORS UTILIZE CORE DRILLING EQUIPMENT.
26. ABOVE GROUND PIPING SYSTEMS SHALL BE LABELED IN ACCORDANCE WITH ASME A13.1.

REGULATORY NOTES

AREA SEPARATION

LOCATION AND RATING OF WALLS, ARE IDENTIFIED ON ARCHITECTURAL FLOOR PLANS.

PIPING

A. WHERE PIPING PENETRATES THE AREA SEPARATION WALL, FLOOR OR ROOF SURFACE THE SECTION PASSING THROUGH THE WALL SHALL BE ONLY OF METAL.

B. PENETRATIONS OF RATED ASSEMBLIES SHALL INCLUDE UL THROUGH- PENETRATION FIRE STOP DEVICES AND OR FIRE STOP SYSTEM.

C. FIRE STOPPING DEVICES AND MATERIALS SHALL BE APPLIED PER MANUFACTURERS WRITTEN INSTALLATION INSTRUCTIONS AND SECTION 078400 OF THE PROJECT SPECIFICATIONS.

D. FIRE RATING SHALL BE EQUAL TO AREA SEPARATION RATING. MANDATORY CONSERVATION MEASURES

PLUMBING FIXTURES

A. WATER CLOSETS SHALL BE WATER CONSERVING 1.28 GALLONS PER FLUSH TYPE.

B. LAVATORY, SINK FITTINGS SHALL BE LISTED AS "APPROVED" BY THE CALIFORNIA ENERGY COMMISSION.

1. FITTINGS AND SHOWER HEADS SHALL INCLUDE INTEGRAL FLOW RESTRICTING DEVICES TO LIMIT FLOW AS FOLLOWS:
   a. FITTINGS - 2.0 GPM MAXIMUM.

C. FAUCETS SHALL BE 0.35 GPM (USING AERATORS).

D. FIXTURE CONNECTIONS TO THE AREA SEPARATION WALL SURFACES OR THE SECTION PASSING THROUGH THE WALL SHALL ONLY BE OF METAL.

PIPING INSULATION

A. INSULATING MATERIAL AND COVERING ON PIPE AND TUBING SHALL BE INSTALLED IN COMPLIANCE WITH THE FLAME- SPREAD RATING NOT TO EXCEED 25 AND A SMOKE DENSITY RATING NOT TO EXCEED 50 WHEN TESTED IN ACCORDANCE WITH CBC STANDARD 8-1.

B. INSULATION, INSULATION JACKET, ADHESIVES, TAPES, ETC. SHALL BE APPLIED PER MANUFACTURERS WRITTEN INSTALLATION INSTRUCTIONS.

C. HOT WATER PIPING SHALL BE INSULATED TO A MINIMUM THERMAL RESISTANCE VALUE OF R-6 OR GREATER. SEE SPECIFICATIONS FOR REQUIREMENTS.

ENERGY CONSERVATION

A. DOMESTIC HOT WATER PIPING SHALL BE INSULATED CONSISTENT WITH THE REQUIREMENTS OF THE CALIFORNIA ENERGY COMMISSION - ENERGY EFFICIENCY STANDARDS SECTIONS 118 AND 123.

B. SERVICE WATER HEATING SYSTEMS AND EQUIPMENT SHALL COMPLY WITH ENERGY EFFICIENCY STANDARDS, SECTION 113.

GREEN BUILDING STANDARD NOTES

1. MINIMUM OF 65% OF NON HAZARDOUS CONSTRUCTION WASTE SHALL BE RECYCLE MATERIAL PER CGC 5.408.1.
2. TESTING AND ADJUSTING OF NEW SYSTEMS SHALL COMPLY AS OUTLINED IN CGC SECTION 5.410.4.
3. OPERATIONS AND MAINTENANCE SCHEDULE (O&M) AS LISTED IN CGC SECTION 5.410.4.5 SHALL BE DELIVERED TO THE BUILDING OWNER OR REPRESENTATIVE AND THE FACILITIES OPERATOR.
4. DURING CONSTRUCTION, ENDS OF DUCT OPENING SHALL BE SEALED, AND MECHANICAL EQUIPMENT SHALL BE COVERED. CGC 5.504.3.
5. VOC'S MUST COMPLY WITH THE LIMITATIONS LISTED IN SECTION 5.504.4 AND TABLES 5.504.4.1, 5.504.4.2, 5.504.4.3 AND 5.504.4.5 FOR: ADHESIVES, SEALANTS, PAINTS, AND COATINGS, CARPET AND COMPOSITION WOOD PRODUCTS. CGC 5.504 POLLUTANT CONTROL.
6. PRIOR TO FINAL APPROVAL OF THE BUILDING THE LICENSED CONTRACTOR, ARCHITECT OR ENGINEER IN RESPONSIBLE CHARGE OF THE OVERALL CONSTRUCTION MUST COMPLETE AND SIGN THE CITY APPROVED GREEN BUILDING STANDARDS CERTIFICATION FORM OR OTHER DOCUMENTATION REQUIRED BY THE CITY AND BE GIVEN TO THE BUILDING DEPARTMENT OFFICIAL PRIOR TO BUILDING FINAL APPROVAL.

EQUIPMENT ANCHORAGE & SEISMIC NOTES

MEP DISTRIBUTION SYSTEM BRACING NOTE FOR PIPING, DUCTWORK, AND ELECTRICAL CONDUIT:

PIPING, DUCTWORK, AND ELECTRICAL DISTRIBUTION SYSTEMS SHALL BE BRACED TO COMPLY WITH THE FORCES AND DISPLACEMENTS PRESCRIBED IN ASCE 7 SECTION 13.3 AS DEFINED IN ASCE 7 SECTIONS 13.6.5, 13.6.6, 13.6.7, AND 13.6.8; AND 2022 CBC, SECTIONS 1617A.1.24, 1617A.1.25 AND 1617A.1.26.

THE METHOD OF SHOWING BRACING AND ATTACHMENTS TO THE STRUCTURE FOR THE IDENTIFIED DISTRIBUTION
SYSTEMS ARE AS NOTED BELOW. THE MEP DESIGN PROFESSIONAL ENGINEER RESPONSIBLE FOR CONTENT ON THESE SHEETS HAS VERIFIED THAT THE DESIGN METHODS IDENTIFIED BELOW ARE IN ACCORDANCE WITH DSA IR 16-13.

MECHANICAL PIPING (MP), MECHANICAL DUCTS (MD), PLUMBING PIPING (PP), ELECTRICAL DISTRIBUTION SYSTEMS (E):

MP	MD	PP	E	
☐	☐	☐	☐	OPTION 1: PROJECT-SPECIFIC DESIGN.
☒	☒	☒	☒	OPTION 2: DESIGN BASED ON OSHPD OPM 0052-13 , WITHIN PROJECT SUBMITTAL
☐	☐	☐	☐	OPTION 3: DESIGN BASED ON OSHPD OPM, DEFERRED SUBMITTAL

NO.	DATE	DRAWN	REVISIONS -	CHK'D	APP'D
A	3/20/25	-	30 % CONCEPT DESIGN		
B	4/25/25	-	FINAL CONCEPT DESIGN		
C	7/18/25	-	40 % DESIGN		

NOT FOR CONSTRUCTION

NO.	DATE	DRAWN	REVISIONS -	CHK'D	APP'D

80% DESIGN REVIEW
SEP 19, 2025

Jacobs
2600 MICHELSON DRIVE, SUITE 500
IRVINE, CA 92612
T: (949) 224-7500
F: (949) 224-7501

IDS
IDS GROUP
1 PETERS CANYON ROAD, SUITE 130
IRVINE, CA 92606
TEL: 949-387-8500, FAX: 949-387-0800

REGISTERED PROFESSIONAL ENGINEER
DARREN B. SMITH
No. 30841
Exp. 12/31/26
MECHANICAL
STATE OF CALIFORNIA

SCALE: AS SHOWN
DRAWN: D. THAI
CHECKED: D. SMITH
DESIGNED: R. MAGNO
ENGINEER / ARCHITECT

TERMINAL ISLAND MARITIME SUPPORT FACILITY

GENERAL NOTES

THE PORT OF LOS ANGELES
ENGINEERING DIVISION
425 S. PALOS VERDES STREET SAN PEDRO CA 90731-3309

DRAWING NUMBER 1-3513
SHEET NUMBER PL-02

RVT:
DATE:

ELECTRIC WATER HEATER

SYMBOL	SERVICE	LOCATION	TANK CAPACITY GALLONS	MANUFACTURER & MODEL NO.	ELECTRICAL KW	V	PH	Hz	AMP BRKR	EWT DG °F	LWT DG °F	GPH RECOVERY @ 90°F RISE	TANK SIZE DIA X HEIGHT	OPER. WT. (LBS)	REMARKS
WH 1	HOT WATER HEATER	JANITOR	50	RHEEM HEAT PUMP PRO TERRA XE5DT10HS45UO	4.5	208/240	1	60	30	60	140	27	20-1/4"x62"	600	PROVIDE VITRI-GLASS LINING, DESIGN CERTIFIED TO NSF/ANSI 372, TEMP./ PRESS. RELIEF VALVE, 3/4" CONDENSATE DRAIN CONNECTION.

HOT WATER RETURN PUMP SCHEDULE

SYMBOL	MANUFACTURER AND MODEL NO.	LOCATION	SERVICE	CAPACITY GPM	CAPACITY HEAD TDH	CAPACITY WATTS (MIN.-MAX.)	MOTOR V	MOTOR PH	MOTOR HZ	REMARKS
CP 1	GRUNDFOS MAGNA 3	JANITOR	HOT WATER RETURN	5	15	9-110	115	1	60	SINGLE HEAD STAINLESS STEEL ROTATED FLANGE WITH CORPORATE PUMP WITH BUILT-IN PRESSURE AND TEMP. SENSOR.

EXPANSION TANK SCHEDULE

SYMBOL	SERVICE	LOCATION	MANUFACTURER AND MODEL NO.	MAXIMUM OPERATING PRESSURE PSI	MAXIMUM ACCEPTANCE VOLUME (GAL.)	TANK DIAMETER (INCHES)	TANK HEIGHT (INCHES)	OPER. WT. (LBS)	REMARKS
ET 1	EWH-1	JANITOR	AMTROL THERM-X-TROL ST-5C	150	2	8	14	25	MAX. OPERATING TEMPERATURE 200°F.

AIR COMPRESSOR SCHEDULE

SYMBOL	NAME AND BRAND	MODEL	TANK CAPCITY (GAL.)	ELECTRICAL HP	ELECTRICAL V	ELECTRICAL PH	PHYSICAL DIMENSIONS (LxWxH) (IN.)	MAX. OPER. PRESS. PSI	ACFM @ 100 PSI	OPER. WT. (LBS)	REMARK
A 1	ATLAS COPCO	CR7.5-CRS1 230/1-120HD-IS-N4	120	15 (7.5x2)	460	3	79x34x54	175	48.6	1300	PROVIDE REGULATOR / FILTER, RF-1.

REGULATOR / FILTER SCHEDULE

SYMBOL	NAME AND BRAND	MODEL	MAX. INLET PRESSURE (PSI)	FLOW CAPACITY - 1" PORT	REMARK
RF 1	INGERSOLL RAND	P39464-614	250	250 SCFM @ 100 PSI	

SAND AND OIL SEPARATOR

SYMBOL	MANUFACTURER & MODEL No.	CAPACITY (GALLON)	PIPE SIZE	PHYSICAL DIMENSIONS (LxWxH)	OPER. WT. (LBS)	REMARK
ST 1	JENSEN JZ-5000-EBE-SO	5000	4"	199"x92"x96"	39,099	PROVIDE WITH 2' x 2' x 2'H SAMPLE BOX

HOT WATER CALCULATION

BUILDING TYPE OF FIXTURE	QTY.	AVERAGE GALLON OF HW PER HR	TOTAL GALLON USED IN 1 HOUR
BASIN, PUBLIC LAVATORY	4	2	8
SERVICE SINK	1	20	20
TOTAL PEAK HOUR DEMAND			28
GPH REQUIRED (60%)			20

FIXTURE UNIT

FLOOR PLAN NEW	TYPE OF FIXTURE	CW FU PER FIXTURE	TOTAL CW FU UNITS	SOIL/WASTE FU PER FIXTURE	TOTAL SOIL/WASTE FU UNITS
4	WATER CLOSET	5	20	4	16
4	LAVATORY	1	4	2	8
1	SERVICE SINK	3	3	3	3
TOTAL FIXTURE UNITS			27		27

PIPE SIZE SCHEDULE

PIPE MATTERIAL: TYPE "L" COPPER

PRESSURE LOSS: 6.00 PSI/100FT.

	FLUSH TANK	FLUSH VALVE	
PIPE SIZE INCHES	HOT WATER (5FT/S)	COLD WATER TK (8FT/S)	COLD WATER FV (8FT/S)
1/2"	2	2	0
3/4"	8	8	0
1"	16	20	0
1 1/4"	28	42	8
1 1/2"	46	83	26
2"	119	254	132
2 1/2"	245	455	329
3"	406	719	666
4"	840	1668	1668

PLUMBING FIXTURE AND EQUIPMENT SCHEDULE

ITEM	FIXTURE	ROUGH-IN CONNECTIONS WASTE	VENT	HOT WATER	COLD WATER	DESCRIPTION
WC-1	WATER CLOSET (ADA)	4"	2" (1)	--	1"	SEE ARCHITECTURAL SPECIFICATION, 1.28 GPF SELF-SUSTAINING SEAT AND BOLT CAPS. SEE ARCH. DRAWING FOR ADA MOUNTING HEIGHT.
L-1	LAVATORY (ADA)	2"	1 -1/2" (3)	--	1/2"	SEE ARCHITECTURAL SPECIFICATION, 0.35 GPM DELTA 33T301 P-TRAP WITH TRUBRO LAVGUARD 2 102 EZ ADA COMPLIANT UNDERLAV PROTECTION. PROVIDE THERMOSTATIC MIXING VALVE DELTA NO. R2570-MIXLF. SEE ARCH. DRAWING FOR ADA MOUNTING DETAIL.
SS-1	SERVICE SINK	3"	2" (1)	1/2"	1/2"	AMERICAN STANDARD FLORWELL NO. 7745.811 ENAMELED CAST IRON FLOOR MOUNTED CORNER SERVICE SINK INCLUDING NO.7721.038 FLAT GRID DRAIN, DELTA FAUCET 28T9 WITH INTEGRAL STOP TOP BRACED FAUCET , 3" IPS DRAIN STRAINER, WALL MOUNTED. COMPLETE WITH PAIL HOOK AND WALL BRACE, WALL BRACE, VACUUM BREAKER.
FCO	FLOOR CLEAN-OUT	SEE PLAN	--	--	--	MIFAB C1000-TOS-3 STAINLESS STEEL FLOOR CLEANOUT WITH ADJUSTABLE COVER.
WCO	WALL CLEAN-OUT	SEE PLAN	--	--	--	MIFAB C1460-RD CAST IRON FLOOR CLEANOUT WITH STAINLESS STEEL ACCESS COVER.
HB-1	HOSE BIBB	--	--	--	3/4"	WATTS # SC8-1, HOSE BIBB WITH INTEGRAL VACUUM BREAKER.
TD-1	TRENCH DRAIN	SEE PLAN	--	--	--	JOSAM PRO-PLUG 100C SERIES CHANNELS SHALL BE 39.4 LONG.
QD-1	QUICK DISCONNECT	SEE PLAN	--	--	--	NORGREN IMI 233 SERIES, MODEL No. 233310028, QUICK DISCONNECT COUPLING, NICKEL PLATED BRASS BODY.
COTG	CLEAN-OUT TO GRADE	SEE PLAN	--	--	--	MIFAB C1170 HEAVY DUTY CLEANOUT. H-20 RATED COVER.

NOTES:
1. CLEANOUT INSTALLED ON VENT OVER FIXTURE.
2. REFER TO PLANS FOR FIXTURES REQUIRING CONDENSATE DRAIN TAILPIECE CONNECTION.
3. CLEANOUT INSTALLED ON WASTE PIPE BELOW P-TRAP.
4. REFER TO ARCHITECTURAL DRAWING FOR FIXTURE MOUNTING HEIGHT AND DIMENSIONS.

PIPE MATERIALS

SERVICES	LOCATION	MATERIAL	JOINING METHOD	REMARKS
DOMESTIC COLD & HOT WATER	UNDERGROUND	RIGID COPPER (TYPE K)	LEAD FREE BRAZED	ALL PIPE PENETRATION SHALL BE PROVIDED WITH PIPE SLEEVES IN COMPLIANCE WITH CPC 2022 312.0 AND 312.10.
	ABOVE GROUND	RIGID COPPER (TYPE L)	LEAD FREE SOLDERED	ALL PIPE PENETRATION SHALL BE PROVIDED WITH PIPE SLEEVES IN COMPLIANCE WITH CPC 2022 312.0 AND 312.10. HOT WATER IS INSULATED WITH 1-1/2" FIBERGLASS.
SANITARY WASTE/ SEWER	UNDERGROUND	PVC - SCHED 40	SOLVENT WELD	ALL PIPE PENETRATION SHALL BE PROVIDED WITH PIPE SLEEVES IN COMPLIANCE WITH CPC 2022 312.0 AND 312.10.
	ABOVE GROUND	CAST IRON SOIL PIPE & FITTINGS	HUBLESS	ALL PIPE PENETRATION SHALL BE PROVIDED WITH PIPE SLEEVES IN COMPLIANCE WITH CPC 2022 312.0 AND 312.10.
SANITARY VENT	UNDERGROUND	PVC - SCHED 40	SOLVENT WELD	ALL PIPE PENETRATION SHALL BE PROVIDED WITH PIPE SLEEVES IN COMPLIANCE WITH CPC 2022 312.0 AND 312.10.
	ABOVE GROUND (INDOOR)	CAST IRON SOIL PIPE & FITTINGS	HUBLESS	ALL PIPE PENETRATION SHALL BE PROVIDED WITH PIPE SLEEVES IN COMPLIANCE WITH CPC 2022 312.0 AND 312.10.
COMPRESSED AIR	ABOVE GROUND	ALUMINUM	PUSH TO CONNECT	ATLAS COPCO - AIRNET ALUMINUM PIPING SYSTEM, ASME B31.9.

NOTE:
1. ALL BRAZED AND SOLDERED JOINTS SHALL BE LEAD FREE. EXPOSED VENT PIPE SHALL BE GALVANIZED PER PLUMBING SPECIFICATIONS
2. ALL EXISTING CONDENSATE PIPING ABOVE CEILING SHALL BE PROVIDED WITH 1/2" ARMAFLEX INSULATION FOR CONDENSATION CONTROL.
3. ALL CAST IRON PIPES BELOW GRADE SHALL BE SPIRAL WRAPPED WITH 20 MIL. VISQUEEN TAPE.

NO.	DATE	DRAWN	REVISIONS -	CHK'D	APP'D
A	3/20/25	-	30 % CONCEPT DESIGN		
B	4/25/25	-	FINAL CONCEPT DESIGN		
C	7/18/25	-	40 % DESIGN		

NOT FOR CONSTRUCTION

80% DESIGN REVIEW SEP 19, 2025

Jacobs
2600 MICHELSON DRIVE, SUITE 500
IRVINE, CA 92612
T: (949) 224-7500
F: (949) 224-7501
IDS GROUP
LAUREN B. SMITH No. 30841 Exp. 12/31/26 MECHANICAL STATE OF CALIFORNIA
SCALE: AS SHOWN
DRAWN: D. THAI
CHECKED: D. SMITH
DESIGNED: R. MAGNO
ENGINEER / ARCHITECT

TERMINAL ISLAND MARITIME SUPPORT FACILITY

SCHEDULES

THE PORT OF LOS ANGELES
ENGINEERING DIVISION
425 S. PALOS VERDES STREET SAN PEDRO CA 90731-3309

DRAWING NUMBER 1-3513

SHEET NUMBER PL-03

RVT:
DATE:

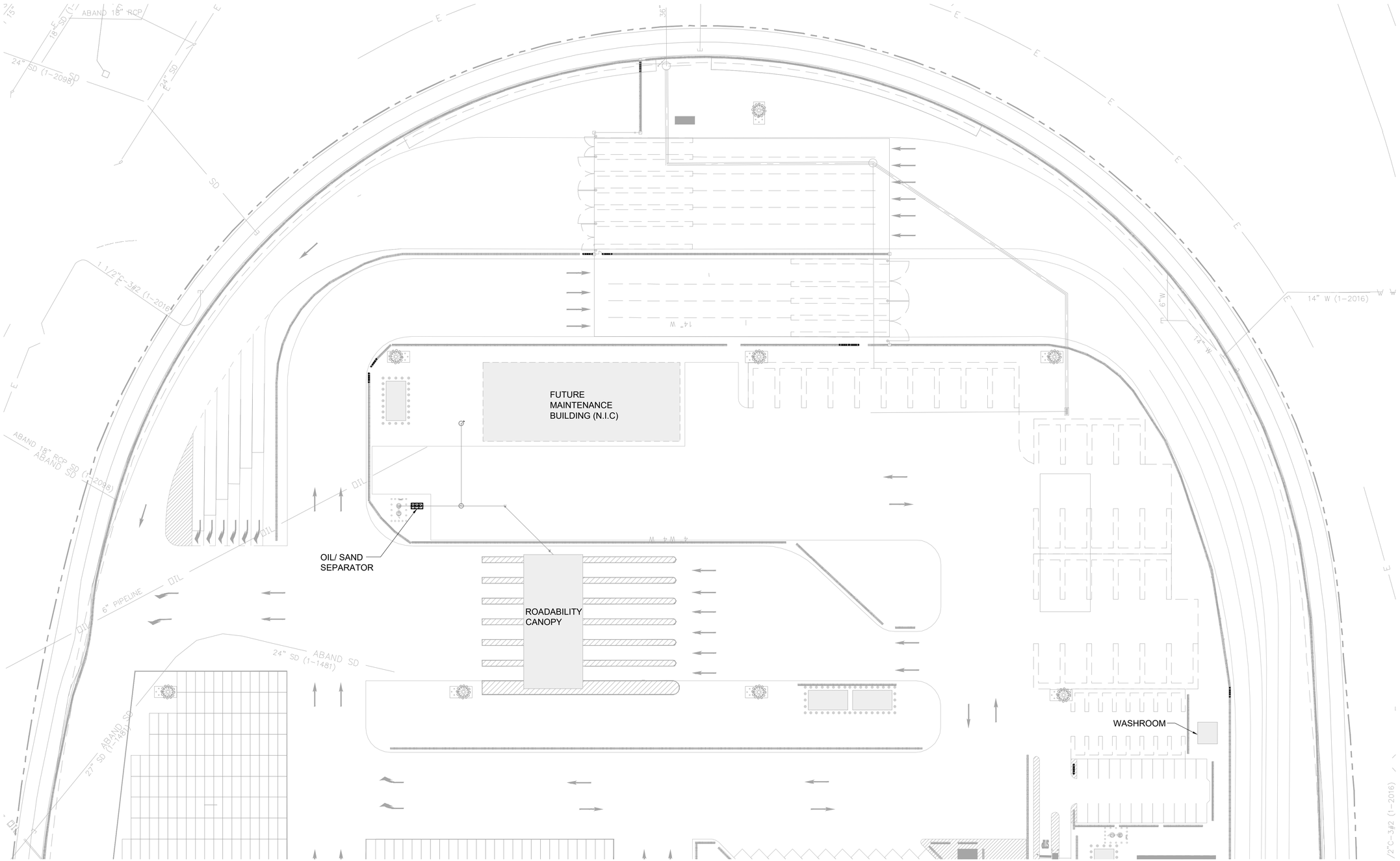
ABAND 18" RCP
18" SD (1-2098)
24" SD (1-2098)
SD
24" SD
36"
E
E
E

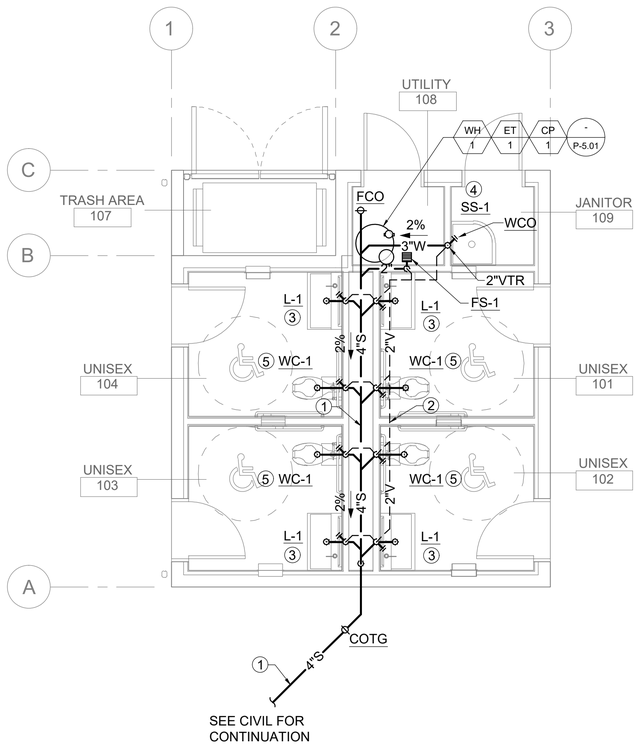

PLUMBING WASTE & VENT

SCALE: 1/4" = 1'-0"

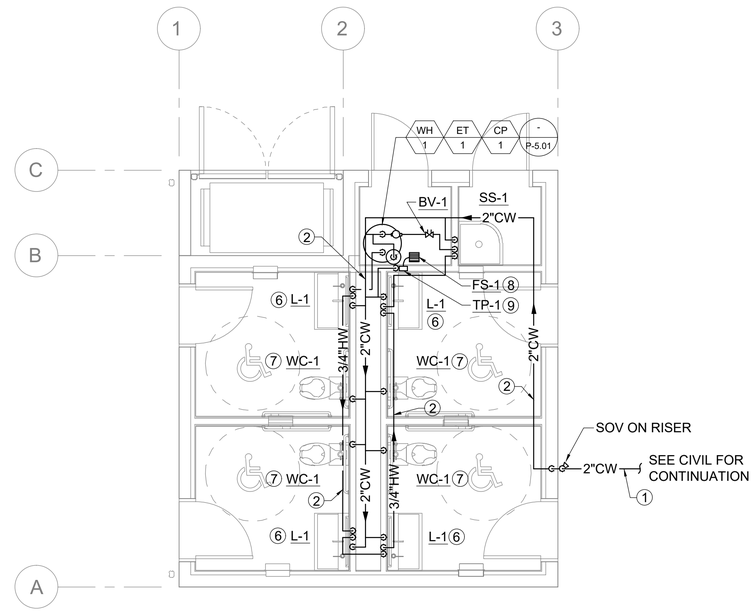

PLUMBING DOMESTIC WATER

SCALE: 1/4" = 1'-0"

KEYNOTES

1. PIPING BELOW FLOOR / GRADE.
2. PIPING ABOVE CEILING.
3. ROUGH-IN 2"W, 1-1/2"V AND CONNECT TO FIXTURE.
4. ROUGH-IN 3"W, 2"V AND CONNECT TO FIXTURE.
5. ROUGH-IN 4"W, 2"V AND CONNECT TO FIXTURE.
6. ROUGH-IN 1/2"CW, 1/2"HW AND CONNECT TO FIXTURE.
7. ROUGH-IN 1-1/2"CW AND CONNECT TO FIXTURE.
8. ROUGH-IN 1/2"CW AND CONNECT TO FIXTURE.
9. PROVDE WALL ACCESS PANEL.

NO.	DATE	DRAWN	REVISIONS -	CHK'D	APP'D
A	3/20/25	-	30 % CONCEPT DESIGN		
B	4/25/25	-	FINAL CONCEPT DESIGN		
C	7/18/25	-	40 % DESIGN		

NOT FOR CONSTRUCTION

NO.	DATE	DRAWN	REVISIONS -	CHK'D	APP'D

80% DESIGN REVIEW
SEP 19, 2025

Jacobs
2600 MICHELSON DRIVE, SUITE 500
IRVINE, CA 92612
T: (949) 224-7500
F: (949) 224-7501

IDS
IDS GROUP

SCALE: AS SHOWN
DRAWN: D. THAI
CHECKED: D. SMITH
DESIGNED: R. MAGNO
ENGINEER / ARCHITECT

TERMINAL ISLAND MARITIME SUPPORT FACILITY

PLUMBING FLOOR PLAN - WASHROOM

THE PORT OF LOS ANGELES
ENGINEERING DIVISION
425 S. PALOS VERDES STREET SAN PEDRO CA 90731-3309

DRAWING NUMBER: 1-3513
SHEET NUMBER: PL-05

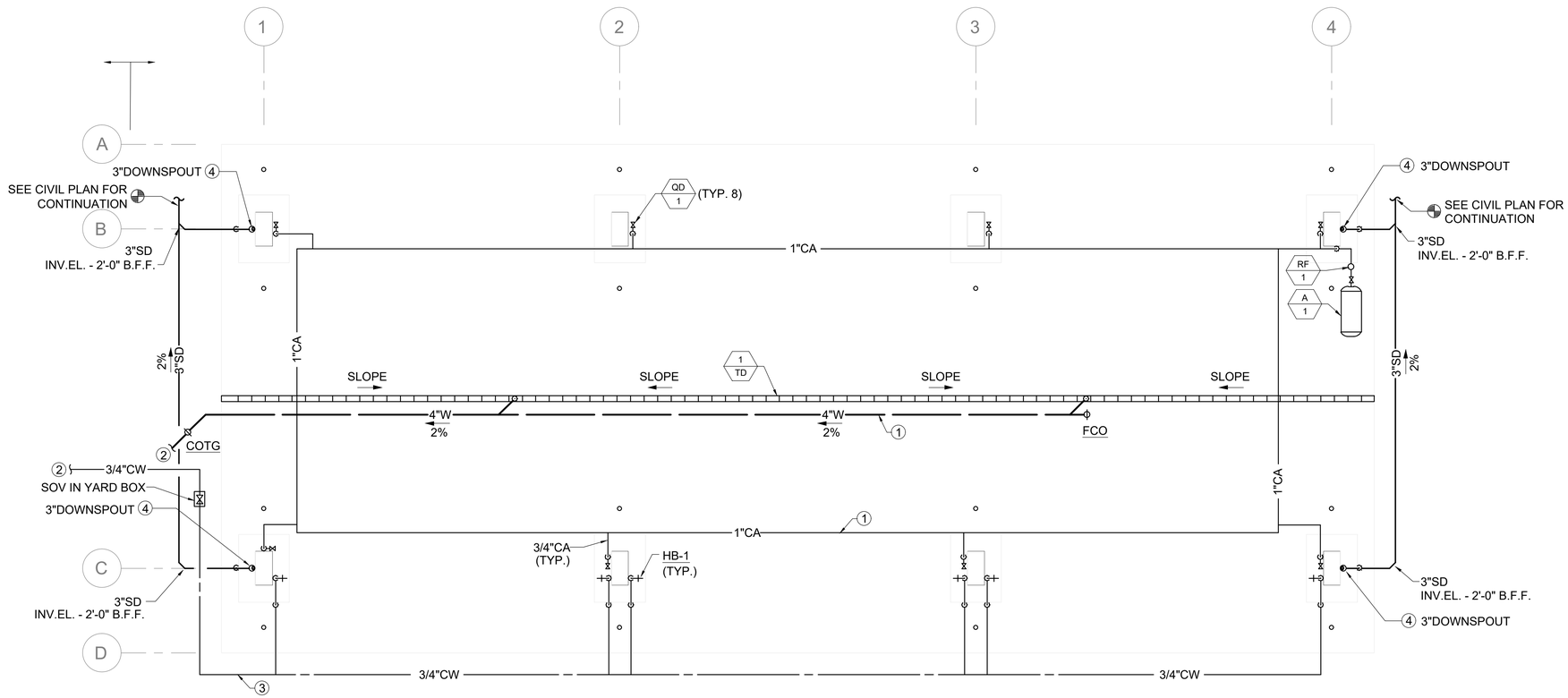

KEYNOTES

1. PIPING OVERHEAD.
2. SEE CIVIL PLAN FOR CONTINUATION.
3. PIPING UNDERGROUND.
4. 3" DOWNSPOUT FROM ROOF GUTTER. SEE ARCHITECTURAL DRAWINGS.

PLUMBING FLOOR PLAN - ROADABILITY CANOPY

SCALE: 1/8" = 1'-0"

N

NO.	DATE	DRAWN	REVISIONS -	CHK'D	APP'D
A	3/20/25	-	30 % CONCEPT DESIGN		
B	4/25/25	-	FINAL CONCEPT DESIGN		
C	7/18/25	-	40 % DESIGN		

NOT FOR CONSTRUCTION

80% DESIGN REVIEW
SEP 19, 2025

Jacobs
2600 MICHELSON DRIVE, SUITE 500
IRVINE, CA 92612
T: (949) 224-7500
F: (949) 224-7501
IDS GROUP

REGISTERED PROFESSIONAL ENGINEER DARREN B. SMITH No. 30847 Exp. 12/31/26 MECHANICAL STATE OF CALIFORNIA

SCALE:	AS SHOWN
DRAWN:	D. THAI
CHECKED:	D. SMITH
DESIGNED:	R. MAGNO

ENGINEER / ARCHITECT

TERMINAL ISLAND MARITIME SUPPORT FACILITY

PLUMBING FLOOR PLAN - ROADABILITY CANOPY

THE PORT OF LOS ANGELES
ENGINEERING DIVISION
425 S. PALOS VERDES STREET SAN PEDRO CA 90731-3309

DRAWING NUMBER 1-3513

SHEET NUMBER PL-06

RVT:
DATE:

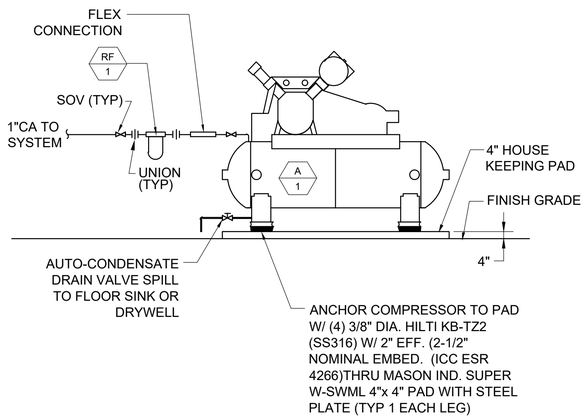

AIR COMPRESSOR SUPPORT | NO SCALE | 8

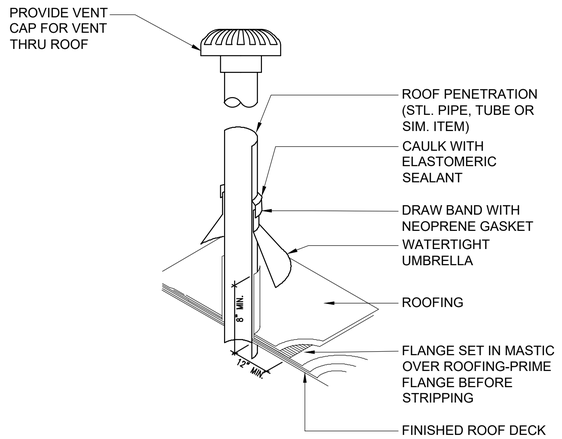

VENT THRU ROOF | NO SCALE | 6

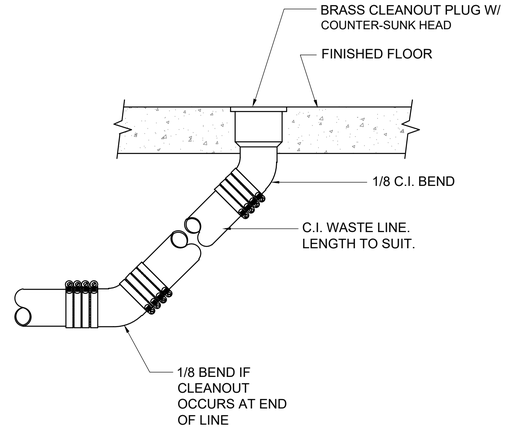

FLOOR CLEAN-OUT | NO SCALE | 4

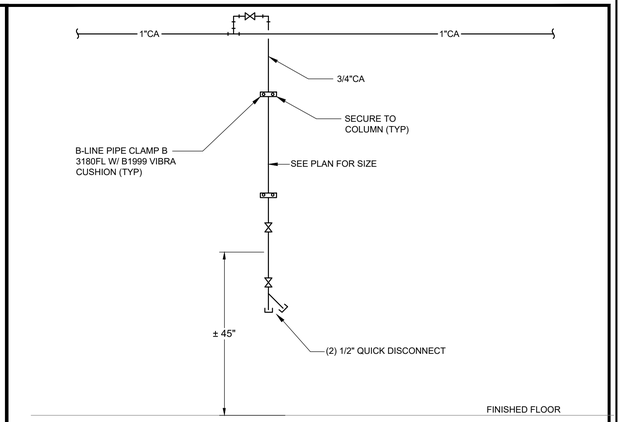

COMPRESSED AIR OUTLET | NO SCALE | 2

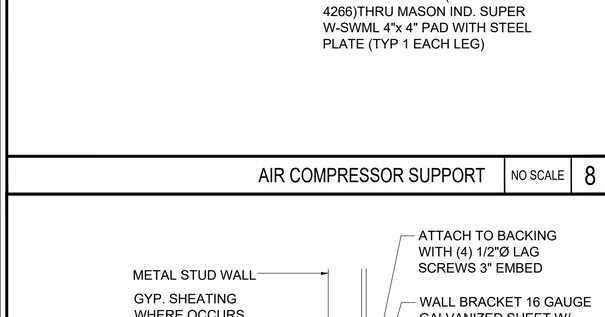

DETAIL BACKING

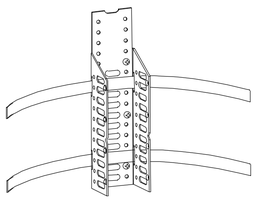

QUICK STRAP MODEL QS-5

EXPANSION TANK SUPPORT | NO SCALE | 7

HANGER ROD SPACING SCHEDULE	
PIPE SIZE NOMINAL DIAMETER	HANGER ROD SPACING
1/2"Ø	6'-0"
3/4"Ø	7'-0"
1"Ø	7'-0"
1 1/4"Ø	9'-0"
1 1/2"Ø	10'-0"
2"Ø	10'-0"

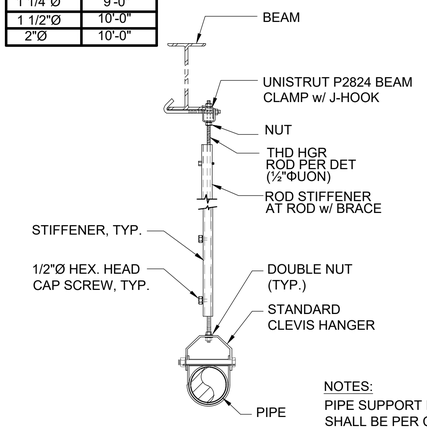

NOTES:
PIPE SUPPORT INTERVALS SHALL BE PER CPC 2022 CHAPTER 3, TABLE 313.3. BRACING AND LONGITUDINAL SUPPORT AT EVERY 40 FEET. MAX. SUPPORT LOAD 1000 LBS.

PIPE HANGER SUPPORT | NO SCALE | 5

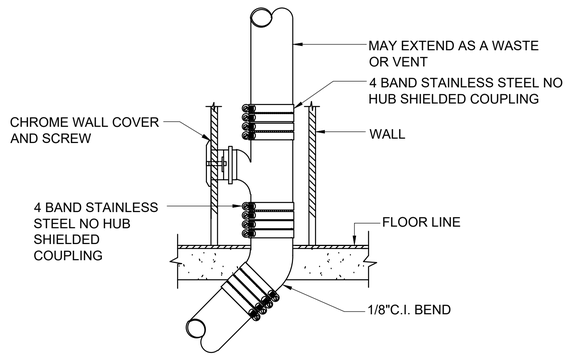

NOTES:
1. BALANCE OF PIPING SAME AS CLEANOUT TO GRADE.
2. VERTICAL SUPPORT:
   AT EACH FLOOR, NOT TO EXCEED TO 15 FEET.
3. HORIZONTAL SUPPORT:
   EVERY OTHER JOINT UNLESS OVER 4 FEET THEN SUPPORT EACH JOINT.

WALL CLEAN-OUT | NO SCALE | 3

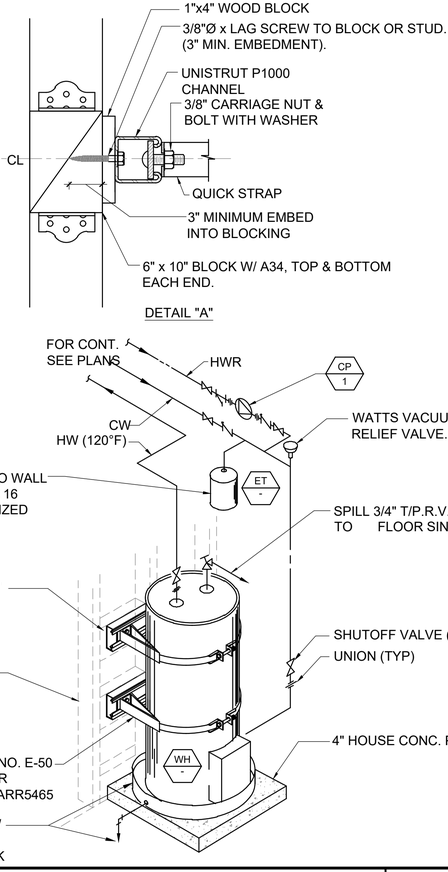

ELECTRIC WATER HEATER | NO SCALE | 1

NO.	DATE	DRAWN	REVISIONS -	CHK'D	APP'D
A	3/20/25	-	30 % CONCEPT DESIGN		
B	4/25/25	-	FINAL CONCEPT DESIGN		
C	7/18/25	-	40 % DESIGN		

NOT FOR CONSTRUCTION

NO.	DATE	DRAWN	REVISIONS -	CHK'D	APP'D

80% DESIGN REVIEW SEP 19, 2025

Jacobs
2600 MICHELSON DRIVE, SUITE 500
IRVINE, CA 92612
T: (949) 224-7500
F: (949) 224-7501
IDS GROUP
LICENSED PROFESSIONAL ENGINEER DARREN B. SMITH No. 30842 Exp. 12/31/26 MECHANICAL STATE OF CALIFORNIA

SCALE:	AS SHOWN
DRAWN:	D. THAI
CHECKED:	D. SMITH
DESIGNED:	R. MAGNO
	ENGINEER / ARCHITECT

TERMINAL ISLAND MARITIME SUPPORT FACILITY

PLUMBING DETAILS

THE PORT OF LOS ANGELES
ENGINEERING DIVISION
425 S. PALOS VERDES STREET SAN PEDRO CA 90731-3309

DRAWING NUMBER: 1-3513
SHEET NUMBER: PL-07

RVT:
DATE:

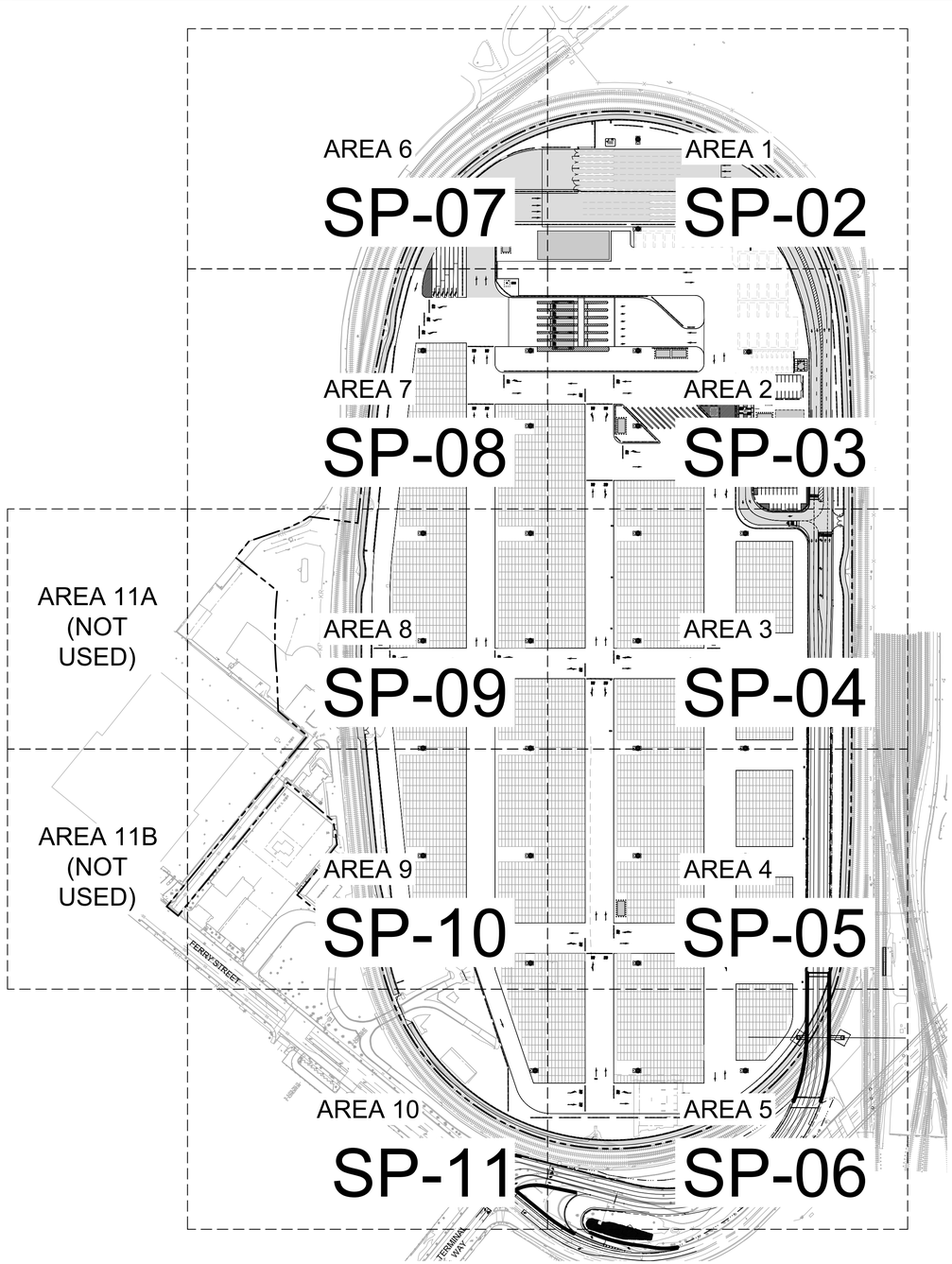

1SP-01 / SP-01 STRIPING, SIGNAGE & FENCING KEY PLAN

SCALE: 1" = 200'

N

GENERAL STRIPING & FENCING NOTES:

1. TRAFFIC CONTROL SHALL BE IN ACCORDANCE WITH THE LATEST CALIFORNIA MANUAL OF UNIFORM TRAFFIC CONTROL DEVICES (MUTCD WATCH MANUAL). WORK SHALL NOT BEGIN UNTIL TRAFFIC CONTROL PLANS ARE APPROVED BY ENGINEER. PLANS MUST BE STAMPED BY A CALIFORNIA REGISTERED CIVIL AND/OR TRAFFIC ENGINEER.

2. CONSTRUCT AND MAINTAIN TEMPORARY FENCE ALONG PROJECT SITE LIMITS FOR THE DURATION OF CONTRACT.

3. REMOVE TEMPORARY TRAFFIC CONTROL, MARKOUT, AND INSTALL STRIPING, PAVEMENT MARKINGS, CURB MARKINGS, AND SIGNS AS SHOWN ON DRAWINGS. REMOVAL OF MARKINGS SHALL BE PERFORMED BEFORE MARKOUT AND INSTALLATION OF NEW STRIPING BY SANDBLASTING/GRINDING IN ACCORDANCE WITH LADOT SPECIFICATION NO. 76-016-10. MARKOUT SHALL BE BY HEAVY PAINT BRUSH MARKINGS OR SPRAY PAINT OVER A PULLED ROPE IN THE RESPECTIVE WHITE OR YELLOW COLORS OF THE PROPOSED STRIPING. STRIPING AND PAVEMENT MARKINGS WITHIN PARKING LOTS AND NEW WATER STREET SHALL BE IN PAINT PER CALTRANS STANDARD SPECIFICATION SECTIONS 84-3 AND 85. STRIPING AND PAVEMENT MARKINGS SHOWN IN B-PERMIT BR-600528 SHEET SP-01 SHALL BE IN HOT APPLIED ALKYD THERMOPLASTIC IN ACCORDANCE WITH LADOT SPECIFICATIONS NOS. 51-005-10 AND 76-012-15.

4. THE INSTALLATION OF THERMOPLASTIC PAINT MAY PROCEED ONLY AFTER INSPECTION AND APPROVAL OF MARKOUT BY ENGINEER. CORRECT ERRORS IN MARKOUT REQUESTED BY ENGINEER. UPON APPROVAL OF MARKOUT, INSTALL THE PAINT, PAVEMENT MARKINGS, (CURB MARKINGS AND SIGNS - AS APPLICABLE) WITHIN THE FOLLOWING THREE POINTS IN TIME AND FOR THE FOLLOWING PURPOSES:
   A. TEN (10) WORKING DAYS IN ADVANCE OF MARKOUT
   B. UPON COMPLETION OF MARKOUT (INCLUDING ANY MARKOUT CORRECTIONS) FOR INSPECTION AND APPROVAL.
   C. UPON COMPLETION OF PAINT STRIPING (INCLUDING ANY PAINT STRIPING CORRECTIONS) FOR INSPECTION AND FINAL STRIPING APPROVAL.

5. DURING PHASES OF CONSTRUCTION, MAINTAIN TEMPORARY RAISED OVERLAY PAVEMENT MARKERS ADJACENT TO ANY TEMPORARY CENTERLINE, MARKOUT CENTERLINE, OR SCAR OF SANDBLASTED CENTERLINE, AS APPLICABLE AS PER LADOT STANDARD PLAN NO. S-453.0.

6. INSTALL CONTINENTAL CROSSWALK(S) PER LADOT STD. DWG. NO. S-481.1.

7. INSTALL SIGN AND POSTS PER LADOT STD. DWG. NO. S-452.0.

STRIPING, SIGNAGE & FENCING CONSTRUCTION NOTES:

LEGEND OF CONSTRUCTION NOTES

- COORDINATE
- CONSTRUCT
- EXISTING
- REMOVE
- NOT IN CONTRACT
- REMODEL EXISTING
- REMOVE AND CONSTRUCT
- RELOCATE
- ABANDON

No.	CONSTRUCTION ITEM	REFERENCE DWG
201	PAVEMENT MARKINGS - ARROWS	CT STD PLAN A24A, A24B
202	PAVEMENT MARKINGS - SYMBOLS AND NUMERALS	CT STD PLAN A24C
203	PAVEMENT MARKINGS - WORDS	CT STD PLAN A24D, A24E
204	PAVEMENT MARKINGS - CROSSWALKS	CT STD PLAN A24F
205	12" SOLID WHITE LINE	
207	ADA PARKING STALLS	CT STD PLAN A90A, A90B or DETAIL
208	4" DOUBLE YELLOW LINE	
210	4" WHITE DASHED LINE	
211	4" WHITE LINE BORDERS AND 4" WHITE LINE DIAGONALS AT 36" MAX OC	
212	PARKING STALLS	
213	4" WHITE SOLID LINE	
216	4" YELLOW SOLID LINE	
219	6" WHITE SOLID LINE	
220	CONTAINER STACK STRIPING	
221	YELLOW DIAGONAL CROSSHATCH MARKINGS	
222	4" LANE LINE EXTENSION	
223	4" CENTER LINE EXTENSION	
224	TERMINAL VEHICLE PARKING STALL	X
226	RAISED CROSSWALK MARKINGS	LADOT STD PLAN S-483.0
235	DIAGONAL TRUCK PARKING STALL	X
237	SECURITY TURNSTILE	
238	FENCE, POST, AND FOUNDATION	
239	PEDESTRIAN GATE	
241	DOUBLE SWING GATE	
243	CHAIN LINK FENCING WITH BARBED WIRE	
245	CHAIN LINK FENCING ON K-RAIL WITH BARBED WIRE	
246	K-RAIL	
290	SIGN - "STOP", R1-1 (CA)	
291	SIGN - "20 MPH SPEED LIMIT", R2-1	
292	SIGN - "NO U-TURN", R3-4	
293	SIGN - "TRUCKS 3 AXLES OR MORE, RIGHT 2 LANES", R6-3A (CA)	
294	SIGN - "CHEVRON" SYMBOL, W1-8L	
295	SIGN - "YIELD", R1-2	
296	SIGN - "STOP SIGN AHEAD", W3-1	
297	SIGN - "LANE CONTROL, 1LT, 2THRU", R61-19	
298	SIGN - "MOVEMENT LANE CONTROL", R60B (CA)	

200' 0' 200' 400'

SCALE: 1" = 200'

NO.	DATE	DRAWN	REVISIONS -	CHK'D	APP'D
C	7/18/25	-	40% DESIGN		
D	9/19/25	-	80% DESIGN		

NOT FOR CONSTRUCTION

NO.	DATE	DRAWN	REVISIONS -	CHK'D	APP'D
			80% DESIGN REVIEW SEP 19 , 2025		

Jacobs
2600 MICHELSON DRIVE, SUITE 500
IRVINE, CA 92612
T: (949) 224-7500
F: (949) 224-7501

REGISTERED PROFESSIONAL ENGINEER — MICHAEL S. McAMIS — No. 60573 — CIVIL — STATE OF CALIFORNIA

SCALE:	1"=200'
DRAWN:	E. FLORES
CHECKED:	G. NGUYEN
DESIGNED:	S. MCAMIS
	ENGINEER / ARCHITECT

TERMINAL ISLAND MARITIME SUPPORT FACILITY

STRIPING, SIGNAGE & FENCING KEY PLAN AND NOTES

THE PORT OF LOS ANGELES
ENGINEERING DIVISION
425 S. PALOS VERDES STREET SAN PEDRO CA 90731-3309

DRAWING NUMBER	SHEET NUMBER
1-3513	SP-01

POLAPRO1_042023_BWD

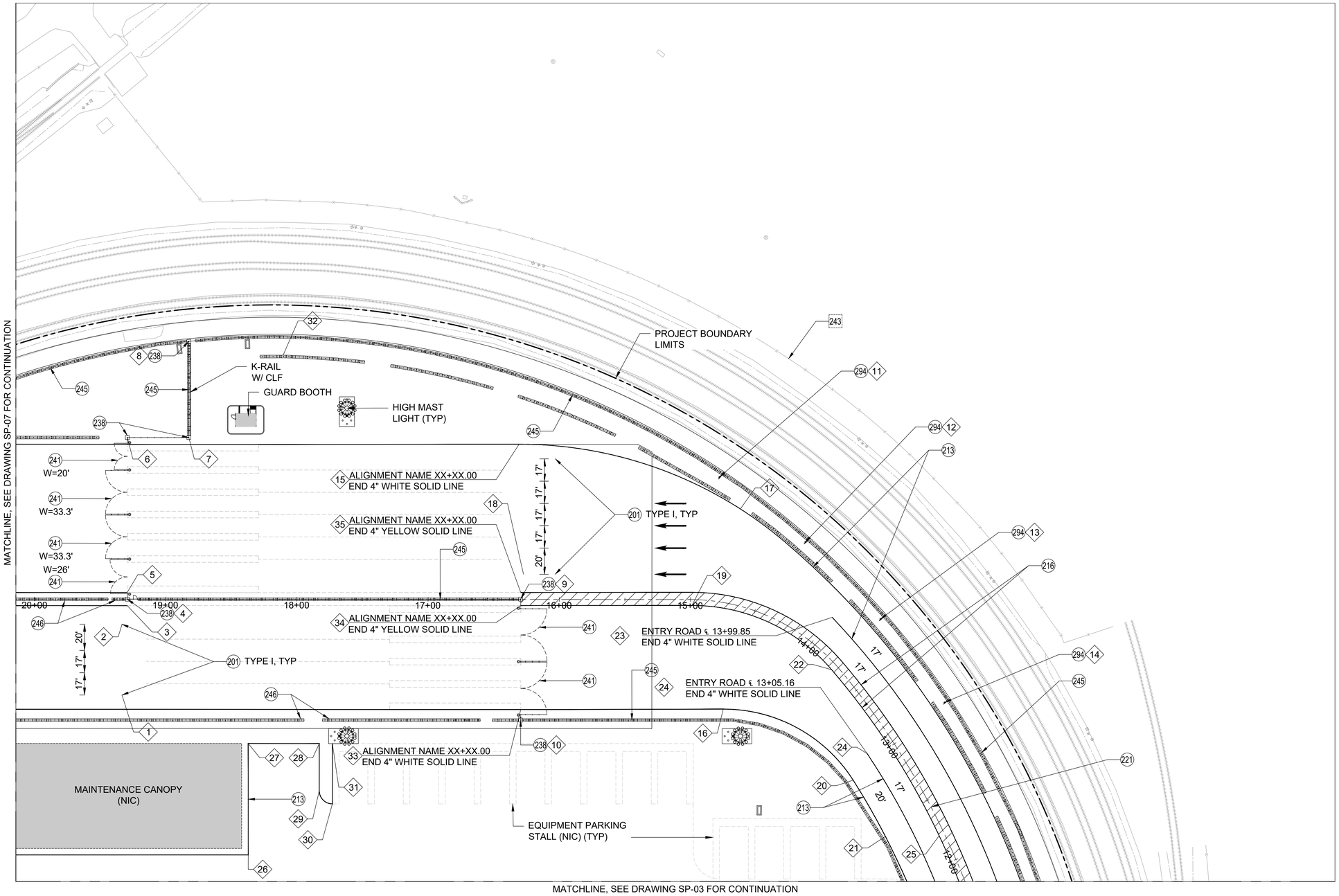

1SP-02 / SP-02 STRIPING, SIGNAGE & FENCING PLAN - AREA 1

SCALE: 1" = 40'

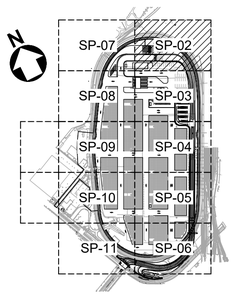

KEY MAP

40' 0' 40' 80'

SCALE: 1" = 40'

NO.	DATE	DRAWN	REVISIONS -	CHK'D	APP'D
C	7/18/25	-	40% DESIGN		
D	9/19/25	-	80% DESIGN		

NOT FOR CONSTRUCTION

NO.	DATE	DRAWN	REVISIONS -	CHK'D	APP'D
			80% DESIGN REVIEW SEP 19 , 2025		

Jacobs
2301 MICHELSON DRIVE, SUITE 300
IRVINE, CA 92612
T: (949) 224-7500
F: (949) 224-7501

REGISTERED PROFESSIONAL ENGINEER MICHAEL S. MCAMIS No. 60573 CIVIL STATE OF CALIFORNIA

SCALE: 1"=40'
DRAWN: E. FLORES
CHECKED: G. NGUYEN
DESIGNED: S. MCAMIS
ENGINEER / ARCHITECT

TERMINAL ISLAND MARITIME SUPPORT FACILITY

STRIPING, SIGNAGE & FENCING PLAN - AREA 1

THE PORT OF LOS ANGELES
ENGINEERING DIVISION
425 S. PALOS VERDES STREET SAN PEDRO CA 90731-3309

DRAWING NUMBER 1-3513

SHEET NUMBER SP-02

POLAPRO1_04/2023_BWD

MATCHLINE, SEE DRAWING SP-03 FOR CONTINUATION

MATCHLINE, SEE DRAWING SP-08 FOR CONTINUATION

MATCHLINE, SEE DRAWING SP-04 FOR CONTINUATION

ROADABILITY CANOPY

TYPE I, TYP

TYPE I

TYPE III (L)

TYPE III (R)

TYPE II (R)

TYPE II (L)

TYPE VII (R)

HIGH MAST LIGHT (TYP)

SUBSTATION (TYP)

RESTROOM

RESTROOM (NIC)

GUARD BOOTH

OFFICE (NIC)

PROJECT BOUNDARY LIMITS

ENTRY ROAD ℄ 13+99.22
END 4" WHITE DASHED LINE
BEGIN 4" WHITE SOLID LINE

ENTRY ROAD ℄ 5+81.98
END 4" WHITE SOLID LINE
BEGIN 4" WHITE DASHED LINE

ENTRY ROAD ℄ 5+32.00
END 4" CENTER LINE EXTENSION
BEGIN 4" YELLOW SOLID LINE

ENTRY ROAD ℄ 5+32.00
END 4" LANE LINE EXTENSION
BEGIN 4" WHITE DASHED LINE

ALIGNMENT NAME XX+XX.00
END 4" LANE LINE EXTENSION
BEGIN 4" WHITE SOLID LINE

KEY MAP

SP-07 SP-02 SP-08 SP-03 SP-09 SP-04 SP-10 SP-05 SP-11 SP-06

40' 0' 40' 80'

SCALE: 1" = 40'

1SP-03 / SP-03 STRIPING, SIGNAGE & FENCING PLAN - AREA 2

SCALE: 1" = 40'

NO.	DATE	DRAWN	REVISIONS -	CHK'D	APP'D
C	7/18/25	-	40% DESIGN		
D	9/19/25	-	80% DESIGN		

NOT FOR CONSTRUCTION

NO.	DATE	DRAWN	REVISIONS -	CHK'D	APP'D

80% DESIGN REVIEW
SEP 19 , 2025

Jacobs
2001 MICHELSON DRIVE, SUITE 500
IRVINE, CA 92612
T: (949) 224-7500
F: (949) 224-7501

REGISTERED PROFESSIONAL ENGINEER
MICHAEL S. MCAMIS
No. 60573
CIVIL
STATE OF CALIFORNIA

SCALE:	1"=40'
DRAWN:	E. FLORES
CHECKED:	G. NGUYEN
DESIGNED:	S. MCAMIS
	ENGINEER / ARCHITECT

TERMINAL ISLAND MARITIME SUPPORT FACILITY

STRIPING, SIGNAGE & FENCING PLAN - AREA 2

THE PORT OF LOS ANGELES
ENGINEERING DIVISION
425 S. PALOS VERDES STREET SAN PEDRO CA 90731-3309

DRAWING NUMBER: 1-3513

SHEET NUMBER: SP-03

POLAPRO1_04/2023_BWD

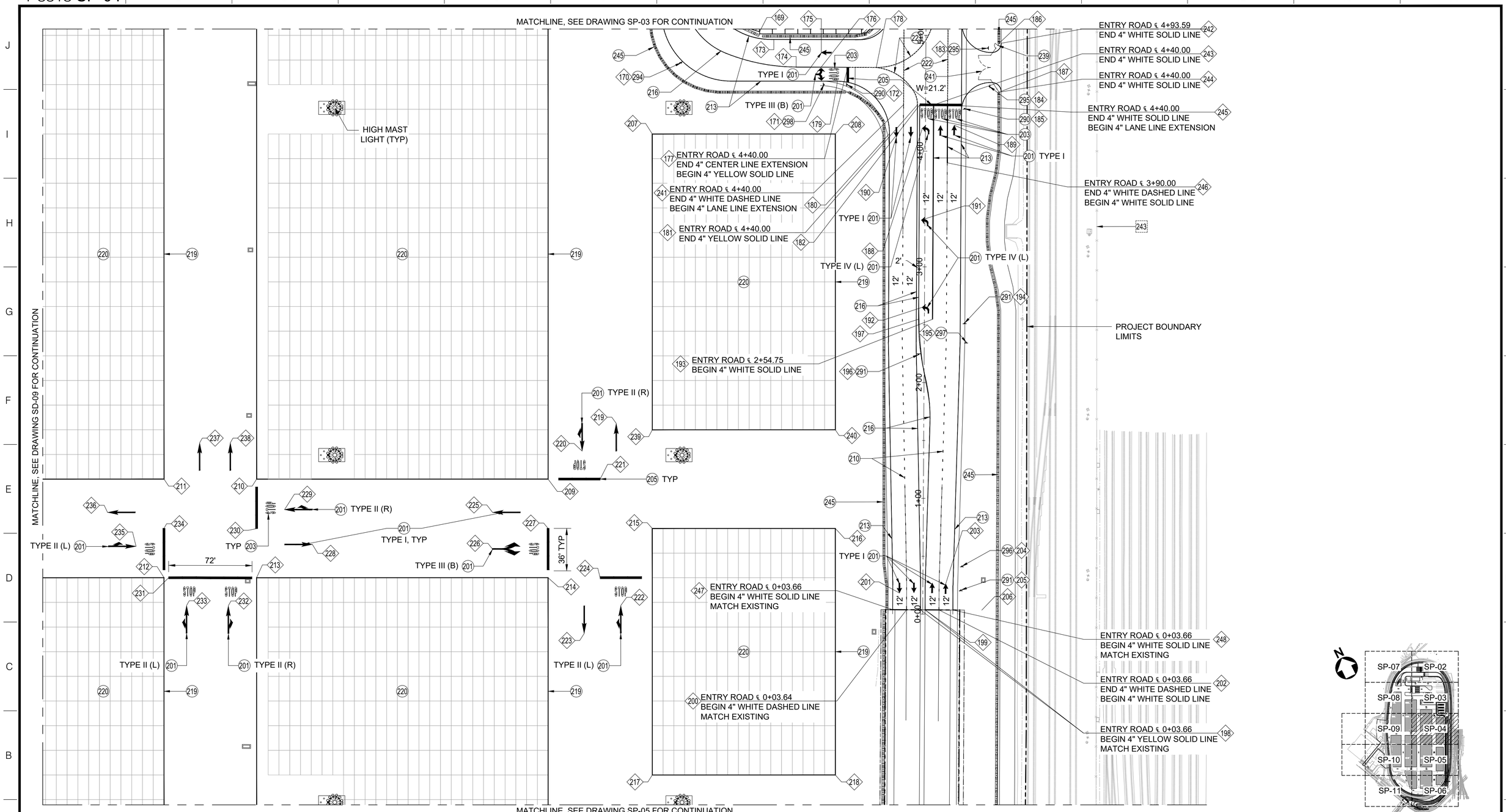

KEY MAP

40' 0' 40' 80'

SCALE: 1" = 40'

1SP-04 / SP-04 STRIPING, SIGNAGE & FENCING PLAN - AREA 3

SCALE: 1" = 40'

NO.	DATE	DRAWN	REVISIONS -	CHK'D	APP'D
C	7/18/25	-	40% DESIGN		
D	9/19/25	-	80% DESIGN		

NOT FOR CONSTRUCTION

NO.	DATE	DRAWN	REVISIONS -	CHK'D	APP'D

80% DESIGN REVIEW
SEP 19 , 2025

Jacobs
2600 MICHELSON DRIVE, SUITE 500
IRVINE, CA 92612
T: (949) 224-7500
F: (949) 224-7501

REGISTERED PROFESSIONAL ENGINEER
MICHAEL S. MCAMIS
No. 60573
CIVIL
STATE OF CALIFORNIA

SCALE: 1"=40'
DRAWN: E. FLORES
CHECKED: G. NGUYEN
DESIGNED: S. MCAMIS
ENGINEER / ARCHITECT

TERMINAL ISLAND MARITIME SUPPORT FACILITY

STRIPING, SIGNAGE & FENCING PLAN - AREA 3

THE PORT OF LOS ANGELES
ENGINEERING DIVISION
425 S. PALOS VERDES STREET SAN PEDRO CA 90731-3309

DRAWING NUMBER 1-3513
SHEET NUMBER SP-04

POLAPRO1_04/2023_BWD

MATCHLINE, SEE DRAWING SP-04 FOR CONTINUATION

MATCHLINE, SEE DRAWING SP-10 FOR CONTINUATION

MATCHLINE, SEE DRAWING SP-06 FOR CONTINUATION

SUBSTATION

HIGH MAST LIGHT (TYP)

PROJECT BOUNDARY LIMITS

TYPE II (R)

TYPE I, TYP

TYPE II (L)

TYPE III (B)

TYP

36' TYP

72'

STOP

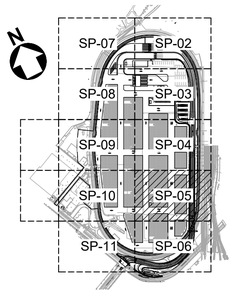

KEY MAP

40' 0' 40' 80'

SCALE: 1" = 40'

1SP-05 / SP-05

STRIPING, SIGNAGE & FENCING PLAN - AREA 4

SCALE: 1" = 40'

NO.	DATE	DRAWN	REVISIONS -	CHK'D	APP'D
C	7/18/25	-	40% DESIGN		
D	9/19/25	-	80% DESIGN		

NOT FOR CONSTRUCTION

80% DESIGN REVIEW
SEP 19 , 2025

Jacobs
2600 MICHELSON DRIVE, SUITE 500
IRVINE, CA 92612
T: (949) 224-7500
F: (949) 224-7501

REGISTERED PROFESSIONAL ENGINEER
MICHAEL S. McAMIS
No. 60573
CIVIL
STATE OF CALIFORNIA

SCALE: 1"=40'
DRAWN: E. FLORES
CHECKED: G. NGUYEN
DESIGNED: S. MCAMIS
ENGINEER / ARCHITECT

TERMINAL ISLAND MARITIME SUPPORT FACILITY

STRIPING, SIGNAGE & FENCING PLAN - AREA 4

THE PORT OF LOS ANGELES
ENGINEERING DIVISION
425 S. PALOS VERDES STREET SAN PEDRO CA 90731-3309

DRAWING NUMBER 1-3513

SHEET NUMBER SP-05

POLAPR21_043023_BWD

MATCHLINE, SEE DRAWING SP-05 FOR CONTINUATION

MATCHLINE, SEE DRAWING SP-11 FOR CONTINUATION

TYPE III (L) 201

TYP 203

TYPE III (R) 201

TYP 205

TYPE I, TYP 224

72'

36'

HIGH MAST LIGHT (TYP)

TERMINAL ISLAND GRADE SEPARATION (NIC) SEE DRAWING 1-3497

PROJECT BOUNDARY LIMITS

TERMINAL WAY

1SP-06
SP-06

STRIPING, SIGNAGE & FENCING PLAN - AREA 5

SCALE: 1" = 40'

KEY MAP

SP-07 SP-02 SP-08 SP-03 SP-09 SP-04 SP-10 SP-05 SP-11 SP-06

40' 0' 40' 80'

SCALE: 1" = 40'

NO.	DATE	DRAWN	REVISIONS -	CHK'D	APP'D
C	7/18/25	-	40% DESIGN		
D	9/19/25	-	80% DESIGN		

NOT FOR CONSTRUCTION

80% DESIGN REVIEW SEP 19 , 2025

Jacobs
2600 MICHELSON DRIVE, SUITE 500
IRVINE, CA 92612
P: (949) 224-7500
F: (949) 224-7501

REGISTERED PROFESSIONAL ENGINEER MICHAEL S. McAMIS No. 60573 CIVIL STATE OF CALIFORNIA

SCALE: 1"=40'
DRAWN: E. FLORES
CHECKED: G. NGUYEN
DESIGNED: S. MCAMIS
ENGINEER / ARCHITECT

TERMINAL ISLAND MARITIME SUPPORT FACILITY

STRIPING, SIGNAGE & FENCING PLAN - AREA 5

THE PORT OF LOS ANGELES
ENGINEERING DIVISION
425 S. PALOS VERDES STREET SAN PEDRO CA 90731-3309

DRAWING NUMBER 1-3513

SHEET NUMBER SP-06

POLAPRO1_040223_BWD

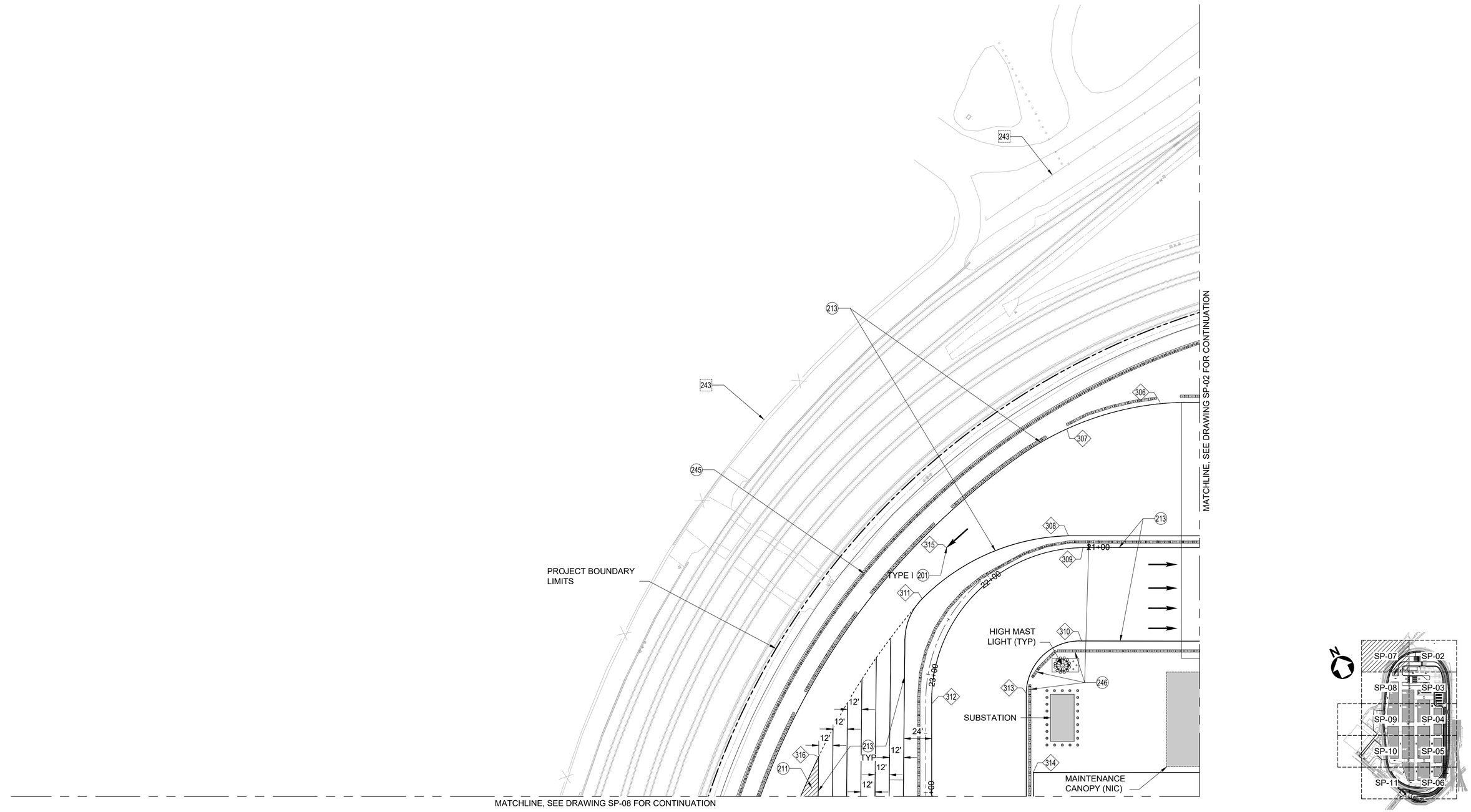

1SP-07
SP-07

STRIPING, SIGNAGE & FENCING PLAN - AREA 6

SCALE: 1" = 40'

KEY MAP

40' 0' 40' 80'

SCALE: 1" = 40'

NO.	DATE	DRAWN	REVISIONS -	CHK'D	APP'D
C	7/18/25	-	40% DESIGN		
D	9/19/25	-	80% DESIGN		

NOT FOR CONSTRUCTION

NO.	DATE	DRAWN	REVISIONS -	CHK'D	APP'D

80% DESIGN REVIEW
SEP 19 , 2025

Jacobs
2600 MICHELSON DRIVE, SUITE 500
IRVINE, CA 92612
T (949) 224-7500
F (949) 224-7501

REGISTERED PROFESSIONAL ENGINEER
MICHAEL S. MCAMIS
No. 60573
CIVIL
STATE OF CALIFORNIA

SCALE:	1"=40'
DRAWN:	E. FLORES
CHECKED:	G. NGUYEN
DESIGNED:	S. MCAMIS
	ENGINEER / ARCHITECT

TERMINAL ISLAND MARITIME SUPPORT FACILITY

STRIPING, SIGNAGE & FENCING PLAN - AREA 6

THE PORT OF LOS ANGELES
ENGINEERING DIVISION
425 S. PALOS VERDES STREET SAN PEDRO CA 90731-3309

DRAWING NUMBER	SHEET NUMBER
1-3513	SP-07

POLAPRO1_040223_BWD

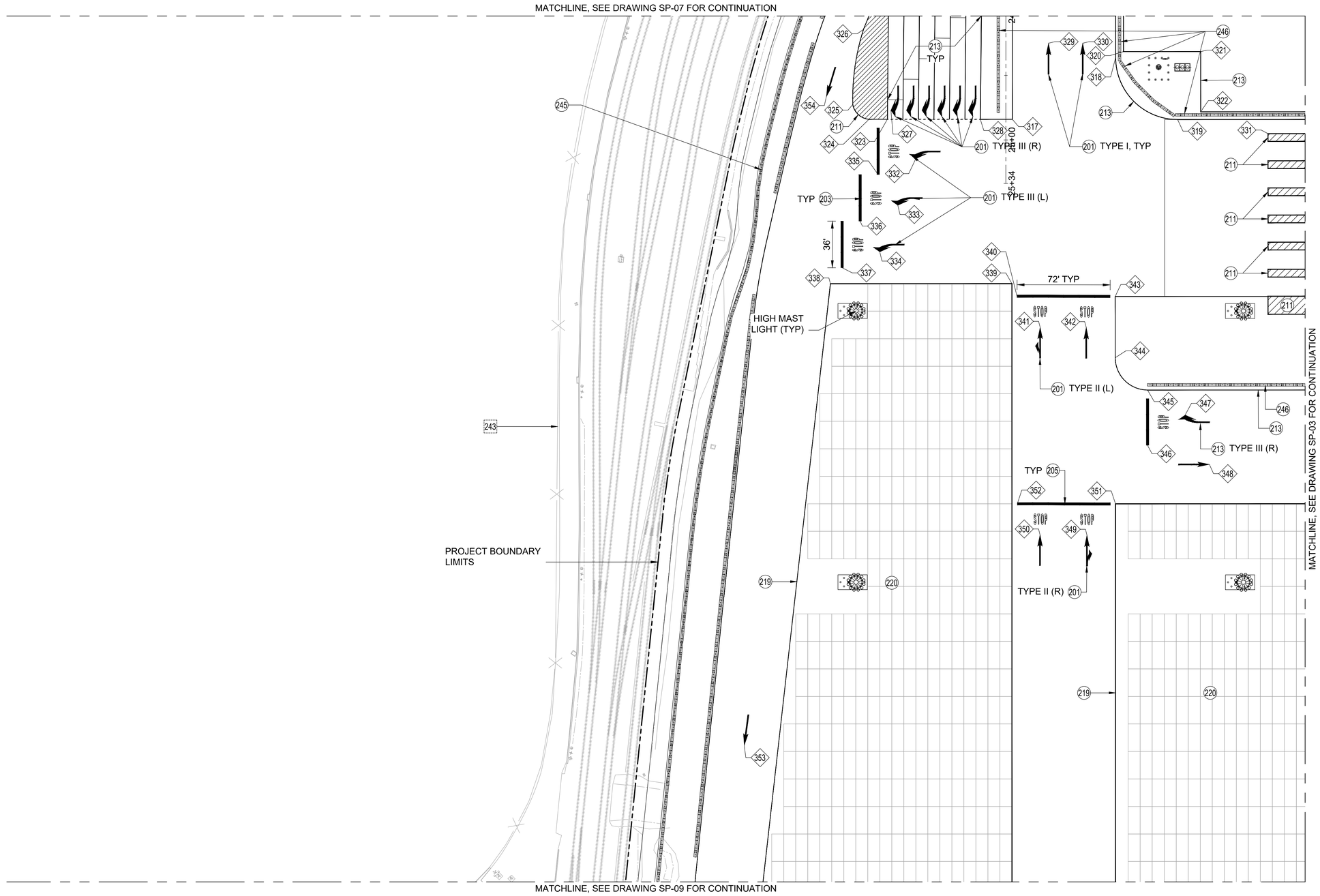

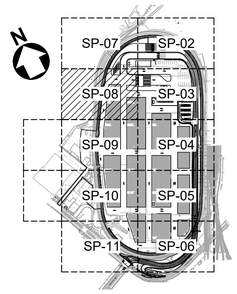

KEY MAP

40' 0' 40' 80'

SCALE: 1" = 40'

1SP-08 / SP-08 STRIPING, SIGNAGE & FENCING PLAN - AREA 7

SCALE: 1" = 40'

NO.	DATE	DRAWN	REVISIONS -	CHK'D	APP'D
C	7/18/25	-	40% DESIGN		
D	9/19/25	-	80% DESIGN		

NOT FOR CONSTRUCTION

NO.	DATE	DRAWN	REVISIONS -	CHK'D	APP'D
			80% DESIGN REVIEW SEP 19 , 2025		

Jacobs
2600 MICHELSON DRIVE, SUITE 500
IRVINE, CA 92612
T: (949) 224-7500
F: (949) 224-7501

REGISTERED PROFESSIONAL ENGINEER MICHAEL S. MCAMIS No. 60573 CIVIL STATE OF CALIFORNIA

SCALE:	1"=40'
DRAWN:	E. FLORES
CHECKED:	G. NGUYEN
DESIGNED:	S. MCAMIS
	ENGINEER / ARCHITECT

TERMINAL ISLAND MARITIME SUPPORT FACILITY

STRIPING, SIGNAGE & FENCING PLAN - AREA 7

THE PORT OF LOS ANGELES
ENGINEERING DIVISION
425 S. PALOS VERDES STREET SAN PEDRO CA 90731-3309

DRAWING NUMBER	SHEET NUMBER
1-3513	SP-08

POLAPRO1_04.0223_BWD

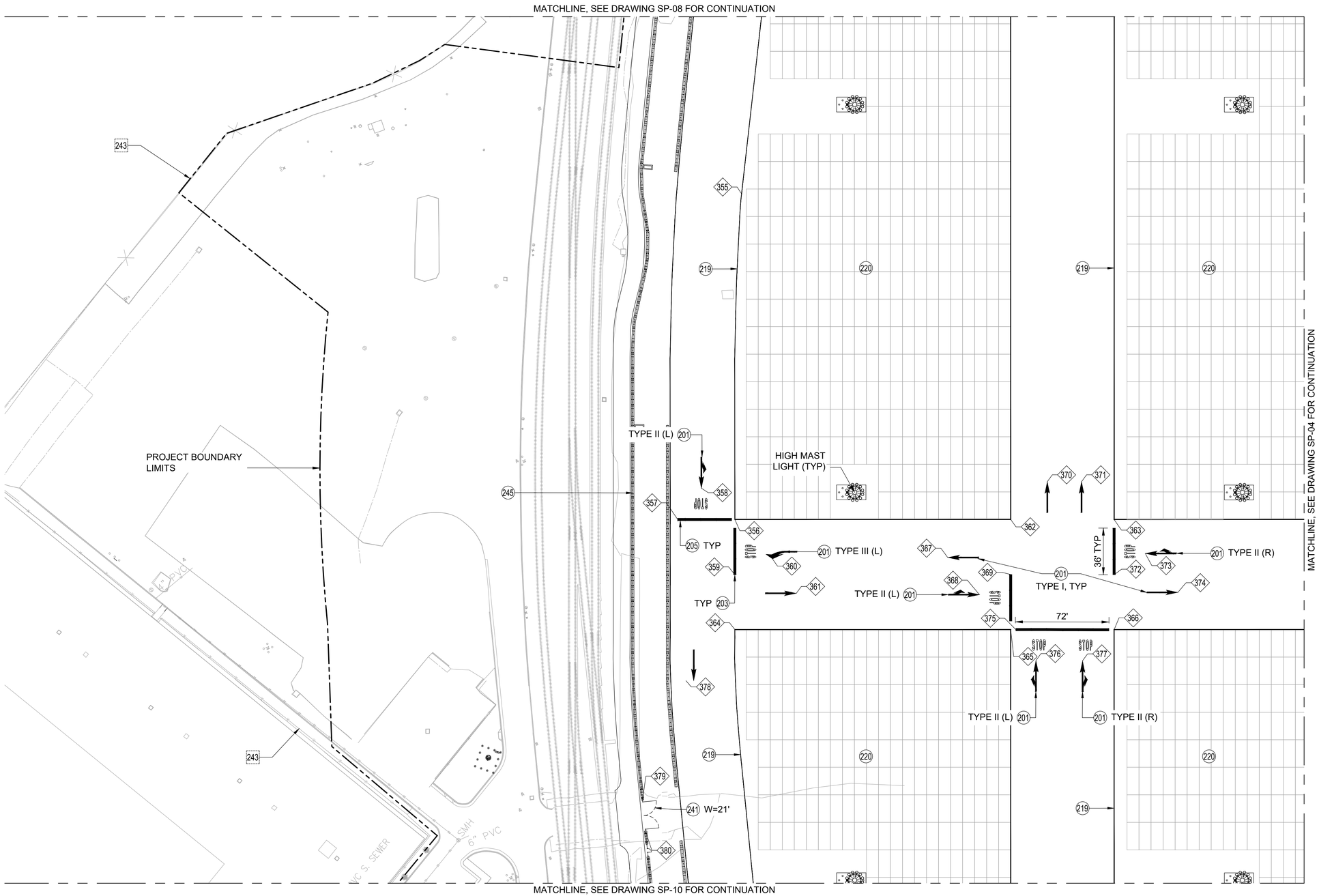

1SP-09
SP-09

STRIPING, SIGNAGE & FENCING PLAN - AREA 8

SCALE: 1" = 40'

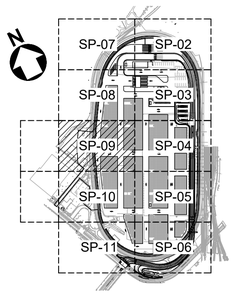

KEY MAP

40' 0' 40' 80'

SCALE: 1" = 40'

NO.	DATE	DRAWN	REVISIONS -	CHK'D	APP'D
C	7/18/25	-	40% DESIGN		
D	9/19/25	-	80% DESIGN		

NOT FOR CONSTRUCTION

NO.	DATE	DRAWN	REVISIONS -	CHK'D	APP'D

80% DESIGN REVIEW
SEP 19 , 2025

Jacobs
2600 MICHELSON DRIVE, SUITE 500
IRVINE, CA 92612
T: (949) 224-7500
F: (949) 224-7501

REGISTERED PROFESSIONAL ENGINEER
MICHAEL S. McAMIS
No. 60573
CIVIL
STATE OF CALIFORNIA

SCALE: 1"=40'
DRAWN: E. FLORES
CHECKED: G. NGUYEN
DESIGNED: S. MCAMIS
ENGINEER / ARCHITECT

TERMINAL ISLAND MARITIME SUPPORT FACILITY

STRIPING, SIGNAGE & FENCING PLAN - AREA 8

THE PORT OF LOS ANGELES
ENGINEERING DIVISION
425 S. PALOS VERDES STREET SAN PEDRO CA 90731-3309

DRAWING NUMBER 1-3513
SHEET NUMBER SP-09

POLAPRO1_04/2023_BWD

MATCHLINE, SEE DRAWING SP-09 FOR CONTINUATION

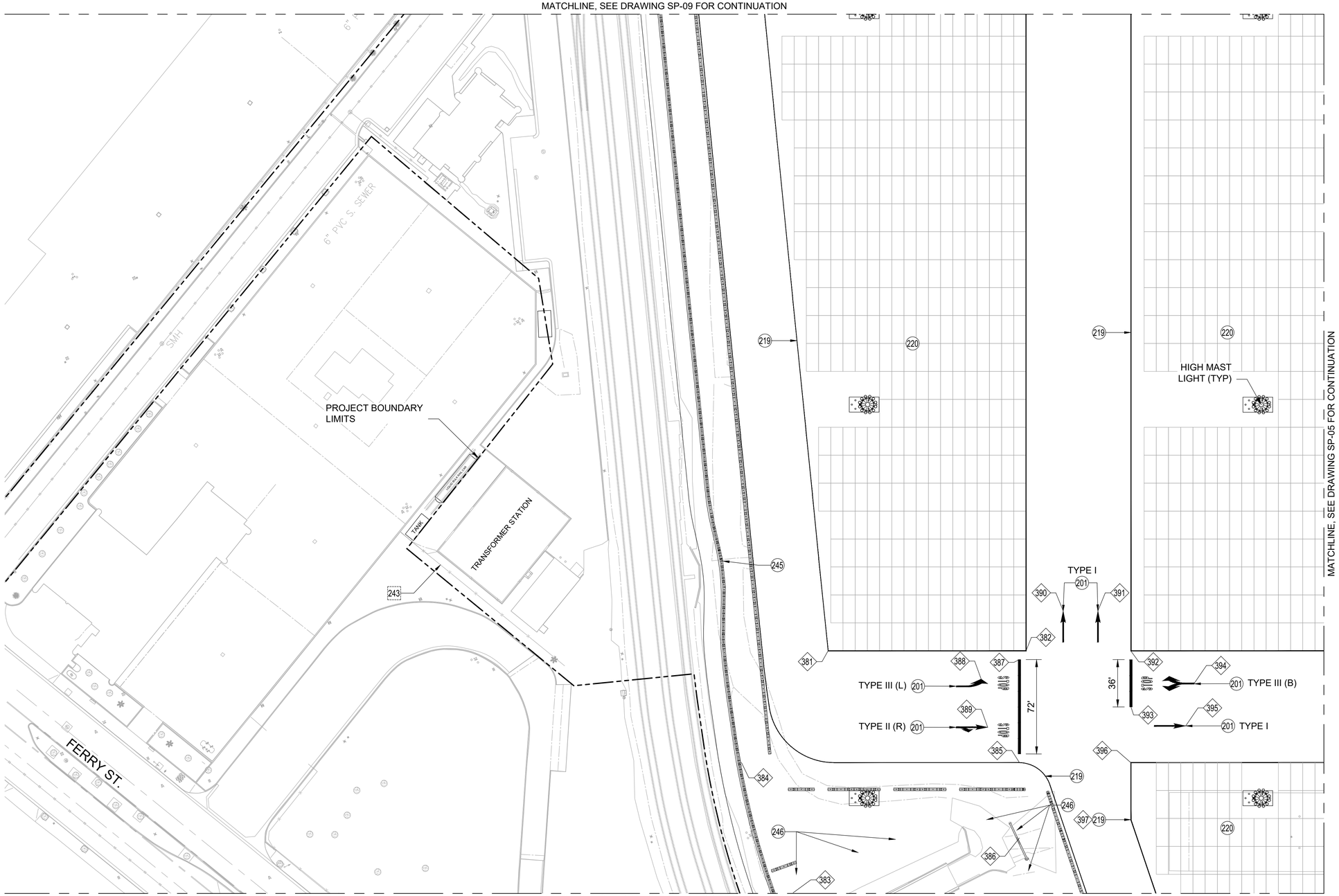

MATCHLINE, SEE DRAWING SP-11 FOR CONTINUATION

1SP-10 / SP-10 STRIPING, SIGNAGE & FENCING PLAN - AREA 9

SCALE: 1" = 40'

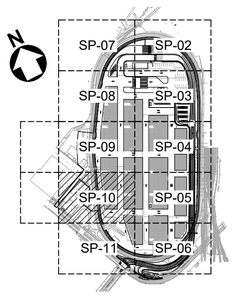

KEY MAP

40' 0' 40' 80'

SCALE: 1" = 40'

NO.	DATE	DRAWN	REVISIONS -	CHK'D	APP'D
C	7/18/25	-	40% DESIGN		
D	9/19/25	-	80% DESIGN		

NOT FOR CONSTRUCTION

NO.	DATE	DRAWN	REVISIONS -	CHK'D	APP'D

80% DESIGN REVIEW
SEP 19 , 2025

Jacobs
2041 MICHELSON DRIVE, SUITE 500
IRVINE, CA 92612
T: (949) 224-7500
F: (949) 224-7501

REGISTERED PROFESSIONAL ENGINEER — MICHAEL S. MCAMIS — No. 60573 — CIVIL — STATE OF CALIFORNIA

SCALE: 1"=40'
DRAWN: E. FLORES
CHECKED: G. NGUYEN
DESIGNED: S. MCAMIS
ENGINEER / ARCHITECT

TERMINAL ISLAND MARITIME SUPPORT FACILITY

STRIPING, SIGNAGE & FENCING PLAN - AREA 9

THE PORT OF LOS ANGELES
ENGINEERING DIVISION
425 S. PALOS VERDES STREET SAN PEDRO CA 90731-3309

DRAWING NUMBER 1-3513

SHEET NUMBER SP-10

POLAPRO1_04/2023_BWD

MATCHLINE, SEE DRAWING SP-10 FOR CONTINUATION

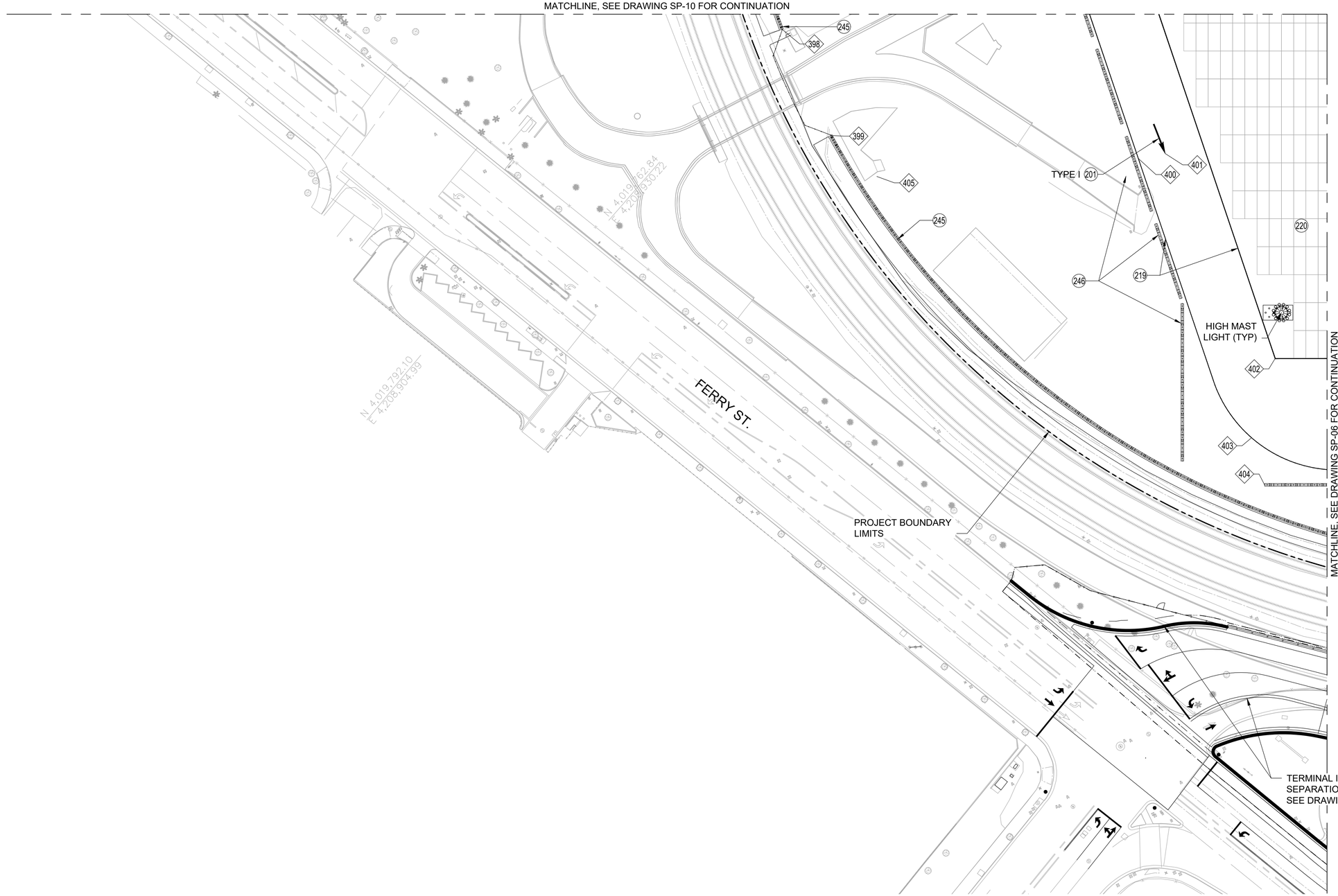

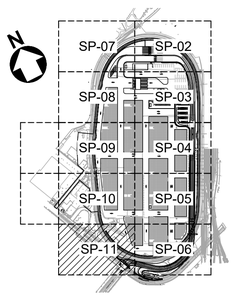

KEY MAP

40' 0' 40' 80'

SCALE: 1" = 40'

1SP-11 / SP-11 STRIPING, SIGNAGE & FENCING PLAN - AREA 10

SCALE: 1" = 40'

N

NO.	DATE	DRAWN	REVISIONS -	CHK'D	APP'D
C	7/18/25	-	40% DESIGN		
D	9/19/25	-	80% DESIGN		

NOT FOR CONSTRUCTION

NO.	DATE	DRAWN	REVISIONS -	CHK'D	APP'D
			80% DESIGN REVIEW SEP 19 , 2025		

Jacobs
2301 MICHELSON DRIVE, SUITE 850
IRVINE, CA 92612
T: (949) 224-7500
F: (949) 224-7501

REGISTERED PROFESSIONAL ENGINEER
MICHAEL S. MCAMIS
No. 60573
CIVIL
STATE OF CALIFORNIA

SCALE: 1"=40'
DRAWN: E. FLORES
CHECKED: G. NGUYEN
DESIGNED: S. MCAMIS
ENGINEER / ARCHITECT

TERMINAL ISLAND MARITIME SUPPORT FACILITY

STRIPING, SIGNAGE & FENCING PLAN - AREA 10

THE PORT OF LOS ANGELES
ENGINEERING DIVISION
425 S. PALOS VERDES STREET SAN PEDRO CA 90731-3309

DRAWING NUMBER 1-3513

SHEET NUMBER SP-11

POLAPRO1_04/2023_BWD

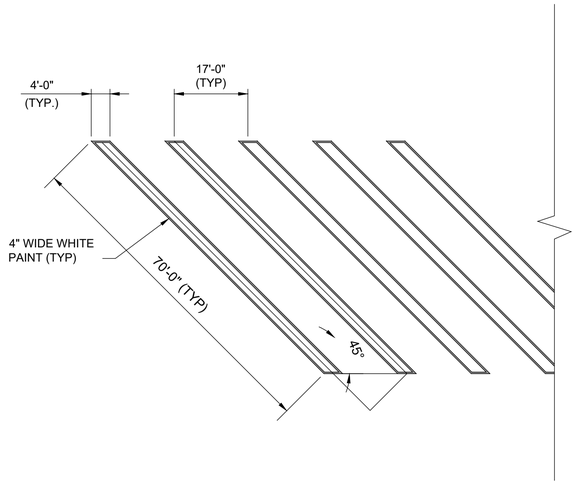

1SP-12 / SP-03 DIAGONAL TRUCK PARKING PAVEMENT MARKING DETAIL
SCALE: NTS

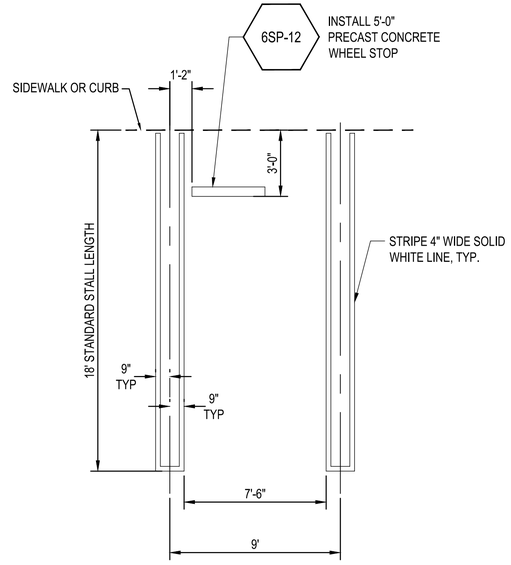

2SP-12 / SP-03 STANDARD PARKING STALL DETAIL
SCALE: NTS

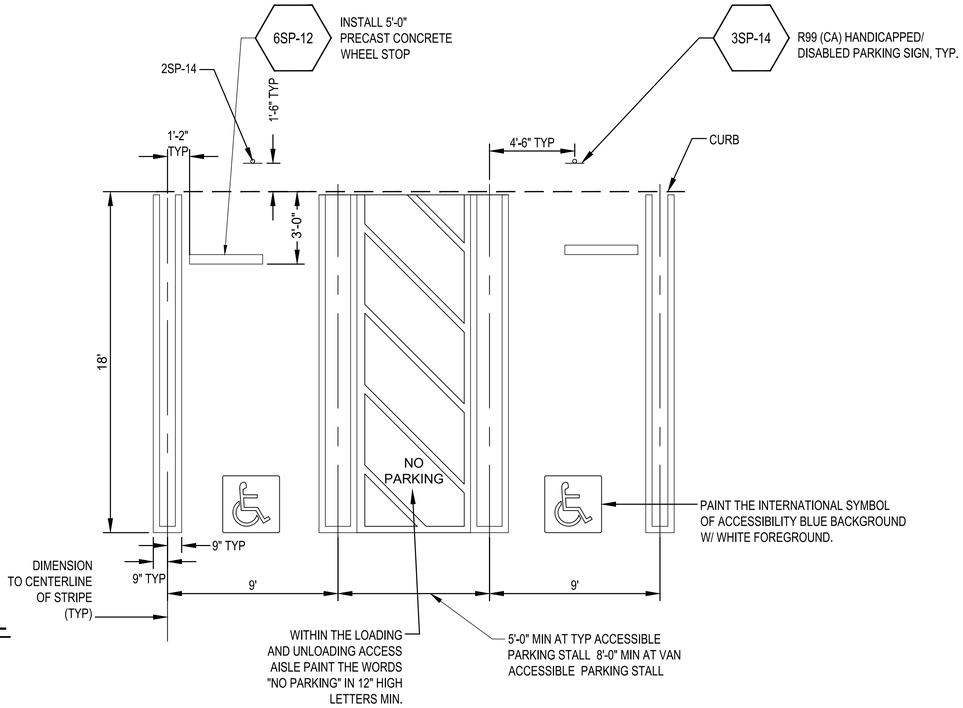

3SP-12 / SP-03 DISABLED PARKING STALL DETAIL
SCALE: NTS

4SP-12 / SP-03 - SP-06 / SP-08 - SP-11 TYPICAL CONTAINER STACKING AREA STRIPING
SCALE: NTS

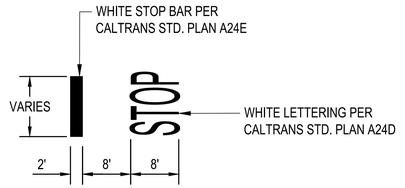

NOTE: REFERENCE POINT IS INSIDE EDGE OF CORNER STRIPES.

5SP-12 / SP-02 - SP-11 STOP BAR DETAIL
SCALE: NTS

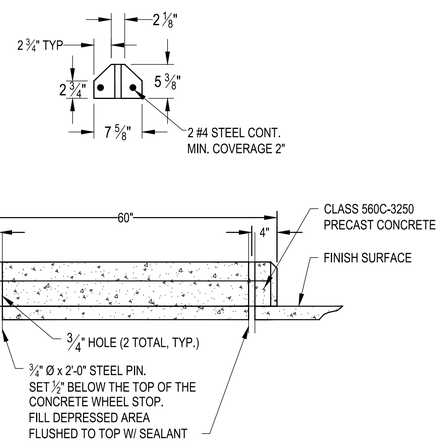

6SP-12 / 2SP-12 / 3SP-12 WHEEL STOP
SCALE: NTS

NO.	DATE	DRAWN	REVISIONS -	CHK'D	APP'D
C	7/18/25	-	40% DESIGN		
D	9/19/25	-	80% DESIGN		

NOT FOR CONSTRUCTION

NO.	DATE	DRAWN	REVISIONS -	CHK'D	APP'D
			80% DESIGN REVIEW SEP 19 , 2025		

Jacobs
2900 MICHELSON DRIVE, SUITE 500
IRVINE, CA 92612
T: (949) 224-7500
F: (949) 224-7501

REGISTERED PROFESSIONAL ENGINEER
MICHAEL S. MCAMIS
No. 60573
CIVIL
STATE OF CALIFORNIA

SCALE: AS SHOWN
DRAWN: E. FLORES
CHECKED: G. NGUYEN
DESIGNED: S. MCAMIS
ENGINEER / ARCHITECT

TERMINAL ISLAND MARITIME SUPPORT FACILITY

STRIPING DETAILS

THE PORT OF LOS ANGELES
ENGINEERING DIVISION
425 S. PALOS VERDES STREET SAN PEDRO CA 90731-3309

DRAWING NUMBER 1-3513
SHEET NUMBER SP-12

POLAPRDT_042023_BWD

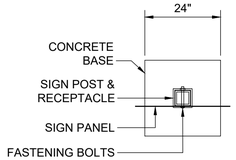

PLAN VIEW

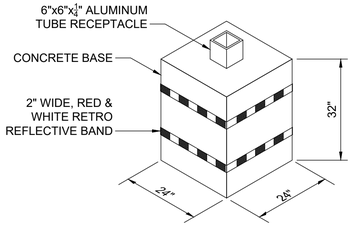

ISOMETRIC VIEW

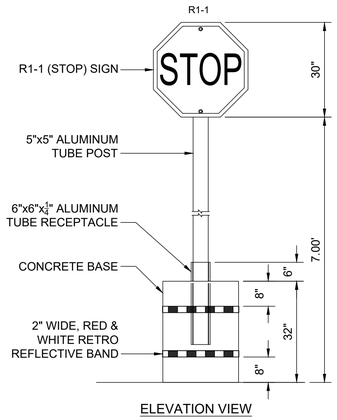

ELEVATION VIEW

NOTES:

1. STOP SIGN SHALL BE 30" REGULATORY RETRO REFLECTIVE SIGN R1-1 PER MUTCD STANDARDS.
2. YIELD SIGN SHALL BE REGULATORY RETRO REFLECTIVE SIGN R1-2 PER MUTCD STANDARDS.
3. CONCRETE BASE SHALL HAVE 28-DAY STRENGTH (f'c) = 2,000 PSI.
4. ALUMINUM RECEPTACLE AND POST TUBING SHALL CONFORM TO ASTM B210 AND B241.

TRUCKS DO NOT ENTER	TYPE 1	ENTRANCE ONLY	TYPE 4
CHASSIS ENTER	TYPE 2	DO NOT ENTER	TYPE 5 (R5-1)
EXIT ONLY	TYPE 3	EMPTY ENTER	TYPE 6

SIGN TYPE (OTHER THAN STOP):

BARREL SIGN SCHEDULE		
0		STOP
1		TRUCKS DO NOT ENTER
2		CHASIS ENTER
3		EXIT ONLY
4		ENTRANCE ONLY
5		DO NOT ENTER
6		EMPTY ENTER
TOTAL	0	

1SP-14 / - TYPICAL BARREL SIGN INSTALLATION DETAILS
SCALE: NTS

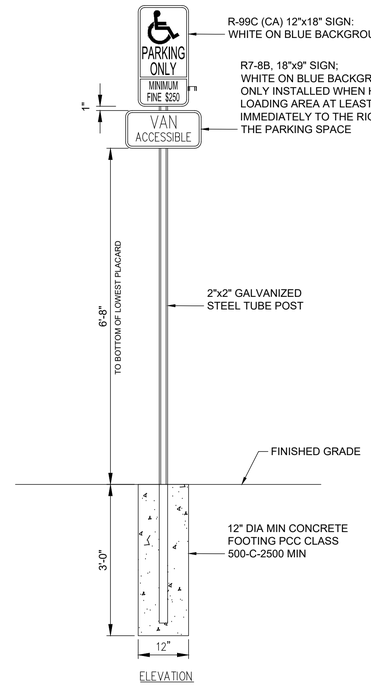

ELEVATION

2SP-14 / - ACCESSIBLE PARKING SIGN DETAIL
SCALE: NTS

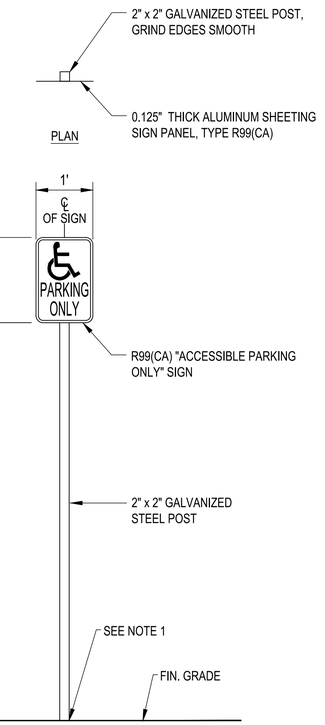

ELEVATION

3SP-14 / 3SP-12 DISABLED PERSON PARKING STALL SIGNAGE DETAILS
SCALE: NTS

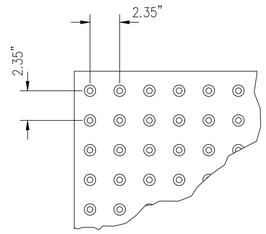

PATTERN

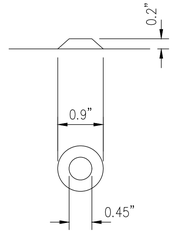

SINGLE "TRUNCATED DOME"

NOTES:

1. DETECTABLE WARNING SURFACE SHALL MEET THE REQUIREMENTS OF CBC 1133B.8.5 AND 1121B.3.1. ITEM 8(a) FOR AREAS WHERE A DESIGNATED WALK CROSSES OR ADJOINS A VEHICULAR WAY AND THE WALKING SURFACES ARE NOT SEPARATED BY CURBS, RAILINGS OR OTHER ELEMENTS BETWEEN THE PEDESTRIAN AREAS AND VEHICULAR AREAS.
2. THE DETECTABLE WARNING SURFACE SHALL BE 36 INCHES WIDE.

4SP-14 / - DETECTABLE WARNING SURFACE DETAIL
SCALE: NTS

NO.	DATE	DRAWN	REVISIONS -	CHK'D	APP'D
C	7/18/25	-	40% DESIGN		
D	9/19/25	-	80% DESIGN		

NOT FOR CONSTRUCTION

80% DESIGN REVIEW SEP 19 , 2025

Jacobs
2800 MICHELSON DRIVE, SUITE 500
IRVINE, CA 92612
T: (949) 224-7500
F: (949) 224-7501

REGISTERED PROFESSIONAL ENGINEER — MICHAEL S. McANIS — No. 60573 — CIVIL — STATE OF CALIFORNIA

SCALE: AS SHOWN
DRAWN: E. FLORES
CHECKED: G. NGUYEN
DESIGNED: S. MCAMIS
ENGINEER / ARCHITECT

TERMINAL ISLAND MARITIME SUPPORT FACILITY

SIGNAGE DETAILS

THE PORT OF LOS ANGELES
ENGINEERING DIVISION
425 S. PALOS VERDES STREET SAN PEDRO CA 90731-3309

DRAWING NUMBER 1-3513
SHEET NUMBER SP-14

POLAPRO1_042023_BWD

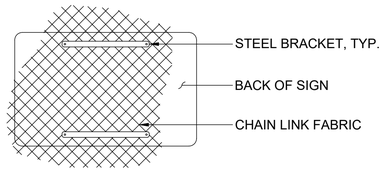

DOUBLE HORIZONTAL MOUNTING BRACKETS



SINGLE MOUNTING BRACKETS

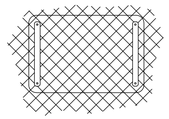

DOUBLE VERTICAL MOUNTING BRACKETS

NOTES:

1. BRACKET SHALL BE 14 GAUGE STEEL MIN., $1\frac{1}{2}$" WIDE.
2. BOLTS, NUTS AND WASHERS SHALL BE GALVANIZED.

1SP-15 / - SIGN MOUNTING DETAILS
SCALE: NTS

NO.	DATE	DRAWN	REVISIONS -	CHK'D	APP'D
C	7/18/25	-	40% DESIGN		
D	9/19/25	-	80% DESIGN		

NOT FOR CONSTRUCTION

NO.	DATE	DRAWN	REVISIONS -	CHK'D	APP'D

80% DESIGN REVIEW
SEP 19 , 2025

Jacobs
2600 MICHELSON DRIVE, SUITE 500
IRVINE, CA 92612
T: (949) 224-7500
F: (949) 224-7501

REGISTERED PROFESSIONAL ENGINEER
MICHAEL S. MCAMIS
No. 60573
CIVIL
STATE OF CALIFORNIA

SCALE: AS SHOWN
DRAWN: E. FLORES
CHECKED: G. NGUYEN
DESIGNED: S. MCAMIS
ENGINEER / ARCHITECT

TERMINAL ISLAND MARITIME SUPPORT FACILITY

SIGNAGE DETAILS

THE PORT OF LOS ANGELES
ENGINEERING DIVISION
425 S. PALOS VERDES STREET SAN PEDRO CA 90731-3309

DRAWING NUMBER 1-3513
SHEET NUMBER SP-15

POLAPRO1_04/2023_BWD

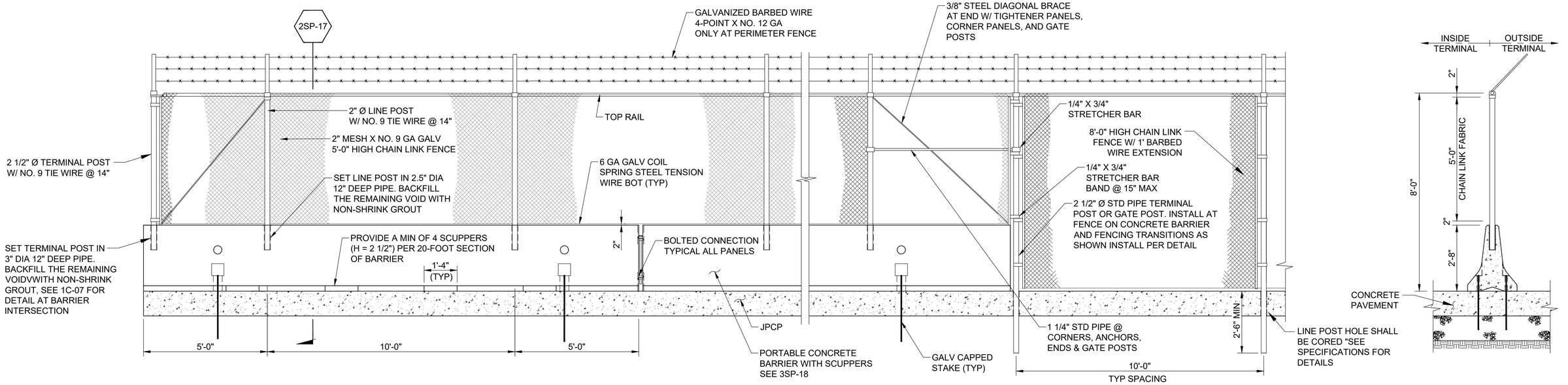

1SP-17 / SP-02 - SP-11 **ELEVATION - PERIMETER FENCE ON CONCRETE BARRIER AND FENCE**
SCALE: 1/2" = 1'-0"

2SP-17 / - **FENCE ON CONC BARRIER**
SCALE: 1/2" = 1'-0"

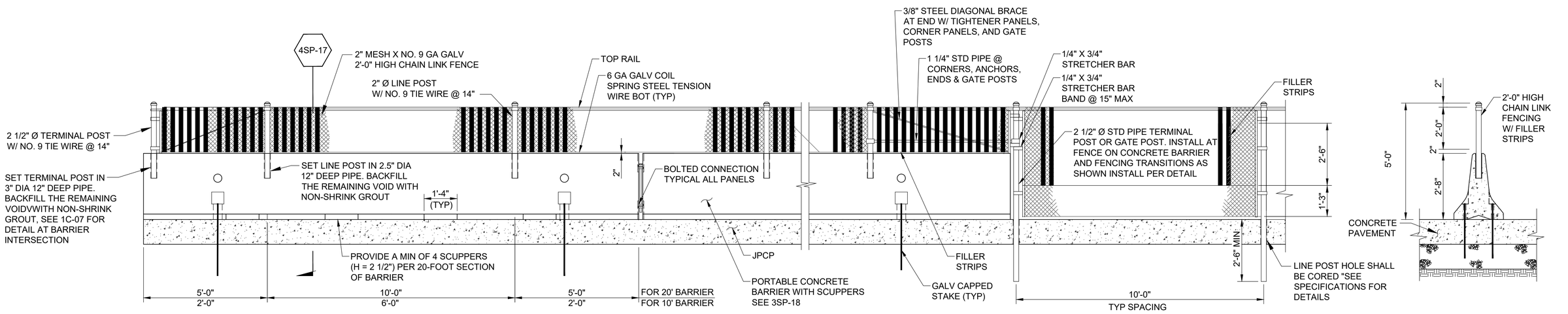

3SP-17 / SP-02 - SP-11 **ELEVATION - INTERIOR FENCE ON CONCRETE BARRIER**
SCALE: 1/2" = 1'-0"

4SP-17 / - **FENCE ON CONC BARRIER**
SCALE: NTS

NO.	DATE	DRAWN	REVISIONS -	CHK'D	APP'D
C	7/18/25	-	40% DESIGN		
D	9/19/25	-	80% DESIGN		

NOT FOR CONSTRUCTION

NO.	DATE	DRAWN	REVISIONS -	CHK'D	APP'D

80% DESIGN REVIEW
SEP 19 , 2025

Jacobs
3901 MACARTHUR BLVD, SUITE 500
NEWPORT BEACH, CA 92660
T: (949) 224-7500
F: (949) 224-7501

REGISTERED PROFESSIONAL ENGINEER
MICHAEL S. MCAMIS
No. 60573
CIVIL
STATE OF CALIFORNIA

SCALE:	AS SHOWN
DRAWN:	E. FLORES
CHECKED:	G. NGUYEN
DESIGNED:	S. MCAMIS
	ENGINEER / ARCHITECT

TERMINAL ISLAND MARITIME SUPPORT FACILITY

FENCING DETAILS

THE PORT OF LOS ANGELES
ENGINEERING DIVISION
425 S. PALOS VERDES STREET SAN PEDRO CA 90731-3309

DRAWING NUMBER: 1-3513
SHEET NUMBER: SP-17

POLAPRD1_04/2023_BWD

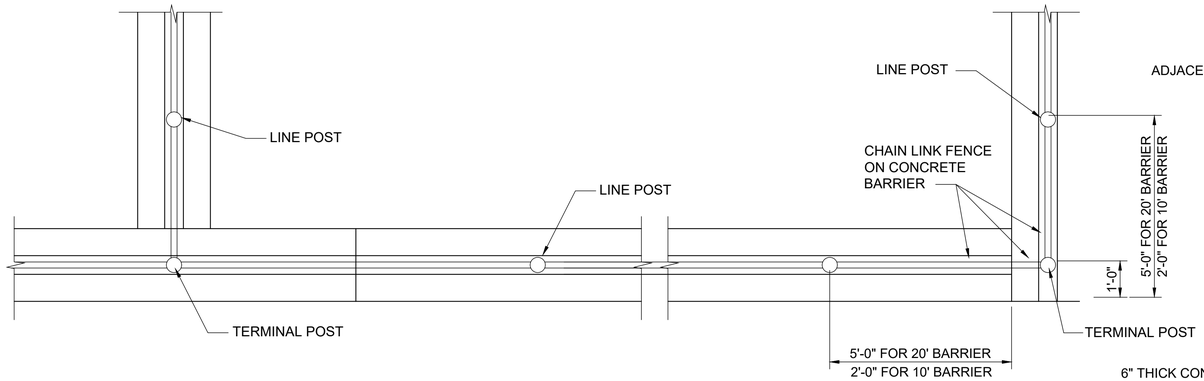

1SP-18 / SP-17 **TERMINAL POST DETAIL**
SCALE: 1/2" = 1'-0"

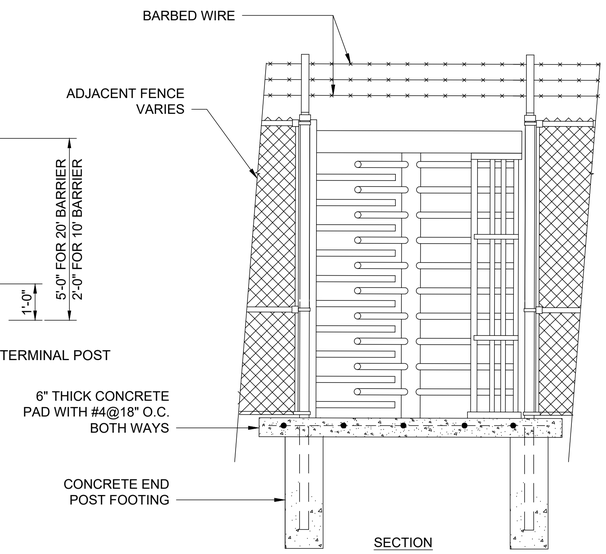

SECTION

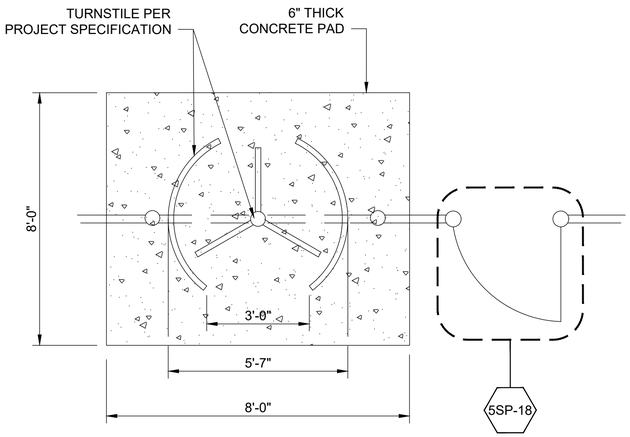

PLAN

4SP-18 / SP-04 **TURNSTILE DETAIL**
SCALE: NTS

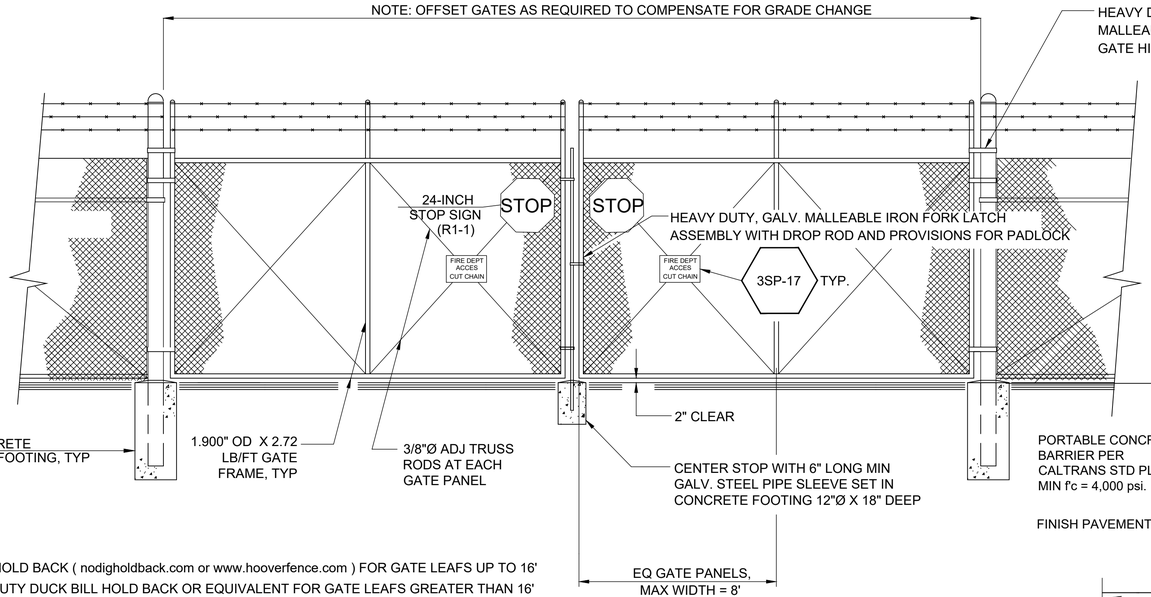

NOTES:

1. INSTALL NO DIG HOLD BACK (nodigholdback.com or www.hooverfence.com) FOR GATE LEAFS UP TO 16'
2. INSTALL HEAVY DUTY DUCK BILL HOLD BACK OR EQUIVALENT FOR GATE LEAFS GREATER THAN 16'
3. INSTALL 24" STOP SIGNS ON EACH LEAF, BOTH SIDES, FOR ALL GATES
4. INSTALL 1'-6" X 1' FIRE DEPT GATE SIGN ON EACH LEAF, BOTH SIDES FOR MANUAL GATES

2SP-18 / SP-02 **DOUBLE LEAF SWING GATES DETAILS - MANUAL**
SCALE: NTS

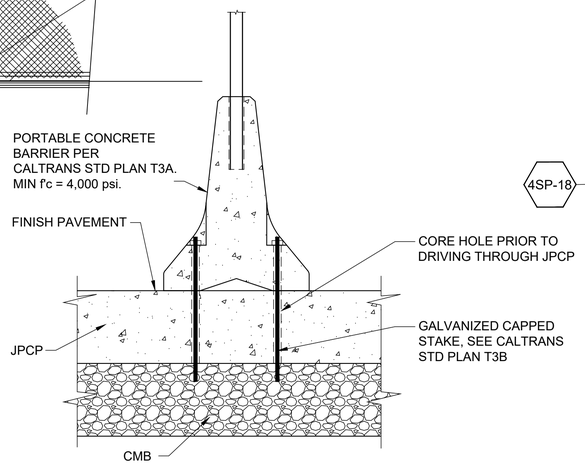

3SP-18 / SP-17 **PORTABLE CONCTRETE BARRIER DETAIL**
SCALE: 1/2" = 1'-0"

DETAILS NOT SHOWN ARE PER CALTRANS STD PLAN T3A AND T3B

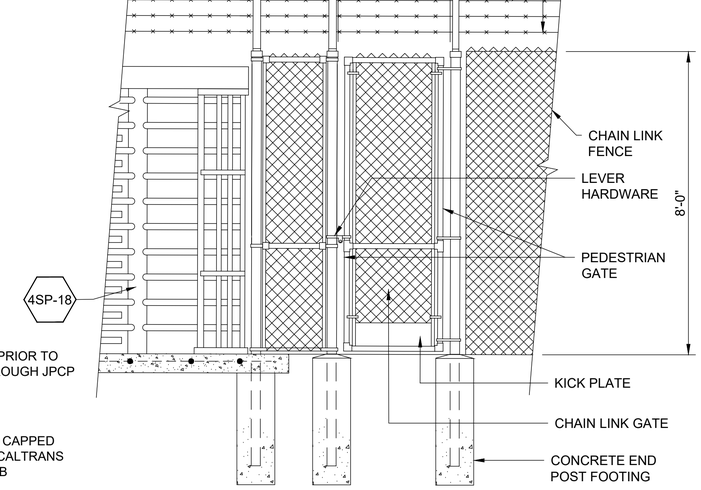

ELEVATION

5SP-18 / - **WALK GATE AT TURNSTILE DETAIL**
SCALE: NTS

NO.	DATE	DRAWN	REVISIONS -	CHK'D	APP'D
C	7/18/25	-	40% DESIGN		
D	9/19/25	-	80% DESIGN		

NOT FOR CONSTRUCTION

NO.	DATE	DRAWN	REVISIONS -	CHK'D	APP'D

80% DESIGN REVIEW
SEP 19 , 2025

Jacobs
3600 MICHELSON DRIVE, SUITE 500
IRVINE, CA 92612
T: (949) 224-7502
F: (949) 224-7501

REGISTERED PROFESSIONAL ENGINEER — MICHAEL S. McANIS — No. 60573 — CIVIL — STATE OF CALIFORNIA

SCALE: AS SHOWN
DRAWN: E. FLORES
CHECKED: G. NGUYEN
DESIGNED: S. MCAMIS
ENGINEER / ARCHITECT

TERMINAL ISLAND MARITIME SUPPORT FACILITY

FENCING DETAILS

THE PORT OF LOS ANGELES
ENGINEERING DIVISION
425 S. PALOS VERDES STREET SAN PEDRO CA 90731-3309

DRAWING NUMBER: 1-3513
SHEET NUMBER: SP-18

POLAPRD1_04/2023_BWD

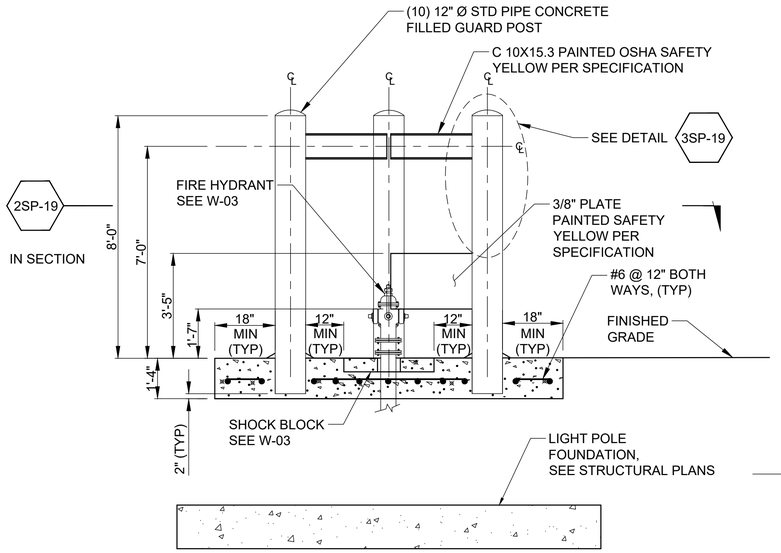

1SP-19 / - GUARD POST FOUNDATION FOR LIGHT POLE SPREAD FOUNDATION

SCALE: NTS

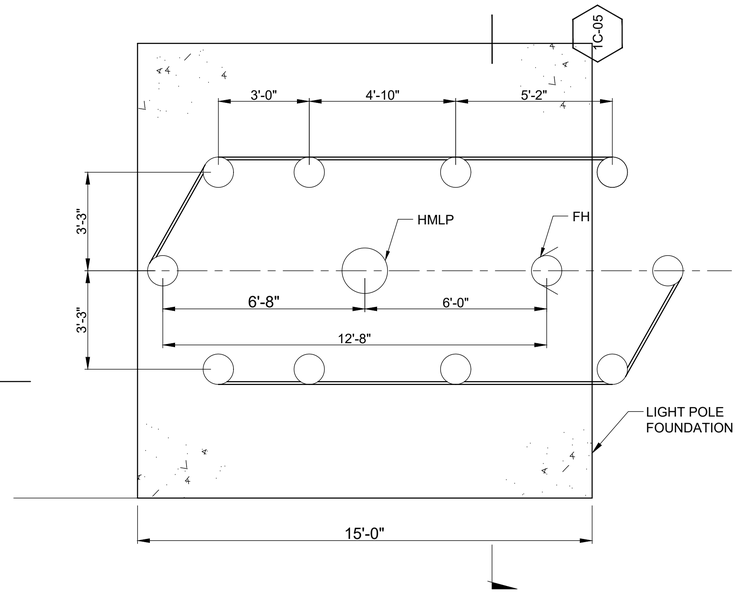

2SP-19 / 1SP-19 PLAN - MIDDLE PLATE

SCALE: NTS

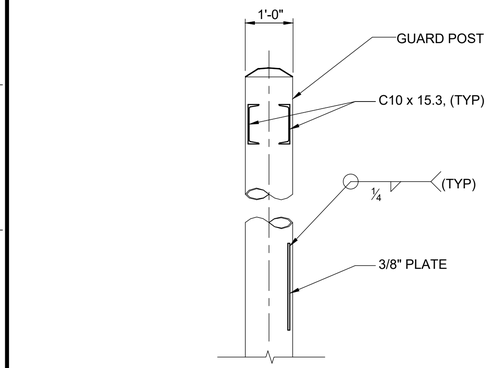

3SP-19 / 1SP-19 GUARD POST - SECTION (TYP)

SCALE: NTS

GUARD POST GENERAL NOTES:

1. PIPE SHALL HAVE A MINIMUM YIELD STRESS OF 35,000 PSI.
2. CONCRETE SLAB 3,000 PSI @ 28 DAYS.
3. CONCRETE IN GUARD POSTS 3,000 PSI @ 28 DAYS.
4. ASTM A615 NEW DEFORMED BILLET-STEEL BARS, GRADE 60.
5. ALL STRUCTURAL STEEL ASTM A-36.
6. ALL WELDING SHALL BE DONE BY CITY OF LOS ANGELES CERTIFIED WELDERS.
7. ALL FABRICATION SHALL BE DONE BY CITY OF LOS ANGELES APPROVED FABRICATOR.
8. ALL WORK TO BE IN ACCORDANCE WITH THE CITY OF LOS ANGELES BUILDING CODE.
9. PAINT OSHA SAFETY YELLOW PER LA HARBOR DEPARTMENT SPECIFICATION.
10. CONTRACTOR SHALL LOCATE ALL UNDERGROUND UTILITIES PRIOR TO INSTALLATION OF GUARD POST.

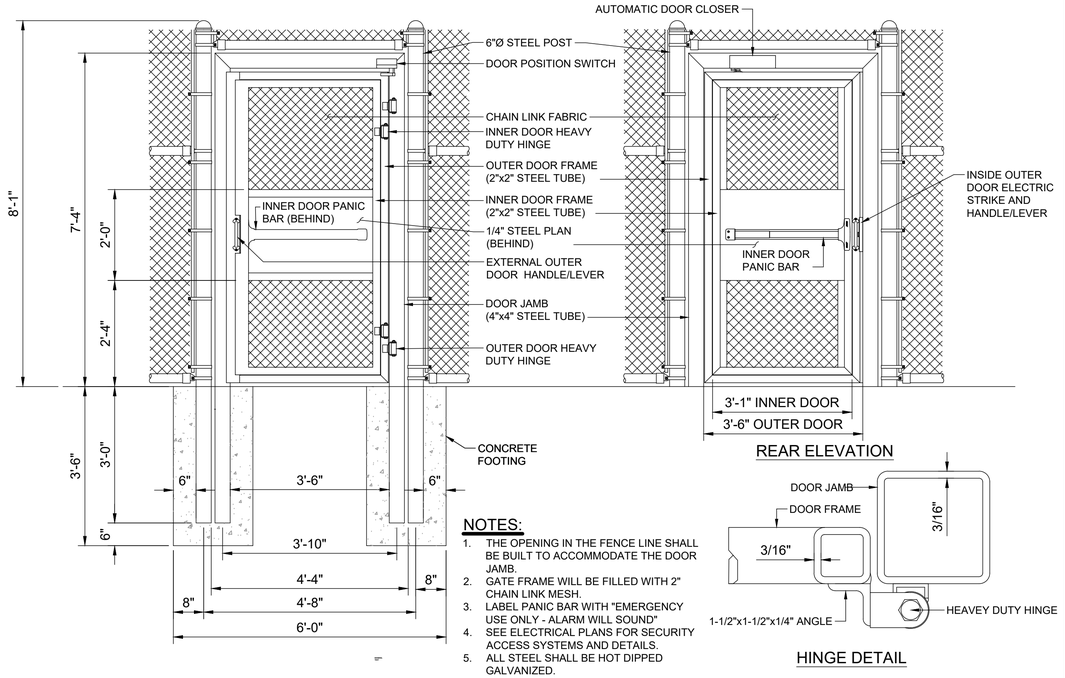

REAR ELEVATION

NOTES:

1. THE OPENING IN THE FENCE LINE SHALL BE BUILT TO ACCOMMODATE THE DOOR JAMB.
2. GATE FRAME WILL BE FILLED WITH 2" CHAIN LINK MESH.
3. LABEL PANIC BAR WITH "EMERGENCY USE ONLY - ALARM WILL SOUND"
4. SEE ELECTRICAL PLANS FOR SECURITY ACCESS SYSTEMS AND DETAILS.
5. ALL STEEL SHALL BE HOT DIPPED GALVANIZED.

HINGE DETAIL

4SP-19 / - SELF CLOSING PEDESTRIAN SWING GATE WITH DOUBLE DOOR

SCALE: NTS

NO.	DATE	DRAWN	REVISIONS -	CHK'D	APP'D
C	7/18/25	-	40% DESIGN		
D	9/19/25	-	80% DESIGN		

NOT FOR CONSTRUCTION

NO.	DATE	DRAWN	REVISIONS -	CHK'D	APP'D
			80% DESIGN REVIEW SEP 19 , 2025		

Jacobs
2600 MICHELSON DRIVE, SUITE 500
IRVINE, CA 92612
T: (949) 224-7500
F: (949) 224-7501

REGISTERED PROFESSIONAL ENGINEER MICHAEL S. McAMIS No. 60573 CIVIL STATE OF CALIFORNIA

SCALE:	AS SHOWN
DRAWN:	E. FLORES
CHECKED:	G. NGUYEN
DESIGNED:	S. MCAMIS
	ENGINEER / ARCHITECT

TERMINAL ISLAND MARITIME SUPPORT FACILITY

FENCING DETAILS

THE PORT OF LOS ANGELES
ENGINEERING DIVISION
425 S. PALOS VERDES STREET SAN PEDRO CA 90731-3309

DRAWING NUMBER	SHEET NUMBER
1-3513	SP-19

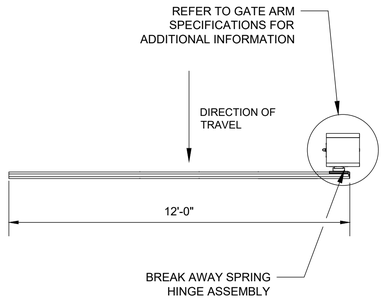

PLAN

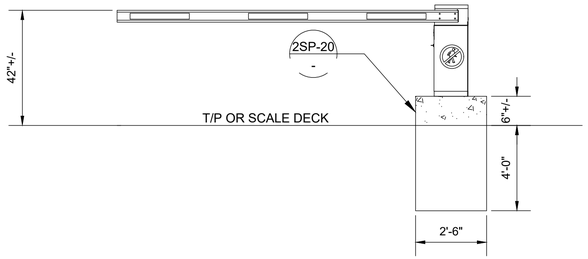

ELEVATION

1SP-20 - GATE ARM DETAIL

SCALE: NTS

NOTE: CONTRACTOR TO PROVIDE:

LOCATION	FOUNDATION	EQUIPMENT
IN-GATE SCALE	✓	BY APM TERMINALS
IN-GATE LANES	N/A	NA
US CUSTOMS RPM LANES	✓	✓
OUT-GATE LANES	✓	BY APM TERMINALS

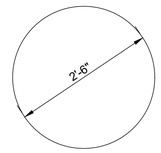

PLAN VIEW

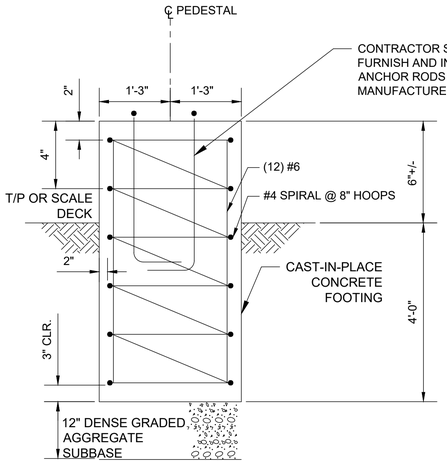

2SP-20 - GATE ARM FOUNDATION DETAIL

SCALE: NTS

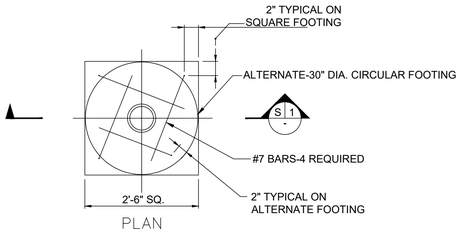

PLAN

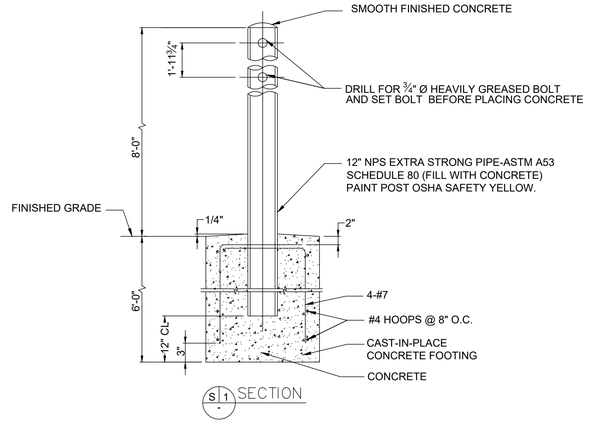

S 1 - SECTION

NOTES:

1. USE BOLLARD DETAIL AROUND UTILITIES AND HIGH MAST LIGHT POLES AS INDICATED ON THE PLANS.
2. WHERE EXCAVATION IS DONE BY AUGERING, PRECAST FOOTINGS WILL NOT BE PERMITTED.
3. DIAMETER OF AUGERED HOLE SHALL NOT EXCEED DIAMETER OF FOOTING BY MORE THAN 3 INCHES.
4. COMPACT BACKFILL AROUND FOOTING.
5. REINFORCING BARS-ASTM A615, GRADE 60.

5SP-20 - EXTRA HEAVY DUTY BOLLARD WITH FOUNDATION

SCALE: NTS

SECTION PLAN

3SP-20 - TYPICAL 6" DIA. BOLLARD DETAIL AT LEEWARD MARINA

SCALE: NTS

4SP-20 - TYPICAL 4" DIA. BOLLARD DETAIL AT LEEWARD MARINA

SCALE: NTS

NO.	DATE	DRAWN	REVISIONS -	CHK'D	APP'D
C	7/18/25	-	40% DESIGN		
D	9/19/25	-	80% DESIGN		

NOT FOR CONSTRUCTION

80% DESIGN REVIEW SEP 19 , 2025

Jacobs
2600 MICHELSON DRIVE, SUITE 900
IRVINE, CA 92612
T: (949) 224-7500
F: (949) 224-7501

REGISTERED PROFESSIONAL ENGINEER — MICHAEL S. McAMIS — No. 60573 — CIVIL — STATE OF CALIFORNIA

SCALE: AS SHOWN
DRAWN: E. FLORES
CHECKED: G. NGUYEN
DESIGNED: S. MCAMIS
ENGINEER / ARCHITECT

TERMINAL ISLAND MARITIME SUPPORT FACILITY

FENCING DETAILS

THE PORT OF LOS ANGELES
ENGINEERING DIVISION
425 S. PALOS VERDES STREET SAN PEDRO CA 90731-3309

DRAWING NUMBER 1-3513

SHEET NUMBER SP-20

POLAPRO1_043020_BWD

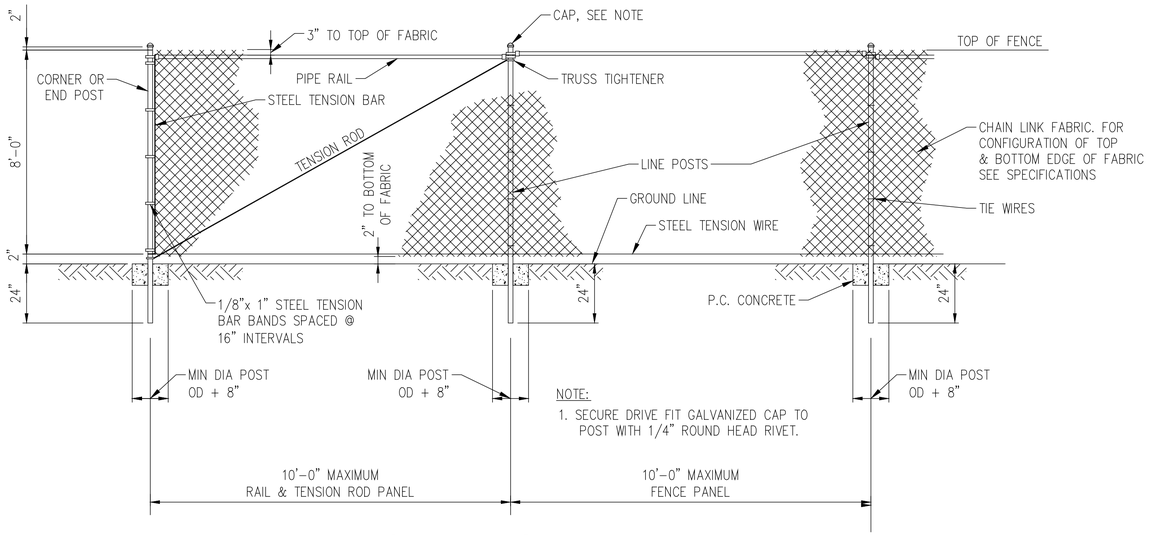

1SP-21 / - TYPICAL TEMPORARY SECURITY FENCE ELEVATION

SCALE: NTS

POST OR GATE	ACTUAL DIAMETER OF POST (INCHES)	NOMINAL ID (INCHES)	WEIGHT OF GALVANIZED STEEL (LB/FT)	DIAMETER OF FOOTING (INCHES)
8' LINE POST	2.375	2.5	3.65	8
END, CORNER, OR TRACK	2.875	3	5.79	12
UNDER 24' DOUBLE LEAF GATE	4.000	4	9.11	18
24' - 36' DOUBLE LEAF GATE	6.625	6 5/8	18.97	18
OVER 36' DOUBLE LEAF GATE	8.625	8 5/8	28.55	24
3' - 6' SINGLE LEAF GATE	2.875	3	5.79	18

NOTES: LINE POST HOLES IN ASPHALT CONCRETE PAVEMENT SHALL BE CORED TO A DIAMETER NO GREATER THAN 1/2 INCH LARGER THAN OUTSIDE DIAMETER OF POST. POSTS SHALL THEN BE DRIVEN INTO GROUND TO A 30-INCH DEPTH AND PLUMBED TRUE W/ WOOD EDGES. BACKFILL REMAINING VOID W/ FINE DRY SAND.

2SP-21 / 3SP-21 SECTION

SCALE: NTS

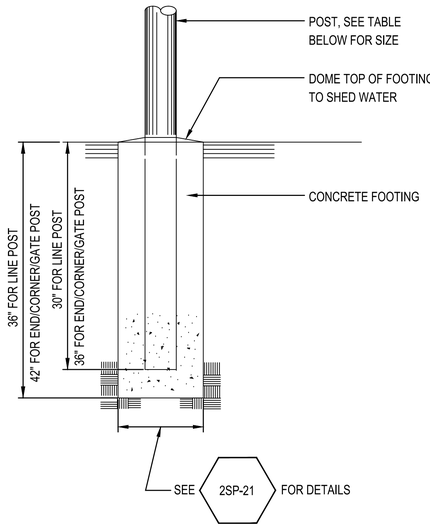

3SP-21 / - SECTION

SCALE: NTS

NO.	DATE	DRAWN	REVISIONS -	CHK'D	APP'D
C	7/18/25	-	40% DESIGN		
D	9/19/25	-	80% DESIGN		

NOT FOR CONSTRUCTION

NO.	DATE	DRAWN	REVISIONS -	CHK'D	APP'D

80% DESIGN REVIEW SEP 19 , 2025

Jacobs
2920 MICHELSON DRIVE, SUITE 600
IRVINE, CA 92612
T: (949) 224-7500
F: (949) 224-7501

REGISTERED PROFESSIONAL ENGINEER MICHAEL S. MCAMIS No. 60573 CIVIL STATE OF CALIFORNIA

SCALE:	AS SHOWN
DRAWN:	E. FLORES
CHECKED:	G. NGUYEN
DESIGNED:	S. MCAMIS
	ENGINEER / ARCHITECT

TERMINAL ISLAND MARITIME SUPPORT FACILITY

FENCING DETAILS

THE PORT OF LOS ANGELES
ENGINEERING DIVISION
425 S. PALOS VERDES STREET SAN PEDRO CA 90731-3309

DRAWING NUMBER	SHEET NUMBER
1-3513	SP-21

POLAPRD1_04/2023_BWD

POINT TABLE

POINT	NORTHING	EASTING
1	1731641.16	6483936.65
2	1731689.96	6483959.78
3	1731701.10	6483969.37
4	1731705.52	6483971.57
5	1731710.13	6483973.65
6	1731816.90	6484024.23
7	1731796.87	6484066.60
8	1731863.16	6484097.95
9	1731577.38	6484242.59
10	1731494.06	6484203.20
11	1731596.76	6484419.25
12	1731524.01	6484457.27
13	1731446.46	6484483.93
14	1731368.11	6484501.00
15	1731684.71	6484291.98
16	1731435.62	6484346.36
17	1731567.99	6484423.37
18	1731593.61	6484252.65
19	1731517.24	6484358.58
20	1731344.31	6484412.70
21	1731295.03	6484416.57
22	1731427.43	6484433.87
23	1731463.36	6484451.28
24	1731358.06	6484431.01
25	1731278.02	6484453.85
26	1731489.85	6483971.51
27	1731566.70	6484007.84
28	1731543.48	6484056.78
29	1731510.95	6484041.38
30	1731497.63	6484046.14
31	1731539.15	6484065.78
32	1731822.86	6484158.34
33	1731501.25	6484206.65
34	1731573.01	6484240.53
35	1731581.99	6484244.82
36	1731306.86	6483802.17
37	1731393.67	6483912.90
38	1731314.38	6483785.82
39	1731267.27	6483853.14
40	1731430.48	6483860.62
41	1731438.17	6483844.35
42	1731375.52	6484140.54
43	1731337.63	6484155.84
44	1731364.08	6483943.90
45	1731364.58	6484000.00

POINT TABLE

POINT	NORTHING	EASTING
46	1731323.58	6484038.57
47	1731242.90	6484070.87
48	1731228.52	6484084.39
49	1731218.33	6484079.36
50	1731193.23	6484067.53
51	1731219.51	6484103.45
52	1731231.43	6484136.74
53	1731270.24	6484155.08
54	1731303.53	6484143.17
55	1731174.47	6484081.73
56	1731141.19	6484093.64
57	1731120.90	6484084.05
58	1731108.98	6484050.76
59	1731108.58	6484109.79
60	1731123.48	6484147.49
61	1730984.97	6484351.25
62	1730988.17	6484369.42
63	1731186.56	6484446.44
64	1730996.52	6484386.74
65	1731139.88	6484447.12
66	1731034.10	6484409.20
67	1731147.64	6484466.40
68	1731067.98	6484438.76
69	1731194.90	6484492.18
70	1731131.38	6484478.00
71	1731079.13	6484457.42
72	1731070.03	6484393.46
73	1731065.30	6484408.30
74	1731066.06	6484430.19
75	1731061.12	6484441.93
76	1730691.63	6484217.35
77	1730687.23	6484227.42
78	1730683.58	6484251.92
79	1730679.09	6484262.33
80	1730652.00	6484188.76
81	1730646.61	6484200.01
82	1730641.42	6484210.85
83	1730635.36	6484223.47
84	1730639.40	6484214.00
85	1730634.74	6484215.74
86	1730651.42	6484261.38
87	1730619.68	6484248.10
88	1731172.94	6483856.86
89	1731132.51	6483866.04
90	1731199.83	6483842.86

POINT TABLE

POINT	NORTHING	EASTING
91	1731198.97	6483753.94
92	1731232.31	6483717.80
93	1731195.17	6483725.43
94	1731160.47	6483735.75
95	1731158.90	6483739.42
96	1731127.55	6483738.19
97	1731107.19	6483780.71
98	1731126.26	6483808.11
99	1731117.96	6483825.68
100	1731112.29	6483830.82
101	1731102.87	6483834.19
102	1731025.67	6483861.82
103	1730977.20	6483879.17
104	1730973.48	6483875.06
105	1731016.59	6483783.88
106	1731049.89	6483771.97
107	1730977.91	6483765.59
108	1730986.62	6483801.94
109	1730934.80	6483803.30
110	1730966.21	6483648.28
111	1730937.11	6483653.94
112	1730922.34	6483684.65
113	1730933.72	6483717.03
114	1730826.09	6483944.67
115	1730806.94	6483985.28
116	1730769.31	6483952.27
117	1730777.56	6483991.18
118	1730938.61	6484045.95
119	1731015.85	6484018.41
120	1731022.24	6484016.13
121	1731025.97	6484020.23
122	1730981.44	6484114.40
123	1730882.45	6484067.59
124	1730888.65	6484054.48
125	1730897.20	6484053.00
126	1730916.31	6484053.93
127	1731052.51	6484153.38
128	1731035.55	6484190.12
129	1730976.57	6484314.86
130	1730917.77	6484287.16
131	1730976.75	6484162.41
132	1730991.65	6484144.56
133	1730978.69	6484125.14
134	1730963.94	6484156.35
135	1730963.36	6484115.87

POINT TABLE

POINT	NORTHING	EASTING
136	1730940.32	6484147.44
137	1730952.16	6484110.67
138	1730951.62	6484152.47
139	1730954.83	6484113.87
140	1730948.91	6484149.26
141	1730930.11	6484091.78
142	1730907.07	6484136.12
143	1730921.51	6484091.49
144	1730917.83	6484109.68
145	1730909.61	6484130.69
146	1730901.62	6484133.55
147	1730849.06	6484244.80
148	1730853.12	6484246.72
149	1730843.11	6484271.52
150	1730840.68	6484276.53
151	1730839.97	6484274.53
152	1730815.79	6484256.73
153	1730644.92	6484176.12
154	1730640.70	6484178.83
155	1730639.61	6484173.61
156	1730720.20	6484015.39
157	1730722.61	6484035.67
158	1730651.74	6484161.65
159	1730884.46	6484100.50
160	1730840.60	6484056.95
161	1730879.00	6484122.89
162	1730822.03	6484096.01
163	1730764.84	6484062.39
164	1730701.57	6484056.04
165	1730689.29	6484082.06
166	1730743.39	6484052.25
167	1730691.13	6484222.76
168	1730630.17	6484234.29
169	1730673.82	6484074.76
170	1730678.49	6484002.04
171	1730608.74	6484105.41
172	1730600.19	6484123.49
173	1730662.52	6484083.00
174	1730632.73	6484090.24
175	1730634.79	6484115.30
176	1730619.85	6484102.63
177	1730613.16	6484130.35
178	1730602.79	6484152.65
179	1730606.37	6484117.29
180	1730546.25	6484138.57

POINT TABLE

POINT	NORTHING	EASTING
181	1730558.47	6484171.05
182	1730557.61	6484172.86
183	1730576.74	6484247.01
184	1730546.29	6484233.99
185	1730538.01	6484206.47
186	1730576.29	6484257.32
187	1730538.15	6484239.20
188	1730538.39	6484166.28
189	1730528.90	6484192.27
190	1730540.88	6484142.58
191	1730466.97	6484131.55
192	1730398.51	6484099.93
193	1730385.38	6484103.55
194	1730370.51	6484127.19
195	1730354.85	6484121.20
196	1730363.10	6484079.76
197	1730390.58	6484092.73
198	1730162.90	6483986.83
199	1730161.17	6483990.44
200	1730168.08	6483976.02
201	1730183.75	6483976.67
202	1730155.98	6484001.26
203	1730173.90	6484016.25
204	1730181.59	6484035.28
205	1730163.31	6484025.56
206	1730139.95	6484034.61
207	1730633.55	6483953.19
208	1730565.99	6484096.13
209	1730402.45	6483744.37
210	1730510.08	6483516.73
211	1730544.38	6483444.45
212	1730467.25	6483407.98
213	1730433.05	6483480.31
214	1730325.43	6483707.95
215	1730325.45	6483807.52
216	1730257.87	6483950.45
217	1730132.89	6483716.47
218	1730065.31	6483859.40
219	1730420.82	6483818.16
220	1730411.78	6483781.29
221	1730383.27	6483785.08
222	1730276.90	6483754.46
223	1730268.56	6483715.51
224	1730306.29	6483748.56
225	1730396.97	6483688.72

POINT TABLE

POINT	NORTHING	EASTING
226	1730368.50	6483675.06
227	1730364.07	6483726.21
228	1730438.45	6483536.15
229	1730475.96	6483527.31
230	1730471.39	6483498.45
231	1730465.53	6483411.56
232	1730421.67	6483447.93
233	1730437.27	6483415.45
234	1730505.89	6483426.25
235	1730502.10	6483397.74
236	1730539.12	6483388.06
237	1730559.50	6483485.69
238	1730548.17	6483509.65
239	1730402.48	6483843.94
240	1730334.90	6483986.87
241	1730563.66	6484160.24
242	1730575.62	6484259.20
243	1730552.42	6484183.68
244	1730537.67	6484241.20
245	1730547.22	6484194.51
246	1730502.14	6484172.87
247	1730173.28	6483965.19
248	1730150.75	6484012.06
249	1730055.87	6483680.06
250	1729988.29	6483822.99
251	1729795.73	6483731.94
252	1729863.30	6483589.01
253	1729786.28	6483552.59
254	1729718.70	6483695.52
255	1729526.14	6483604.48
256	1729593.72	6483461.55
257	1729709.23	6483416.61
258	1729816.66	6483188.89
259	1729851.04	6483116.64
260	1729774.01	6483080.22
261	1729739.68	6483152.48
262	1729632.20	6483380.18
263	1729843.44	6483065.42
264	1729808.72	6483069.91
265	1729812.56	6483098.45
266	1729866.34	6483158.14
267	1729855.01	6483182.10
268	1729778.17	6483170.69
269	1729782.74	6483199.55
270	1729747.31	6483202.18

POINT TABLE

POINT	NORTHING	EASTING
271	1729772.31	6483083.80
272	1729742.96	6483089.66
273	1729670.69	6483398.38
274	1729675.12	6483347.24
275	1729696.10	6483377.06
276	1729689.99	6483457.29
277	1729718.51	6483453.50
278	1729718.88	6483486.28
279	1729612.96	6483420.87
280	1729583.59	6483426.73
281	1729580.56	6483390.22
282	1729516.69	6483425.13
283	1729449.12	6483568.06
284	1729474.13	6483619.27
285	1729372.10	6483531.63
286	1729329.75	6483491.98
287	1729289.41	6483407.53
288	1729324.13	6483334.09
289	1729365.70	6483567.34
290	1729272.75	6483092.82
291	1729304.84	6483225.41
292	1729412.47	6482997.77
293	1729446.64	6482925.44
294	1729311.37	6483293.60
295	1729296.47	6483255.90
296	1729306.60	6483154.51
297	1729268.90	6483169.41
298	1729342.95	6483011.00
299	1729380.03	6483014.69
300	1729373.78	6482979.49
301	1729375.63	6482891.86
302	1729402.92	6482878.05
303	1729439.69	6482889.92
304	1729472.04	6482971.71
305	1729460.71	6482995.67
306	1731861.78	6483914.60
307	1731876.31	6483834.09
308	1731794.00	6483796.64
309	1731779.67	6483803.53
310	1731708.78	6483768.67
311	1731798.75	6483661.99
312	1731714.90	6483631.24
313	1731688.94	6483707.47
314	1731625.78	6483684.22
315	1731829.02	6483699.11

POINT TABLE

POINT	NORTHING	EASTING
316	1731715.43	6483525.70
317	1731571.26	6483563.29
318	1731580.30	6483656.07
319	1731516.38	6483678.94
320	1731581.85	6483663.44
321	1731556.29	6483717.50
322	1731514.20	6483697.59
323	1731612.62	6483475.82
324	1731618.70	6483462.95
325	1731634.46	6483456.50
326	1731683.42	6483488.84
327	1731617.76	6483481.30
328	1731581.84	6483540.91
329	1731612.54	6483613.81
330	1731601.21	6483637.76
331	1731476.59	6483737.52
332	1731575.64	6483482.70
333	1731549.01	6483454.68
334	1731522.37	6483426.65
335	1731576.98	6483451.10
336	1731550.34	6483423.07
337	1731523.71	6483395.04
338	1731516.41	6483381.58
339	1731456.33	6483508.62
340	1731445.88	6483508.05
341	1731416.63	6483514.02
342	1731401.17	6483546.20
343	1731413.24	6483576.73
344	1731370.35	6483556.46
345	1731337.06	6483568.37
346	1731298.38	6483550.08
347	1731307.08	6483586.44
348	1731264.50	6483587.04
349	1731255.66	6483477.98
350	1731271.40	6483445.22
351	1731268.00	6483508.31
352	1731300.49	6483439.56
353	1731221.79	6483168.41
354	1731648.56	6483440.53
355	1731002.80	6483063.84
356	1730777.33	6482951.49
357	1730796.25	6482911.48
358	1730810.27	6482938.42
359	1730738.64	6482933.20
360	1730737.31	6482964.81

POINT TABLE

POINT	NORTHING	EASTING
361	1730705.32	6482970.05
362	1730686.10	6483144.45
363	1730651.90	6483216.78
364	1730700.31	6482915.07
365	1730609.12	6483108.04
366	1730574.73	6483180.29
367	1730680.28	6483087.84
368	1730643.81	6483097.73
369	1730647.61	6483126.25
370	1730700.41	6483182.54
371	1730689.08	6483206.50
372	1730613.21	6483198.49
373	1730617.78	6483227.35
374	1730579.77	6483237.26
375	1730607.36	6483111.60
376	1730579.10	6483115.50
377	1730563.49	6483147.98
378	1730680.72	6482863.99
379	1730611.68	6482794.15
380	1730588.86	6482785.97
381	1730057.34	6482680.34
382	1729992.83	6482816.67
383	1729901.95	6482577.37
384	1730008.56	6482584.23
385	1729917.98	6482775.71
386	1729866.03	6482751.15
387	1729989.00	6482809.29
388	1729988.01	6482776.59
389	1729952.66	6482765.39
390	1730008.33	6482855.33
391	1729997.00	6482879.28
392	1729958.68	6482889.01
393	1729920.00	6482870.72
394	1729915.57	6482921.87
395	1729889.14	6482902.22
396	1729881.68	6482852.58
397	1729842.32	6482833.96
398	1729895.67	6482562.77
399	1729806.61	6482561.77
400	1729690.74	6482765.95
401	1729685.32	6482786.05
402	1729508.35	6482795.02
403	1729461.47	6482752.97
404	1729424.76	6482746.66
405	1729763.40	6482580.05

NO.	DATE	DRAWN	REVISIONS -	CHK'D	APP'D
D	9/19/25	-	80% DESIGN		

NOT FOR CONSTRUCTION

80% DESIGN REVIEW
SEP 19 , 2025

Jacobs
2600 MICHELSON DRIVE, SUITE 500
IRVINE, CA 92612
T: (949) 224-7500
F: (949) 224-7501

REGISTERED PROFESSIONAL ENGINEER
MICHAEL S. McAMIS
No. 60573
CIVIL
STATE OF CALIFORNIA

SCALE: AS SHOWN
DRAWN: A. TRUJILLO
CHECKED: G. NGUYEN
DESIGNED: S. MCAMIS
ENGINEER / ARCHITECT

TERMINAL ISLAND MARITIME SUPPORT FACILITY

STRIPING, SIGNAGE & FENCING COORDINATE POINT TABLE

THE PORT OF LOS ANGELES
ENGINEERING DIVISION
425 S. PALOS VERDES STREET SAN PEDRO CA 90731-3309

DRAWING NUMBER 1-3513
SHEET NUMBER SP-22

THE PORT OF LOS ANGELES

ENGINEERING DIVISION

TERMINAL ISLAND GRADE SEPARATION

SPECIFICATION NO. 2845

NO.	DATE	DRAWN	REVISIONS -	CHK'D	APP'D
			NOT FOR CONSTRUCTION		

Jacobs
2600 MICHELSON DRIVE, SUITE 500
IRVINE, CA 92612
T: (949) 224-7500
F: (949) 224-7501

80% DESIGN

CONSTRUCTION DIVISION		TRANS	R/W	ARCH	SPECS	CHIEF OF DESIGN
INSPECTION	SURVEY	WATERFRONT	CIVIL	ELEC	PR MNGR	ASSISTANT CHIEF HARBOR ENGINEER
CHIEF HARBOR ENGINEER - CONST DIV.			STRUCT	MECH	CAD MNGR	CHIEF HARBOR ENGINEER DATE

TERMINAL ISLAND GRADE SEPARATION

COVER SHEET

THE PORT OF LOS ANGELES
ENGINEERING DIVISION
425 S. PALOS VERDES STREET SAN PEDRO CA 90731-3309

DRAWING NUMBER 1-3497

SHEET NUMBER T-01

DWG: C:\Users\DEPRAA\AppData\Local\Temp\AcPublish_70080\1-3497 T-01_T-04.dwg USER: DEPRAA
DATE: Aug 28, 2025 8:24am
POLAPRD1_042023_BW0

CITY OF LOS ANGELES PERMITTING REQUIREMENTS:

1. PROPERTY OWNER: CITY OF LOS ANGELES HARBOR DEPARTMENT
   PORT OF LOS ANGELES
   425 SOUTH PALOS VERDES
   STREET SAN PEDRO,
   CALIFORNIA 90731
   PHONE: (310) 732-3590
   FAX: (310) 519-0178
2. CIVIL ENGINEER: JACOBS
   2600 MICHELSON DRIVE, SUITE 500
   IRVINE, CALIFORNIA 92612
   PHONE: (949) 224-7500
   FAX: (949) 224-7501
3. GEOTECHNICAL ENGINEER: EARTH MECHANICS, INC.
   461 W. 6TH STREET, SUITE 203
   PHONE: (310) 519-3947
   FAX: (310) 519-1197
4. JOB ADDRESS: TERMINAL ISLAND, 740
   TERMINAL WAY SAN PEDRO,
   CALIFORNIA 90731
5. LEGAL DESCRIPTION (FOR JOB ADDRESS):

   THE LAND IN CITY OF LOS ANGELES, COUNTY OF LOS ANGELES, STATE OF CALIFORNIA WITHIN THE RANCHO LOS PALOS VERDES, INNER BAY OF SAN PEDRO AND PACIFIC OCEAN AS SHOWN ON THE MAP RECORDED IN BOOK 2, PAGES 543 THROUGH 545, OF PATENTS, TOGETHER WITH THOSE PORTIONS WITHIN THE RANCHO SAN PEDRO AS SHOWN ON THE MAP RECORDED IN BOOK 1, PAGES 119 THROUGH 121, OF PATENTS, BOTH IN THE OFFICE OF THE COUNTY RECORDER OF SAID COUNTY.

DRAWING LETTER DESIGNATIONS

T	COVER SHEET AND INDEX
GN	GENERAL PLANS
U	EXISTING COMPOSITE UTILITY PLANS
R	DEMOLITION AND REMOVAL PLANS
PH	CONSTRUCTION PHASING PLANS
C	ROADWAY PLANS
XS	TYPICAL SECTIONS
ED	SUPERELEVATION DIAGRAMS
GP	GRADING PLANS
SD	STORM DRAIN AND STORMWATER BMP PLANS
W	WATER PLANS
SP	SIGNAGE AND STRIPING PLANS
EL	STREET LIGTHING PLANS
TS	TRAFFIC SIGNAL PLANS
E	ELECTRICAL PLANS
LP	LANDSCAPE PLANTING PLANS
LI	LANDSCAPE IRRIGATION PLANS
S	STRUCTURAL PLANS
RW	RETAINING WALL PLANS
GT	SOIL BORINGS
TC	TRAFFIC CONTROL PLANS

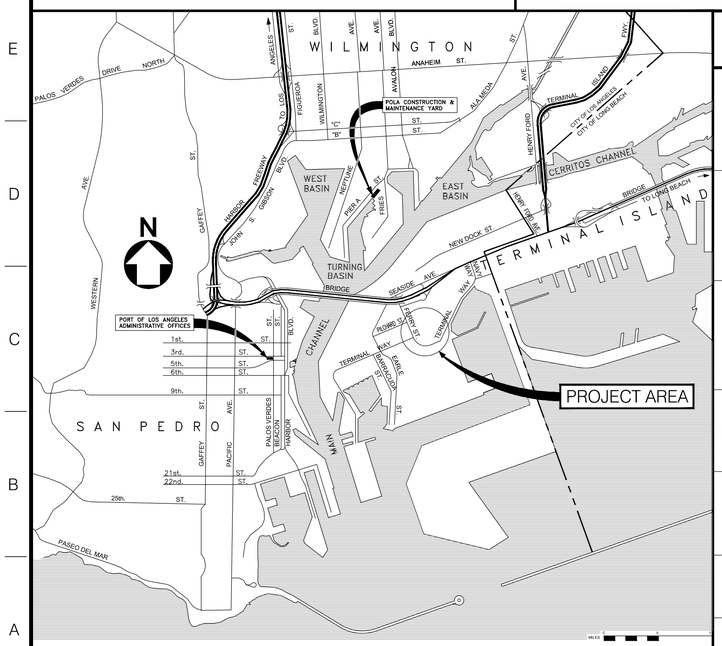

VICINITY MAP

REFERENCING SYSTEM

MAIN PLAN & ELEVATIONS

1A-01 / A-01

- DETAIL NUMBER OF PLAN OR ELEVATION NUMBERED CONSECUTIVELY ON EACH SHEET.
- SHEET NUMBER WHERE PLAN OR ELEVATION IS DRAWN.

MAIN DETAIL, FLAG-SECTIONS & DETAILS

2A-03 / 1A-01

- DETAIL NUMBER OF SECTION OR ELEVATION NUMBERED CONSECUTIVELY ON EACH SHEET.
- SHEET NUMBER WHERE SECTION OR ELEVATION IS DRAWN.
- DETAIL & SHEET NUMBER WHERE SECTION OR DETAIL REFERENCE ORIGINATED.

SUB-DETAIL, FLAG-INTERIOR, ELEVATIONS & DETAILS

A / 2A-04

- SUB-DETAIL NUMBER OF INTERIOR ELEVATION OR DETAIL CONSECUTIVELY LISTED ALPHABETICALLY.
- DETAIL & SHEET NUMBER WHERE SUB-DETAIL REFERENCE ORIGINATED.

REFERENCE FLAG

2A-05

- DETAIL & SHEET NUMBER WHERE DETAIL, SECTION DETAIL OR ELEVATION IS DRAWN.

SECTION FLAG

2A-05

- ARROW INDICATES DIRECTION OF CUT-VIEW.
- DETAIL & SHEET NUMBER WHERE SECTION OR DETAIL IS DRAWN.

A / D / X / B / C

- INTERIOR ELEVATION CALLOUT.
- DRAWN ELEVATION CALLOUT WHERE MULTI ELEVATION OCCURS.

REVISION SYMBOL

A

- REVISION NUMBER (ALPHABETIC DESIGNATION-PRIOR TO BID OPENING. NUMERIC DESIGNATION APPROVED DURING CONSTRUCTION).
- CLOUDED AREA DESIGNATES REVISED AREA.

INDEX OF DRAWINGS

DRAWING NUMBER	TITLE
	COVER SHEET AND INDEX
1-3497 T-01	COVER SHEET
1-3497 T-02	VICINITY MAP & INDEX OF DRAWINGS
1-3497 T-03	INDEX OF DRAWINGS
	GENERAL PLANS
1-3497 GN-01	GENERAL NOTES
1-3497 GN-02	ABBREVIATIONS
1-3497 GN-03	LEGENDS & SYMBOLS
1-3497 GN-04	OVERALL PROJECT SITE PLAN WITH ADJACENT PROJECTS
1-3497 GN-05	HORIZONTAL & VERTICAL CONTROL PLAN
1-3497 GN-06	PROJECT SITE LIMIT COORDINATE CONTROL PLAN
	EXISTING COMPOSITE UTILITY PLANS
1-3497 U-00	EXISTING COMPOSITE UTILITY PLAN - KEY MAP
1-3497 U-01	EXISTING COMPOSITE UTILITY PLAN - 1
1-3497 U-02	EXISTING COMPOSITE UTILITY PLAN - 2
1-3497 U-03	EXISTING COMPOSITE UTILITY PLAN - 3
1-3497 U-04	EXISTING COMPOSITE UTILITY PLAN - 4
1-3497 U-05	EXISTING COMPOSITE UTILITY PLAN - 5
	DEMOLITION AND REMOVAL PLANS
1-3497 R-00	DEMOLITION & REMOVAL PLAN - KEY MAP
1-3497 R-01	DEMOLITION & REMOVAL PLAN - 1
1-3497 R-02	DEMOLITION & REMOVAL PLAN - 2
1-3497 R-03	DEMOLITION & REMOVAL PLAN - 3
1-3497 R-04	DEMOLITION & REMOVAL DETAILS
1-3497 R-05	SOIL HANDLING PLAN - 1
1-3497 R-06	SOIL HANDLING PLAN - 2
	CONSTRUCTION PHASING PLANS
1-3497 PH-00	PHASING PLAN & SCHEDULE
1-3497 PH-01	PHASE 1A, 1B & 1C
1-3497 PH-02	PHASES 1C & 2
1-3497 PH-03	PHASE 3
	ROADWAY PLANS
1-3497 C-00	ROADWAY PLAN - KEY MAP
1-3497 C-01	ROADWAY PLAN & PROFILE - 1
1-3497 C-02	ROADWAY PLAN & PROFILE - 2
1-3497 C-03	ROADWAY PLAN & PROFILE - 3
1-3497 C-04	ROADWAY PLAN & PROFILE - 4
1-3497 C-05	CONSTRUCTION DETAILS
1-3497 XS-01	ROADWAY TYPICAL SECTIONS - 1
1-3497 XS-02	ROADWAY TYPICAL SECTIONS - 2
1-3497 XS-03	ROADWAY TYPICAL SECTIONS - 3

DRAWING NUMBER	TITLE
1-3497 ED-01	SUPERELEVATION DIAGRAM & ES PROFILE - 1
1-3497 ED-02	SUPERELEVATION DIAGRAM & ES PROFILE - 2
1-3497 ED-03	SUPERELEVATION DIAGRAM & ES PROFILE - 3
	GRADING PLANS
1-3497 GP-00	GRADING & PAVING PLAN - KEY MAP
1-3497 GP-01	GRADING & PAVING PLAN - 1
1-3497 GP-02	GRADING & PAVING PLAN - 2
1-3497 GP-03	GRADING & PAVING PLAN - 3
1-3497 GP-04	GRADING & PAVING PLAN - 4
1-3497 GP-05	GRADING & PAVING PLAN - 5
1-3497 GP-06	INTERSECTION GRADING
1-3497 GP-07	JOINTING PLAN - 1
1-3497 GP-08	JOINTING PLAN - 2
	STORM DRAIN AND STORMWATER BMP PLANS
1-3497 SD-00	STORM DRAIN PLAN - KEY MAP
1-3497 SD-00B	STORM DRAIN GENERAL NOTES
1-3497 SD-01	STORM DRAIN PLAN & PROFILE - 1
1-3497 SD-02	STORM DRAIN PLAN & PROFILE - 2
1-3497 SD-03	STORM DRAIN PLAN & PROFILE - 3
1-3497 SD-04	STORM DRAIN PLAN & PROFILE - 4
1-3497 SD-05	STORM DRAIN PLAN & PROFILE - 5
1-3497 SD-06	STORM DRAIN PLAN & PROFILE - 6
1-3497 SD-07	STORM DRAIN DETAILS - 1
1-3497 SD-08	STORMWATER BMP LAYOUT
1-3497 SD-09	STORMWATER BMP DETAILS - 1
1-3497 SD-10	STORMWATER BMP DETAILS - 2
	WATER PLANS
1-3497 W-01	WATER PLAN - KEY MAP
1-3497 W-02	WATER PLAN - 1
1-3497 W-03	WATER PLAN - 2
	SIGNAGE AND STRIPING PLANS
1-3497 SP-00	SIGNAGE & STRIPING PLAN - KEYMAP
1-3497 SP-01	SIGNAGE & STRIPING PLAN - 1
1-3497 SP-02	SIGNAGE & STRIPING PLAN - 2
1-3497 SP-03	SIGNAGE & STRIPING PLAN - 3
1-3497 SP-04	WAYFINDING SIGN REPLACEMENT PLAN
1-3497 SP-05	SIGNAGE & STRIPING DETAILS
1-3497 SP-06	WAYFINDING SIGN DETAILS
1-3497 SP-07	SITE FENCING LAYOUT

TO BE INCLUDED WITH 100% SUBMITTAL

SHEET ____ OF 400

NO.	DATE	DRAWN	REVISIONS -	CHK'D	APP'D
			NOT FOR CONSTRUCTION		

NO.	DATE	DRAWN	REVISIONS -	CHK'D	APP'D
			80% DESIGN		

Jacobs
2600 MICHELSON DRIVE, SUITE 500
IRVINE, CA 92612
T: (949) 224-7500
F: (949) 224-7501

SCALE: NTS
DRAWN: T. PALUSZKIEWICZ
CHECKED: A. BENCINI
DESIGNED: J. HANNA
ENGINEER / ARCHITECT

TERMINAL ISLAND GRADE SEPARATION

VICINITY MAP & INDEX OF DRAWINGS

THE PORT OF LOS ANGELES
ENGINEERING DIVISION
425 S. PALOS VERDES STREET SAN PEDRO CA 90731-3309

DRAWING NUMBER: 1-3497
SHEET NUMBER: T-02

INDEX OF DRAWINGS

DRAWING NUMBER	TITLE
	STREET LIGHTING PLANS
1-3497 EL-00	STREET LIGHTING PLAN - TITLE SHEET
1-3497 EL-01	STREET LIGHTING PLAN
1-3497 EL-02	STREET LIGHTING PLAN
1-3497 EL-03	STREET LIGHTING PLAN
1-3497 EL-04	RAIL LIGHTING PLAN
1-3497 EL-05	STREET LIGHTING DETAILS
1-3497 EL-06	STREET LIGHTING DETAILS
1-3497 EL-07	STREET LIGHTING DETAILS
1-3497 EL-08	STREET LIGHTING DETAILS
	TRAFFIC SIGNAL PLANS
1-3497 TS-01	TEMPORARY SIGNAL PLAN
1-3497 TS-02	RESTORATION SIGNAL PLAN
	ELECTRICAL PLANS
1-3497 E-00	ELECTRICAL KEY PLAN & NOTES
1-3497 E-01	ELECTRICAL SITE PLAN
	LANDSCAPING PLANS
1-3497 LP-00	LANDSCAPE PLANTING - KEY MAP
1-3497 LP-1	PLANTING PLAN - 1
1-3497 LP-2	PLANTING PLAN - 2
1-3497 LP-3	PLANTING PLAN - 3
1-3497 LP-4	PLANTING PLAN - 4
1-3497 LP-5	PLANTING PLAN - 5
1-3497 LP-6	LANDSCAPE PLANTING SCHEDULES & DETAILS
1-3497 LP-7	LANDSCAPE DETAILS - 1
1-3497 LP-8	LANDSCAPE DETAILS - 2
1-3497 LP-9	LANDSCAPE SECTIONS
1-3497 LI-00	LANDSCAPE IRRIGATION - KEY MAP
1-3497 LI-1	IRRIGATION PLAN - 1
1-3497 LI-2	IRRIGATION PLAN - 2
1-3497 LI-3	IRRIGATION PLAN - 3
1-3497 LI-4	IRRIGATION PLAN - 4
1-3497 LI-5	IRRIGATION PLAN - 5
1-3497 LI-6	LANDSCAPE IRRIGATION TABLES & DETAILS
1-3497 LI-7	LANDSCAPE IRRIGATION DETAILS
	STRUCTURAL PLANS
1-3497 S-01	GENERAL PLAN
1-3497 S-02	STRUCTURE TYPICAL SECTION
1-3497 S-03	GENERAL NOTES
1-3497 S-04	DECK CONTOURS
1-3497 S-05	FOUNDATION PLAN

DRAWING NUMBER	TITLE
1-3497 S-06	ABUTMENT 1 LAYOUT
1-3497 S-07	ABUTMENT 3 LAYOUT
1-3497 S-08	ABUTMENT PILE LAYOUT
1-3497 S-09	ABUTMENT DETAILS NO. 1
1-3497 S-10	ABUTMENT DETAILS NO. 2
1-3497 S-11	ABUTMENT DETAILS NO. 3
1-3497 S-12	ABUTMENT DETAILS NO. 4
1-3497 S-13	BENT 2 LAYOUT
1-3497 S-14	BENT DETAILS NO.1
1-3497 S-15	BENT DETAILS NO. 2
1-3497 S-16	BENT DETAILS NO. 3
1-3497 S-17	BENT DETAILS NO. 4
1-3497 S-18	PILE DETAILS
1-3497 S-19	TYPICAL SECTION NO. 1
1-3497 S-20	TYPICAL SECTION NO. 2
1-3497 S-21	GIRDER LAYOUT
1-3497 S-22	GIRDER DETAILS & CAMBER DIAGRAMS
1-3497 S-23	DECK REINFORCEMENT
1-3497 S-24	STRUCTURE APPROACH & DRAINAGE DETAILS NO. 1
1-3497 S-25	STRUCTURE APPROACH & DRAINAGE DETAILS NO. 2
1-3497 S-26	JOINT SEAL DETAILS
1-3497 S-27	CHAIN LINK RAINING (TYPE 7) (MOD)
1-3497 S-28	LOG OF TEST BORINGS LAYOUT
1-3497 S-29	LOG OF TEST BORINGS - BRIDGE (1 OF 5)
1-3497 S-30	LOG OF TEST BORINGS - BRIDGE (2 OF 5)
1-3497 S-31	LOG OF TEST BORINGS - BRIDGE (3 OF 5)
1-3497 S-32	LOG OF TEST BORINGS - BRIDGE (4 OF 5)
1-3497 S-33	LOG OF TEST BORINGS - BRIDGE (5 OF 5)
	RETAINING WALL PLANS
1-3497 RW-01	RETAINING WALL SITE PLAN
1-3497 RW-02	RETAINING WALL NO. 417 PLAN & ELEVATION
1-3497 RW-03	RETAINING WALL NO. 517 PLAN & ELEVATION
1-3497 RW-04	RETAINING WALL NO. 619 PLAN & ELEVATION
1-3497 RW-05	RETAINING WALL NO. 723 PLAN & ELEVATION NO. 1
1-3497 RW-06	RETAINING WALL NO. 723 PLAN & ELEVATION NO. 2
1-3497 RW-07	RETAINING WALL NO. 823 PLAN & ELEVATION NO. 1
1-3497 RW-08	RETAINING WALL NO. 823 PLAN & ELEVATION NO. 2
1-3497 RW-09	RETAINING WALL ELEVATIONS
1-3497 RW-10	LIMITS OF EXCAVATION & BACKFILL NO. 1
1-3497 RW-11	LIMITS OF EXCAVATION & BACKFILL NO. 2
1-3497 RW-12	LIMITS OF EXCAVATION & BACKFILL NO. 3
1-3497 RW-13	LIMITS OF EXCAVATION & BACKFILL NO. 4
1-3497 RW-14	MECHANICALLY STABILIZED EMBANKMENT TYP SECTION
1-3497 RW-15	BARRIER SLAB DETAILS
1-3497 RW-16	MECHANICALLY STABILIZED EMBANKMENT DETAIL NO. 1

DRAWING NUMBER	TITLE
1-3497 RW-17	MECHANICALLY STABILIZED EMBANKMENT DETAIL NO. 2
1-3497 RW-18	MECHANICALLY STABILIZED EMBANKMENT DETAIL NO. 3
1-3497 RW-19	MECHANICALLY STABILIZED EMBANKMENT DETAIL NO.4
1-3497 RW-20	MECHANICALLY STABILIZED EMBANKMENT DETAIL NO. 5
1-3497 RW-21	RETAINING WALL TYPE 5 DETAILS
1-3497 RW-22	DRAINAGE DETAILS NO. 1
1-3497 RW-23	DRAINAGE DETAILS NO. 2
1-3497 RW-24	DRAINAGE DETAILS NO. 3
1-3497 RW-25	DRAINAGE DETAILS NO. 4
1-3497 RW-26	DRAINAGE DETAILS NO. 5
1-3497 RW-27	DRAINAGE INLET DETAILS NO. 1
1-3497 RW-28	DRAINAGE INLET DETAILS NO. 2
1-3497 RW-29	LIGHTING DETAILS
1-3497 RW-30	FENCING DETAILS
1-3497 RW-31	LOG OF TEST BORINGS LAYOUT
1-3497 RW-32	LOG OF TEST BORINGS - RETAINING WALL (1 OF 6)
1-3497 RW-33	LOG OF TEST BORINGS - RETAINING WALL (2 OF 6)
1-3497 RW-34	LOG OF TEST BORINGS - RETAINING WALL (3 OF 6)
1-3497 RW-35	LOG OF TEST BORINGS - RETAINING WALL (4 OF 6)
1-3497 RW-36	LOG OF TEST BORINGS - RETAINING WALL (5 OF 6)
1-3497 RW-37	LOG OF TEST BORINGS - RETAINING WALL (6 OF 6)
	WORKSITE TRAFFIC CONTROL PLANS
1-3497 TC-00	TRAFFIC CONTROL PLAN - KEY MAP
1-3497 TC-01	TRAFFIC CONTROL PLAN - 1
1-3497 TC-02	TRAFFIC CONTROL PLAN - 2
1-3497 TC-03	TRAFFIC CONTROL PLAN - 3

DRAWING NUMBER	TITLE
	REFERENCE PLANS (AS-BUILTS)
1-3513	TERMINAL ISLAND MARITIME SUPPORT FACILITY (TIMSF)
1-947	TERMINAL ISLAND STREET IMPROVEMENT (FERRY STREET AND TERMINAL WAY)
1-2016	BERTH 301 BACKLAND AND REMOTE BACKLAND IMPROVEMENT
1-2033	TERMINAL WAY REALIGNMENT - FERRY STREET TO NAVY WAY
1-2779	BERTH 301 DEMOLITION
1-2997	TERMINAL ISLAND STREET IMPROVEMENTS
1-3067	FIBER OPTIC NETWORK TERMINAL WAY
1-3475	LAXT CARGO SUPPORT FACILITY
	LOS ANGELES HARBOR DEPT STD PLANS
H-101-01	CATCH BASIN GRATE AND FRAME
	CITY OF LOS ANGELES STANDARD PLANS
S-251-1	PIPE LAYING IN TRENCHES
S-300-1	JUNCTION STRUCTURE "A"
S-381-0	MANHOLE "EZ"
S-410-2	TYPES OF CURB AND GUTTER
	GREEN BOOK STANDARD PLANS
401-1	ELECTRICAL SERVICE
403-1	SERVICE CABINET
405-1	PULL BOXES
408-1	WIRING SERVICES
	RED BOOK STANDARD PLANS
	SEE APPENDIX # OF SPECIFICATIONS FOR LIST OF RED BOOK STANDARD PLANS
	CALTRANS STANDARD PLANS
	SEE APPENDIX B OF SPECIFICATIONS FOR LIST OF CALTRANS STANDARD PLANS

*REFERENCE DRAWINGS ARE AVAILABLE FOR REVIEW IN THE DEPARTMENTS WEB-BASED BID MANAGEMENT SYSTEM SEE SPECIFICATIONS FOR DETAILS

SHEET ____ OF 400

NO.	DATE	DRAWN	REVISIONS -	CHK'D	APP'D
			NOT FOR CONSTRUCTION		

NO.	DATE	DRAWN	REVISIONS -	CHK'D	APP'D
			80% DESIGN		

Jacobs
2301 MICHELSON DRIVE, SUITE 500
IRVINE, CA 92612
T: (949) 224-7500
F: (949) 224-7501

SCALE: NTS
DRAWN: G. HUY
CHECKED: A. BENCINI
DESIGNED: J. HANNA
ENGINEER / ARCHITECT

TERMINAL ISLAND GRADE SEPARATION

INDEX OF DRAWINGS

THE PORT OF LOS ANGELES
ENGINEERING DIVISION
425 S. PALOS VERDES STREET SAN PEDRO CA 90731-3309

DRAWING NUMBER 1-3497

SHEET NUMBER T-03

POLAPRO1_04.0220_BWD

GENERAL NOTES:

1. CONTRACTOR IS SPECIFICALLY CAUTIONED THAT THE LOCATION AND ELEVATION OF EXISTING UTILITIES AND STRUCTURES, AS SHOWN ON THESE PLANS, IS BASED ON RECORDS OF VARIOUS UTILITY COMPANIES AND, WHERE POSSIBLE, MEASUREMENTS TAKEN IN THE FIELD. THIS INFORMATION IS NOT TO BE RELIED ON AS BEING EXACT OR COMPLETE. PRIOR TO THE START OF CONSTRUCTION, VERIFY VIA POTHOLE OR OTHER MEANS, THE LOCATION OF ALL UNDERGROUND UTILITIES AND STRUCTURES IN THE FIELD. CONTACT THE APPROPRIATE UTILITY COMPANY, ANY GOVERNING PERMITTING AUTHORITY, AND "CALL 811" AT LEAST 2 WORKING DAYS PRIOR TO ANY EXCAVATION WORK TO REQUEST THE EXACT FIELD LOCATION OF UTILITIES. THE ENGINEER SHALL BE NOTIFIED, IN WRITING, OF ANY UTILITIES INTERFERING WITH THE PROPOSED CONSTRUCTION AND APPROPRIATE REMEDIAL ACTIONS TAKEN BEFORE PROCEEDING WITH THE WORK. RELOCATE ALL EXISTING UTILITIES WHICH CONFLICT WITH THE PROPOSED IMPROVEMENTS SHOWN ON THE PLAN.
2. NO WORK SHALL COMMENCE UNTIL THE APPROPRIATE CITY INSPECTOR FOR STRUCTURAL, GRADING, PLUMBING, AND ELECTRICAL HAS BEEN NOTIFIED. NOTIFY ALL APPROPRIATE LADBS INSPECTORS PRIOR TO COMMENCING WORK.
3. BE RESPONSIBLE FOR ESTABLISHING AND MAINTAINING ALL CONTROL POINTS AND BENCH MARKS NECESSARY FOR THE WORK.
4. CONTRACTOR IS RESPONSIBLE FOR OBTAINING AND PORT WILL PAY FOR ANY CITY AGENCY PERMITS AND/OR CONNECTION FEES REQUIRED TO CARRY OUT THE WORK INCLUDING, BUT NOT LIMITED TO, DEMOLITION. CONTRACTOR IS RESPONSIBLE FOR OTHER AGENCY PERMIT FEES.
5. THE DISPOSAL OF DEMOLISHED MATERIALS IS THE RESPONSIBILITY OF THE CONTRACTOR AND SHALL BE HAULED OFF-SITE IN CONFORMANCE WITH FEDERAL, STATE, AND LOCAL MUNICIPAL REQUIREMENTS.
6. PROTECT AND/OR CAP OFF ALL EXISTING ON-SITE UTILITY SERVICES DESIGNATED ON THESE DRAWINGS. SERVICES SHALL BE CAPPED OFF WHERE THEY ENTER THE PERIMETER OF THE REMOVAL LIMITS. PROVIDE 3D SURVEY OF POINTS WHERE UTILITIES ARE CAPPED.
7. THE LIMIT OF WORK LINE FOR THE AREA TO BE CLEARED AND GRUBBED SHALL BE THE SAME AS THE LIMIT OF WORK LINE NECESSARY FOR GRADING PURPOSES, I.E., THE GRADING LIMITS AROUND THE PERIMETER OF THE PROJECT AREA.
8. THE AREA, OR AREAS, OF ENTRANCE AND EXIT, TO AND FROM THE SITE, SHALL BE CLEARED OF VEGETATION, ROOTS, AND OTHER OBJECTIONABLE MATERIAL AS DETERMINED BY THE ENGINEER.
9. THE AREA, OR AREAS, OF ENTRANCE AND EXIT, TO AND FROM THE SITE, SHALL BE STABILIZED AND MAINTAINED IN A CONDITION THAT WILL PREVENT TRACKING OR FLOWING OF SEDIMENT ONTO PUBLIC RIGHTS-OF-WAY. ACCIDENTAL DEPOSITIONS OF SEDIMENT THAT IS WASHED, TRACKED OR DROPPED IN A PUBLIC RIGHT-OF-WAY SHALL BE SWEPT UP IMMEDIATELY AND MAY NOT BE WASHED DOWN BY RAIN OR OTHER MEANS.
10. EROSION AND SEDIMENTATION CONTROL MEASURES SHALL BE CONSTRUCTED IN CONFORMANCE WITH THE CALIFORNIA ENVIRONMENTAL PROTECTION AGENCY, STATE WATER RESOURCES CONTROL BOARD "EROSION & SEDIMENT CONTROL FIELD MANUAL", REVISED 2002 AND THE CONSTRUCTION GENERAL PERMIT (MOST RECENT ADDITION) 2009, AMENDED 2012.
11. EROSION AND SEDIMENTATION CONTROL MEASURES SHALL BE IN PLACE PRIOR TO THE COMMENCEMENT OF ANY SITE WORK OR EARTHWORK OPERATIONS, SHALL BE MAINTAINED DURING CONSTRUCTION, AND SHALL REMAIN IN PLACE UNTIL SITE WORK IS COMPLETE AND GROUNDCOVER IS ESTABLISHED.
12. ALL STOCKPILES SHALL BE PROTECTED FROM EROSION AND SILTATION FOR THE DURATION OF THE PROJECT. PRIOR TO ANY EXCAVATION, RUNOFF SHALL BE DIVERTED AWAY FROM DISTURBED AND STOCKPILED AREAS. APPROVED PERMANENT EROSION PROTECTION DEVICES SHALL BE USED WHEN EROSION EXPOSURE PERIOD IS EXPECTED TO BE GREATER THAN OR EQUAL TO 6 MONTHS, AND APPROVED TEMPORARY EROSION PROTECTION DEVICES MAY BE USED WHEN THE EROSION EXPOSURE PERIOD IS EXPECTED TO BE LESS THAN 6 MONTHS. NO LOAM OR TOPSOIL SHALL BE REMOVED FROM THE SITE WITHOUT THE WRITTEN PERMISSION OF THE ENGINEER.
13. DISTURBED, OR EXPOSED, AREAS SUBJECT TO EROSION SHALL BE STABILIZED WITH MULCH OR SEEDED FOR TEMPORARY VEGETATIVE COVER. NO AREA SUBJECT TO EROSION SHALL BE LEFT DISTURBED AND UNSTABILIZED FOR PERIODS LONGER THAN IS ABSOLUTELY NECESSARY TO CARRY OUT THAT PORTION OF THE CONSTRUCTION WORK OR 6 MONTHS AFTER SOIL HAS BEEN DISTURBED, WHICHEVER IS LESS.
14. EARTHWORK ACTIVITY ON THE SITE SHALL BE DONE IN SUCH A MANNER THAT RUNOFF IS DIRECTED TO TEMPORARY DRAINAGE SWALES AND SEDIMENTATION BASINS AS DESCRIBED IN THE CONTRACT DOCUMENTS AND AS NEEDED. TEMPORARY DRAINAGE SWALES AND SEDIMENTATION TRAPS SHALL BE RELOCATED AS REQUIRED AS CONSTRUCTION PROGRESSES IN CONFORMANCE WITH THE ABOVE-REFERENCED STANDARDS.
15. APPROVED EROSION CONTROL DEVICES SHALL PROTECT CULVERT INLETS AND OUTFALLS AND SHALL BE CONSTRUCTED AT DRAINAGE INLET STRUCTURES SUBJECT TO STORMWATER RUNOFF.
16. NO SEDIMENT SHALL ENTER THE ON-SITE, OR OFF-SITE, DRAINAGE SYSTEMS AT ANY TIME.
17. FUELS, OILS, SOLVENTS, AND OTHER TOXIC MATERIALS MUST BE STORED IN ACCORDANCE WITH THEIR LISTING AND ARE NOT TO CONTAMINATE THE SOIL NOR THE SURFACE WATERS. APPROVED TOXIC STORAGE CONTAINERS ARE TO BE PROTECTED FROM THE WEATHER. SPILLS MUST BE CLEANED UP IMMEDIATELY AND DISPOSED OF IN A PROPER MANNER. SPILLS MAY NOT BE WASHED INTO THE DRAINAGE SYSTEM.
18. NON-STORM WATER RUNOFF FROM EQUIPMENT AND VEHICLE WASHING AND ANY OTHER ACTIVITY SHALL BE CONTAINED AT THE PROJECT SITE.
19. EXCESS OR WASTE CONCRETE MAY NOT BE WASHED INTO THE PUBLIC WAY OR ANY DRAINAGE SYSTEM. PROVISIONS SHALL BE MADE TO RETAIN CONCRETE WASTES IN CONCRETE WASHOUTS ON-SITE UNTIL THE CONCRETE WASTE CAN BE APPROPRIATELY DISPOSED OF OR RECYCLED.
20. TRASH AND CONSTRUCTION-RELATED SOLID WASTES SHALL BE DEPOSITED INTO A COVERED RECEPTACLE TO PREVENT CONTAMINATION OF RAINWATER AND DISPERSAL BY WIND.
21. THROUGHOUT CONSTRUCTION EROSION CONTROL MEASURES SHALL BE INSPECTED WEEKLY AND PRIOR TO AND IMMEDIATELY AFTER STORM EVENTS TO ENSURE THAT BEST MANAGEMENT PRACTICES ARE PROPERLY CLEANED AND REPAIRED OR REPLACED.
22. KEEP ON SITE AT ALL TIMES, ADDITIONAL EROSION CONTROL DEVICES FOR INSTALLATION AT THE DIRECTION OF THE ENGINEER OR THE AUTHORITY HAVING JURISDICTION TO MITIGATE ANY EMERGENCY CONDITION.
23. SAFE CONSTRUCTION EXCAVATION SLOPES AND SHORING ARE THE RESPONSIBILITY OF THE CONTRACTOR AND SHALL COMPLY WITH ALL OSHA AND OTHER APPLICABLE SAFETY REGULATIONS.
24. SLOPES STEEPER THAN 3:1 SHALL BE STABILIZED AND PROTECTED FROM EROSION WITH AN APPROVED SLOPE STABILIZATION DEVICE.
25. DISTURBED AREAS OUTSIDE THE LIMITS OF WORK SHALL BE RESTORED TO THEIR ORIGINAL CONDITION, UNLESS OTHERWISE NOTED.
26. ITEMS WITHIN THE LIMIT OF WORK NOT SPECIFICALLY CALLED OUT TO BE DEMOLISHED SHALL BE PROTECTED.
27. NOTE THE PRESENCE OF DWP POLES AND OVERHEAD POWER LINES WITHIN THE PROJECT SITE AND SHALL USE EXTREME CAUTION WHEN WORKING IN THEIR VICINITY. MAINTAIN PROPER CLEARANCES FROM DWP FACILITIES WHEN WORKING IN THEIR VICINITY.
28. WHERE CROSSING ANY EXISTING SUBSTRUCTURES WITH NEW SUBSURFACE IMPROVEMENTS, TRENCH CAREFULLY TO LOCATE ACTIVE AND IDLE SUBSTRUCTURES AT THESE CROSSINGS.
29. REPAIR SUBSTRUCTURES DAMAGED DURING CONSTRUCTION AT NO ADDITIONAL COST TO THE DEPARTMENT IF THE DAMAGED SUBSTRUCTURE IS SHOWN ON THESE DRAWINGS OR THE REFERENCE DRAWINGS.
30. PROVIDE ADEQUATE PUMPING AND DRAINAGE FACILITIES TO KEEP EXCAVATED AREA SUFFICIENTLY DRY FROM GROUNDWATER AND/OR RUNOFF SO AS NOT TO ADVERSELY AFFECT CONSTRUCTION PROCEDURES OR CAUSE EXCESSIVE DISTURBANCE OF UNDERLYING NATURAL GROUND, FOOTING SUBGRADE, AND SLAB SUBGRADE.
31. ANY CATCH BASINS THAT RECEIVE RUNOFF FROM THE PROJECT WORK SHALL BE PROTECTED AND CLEANED, AS NECESSARY.
32. A REGISTERED DEPUTY GRADING INSPECTOR IS REQUIRED ON GRADING AND FOUNDATION EARTHWORK WHERE FOUNDATION EXCAVATION BELOW A 1:1 PLANE FROM PROPERTY LINE AND PROJECTS INVOLVE UNUSUAL HAZARDS.
33. A REGISTERED DEPUTY GRADING INSPECTOR IS REQUIRED ON SHORING WORK INCLUDING SLOT-CUTS.
34. NO FILL TO BE PLACED UNTIL THE CITY GRADING INSPECTOR HAS INSPECTED AND APPROVED THE BOTTOM EXCAVATION.
35. FILL SHALL BE COMPACTED PER THE REQUIREMENTS STATED IN THE GEOTECHNICAL REPORT AND THE SPECIFICATIONS. THE ENGINEER SHALL BE NOTIFIED OF ANY DISCREPANCIES BETWEEN THE PLANS, THE GEOTECHNICAL REPORT, AND THE SPECIFICATIONS PRIOR TO BEGINNING WORK.

GENERAL CIVIL NOTES:

1. COORDINATES ARE BASED ON THE NORTH AMERICAN DATUM OF 1983 (NAD 83), CALIFORNIA COORDINATE SYSTEM, ZONE 5, U.S. FEET. 1995 EPOCH.
2. ELEVATIONS ARE BASED ON THE NATIONAL GEODETIC VERTICAL DATUM OF 1929 (NGVD 29), MEAN LOWER LOW WATER (MLLW). USC&GS BM #DY1083 941 0660 TIDAL 8 EL= 13.929
3. SUBMIT COMPACTION REPORTS TO ENGINEER FOR CONDITIONAL APPROVAL.
4. FOLLOW THE LATEST STANDARD SPECIFICATIONS FOR PUBLIC WORKS CONSTRUCTION "GREEN BOOK" UNLESS OTHERWISE NOTED.
5. SAFE CONSTRUCTION EXCAVATION SLOPES AND SHORING ARE THE RESPONSIBILITY OF CONTRACTOR AND SHALL COMPLY WITH CAL OSHA AND OTHER APPLICABLE SAFETY REGULATIONS.
6. COMPLETE WORK CALLED FOR ON DRAWINGS INCLUDING WORK NOTED OUTSIDE PROJECT SITE LIMITS, UNLESS OTHERWISE INDICATED OR IDENTIFIED AS "NOT IN CONTRACT" (NIC). COORDINATE WORK OUTSIDE OF PROJECT SITE LIMITS OR IN BLOCKED OUT AREAS WITH THE OTHER CONTRACTORS OR ENGINEER.
7. PREPARE SUBGRADE AS DEFINED IN SPECIFICATIONS.
8. REGISTERED DEPUTY GRADING INSPECTOR IS REQUIRED ON GRADING AND FOUNDATION EARTHWORK WHERE SITE EXCEEDS 60,000 SQUARE FEET, CUT OR FILL SLOPES EXCEEDS 2:1, SHORING WORK INCLUDING SLOT CUTS.
9. PULL BOXES, MAINTENANCE HOLES, ELECTRICAL RISERS, ELECTRICAL VAULTS, CLEANOUTS, OR ANY OTHER UTILITY ACCESS COVER CALLED OUT AS EXISTING WITHIN PROJECT SITE LIMITS SHALL BE ADJUSTED TO PROPOSED GRADE AND PROTECTED IN PLACE. ITEMS IDENTIFIED AS EXISTING SHALL BE PROTECTED IN PLACE UNLESS NOTED OTHERWISE. STRUCTURES SHALL BE DESIGNED BY A REGISTERED STRUCTURAL OR CIVIL ENGINEER OF CALIFORNIA. SHOP DRAWINGS AND CALCULATIONS BEARING ENGINEER'S SIGNATURE AND STAMP SHALL BE SUBMITTED.
10. PLACE FILL UNDER THE INSPECTION AND APPROVAL OF ENGINEER.NOTIFY ENGINEER AT LEAST 2 WORKING DAYS PRIOR TO STARTING EACH LIFT OF COMPACTED MATERIALS.
11. PROPOSED GRADES ARE TO JOIN EXISTING GRADING AT PROJECT LIMITS AND EXISTING SIDEWALK AND CURB. ELEVATIONS ON DRAWINGS TO BE VERIFIED IN FIELD.
12. RETAIN ERODED SEDIMENTS AND POLLUTANTS ON PROJECT SITE AND SHALL NOT BE TRANSPORTED FROM PROJECT SITE VIA SHEET FLOW, SWALES, AREA DRAINS, NATURAL DRAINAGE, OR WIND.
13. COVER STOCKPILES OF EARTH AND OTHER CONSTRUCTION-RELATED MATERIALS AND PROTECT FROM BEING TRANSPORTED FROM PROJECTSITE BY WIND OR WATER.
14. STORE FUELS, OILS, SOLVENTS, AND OTHER TOXIC MATERIALS IN CONFORMANCE WITH MANUFACTURER'S WRITTEN INSTRUCTIONS AND SHALL NOT CONTAMINATE THE SOIL OR THE SURFACE WATERS. APPROVED TOXIC STORAGE CONTAINERS ARE TO BE PROTECTED FROM THE WEATHER. SPILLS MUST BE CLEANED UP IMMEDIATELY AND DISPOSED OF PROPERLY AND SHALL NOT BE WASHED INTO THE DRAINAGE SYSTEM.
15. CONTAIN NON-STORM WATER RUNOFF FROM EQUIPMENT AND VEHICLE WASHING AND ANY OTHER ACTIVITY ON PROJECT SITE.
16. EXCESS OR WASTE CONCRETE MAY NOT BE WASHED INTO THE PUBLIC WAY OR ANY DRAINAGE SYSTEM. PROVISIONS SHALL BE MADE TO RETAIN CONCRETE WASTE ON-SITE UNTIL IT CAN BE APPROPRIATELY DISPOSED OF OR RECYCLED.
17. DEPOSIT TRASH AND CONSTRUCTION-RELATED SOLID WASTES INTO A COVERED RECEPTACLE TO PREVENT CONTAMINATION OF STORM WATER AND DISPERSAL BY WIND.
18. SEDIMENTS AND OTHER MATERIALS SHALL NOT BE TRACKED FROM THE SITE BY VEHICLE TRAFFIC. THE CONSTRUCTION ENTRANCE ROADWAYS MUST BE STABILIZED SO AS TO INHIBIT SEDIMENTS FROM BEING DEPOSITED INTO THE STREET/PUBLIC WAYS. ACCIDENTAL DEPOSITIONS MUST BE SWEPT UP IMMEDIATELY AND MAY NOT BE WASHED DOWN BY RAIN OR BY ANY OTHER MEANS.
19. PROVIDE RETENTION BASINS OF SUFFICIENT SIZE TO RETAIN STORM WATER RUNOFF ON-SITE AND PROPERLY LOCATE TO COLLECT TRIBUTARY SITE RUNOFF.
20. WHERE RETENTION OF STORM WATER RUNOFF ON-SITE IS NOT FEASIBLE DUE TO SITE CONSTRAINTS, RUNOFF MAY BE CONVEYED TO THE STREET AND THE STORM DRAIN SYSTEM PROVIDED THAT AN APPROVED FILTERING SYSTEM IS INSTALLED AND MAINTAINED ON-SITE DURING THE CONSTRUCTION DURATION.
21. PATHWAY LONGITUDINAL SLOPES NOT TO EXCEED 5%. PATHWAY CROSS-SLOPES AND PLAZA SLOPES NOT TO EXCEED 2% IN ANY DIRECTION. ADA RAMP LONGITUDINAL SLOPE NOT TO EXCEED 8.3%. PAVED AREAS SHALL BE SLOPED TO DRAIN WITH A MINIMUM SLOPE OF 0.5%. PLANTED AREAS SHALL HAVE A MINIMUM SLOPE OF 2% AND A MAXIMUM SLOPE OF 33%. NOTIFY ENGINEER IMMEDIATELY OF ANY DISCREPANCIES BETWEEN THESE RULES AND GIVEN SPOT GRADES.
22. GRADING SLOPES SHALL BE PLANTED AND SPRINKLERED (7012.1)
23. NO FILL SHALL BE PLACED UNTIL THE CITY GRADING INSPECTOR HAS INSPECTED AND APPROVED THE BOTTOM EXCAVATION.
24. MAN-MADE FILL SHALL BE COMPACTED TO A MINIMUM RELATIVE COMPACTION OF 90% MAXIMUM DRY DENSITY WITHIN 40 FEET BELOW FINISHED GRADE AND 93% OF MAXIMUM DRY DESNITY DEEPER THAN 40 FEET BELOW FINSIHED GRADE, UNLESS A LOWER RELATIVE COMPACTION (NOT LESS THAN 90% OF MAXIMUM DRY DENSITY) IS JUSTIFIED BY THE SOILS ENGINEER.
25. TEMPORARY EROSION CONTROL SHALL BE INSTALLED BETWEEN OCTOBER 1 AND APRIL 15. OBTAIN GRADING INSPECTOR'S AND DEPARTMENT OF PUBLIC WORKS APPROVAL OF PROPOSED PROCEDURES (7007.1)
26. OBTAIN REQUIRED PERMITS FROM THE CALIFORNIA DIVISION OF INDUSTRIAL SAFETY FOR CONSTRUCTION OF TRENCHES AND EXCAVATIONS OVER 5 FEET DEEP. SUBMIT PROOF OF PERMIT TO THE INSPECTOR. TRENCHING SHALL COMPLY WITH STANDARD PLAN 477-1.

SHEET ____ OF 400

NO.	DATE	DRAWN	REVISIONS -	CHK'D	APP'D
			NOT FOR CONSTRUCTION		

NO.	DATE	DRAWN	REVISIONS -	CHK'D	APP'D
			80% DESIGN		

Jacobs
3600 MICHELSON DRIVE, SUITE 500
IRVINE, CA 92612
T: (949) 224-7500
F: (949) 224-7501

SCALE: AS SHOWN
DRAWN: T. PALUSZKIEWICZ
CHECKED: A. BENCINI
DESIGNED: J. HANNA
ENGINEER / ARCHITECT

TERMINAL ISLAND GRADE SEPARATION

GENERAL NOTES

THE PORT OF LOS ANGELES
ENGINEERING DIVISION
425 S. PALOS VERDES STREET SAN PEDRO CA 90731-3309

DRAWING NUMBER: 1-3497
SHEET NUMBER: GN-01

POLAPRO1_042023_BWD

ABBREVIATIONS:

A	AB	ANCHOR BOLT
	ABAND	ABANDON
	ABUT	ABUTMENT
	AC	ACRE, ASPHALT CONCRETE
	AHJ	AUTHORITY HAVING JURISDICTION
	AITS	CALTRANS APPROVED IN-LINE TERMINAL SYSTEM
	AL	ALUMINUM
	ALT	ALTERNATE, ALTERNATIVE, ALTERNATING
	AMP	ALTERNATIVE MARITIME POWER
	APPD	APPROVED
	APPROX	APPROXIMATE / APPROXIMATELY
	ARS	ACCELERATION RESPONSE SPECTRUM
	ASSY	ASSEMBLY
	ASTM	AMERICAN SOCIETY FOR TESTING AND MATERIALS
	AVE	AVENUE
	AVG	AVERAGE
B	BB	BEGIN BRIDGE
	BC	BEGINNING OF CURVE, BETWEEN CENTERS
	BCR	BEGINNING OF CURVE RETURN
	BD	BOARD
	BET	BETWEEN
	BEG	BEGINNING
	BF	BACKFLOW
	BKHD	BULKHEAD
	BLDG	BUILDING
	BM	BEAM
	BOC	BACK/BOTTOM OF CURB
	BOT	BOTTOM
	BRG	BEARING
	BVC	BEGINNING OF VERTICAL CURVE
	BVCE	BEGINNING OF VERTICAL CURVE ELEVATION
	BVCS	BEGINNING OF VERTICAL CURVE STATION
C	C	CONDUIT
	CAB	CRUSH AGGREGATE BASE
	CB	CATCH BASIN
	CD	CALENDAR DAYS
	CFS	CONTAINER FREIGHT STATION
	CI	CAST IRON
	CJ	CONSTRUCTION JOINT
	CLR	CLEAR, CLEARANCE
	CMB	CRUSHED MISCELLANEOUS BASE
	CN, CONST	CONSTRUCTION NOTE
	CO	CLEANOUT
	COL	COLUMN
	CONC	CONCRETE
	CONN	CONNECTION
	CONST	CONSTRUCTION
	CONT	CONTINUE, CONTINUOUS
	COTG	CLEANOUT TO GRADE
	CT	CONTAINER TERMINAL
	CU FT	CUBIC FEET
	CW	CONTAINER WHARF
	C&G	CURB AND GUTTER
D	D	DEGREE OF CURVATURE
	DEG	DEGREE
	DEPT	DEPARTMENT
	DEMO	DEMOLISH
	DET	DETAIL
	DIA OR Ø	DIAMETER
	DIAG	DIAGONAL
	DIM	DIMENSION
	DISC	DISCONNECT
	DL	DELOSPERMA LITORALE
	DWP	DEPARTMENT OF WATER AND POWER
	DWPPS	DEPARTMENT OF WATER AND POWER, POWER SYSTEMS
	DWPWS	DEPARTMENT OF WATER AND POWER, WATER SYSTEMS
	DWG	DRAWING
E	E	EAST
	EA	EACH
	EB	END BRIDGE
	EC	END OF CURVE
	ECD	ELECTRICAL CONDUIT DUCT
	ECR	END OF CURVE RETURN
	EG	EXISTING GRADE
	EHT	EXTREMELY HIGH TIDE
	EL OR ELEV	ELEVATION
	ELEC	ELECTRICAL
	ELT	EXTREMELY LOW TIDE
	ELL	ELLOW
	EMH	ELECTRICAL MAINTENANCE HOLE
	ENCSD	ENCASED
	ENGR	ENGINEER
	EOD	EDGE OF DECK
	EP	EDGE OF PAVEMENT
	EQ	EQUAL
	EQUIP	EQUIPMENT
	ES	EDGE OF SHOULDER
	EST	ESTIMATE
	ETW	EDGE OF TRAVELED WAY
	EV	ELECTRICAL VAULT
	EVC	END OF VERTICAL CURVE
	EXIST OR EX	EXISTING
	EXP JT	EXPANSION JOINT
F	FA	FIRE ALARM
	FDN	FOUNDATION
	FG	FINISHED GRADE
	FH	FIRE HYDRANT
	FIG	FIGURE
	FL	FLOW LINE
	FLEX	FLEXIBLE
	FLG	FLANGE
	FLR	FLOOR
	FM	FORCE MAIN
	FP	FULL PENETRATION GROOVE WELD
	FS	FINISHED SURFACE
	FT	FEET, FOOT
	FTG	FOOTING
G	G	GAS
	GA	GAUGE
	GAL	GALLON
	GALV	GALVANIZED
	GB	GRADE BREAK
	GD	GUARD
	GL	GROUND LINE
	GND	GROUND
	GR	GRADE
	GVL	GRAVEL
	GWB	GYPSUM WALLBOARD
H	HDPE	HIGH DESNSITY POLYETHYLENE
	HORIZ	HORIZONTAL
	HMA	HOT MIX ASPHALT
	HMLP	HIGH MAST LIGHT POLE
	HP	HIGH POINT, HINGE POINT
	HS	HIGH STRENGTH
	HT	HEIGHT
	HV	HOSE VALVE
I	ID	INSIDE DIAMETER
	IF	INSIDE FACE
	IN	INCH
	INFIL	INFILTRATION
	INSUL	INSULATE
	INV	INVERT
	IP	INDICATOR PILE
J	JB	JUNCTION BOX
	JPCP	JOINTED PLAIN CONCRTE PAVEMENT
	JS	JUNCTION STRUCTURES
	JT	JOINT
K	KLF	KIPS PER FOOT
	KIP	1,000 POUNDS
	KSI	KIPS PER SQUARE INCH
	KV	KILOVOLTS
	KV-A	KILOVOLT-AMPERE
L	L	LENGTH, STRUCTURAL STEEL ANGLE
	LA	LOS ANGELES
	LAHD	LOS ANGELES HARBOR DEPARTMENT
	LAXT	LOS ANGELES EXPORT TERMINAL
	LB	POUND
	LB/FT	POUNDS PER FOOT
	LF	LINEAR FEET
	LG	LONG
	LOA	LENGTH OVERALL
	LOL	LAYOUT LINE
	LONG	LONGITUDINAL
	LP	LOW POINT
	LS	LANDSIDE
	LT	LEFT
M	MAINT	MAINTENANCE
	MATL	MATERIAL
	MAX	MAXIMUM
	MECH	MECHANICAL
	MFG	MANUFACTURER OF FEATURE (WATER DIST. SYSTEM)
	MFR	MANUFACTURER
	MGS	MIDWEST GUARDRAIL SYSTEM
	MH	MAINTENANCE HOLE
	MHW	MEAN HIGH WATER
	MIN	MINIMUM
	MID	MIDDLE
	MISC	MISCELLANEOUS
	MJ	MECHANICAL JOINT
	ML	MUD LINE
	MLLW	MEAN LOWER LOW WATER
	MLW	MEAN LOW WATER
	MOD	MODIFICATION
	MPH	MILE PER HOUR
	MSE	MECHANICALLY STABLIZED EARTH
	MSL	MEAN SEA LEVEL
	MTD	MOUNTED
	MTL	MATERIAL
N	N	NEW
	N	NORTH
	N/A	NOT APPLICABLE
	NGVD	NATIONAL GEODETIC VERTICAL DATUM
	NIC	NOT IN CONTRACT
	NO.	NUMBER
	NOM	NOMINAL
	NTP	NOTICE TO PROCEED
	NTS	NOT TO SCALE
O	OC	ON CENTER
	OD	OUTSIDE DIAMETER
	OF	OUTSIDE FACE
	OG	ORIGINAL GROUND
	OPNG	OPENING
	OPP	OPPOSITE
	ORIG	ORIGINAL
P	P	POLE, PIPE
	PB	PULL BOX
	P/C	PRECAST
	P/S	PRESTRESS, PRESTRESSING
	PC	POINT OF CURVE
	PH	PHASE/POTHOLE
	PHL	PIERHEAD LINE
	PI	POINT OF INTERSECTION
	PIP	PROTECT IN PLACE
	PL	PLATE (STEEL), PROPERTY LINE
	PMB	PERMEABLE MATERIAL BASE
	POLA	PORT OF LOS ANGELES
	PP	POWER POLE
	PSF	POUNDS PER SQUARE FOOT
	PSI	POUNDS PER SQUARE INCH
	PT	POINT OF TANGENCY
	PVC	POLYVINYL CHLORIDE
	PVMT	PAVEMENT
	PWR	POWER
R	R	RADIUS
	R/C	RATE OF CHANGE
	RCB	REINFORCED CONCRETE BOX
	RCP	REINFORCED CONCRETE PIPE
	RD	ROAD
	RDWY	ROADWAY
	RED.	REDUCING
	REF	REFERENCE
	REINF	REINFORCE, REINFORCED, REINFORCEMENT
	REQD	REQUIRED
	RP	REDUCED PRESSURE
	RR	RAILROAD
	RT	RIGHT
	RW	RETAINING WALL
	R/W	RIGHT OF WAY
S	S	SLOPE, SOUTH
	SCH	SCHEDULE
	SD	STORM DRAIN
	SDMH	STORM DRAIN MAINTENANCE HOLE
	SECT	SECTION
	SEP	SEPARATION
	SHLD	SHOULDER
	SHT(S)	SHEET(S)
	SMH	SEWER MAINTENANCE HOLE
	SIM	SIMILAR
	SPA	SPACING, SPACED
	SPLY	SUPPLY
	SQ	SQUARE
	SQ FT	SQUARE FOOT/FEET
	SQ IN	SQUARE INCH
	SS	SANITARY SEWER, STAINLESS STEEL
	ST	STREET
	ST LT	STREET LIGHT
	STA	STATION
	STD	STANDARD
	STIFF	STIFFEN, STIFFENER
	STL	STEEL
	STRUCT	STRUCTURAL/STRUCTURE
	SUBSTA	SUBSTATION
	SW	SWITCH
	SWBD	SWITCHBOARD
	SWGR	SWITCHGEAR
	SYM	SYMMETRICAL/SYMBOL
T	T	TANGENT DISTANCE
	TCB	TOP OF CATCH BASIN
	TEL	TELEPHONE
	TEMP	TEMPORARY
	TERM	TERMINAL
	TEU	TWENTY FOOT EQUIVALENT UNITS
	THK	THICK(NESS)
	TOC	TOP OF CONCRETE
	TOD	TOP OF DECK
	TOW	TOP OF WALL
	TOR	TOP OF RAIL
	TOT	TOTAL
	TR	TRANSITION RAILING
	TRK	TRACK
	TYP	TYPICAL
U	UG	UNDER GROUND
	UNO	UNLESS NOTED OTHERWISE
	UP	UNION PACIFIC
	USGS	UNITED STATES GEOLOGICAL SURVEY
	USPHL	UNITED STATES PIERHEAD LINE
V	V	VOLTS
	VA	VOLT-AMPERE
	VC	VERTICAL CURVE
	VCP	VITRIFIED CLAY PIPE
	VEG	VEGETATION
	VERT	VERTICAL
W	W	WATER, WEST
	W/	WITH
	W/O	WITHOUT
	WHB	WELDED HEADED REINF. BARS
	WS	WATERSIDE
	WT	WEIGHT
	WUCOLS	WATER USE CLASSIFICATION OF LANDSCAPE SPECIES
	WWF	WELDED WIRE FABRIC
Y	YD	YARD

SYMBOLS

&	AND
@	AT
℄	CENTER LINE
Δ	DEFLECTION ANGLE

SHEET ____ OF 400

NO.	DATE	DRAWN	REVISIONS -	CHK'D	APP'D
			NOT FOR CONSTRUCTION		

NO.	DATE	DRAWN	REVISIONS -	CHK'D	APP'D
			80% DESIGN		

Jacobs
2600 MICHELSON DRIVE, SUITE 500
IRVINE, CA 92612
T: (949) 224-7500
F: (949) 224-7501

SCALE: AS SHOWN
DRAWN: T. PALUSZKIEWICZ
CHECKED: A. BENCINI
DESIGNED: J. HANNA
ENGINEER / ARCHITECT

TERMINAL ISLAND GRADE SEPARATION

ABBREVIATIONS

THE PORT OF LOS ANGELES
ENGINEERING DIVISION
425 S. PALOS VERDES STREET SAN PEDRO CA 90731-3309

DRAWING NUMBER: 1-3497
SHEET NUMBER: GN-02

LEGENDS & SYMBOLS:

LINETYPE LEGEND

- AC GRADE CHANGE (ACGC)
- ASPHALT CURB (ACTC)
- ASPHALT BERM (BRM)
- BACK OF WALK (BW)
- BALLAST GRADE CHANGE (BGC)
- CONCRETE GRADE CHANGE (CGC)
- DIRT GRADE CHANGE (DGC)
- EDGE OF BALLAST (EBL)
- EDGE OF CONCRETE (EOC)
- EDGE OF CMB (ECMB)
- EDGE OF PAVEMENT (EP)
- FLOWLINE (FL)
- CHAIN LINK FENCE (CLF) — X X
- GUARD RAIL (GR)
- K-RAIL (KRL) — KR KR
- MAJOR CONTOUR INTERVAL
- MINOR CONTOUR INTERVAL
- RAIL / CRANE RAIL (RL / CRL)
- RAILROAD WORKING LINE (RWL)
- RETAINING WALL
- STRIPING (STR)
- TOP OF CURB (TC)
- WALL BOTTOM (WB)
- WALL TOP (WT)
- PROJECT SITE LIMITS
- FENCE LINE — X X

SUBSTRUCTURE LINETYPE STANDARDS

- ACTIVE - ELECTRICAL COND — E
- ABANDONED - ELECTRICAL COND — ABAND E
- ACTIVE - FIBER OPTIC CABLE — FOC
- ABANDONED - FIBER OPTIC CABLE — ABAND FOC
- ACTIVE - GAS LINE — GAS
- ABANDONED - GAS LINE — ABAND GAS
- ACTIVE - SEWER LINE — SS
- ABANDONED - SEWER LINE — ABAND SS
- ACTIVE - STORM DRAIN LINE — SD
- ABANDONED - STORM DRAIN LINE — ABAND SD
- ACTIVE - TELEPHONE LINE — TELE
- ABANDONED - TELEPHONE LINE — ABAND TELE
- ACTIVE - WATER LINE — W
- ABANDONED - WATER LINE — ABAND W
- REMOVED - WATER LINE — REM W
- ACTIVE - WATER (DWP) LINE — DWP WS
- ABANDONED - WATER (DWP) LINE — ABAND DWP WS
- REMOVED - WATER (DWP) LINE — REM DWP WS

LEGEND OF CONSTRUCTION NOTES

- COORDINATE
- CONSTRUCT
- EXISTING
- REMOVE
- NOT IN CONTRACT (NIC)
- REMODEL EXISTING
- REMOVE & CONSTRUCT
- RELOCATE
- ABANDON

No.	CONSTRUCTION ITEM	REFERENCE DWG
1	CONCRETE CURB	
2	TYPE C INTEGRAL CURB & GUTTER (a=2.0', b=0.5')	S-410-2
8	CONCRETE PAVEMENT	
14	ASPHALT CONCRETE PAVEMENT (C2-PG 70-10)	
16	CRUSHED MISC BASE (CMB)	
18	METAL BEAM GUARDRAIL	
20	TREE	
21	2-INCH COLDPLANE (MILL) AC PAVEMENT OVERLAY	
24	PALM TREE	
41	FIRE HYDRANT	
46	WAYFINDING SIGN	
47	SIGN	
48	PULL BOX	
60	CONCRETE FLUME (d=0.5'), SEE SHEET C-05	
61	TYPE A CURB	S-410-2
62	FIBER REINFORCED JOINTED PLAIN CONCRETE PAVEMENT	CALTRANS P1
63	CONCRETE CROSS GUTTER (g=6.0')	S-410-2
64	TYPE 842B CONCRETE BARRIER W' CHAIN LINK RAILING (TYPE 7)	CALTRANS B11-81, B11-82, B11-52
65	TRANSVERSE JOINT WITH DOWEL BARS	CALTRANS P1, P10
66	HMA DIKE (TYPE E, CASE F)	CALTRANS A87B
68	4-FT CURB CUT	
69	ALTERNATIVE CRASH CUSHION TL-3 (INCLUDES FOUNDATION)	
70	MINOR CONCRETE VEGETATION CONTROL	CALTRANS A77N5, A77N6
72	TYPE 842B CONCRETE BARRIER	CALTRANS B11-81, B11-82
73	LONGITUDINAL JOINT WITH TIE BARS	CALTRANS P1, P15
74	ISOLATION JOINT	CALTRANS P18
75	IMPORT FILL (R-VALUE = 20 MIN)	
76	MIDWEST GUARDRAIL SYSTEM	CALTRANS A77L1
77	MGS IN-LINE TERMINAL SYSTEM END TREATMENT	CALTRANS A77Q1
78	ALLEY GRATING BASIN (AGB)	
79	REINFORCED CONCRETE PIPE (RCP)	
80	PAVEMENT REMODELING AT CATCH BASIN	
81	CURBSIDE GRATING BASIN (CGB)	
82	JUNCTION STRUCTURE (JS)	LA BOE S-300-1
83	CORRUGATED STEEL PIPE (CSP)	
84	REINFORCED CONCRETE BOX	
85	STORM DRAIN MAINT HOLE	LA BOE S-381 "MH EZ"
86	WARPED GUTTER AT CATCH BASIN, CASE I	LA BOE S-311-0
87	CATCH BASIN	
88	CATCH BASIN NO. 44	
89	CATCH BASIN NO. 47	
90	LOW FLOW INLET STRUCTURE	
91	LOW FLOW OUTLET STRUCTURE	
92	SIDEWALK OUTLET STRUCTURE	
93	SIDEWALK CULVERT WITH STEEL PLATE COVER	
94	SEAL PER DETAIL	
95	REINFORCED CONCRETE PIPE-LINE	
96	SEAL WITH 8" BRICK & MORTAR	
97	CONCRETE COLLAR	
98	MONOLITHIC CONNECTION	

LEGEND OF CONSTRUCTION NOTES

- COORDINATE
- CONSTRUCT
- EXISTING
- REMOVE
- NOT IN CONTRACT (NIC)
- REMODEL EXISTING
- REMOVE & CONSTRUCT
- RELOCATE
- ABANDON

No.	CONSTRUCTION ITEM	REFERENCE DWG
99	SIDE OPENING CATCH BASIN	LA BOE S-351-1
100	TRENCH DRAIN	
101	DRAIN CLEAN OUT (DCO)	
102	FILTER INSERT	
103	POLYVINYL CHLORIDE (PVC) PIPE	
104	CATCH BASIN GRATE AND FRAME	LAHD H-101-01
105	CONCRETE FLARED END SECTION	CALTRANS D94B
106	ROCK SLOPE PROTECTION	CALTRANS CLASS II
107	BIORETENTION BASIN	
108	OBSERVATION WELL	
109	SUBDRAIN CLEANOUT	
135	MANHOLE INNER COVER	
136	SEWER MANHOLE	
137	HOUSE CONNECTION SEWER (HC)	
138	SADDLE	
140	CLEANOUT STRUCTURE	
141	CONRETE BLANKET	
142	PIPE ANCHOR	
143	TUNNEL	
144	JACK PIPE	
145	HDPE	
146	OIL PIPE	
150	BACKFLOW PREVENTER	
151	COPPER PIPE	
152	DUCTILE IRON PIPE	
153	FITTING	
154	WATER VALVE	
155	WATER PUMP	
156	WATER PIPE	
166	MANHOLE	
170	SIGNAL POLE W/ MAST ARM & STREET LIGHT	
171	1-A SIGNAL POLE	
172	UTILITY POLE AND GUY WIRE (NIC)	
173	STREET LIGHT POLE	
174	RAILROAD TRACK (CONSISTS OF RAILS, BALLAST ROCK AND WOOD TIES)	
175	60' HIGH MAST LIGHT POLE	
176	CONVEYOR BELT FOUNDATION (SEE DETAIL R-01)	
177	EMBANKMENT RIPRAP	
178	GUARD BOOTH	
180	PAVEMENT MARKER	
182	STORM DRAIN	
183	SEWER	
184	WATER	
185	HP GAS	
186	GAS	
187	UG ELECTRIC	
188	OG ELECTRIC	
189	UNKNOWN	
205	12" SOLID WHITE LINE	CALTRANS A24G
218	6" WHITE DASHED LINE	CALTRANS A20A, DETAIL 8
219	6" WHITE SOLID LINE	CALTRANS A20B, DETAIL 27B
221	6" YELLOW SOLID LINE	CALTRANS A20B, DETAIL 24
222	8" WHITE SOLID LINE	CALTRANS A20D, DETAIL 38A

LEGEND OF CONSTRUCTION NOTES

- COORDINATE
- CONSTRUCT
- EXISTING
- REMOVE
- NOT IN CONTRACT (NIC)
- REMODEL EXISTING
- REMOVE & CONSTRUCT
- RELOCATE
- ABANDON

No.	CONSTRUCTION ITEM	REFERENCE DWG
224	ARROW PAVEMENT MARKING	CALTRANS A24A
238	FENCE, POST, AND FOUNDATION	
239	GATE (SEE DETAIL)	CALTRANS A85A
240	SINGLE SWING GATE	
243	CHAIN LINK FENCING (6-FT HT, WITH BARBED WIRE POST TOP)	CALTRANS A85
244	CHAIN LINK FENCING ON K-RAIL	
245	CHAIN LINK FENCING ON K-RAIL WITH BARBED WIRE	
246	K-RAIL	
248	CONCRETE TRACK PANELS	
250	CUSTOM REGULATORY SIGN. (REFER TO [DETAIL])	
252	EDGE OF ASPHALT CONCRETE PAVEMENT	
253	JOIN EXISTING PAVEMENT/SIDEWALK	
254	PEDESTRIAN BARRICADE	
255	PEDESTRIAN PUSH BUTTON	
266	TRAFFIC SIGNAL	
267	TRAFFIC SIGNAL CONTROLLER CABINET	
268	TRAFFIC SIGNAL POLE	
269	12" WHITE CHEVRON, 8' SPACING (TYP.), 45 DEGREE ANGLE	CALTRANS A20C
270	12" WHITE BARRIER LINE	CALTRANS A20C, DETAIL 36B
271	DOUBLE YELLOW CENTERLINE	CALTRANS A20A, DETAIL 21
272	LANE LINE EXTENSIONS	CALTRANS A20C, DETAIL 37C
273	12" CROSSWALK	CALTRANS A24F
280	CHAIN LINK FENCE ON GROUND, 6' HEIGHT WITH BARBED WIRE ON TOP	CALTRANS A85
288	PLANT TREE: PC	
289	PLANT TREE: PR	
290	PLANT TREE: CC	
291	PLANT TREE: AM	
292	PLANT TREE: CL	
293	PLANT SHRUBS & GROUNDCOVER: SL	
294	PLANT SHRUBS & GROUNDCOVER: GC	
295	PLANT SHRUBS & GROUNDCOVER: AC	
296	PLANT SHRUBS & GROUNDCOVER: BB	
297	EXISTING TREE ALREADY REMOVED	
298	EXISTING TREE	
299	EXISTING ROCK MULCH TO REMAIN	
300	SOFFIT LIGHTS	
301	IRRIGATION CONTROLLER	
302	SOLAR POWERED STREET LIGHTS	
303	ELECTRICAL PULL BOX	
304	EMPTY CONDUITS	

SHEET ____ OF 400

NO.	DATE	DRAWN	REVISIONS -	CHK'D	APP'D
			NOT FOR CONSTRUCTION		

NO.	DATE	DRAWN	REVISIONS -	CHK'D	APP'D
			80% DESIGN		

Jacobs
2600 MICHELSON DRIVE, SUITE 500
IRVINE, CA 92612
T: (949) 224-7500
F: (949) 224-7501

SCALE: AS SHOWN
DRAWN: T. PALUSZKIEWICZ
CHECKED: A. BENCINI
DESIGNED: J. HANNA
ENGINEER / ARCHITECT

TERMINAL ISLAND GRADE SEPARATION

LEGENDS & SYMBOLS

THE PORT OF LOS ANGELES
ENGINEERING DIVISION
425 S. PALOS VERDES STREET SAN PEDRO CA 90731-3309

DRAWING NUMBER: 1-3497
SHEET NUMBER: GN-03

POLAPRDY_04/2023_BWD

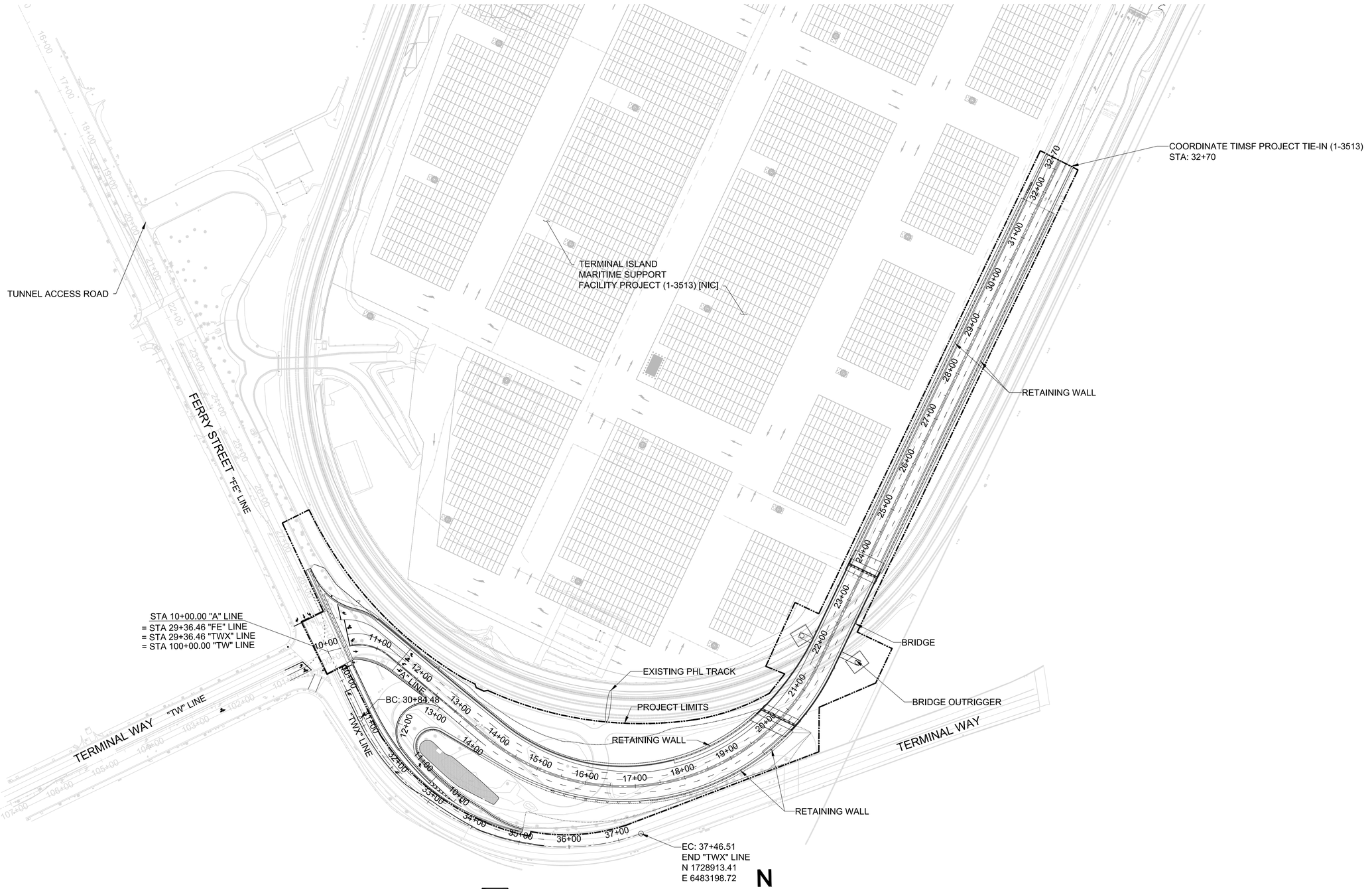

1GN-04 / GN-04 **SITE PLAN - CONCEPT**
SCALE: 1" = 100'

100' 0'-0" 100' 200'
SCALE: 1" = 100'

SHEET ____ OF 400

NO.	DATE	DRAWN	REVISIONS -	CHK'D	APP'D
			NOT FOR CONSTRUCTION		

NO.	DATE	DRAWN	REVISIONS -	CHK'D	APP'D
			80% DESIGN		

Jacobs
2600 MICHELSON DRIVE, SUITE 500
IRVINE, CA 92612
T: (949) 224-7500
F: (949) 224-7501

SCALE:	1"=100'
DRAWN:	G, HUY
CHECKED:	A. BENCINI
DESIGNED:	J. HANNA
	ENGINEER / ARCHITECT

TERMINAL ISLAND GRADE SEPARATION

OVERALL PROJECT SITE PLAN WITH ADJACENT PROJECTS

THE PORT OF LOS ANGELES
ENGINEERING DIVISION
425 S. PALOS VERDES STREET SAN PEDRO CA 90731-3309

DRAWING NUMBER	SHEET NUMBER
1-3497	GN-04

POLAPRDY_04/2023_BWD

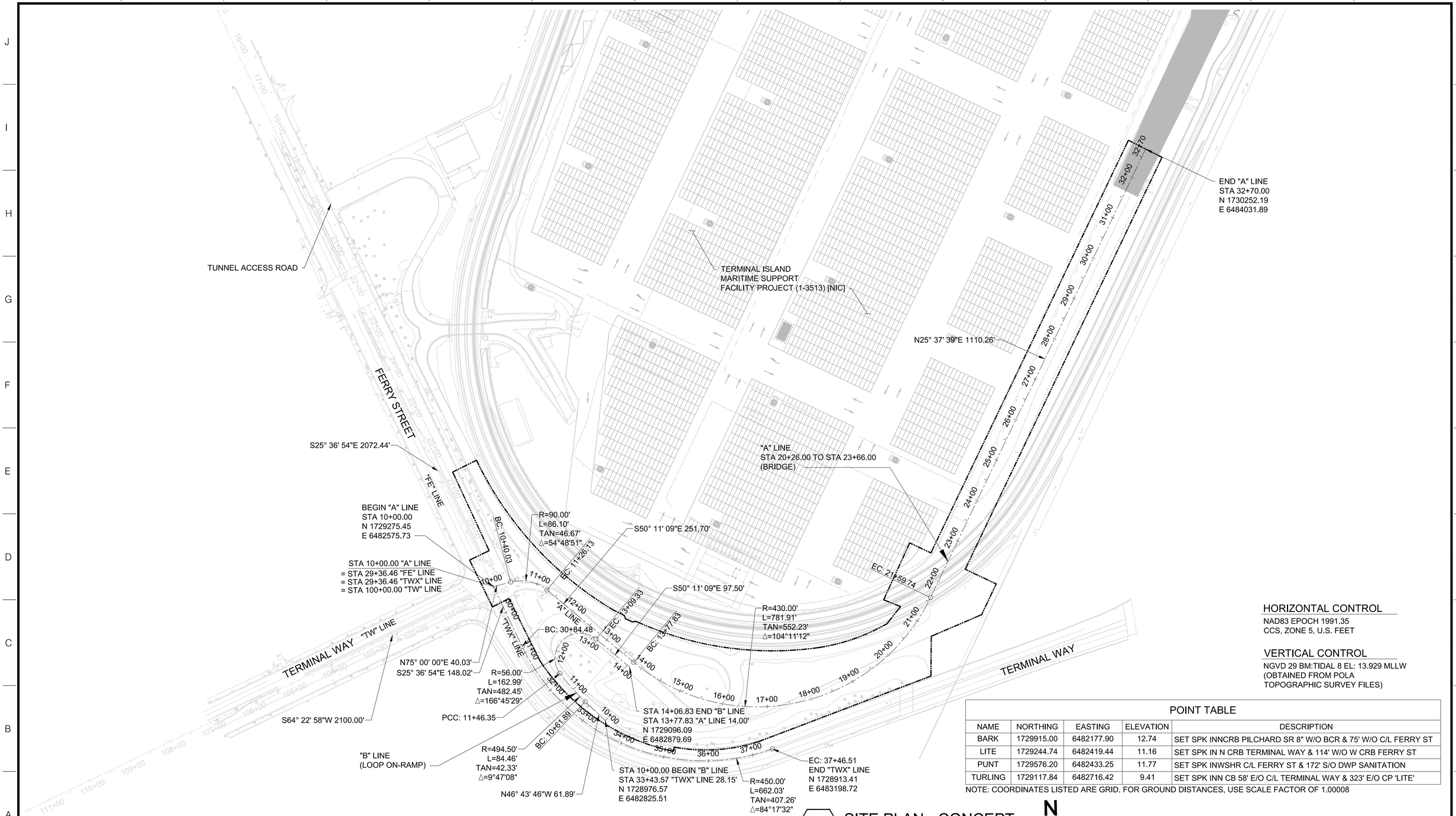

HORIZONTAL CONTROL

NAD83 EPOCH 1991.35
CCS, ZONE 5, U.S. FEET

VERTICAL CONTROL

NGVD 29 BM:TIDAL 8 EL: 13.929 MLLW
(OBTAINED FROM POLA
TOPOGRAPHIC SURVEY FILES)

POINT TABLE

NAME	NORTHING	EASTING	ELEVATION	DESCRIPTION
BARK	1729915.00	6482177.90	12.74	SET SPK INNCRB PILCHARD SR 8" W/O BCR & 75' W/O C/L FERRY ST
LITE	1729244.74	6482419.44	11.16	SET SPK IN N CRB TERMINAL WAY & 114' W/O W CRB FERRY ST
PUNT	1729576.20	6482433.25	11.77	SET SPK INWSHR C/L FERRY ST & 172' S/O DWP SANITATION
TURLING	1729117.84	6482716.42	9.41	SET SPK INN CB 58' E/O C/L TERMINAL WAY & 323' E/O CP 'LITE'

NOTE: COORDINATES LISTED ARE GRID. FOR GROUND DISTANCES, USE SCALE FACTOR OF 1.00008

GN-05 / GN-05 SITE PLAN - CONCEPT
SCALE: 1" = 100'

N

100' 0'-0" 100' 200'
SCALE: 1" = 100'

SHEET ____ OF 400

NO.	DATE	DRAWN	REVISIONS -	CHK'D	APP'D
			NOT FOR CONSTRUCTION		

NO.	DATE	DRAWN	REVISIONS -	CHK'D	APP'D
			80% DESIGN		

Jacobs
2600 MICHELSON DRIVE, SUITE 500
IRVINE, CA 92612
T: (949) 224-7500
F: (949) 224-7501

SCALE:	1"=100'
DRAWN:	T. PALUSZKIEWICZ
CHECKED:	A. BENCINI
DESIGNED:	J. HANNA
	ENGINEER / ARCHITECT

TERMINAL ISLAND GRADE SEPARATION

HORIZONTAL & VERTICAL CONTROL PLAN

THE PORT OF LOS ANGELES
ENGINEERING DIVISION
425 S. PALOS VERDES STREET SAN PEDRO CA 90731-3309

DRAWING NUMBER: 1-3497
SHEET NUMBER: GN-05

POLAPRDY_04/2023_BWD

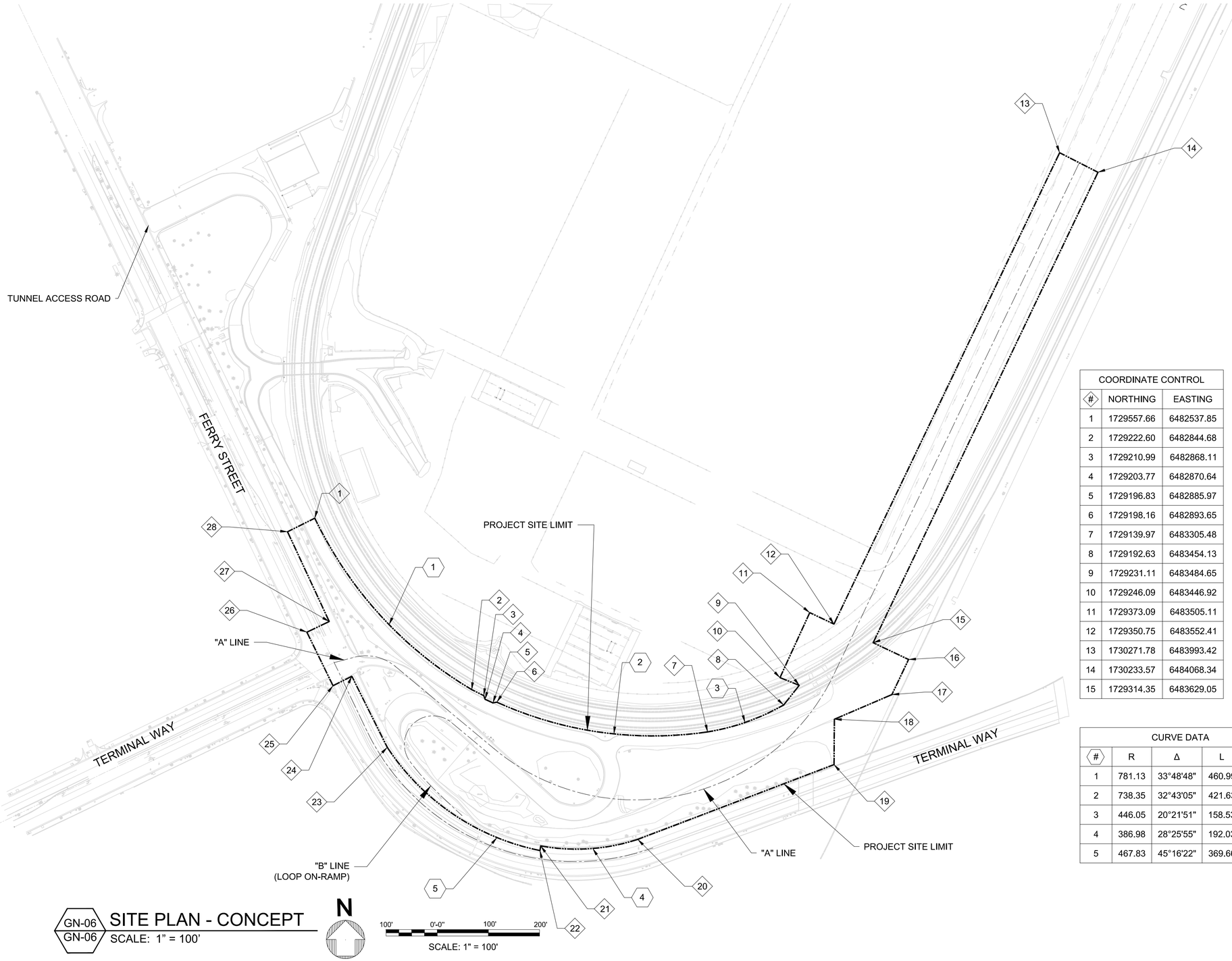

COORDINATE CONTROL		
#	NORTHING	EASTING
1	1729557.66	6482537.85
2	1729222.60	6482844.68
3	1729210.99	6482868.11
4	1729203.77	6482870.64
5	1729196.83	6482885.97
6	1729198.16	6482893.65
7	1729139.97	6483305.48
8	1729192.63	6483454.13
9	1729231.11	6483484.65
10	1729246.09	6483446.92
11	1729373.09	6483505.11
12	1729350.75	6483552.41
13	1730271.78	6483993.42
14	1730233.57	6484068.34
15	1729314.35	6483629.05

COORDINATE CONTROL		
#	NORTHING	EASTING
16	1729281.55	6483698.21
17	1729212.94	6483665.66
18	1729164.80	6483553.28
19	1729076.16	6483552.54
20	1728930.03	6483169.00
21	1728917.22	6482979.36
22	1728908.19	6482977.90
23	1729109.89	6482679.56
24	1729248.79	6482610.27
25	1729230.22	6482573.52
26	1729334.92	6482522.46
27	1729355.76	6482566.11
28	1729531.15	6482484.68

CURVE DATA				
#	R	Δ	L	T
1	781.13	33°48'48"	460.99	237.42
2	738.35	32°43'05"	421.63	216.73
3	446.05	20°21'51"	158.53	80.11
4	386.98	28°25'55"	192.03	98.04
5	467.83	45°16'22"	369.66	195.09

GN-06
GN-06
SITE PLAN - CONCEPT
SCALE: 1" = 100'

N

100' 0'-0" 100' 200'
SCALE: 1" = 100'

SHEET ____ OF 400

NO.	DATE	DRAWN	REVISIONS -	CHK'D	APP'D
			NOT FOR CONSTRUCTION		

NO.	DATE	DRAWN	REVISIONS -	CHK'D	APP'D
			80% DESIGN		

Jacobs
2600 MICHELSON DRIVE, SUITE 500
IRVINE, CA 92612
P: (949) 224-7500
F: (949) 224-7501

SCALE: 1"=100'
DRAWN: T. PALUSZKIEWICZ
CHECKED: A. BENCINI
DESIGNED: J. HANNA
ENGINEER / ARCHITECT

TERMINAL ISLAND GRADE SEPARATION

PROJECT SITE LIMIT COORDINATE CONTROL PLAN

THE PORT OF LOS ANGELES
ENGINEERING DIVISION
425 S. PALOS VERDES STREET SAN PEDRO CA 90731-3309

DRAWING NUMBER 1-3497
SHEET NUMBER GN-06

POLAPR21_043023_BWD

GENERAL EXISTING UTILITY NOTES:

1. THE EXISTING UTILITIES AND SUBSTRUCTURES SHOWN ARE APPROXIMATE. THE PRESENCE, LOCATION, SIZE, AND DEPTH OF THE EXISTING UNDERGROUND UTILITIES AS SHOWN ON DRAWINGS WERE OBTAINED FROM RECORD DRAWINGS AND A GROUND PENETRATING RADAR (GPR) SURVEY. NO REPRESENTATION IS MADE AS TO THE ACCURACY OR COMPLETENESS OF SAID UTILITY INFORMATION. GPR POTHOLE REPORT CAN BE FOUND IN BID PACKAGE.
2. IN CONFORMANCE WITH CITY OF LOS ANGELES ORDINANCE NO. 150,478, POTHOLE EXISTING SUBSURFACE INSTALLATIONS CARRYING UNSTABLE SUBSTANCES TO DETERMINE THEIR LOCATIONS AND ELEVATIONS PRIOR TO EXCAVATION.
3. SCHEDULE AND COORDINATE CONSTRUCTION ACTIVITIES WITH ENGINEER, INCLUDING VARIOUS COMPANIES, AGENCIES, AND OTHER CONTRACTORS WHO MAY BE AFFECTED BY THIS WORK.
4. CALL UNDERGROUND SERVICE ALERT (USA) (1-800-422-4133) 2 WORKING DAYS PRIOR TO CONSTRUCTION TO OBTAIN A DIG ALERT ID NUMBER,PROVIDE THE REFERENCE NUMBER OF THE DIG ALERT CONTACT AND THE ACTION BY DIG ALERT TO ENGINEER.
5. FIELD VERIFY DIMENSIONS FOR CONFLICTS WITH EXISTING UTILITY, SIGNAL CABLES/EQUIPMENT, AND OTHER ITEMS THAT MIGHT IMPAIR CONSTRUCTION ACTIVITIES. NOTIFY ENGINEER IMMEDIATELY WHEREVER UTILITIES ARE ENCOUNTERED THAT ARE NOT SHOWN ON DRAWINGS.
6. UNLESS OTHERWISE NOTED EXISTING UTILITIES WILL BE "PROTECT-IN-PLACE", UTILITIES DAMAGED DURING CONSTRUCTION SHALL BE REPAIRED OR REPLACED AND RECONNECTED AS REQUIRED FOR A COMPLETE OPERATING SYSTEM AT NO ADDITIONAL COST TO DEPARTMENT.
7. PRIOR TO COMMENCING WORK, FIELD VERIFY EXISTING SITE CONDITIONS WITH ENGINEER TO ASCERTAIN THE LIMIT OF WORK ACTIVITIES.
8. REFER TO T-SHEETS FOR LISTING OF REFERENCE DRAWINGS.
9. PROTECT EQUIPMENT, UTILITY LINES, AND MATERIALS WHEN WORKING ON FINISHED SURFACES, LIMIT DAMAGE TO THE CONFINED SPACE AND RESTORE TO THE ORIGINAL CONDITIONS SURFACES WHICH ARE DAMAGED BECAUSE OF THE INSTALLATION OF THIS CONTRACT WORK.
10. SHOULD CONFLICTING INFORMATION BE FOUND ON DRAWINGS, NOTIFY ENGINEER BEFORE PROCEEDING WITH WORK IN QUESTION.
11. CONTACT UTILITY OWNERS TO VERIFY LOCATIONS OF SUBSTRUCTURES PRIOR TO EXCAVATION.
12. WHERE CROSSING ANY EXISTING SUBSTRUCTURES WITH NEW SUBSURFACE IMPROVEMENTS, TRENCH CAREFULLY TO LOCATE ACTIVE AND IDLE SUBSTRUCTURES AT THESE CROSSINGS.
13. EXISTING LA DWP POLES WITHIN THE PROJECT SITE LIMITS ARE BEING REMOVED AND RELOCATED BY LA DWP AS A SEPARATE PROJECT [NIC].
14. WHEN TRENCHING, PLACE DETECTION TAPE OVER ENCOUNTERED EXISTING UTILITY LINES PER SPECIFICATIONS.
15. REFER TO POTHOLE REPORT FOR ADDITIONAL INFORMATION.
16. SEE DEMO AND REMOVAL PLANS FOR ALL SURFACE FEATURES TO BE REMOVED. SUCH AS PULL BOXES, CURB INLETS, SIGNAL POLES, STREET LIGHTS, MANHOLES, ECT.
17. REFER TO SD SHEETS FOR STORM DRAIN STRUCTURE REMOVALS & REPLACEMENTS.
18. PROPERLY CAP AND MONUMENT REMOVED UTILITIES, AT THEIR TERMINATION POINT, TO THE STANDARDS OF THE GOVERNING AGENCY OR COMPANY.

ABBREVIATIONS

ACP	ASBESTOS CEMENT PIPE
CIP	CAST IRON PIPE
DIP	DUCTILE IRON PIPE
FED	FEDERAL
HP	HIGH PRESSURE
LA DWP	LOS ANGELES DEPARTMENT OF WATER AND POWER
OH	OVERHEAD
PH	POTHOLE
PP	POWER POLE
RCP	REINFORCED CONCRETE PIPE
SD	STORM DRAIN
UG	UNDERGROUND

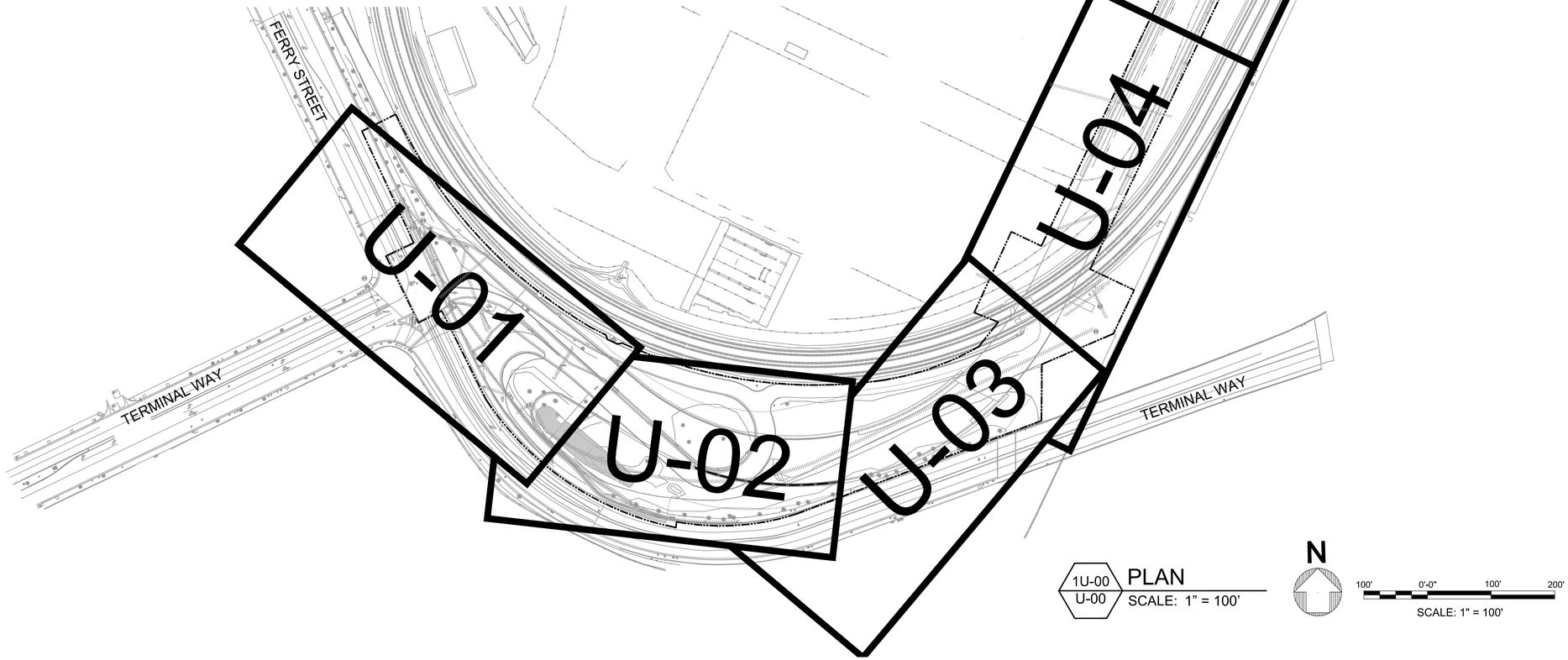

LEGEND

UTILITY LINE TO BE REMOVED. CUT, CAP & REMOVE PORTIONS IN CONFLICT. DO NOT BEGIN WORK UNTIL LINES ARE CONFIRMED AS INACTIVE

PROJECT SITE LIMIT LINE

POTHOLE (PH)

1U-00 / U-00 PLAN
SCALE: 1" = 100'

N

100' 0'-0" 100' 200'
SCALE: 1" = 100'

SHEET ____ OF 400

NO.	DATE	DRAWN	REVISIONS -	CHK'D	APP'D
			NOT FOR CONSTRUCTION		

NO.	DATE	DRAWN	REVISIONS -	CHK'D	APP'D
			80% DESIGN		

Jacobs
2600 MICHELSON DRIVE, SUITE 500
IRVINE, CA 92612
T (949) 224-7500
F (949) 224-7501

SCALE: 1"=100'
DRAWN: D. NGUYEN
CHECKED: A. BENCINI
DESIGNED: J. HANNA
ENGINEER / ARCHITECT

TERMINAL ISLAND GRADE SEPARATION

EXISTING COMPOSITE UTILITY PLAN - KEY MAP

THE PORT OF LOS ANGELES
ENGINEERING DIVISION
425 S. PALOS VERDES STREET SAN PEDRO CA 90731-3309

DRAWING NUMBER 1-3497
SHEET NUMBER U-00

POLAPR21_043023_BWD

8" HP GAS (SCG)
60" RCP CITY OF LA SEWER (7-383-4)
30" ACP CITY OF LA SEWER (6-1213/D-23970)
24" LA DWP WATER (9-623)
30" RCP CITY OF LA SEWER ABANDONED (6-1213)
30" ACP CITY OF LA SEWER
20" CIP SEWER
PH 5
DRY HOLE
UNKNOWN DEPTH
PH 4
8" GAS
4.80' DEPTH
UG ELECTRIC
18" RCP SD (POLA)(1-2033)
20" RCP SEWER ABANDONED CITY OF LA
OH ELECTRIC (REMOVE BY OTHERS)[NIC]
UG TELEPHONE (OWNER UNKNOWN)
24"RCP SD (POLA)(1-2033)
STA 10+00.00 "A" LINE
= STA 29+36.46 "TWX" LINE
UG ELECTRIC (POLA)(1-2016)
DAYLIGHT LINE
UG ELECTRIC (POLA)(1-2016)
24" RCP SD (1-2016)
UG ELECTRIC (POLA)(1-2016)
18" RCP SD (POLA)(1-2033)
STREET LIGHT CONDUIT (POLA)(1-2016)
FERRY STREET
"FE" LINE
28+00
"A" LINE
11+00
12+00
13+00
"A" LINE
13+00
18" RCP SD
STREET LIGHT CONDUIT (ABANDON) (POLA)
LA DWP ELECTRIC
SEWER ABANDONED (SIZE UNKNOWN)
12" LA DWP WATER
12" CIP FED SEWER
36" DIP CITY OF LA SEWER (D-31191/1-2372)
PH 3
12" SEWER
2.78' DEPTH
SEWER (SIZE UNKNOWN)
SEWER (SIZE UNKNOWN)
PH 2
8" GAS
5.14' DEPTH
20" CIP SEWER
4-4" UG TELEPHONE (AT&T) (9-666-2)
8" HP GAS (SCG) (1370-2)(2-2195)
PH 1
8" UTILITY UNKNOWN
3.79' DEPTH
30" ACP CITY OF LA SEWER (6-1213/D-23970)
29+00
10+00
100+00
30+00
"TWX" LINE
31+00
32+00
"TW" LINE
101+00
STREET LIGHT CONDUIT (POLA) (1-2033)
18" SD (POLA)(1-2033)
"B" LINE
12+00
24" LA DWP WATER (1-2033)
11+00
MATCHLINE STA 13+50 SEE SHEET U-02
12" SD (POLA)(1-2033)
39" CIP CITY OF LA SEWER
PH 7
DRY HOLE
UNKNOWN DEPTH
PH 6
12" WATER
2.59' DEPTH
20" CIP CITY OF LA SEWER ABANDONED
LA DWP ELECTRIC
24" RCP SD (1-1833)
12" LA DWP WATER
24" LA DWP WATER
OH ELECTRIC
39" RCP SD (6-770/D-3549) (6-853/D-15725)
24" RCP SD (1-2033)
39" RCP CITY OF LA SEWER (6-853)
60" RCP CITY OF LA SEWER (7-383-4)
30" CIP SEWER ABANDONED (6-770)
30" CIP CITY OF LA SEWER ABANDONED
PROJECT SITE LIMIT LINE
8" LA DWP WATER (1-2033)
PH 8
24" WATER
3.44' DEPTH
TERMINAL WAY
TERMINAL WAY
CNC

LEGEND

UTILITY LINE TO BE REMOVED. CUT, CAP & REMOVE PORTIONS IN CONFLICT. DO NOT BEGIN WORK UNTIL LINES ARE CONFIRMED AS INACTIVE

PROJECT SITE LIMIT LINE

POTHOLE (PH)

KEY MAP

N

1U-01 / U-01 PLAN
SCALE: 1"=20'

N

20' 0'-0" 20' 40'
SCALE: 1" = 20'

SHEET ____ OF 400

NO.	DATE	DRAWN	REVISIONS -	CHK'D	APP'D
			NOT FOR CONSTRUCTION		

NO.	DATE	DRAWN	REVISIONS -	CHK'D	APP'D
			80% DESIGN		

Jacobs
2600 MICHELSON DRIVE, SUITE 500
IRVINE, CA 92612
T: (949) 224-7500
F: (949) 224-7501

SCALE: 1"=20'
DRAWN: D. NGUYEN
CHECKED: A. BENCINI
DESIGNED: J. HANNA
ENGINEER / ARCHITECT

TERMINAL ISLAND GRADE SEPARATION

EXISTING COMPOSITE UTILITY PLAN - 1

THE PORT OF LOS ANGELES
ENGINEERING DIVISION
425 S. PALOS VERDES STREET SAN PEDRO CA 90731-3309

DRAWING NUMBER: 1-3497
SHEET NUMBER: U-01

POLAPRD1_04/2023_BWD

LEGEND

UTILITY LINE TO BE REMOVED. CUT, CAP & REMOVE PORTIONS IN CONFLICT. DO NOT BEGIN WORK UNTIL LINES ARE CONFIRMED AS INACTIVE

PROJECT SITE LIMIT LINE

POTHOLE (PH)

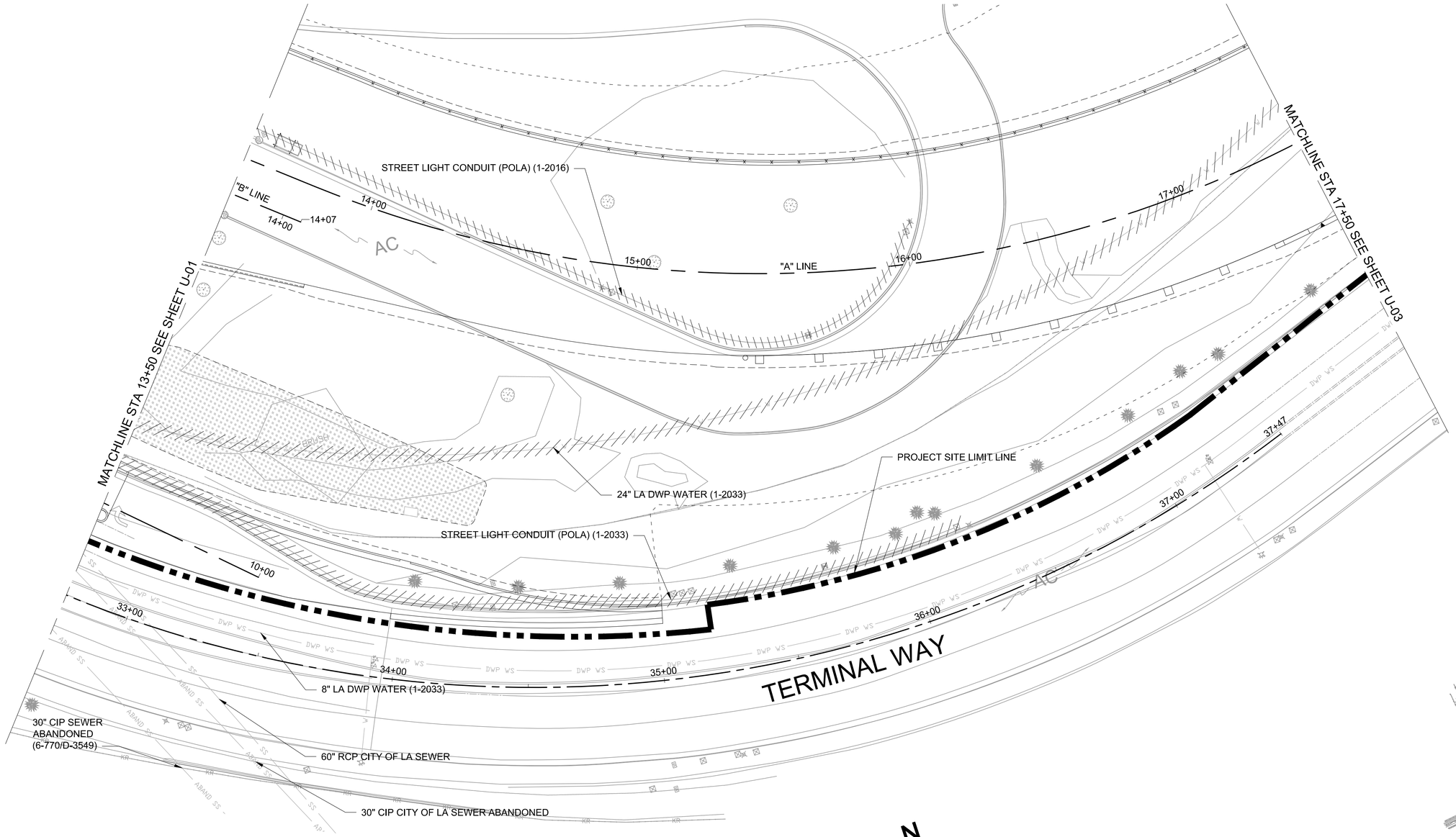

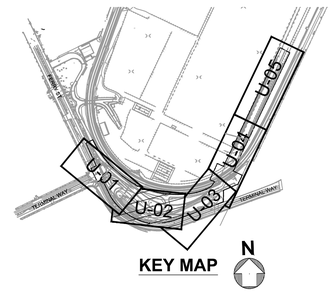

1U-02 / U-02 PLAN
SCALE: 1"=20'

N

20' 0'-0" 20' 40'
SCALE 1" = 20'

SHEET ____ OF 400

NO.	DATE	DRAWN	REVISIONS -	CHK'D	APP'D
			NOT FOR CONSTRUCTION		

NO.	DATE	DRAWN	REVISIONS -	CHK'D	APP'D
			80% DESIGN		

Jacobs
2600 MICHELSON DRIVE, SUITE 500
IRVINE, CA 92612
T: (949) 224-7500
F: (949) 224-7501

SCALE: 1"=20'
DRAWN: D. NGUYEN
CHECKED: A. BENCINI
DESIGNED: J. HANNA
ENGINEER / ARCHITECT

TERMINAL ISLAND GRADE SEPARATION

EXISTING COMPOSITE UTILITY PLAN - 2

THE PORT OF LOS ANGELES
ENGINEERING DIVISION
425 S. PALOS VERDES STREET SAN PEDRO CA 90731-3309

DRAWING NUMBER 1-3497
SHEET NUMBER U-02

LEGEND

UTILITY LINE TO BE REMOVED. CUT, CAP & REMOVE PORTIONS IN CONFLICT. DO NOT BEGIN WORK UNTIL LINES ARE CONFIRMED AS INACTIVE

PROJECT SITE LIMIT LINE

POTHOLE (PH)

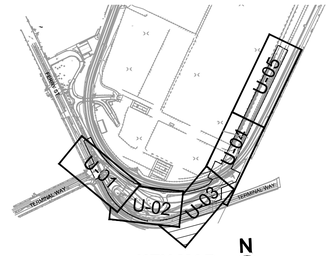

KEY MAP N

MATCHLINE STA 17+50 SEE SHEET U-02

18+00

19+00

20+00

21+00

22+00

"A" LINE

23+00

PROJECT SITE LIMIT LINE

UG ELECTRIC (POLA)(1-2016)

UG ELECTRIC ABANDONED (POLA)(1-2016)

WATER ABANDONED (POLA) (1-2779)

UG ELECTRIC (ABANDON) (POLA) (1-2016)

BENT 2

8" LA DWP WATER (1-2033)

ABUTMENT 1

24" LA DWP WATER (1-2033)

UG ELECTRIC (POLA)(1-2016)

BRIDGE OUTRIGGER

PH 10
UNKNOWN UTILITY
3.57' DEPTH

PH 9
DRY HOLE
UNKNOWN DEPTH

24" WATER ABANDONED (POLA) (1-2779)

12" SD ABANDONED (RELOCATE)(POLA)

42" RCP SD (POLA)(7-354-1)

MATCHLINE STA 23+50 SEE SHEET U-04

1U-03
U-03 PLAN
SCALE: 1"=20'

20' 0'-0" 20' 40'
SCALE: 1" = 20'

SHEET ____ OF 400

NO.	DATE	DRAWN	REVISIONS -	CHK'D	APP'D
			NOT FOR CONSTRUCTION		

NO.	DATE	DRAWN	REVISIONS -	CHK'D	APP'D
			80% DESIGN		

Jacobs
2600 MICHELSON DRIVE, SUITE 500
IRVINE, CA 92612
T: (949) 224-7500
F: (949) 224-7501

SCALE: 1"=20'
DRAWN: D. NGUYEN
CHECKED: A. BENCINI
DESIGNED: J. HANNA
ENGINEER / ARCHITECT

TERMINAL ISLAND GRADE SEPARATION

EXISTING COMPOSITE UTILITY PLAN - 3

THE PORT OF LOS ANGELES
ENGINEERING DIVISION
425 S. PALOS VERDES STREET SAN PEDRO CA 90731-3309

DRAWING NUMBER 1-3497
SHEET NUMBER U-03

POLAPR01_040223_BWD

LEGEND

UTILITY LINE TO BE REMOVED. CUT, CAP & REMOVE PORTIONS IN CONFLICT. DO NOT BEGIN WORK UNTIL LINES ARE CONFIRMED AS INACTIVE

PROJECT SITE LIMIT LINE

POTHOLE (PH)

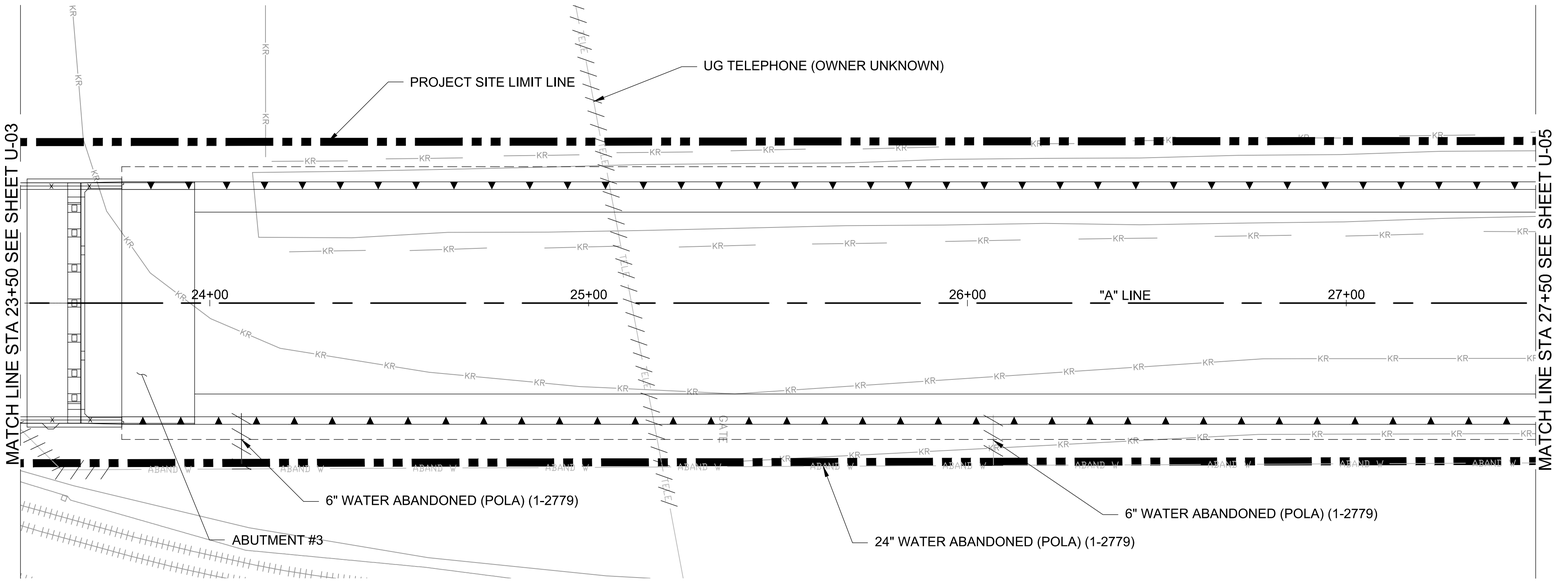

1U-04 / U-04 PLAN

SCALE: 1"=20'

N

20' 0'-0" 20' 40'

SCALE: 1" = 20'

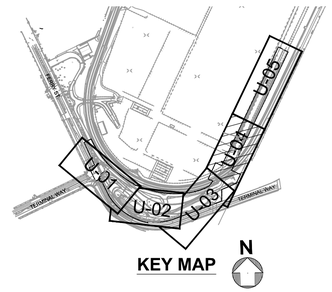

SHEET ____ OF 400

NO.	DATE	DRAWN	REVISIONS -	CHK'D	APP'D
			NOT FOR CONSTRUCTION		

NO.	DATE	DRAWN	REVISIONS -	CHK'D	APP'D
			80% DESIGN		

Jacobs
2600 MICHELSON DRIVE, SUITE 500
IRVINE, CA 92612
T: (949) 224-7500
F: (949) 224-7501

SCALE: 1"=20'
DRAWN: D. NGUYEN
CHECKED: A. BENCINI
DESIGNED: J. HANNA
ENGINEER / ARCHITECT

TERMINAL ISLAND GRADE SEPARATION

EXISTING COMPOSITE UTILITY PLAN - 4

THE PORT OF LOS ANGELES
ENGINEERING DIVISION
425 S. PALOS VERDES STREET SAN PEDRO CA 90731-3309

DRAWING NUMBER: 1-3497
SHEET NUMBER: U-04

POLAPRD1_04/2023_BW3

LEGEND

UTILITY LINE TO BE REMOVED. CUT, CAP & REMOVE PORTIONS IN CONFLICT. DO NOT BEGIN WORK UNTIL LINES ARE CONFIRMED AS INACTIVE

PROJECT SITE LIMIT LINE

POTHOLE (PH)

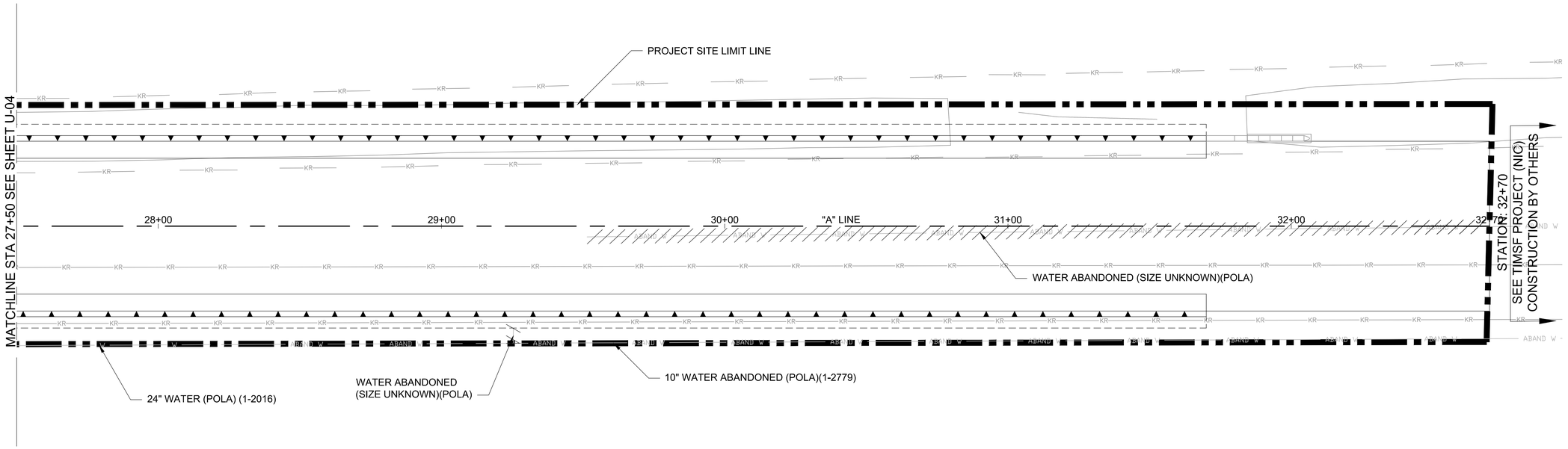

1U-05 / U-05 PLAN
SCALE: 1"=20'

20' 0'-0" 20' 40'
SCALE: 1" = 20'

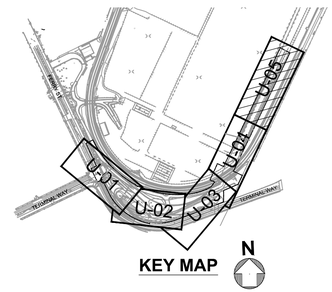

SHEET ____ OF 400

NO.	DATE	DRAWN	REVISIONS -	CHK'D	APP'D
			NOT FOR CONSTRUCTION		

NO.	DATE	DRAWN	REVISIONS -	CHK'D	APP'D
			80% DESIGN		

Jacobs
2600 MICHELSON DRIVE, SUITE 500
IRVINE, CA 92612
T: (949) 224-7500
F: (949) 224-7501

SCALE: 1"=20'
DRAWN: D. NGUYEN
CHECKED: A. BENCINI
DESIGNED: J. HANNA
ENGINEER / ARCHITECT

TERMINAL ISLAND GRADE SEPARATION

EXISTING COMPOSITE UTILITY PLAN - 5

THE PORT OF LOS ANGELES
ENGINEERING DIVISION
425 S. PALOS VERDES STREET SAN PEDRO CA 90731-3309

DRAWING NUMBER: 1-3497
SHEET NUMBER: U-05

POLAPR01_043023_BWD

GENERAL REMOVAL NOTES:

1. PRIOR TO COMMENCING WORK, EXISTING SITE CONDITIONS SHALL BE FIELD VERIFIED WITH ENGINEER TO CONFIRM THE LIMIT OF WORK ACTIVITIES. EACH ITEM OF WORK SHALL BE DESCRIBED AND ACCOUNTED FOR IN CONTRACT DOCUMENTS.
2. DEBRIS SHALL BE WET AT TIME OF HANDLING TO PREVENT DUST.
3. APPROVAL OF PROTECTION FENCES AND CANOPIES IS REQUIRED PRIOR TO DEMOLITION.
4. VOIDS CAUSED BY DEMOLITION AND REMOVALS SHALL BE FILLED AND COMPACTED AS SPECIFIED.
5. DE-ENERGIZE ELECTRICAL WIRING AND EQUIPMENT PRIOR TO REMOVAL. CONTACT ENGINEER 48 HOURS PRIOR TO WORK.
6. DETAILS OF EXISTING FIELD CONDITIONS SHOWN ON DRAWINGS ARE APPROXIMATE. FIELD VERIFY EXISTING CONDITIONS.
7. ITEMS OUTSIDE OF REMOVAL LIMITS AND CALLED OUT AS EXISTING SHALL REMAIN AND BE PROTECTED IN PLACE, RESPECTIVELY, UNLESS OTHERWISE NOTED.
8. REMOVAL LIMIT OF PAVEMENT, SIDEWALK, CURB, GUTTER, AND THE LIKE, SHALL BE PER DRAWINGS AND VERIFIED WITH ENGINEER PRIOR TO REMOVAL. SEE SHEET R-01 THROUGH R-03 FOR COORDINATE INFORMATION.
9. REPAIR, AT NO COST TO DEPARTMENT, ANYTHING DAMAGED OUTSIDE OF THE REMOVAL LIMITS OR ANYTHING NOT CALLED OUT FOR REMOVAL.
10. EXISTING ELEVATIONS, DIMENSIONS, DETAILS, AND SECTIONS SHOWN HEREIN ARE FOR GENERAL INFORMATION ONLY. FIELD VERIFY TO CONFIRM ACTUAL CONDITIONS.
11. EXISTING CHAIN LINK FENCE TO REMAIN, UNLESS OTHERWISE SPECIFIED ON DRAWINGS. ANY DAMAGE CAUSED TO THE CHAIN LINK FENCE SHALL BE REPLACED WITH NEW CHAIN LINK FENCE AT CONTRACTOR'S SOLE COST AND EXPENSE.
12. ELEVATIONS ARE REFERENCED USING MEAN LOWER LOW WATER AT ELEVATION 0'-0".
13. EXISTING UTILITY MARKERS SHALL BE RELOCATED BY THE CORRESPONDING UTILITY COMPANY. CONTRACTOR SHALL COORDINATE RELOCATIONS. REFER TO SPECIFICATIONS FOR UTILITY CONTACTS.
14. UNLESS OTHERWISE NOTED, EXISTING ITEMS MUST BE PROTECTED IN PLACE.
15. MAINTAIN A TEMPORARY FENCE ALONG REMOVAL LIMITS FOR THE DURATION OF THE CONTRACT.
16. IF ANY HAZARDOUS MATERIALS ARE ENCOUNTERED DURING DEMOLITION STOP WORK AND NOTIFY ENGINEER.
17. SOUTH COAST AIR QUALITY MANAGEMENT DISTRICT (SCAQMD) APPROVAL IS REQUIRED FOR ASBESTOS ABATEMENT PRIOR TO COMMENCING WORK. (NOTE SCAQMD REQUIRES 10 WORKING DAYS WAITING PERIOD PRIOR TO PERMIT).
18. EXCAVATIONS SHALL MEET REGULATIONS AND BE PROTECTED IN AREAS ADJACENT TO PUBLIC ACCESS.
19. NOTIFY ENGINEER IMMEDIATELY WHEREVER EXISTING EQUIPMENT IS ENCOUNTERED WHICH MUST BE RELOCATED DUE TO THE NEW CONSTRUCTION.
20. PROVIDE DUST CONTROL FOR THE DURATION OF DEMOLITION ACTIVITIES.
21. ANY VERTICAL EARTH CUTS CREATED BY DEMOLITION SHALL BE GRADED AT 1:1 MAXIMUM. UNLESS OTHERWISE SPECIFIED BY A GEOTECHNICAL REPORT.
22. DISPOSE MATERIAL PER SPECIFICATIONS.
23. FOR ABOVE AND BELOW GROUND UTILITIES RELATED REMOVALS SEE U SHEETS.
24. REFER TO C SHEETS FOR ASPHALT RESURFACING EXTENTS.
25. PROJECT SITE SHALL BE CLEARED AND CLEANED OF DEBRIS PRIOR TO GRADING.
26. REMOVE VEGETATION, INCLUDING TREES WITHIN THE REMOVAL LIMITS, UNLESS OTHERWISE SPECIFIED ON DRAWINGS.
27. REMOVE WHEEL STOPS, AND GUARD POSTS WITHIN THE REMOVAL LIMITS, UNLESS OTHERWISE SPECIFIED ON DRAWINGS.
28. REMOVE WIRING IN CONDUITS ASSOCIATED WITH ITEMS REMOVED.
29. DEMOLISH AND REMOVE EXISTING BUILDING STRUCTURES COMPLETELY; INCLUDING FOUNDATION, FOOTINGS AND UTILITIES AS INDICATED ON DRAWINGS.
30. ALL POLE REMOVALS (SIGNAL, LIGHT, UTILITY, HIGH-MAST) INCLUDE REMOVAL OF THE ENTIRE STRUCTURE INCLUSIVE OF THE FOUNDATIONS, SUPPORT AND ALL ASSOCIATED/ATTACHED ITEMS.
31. SAWCUT AND REMOVE ASPHALT CONCRETE PAVEMENT AS INDICATED, AND PROTECT REMAINING PORTION FROM SIGNIFICANT DAMAGE; CLEAN, PATCH, REPAIR, WHEN DEMOLITION IS COMPLETE.
32. PROPERLY CAP AND MONUMENT REMOVED UTILITIES, AT THEIR TERMINATION POINT, TO THE STANDARDS OF THE GOVERNING AGENCY OR COMPANY.
33. SUBMIT TO ENGINEER A DEMOLITION PLAN FOR THE REMOVAL OF STRUCTURES FOR APPROVAL.
34. PROVIDE AN 8-FOOT-HIGH CHAIN LINK FENCE TO PREVENT UNAUTHORIZED ENTRY TO THE VACANT LOT AFTER DEMOLITION.
35. PROVIDE POWER DURING CONSTRUCTION. DEPARTMENT IS NOT PROVIDING POWER TO PROJECT SITE DURING THE CONSTRUCTION PERIOD.
36. REMOVE, STOCKPILE, AND REUSE EXISTING BASE MATERIAL PER ROADWAY PLANS, PROVIDED IT IS NOT CHEMICALLY IMPACTED.
37. REMOVE ASBESTOS CONTAINING MATERIALS DISCOVERED (E.G. IN THE GUARD HOUSE) ACCORDING TO LOCAL REGULATIONS.
38. REMOVED HIGH MAST LIGHTS (HIGH MAST, STREET LIGHT FIXTURES & POLES) ARE TO BE SALVAGED & DELIVERED TO A SPECIFIED LOCATION AS DIRECTED BY POLA.
39. ALL SIGN REMOVALS INCLUDE REMOVAL OF THE POSTS AND FOUNDATION.
40. REFERENCE "TS" SHEETS FOR REMOVAL OF TRAFFIC-SIGNAL ITEMS
41. REFERENCE "EL" SHEETS FOR REMOVAL OF LIGHTING ITEMS
42. WAYFINDING SIGN RELOCATIONS INCLUDE REMOVAL OF THE EXISTING FOUNDATIONS

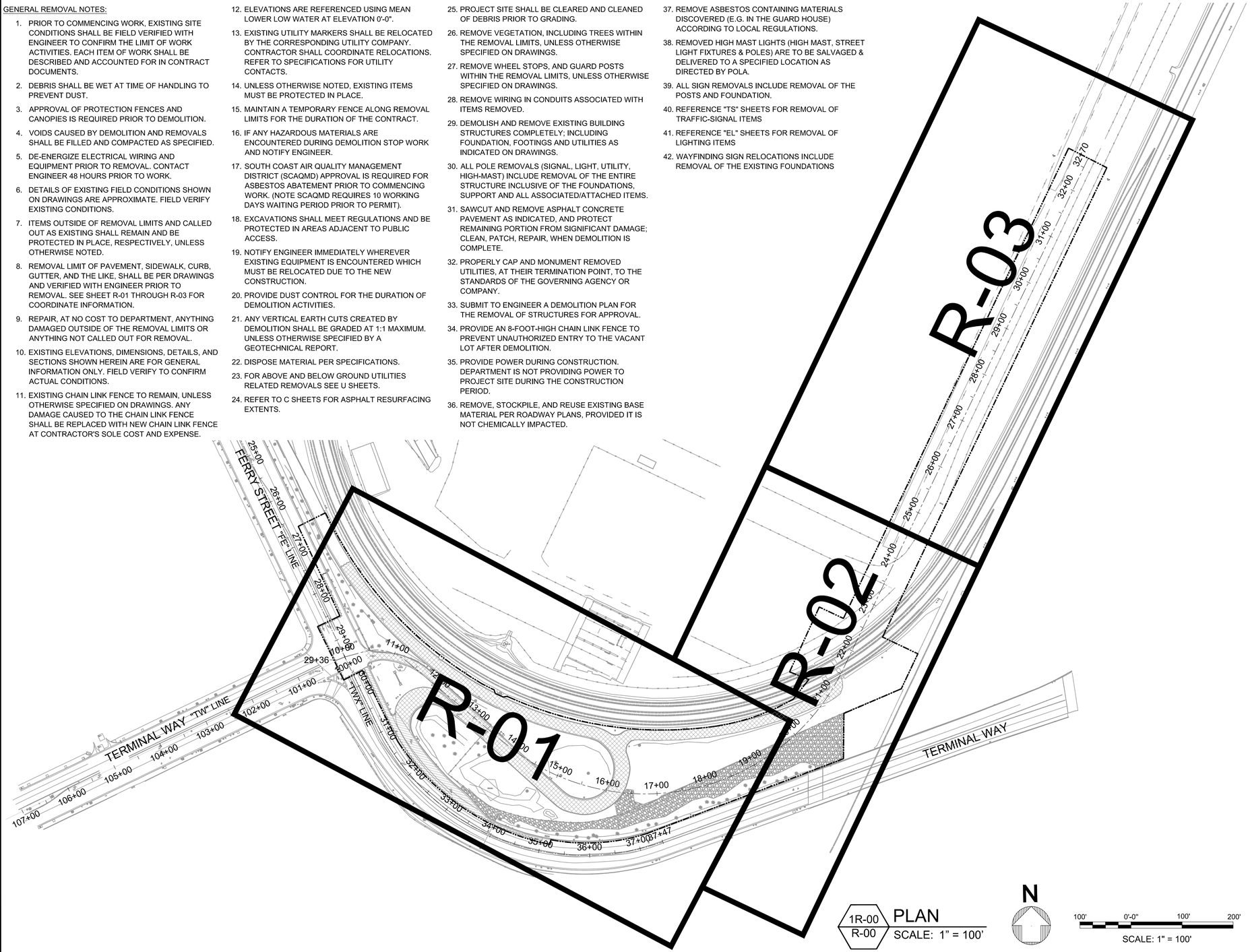

1R-00 / R-00 PLAN
SCALE: 1" = 100'

N

100' 0'-0" 100' 200'
SCALE: 1" = 100'

CONSTRUCTION NOTES

LEGEND OF CONSTRUCTION NOTES

COORDINATE	
CONSTRUCT	REMODEL EXISTING
EXISTING	REMOVE & CONSTRUCT
REMOVE	RELOCATE
NOT IN CONTRACT (NIC)	ABANDON

No.	CONSTRUCTION ITEM	REFERENCE DWG
1	CONCRETE CURB	S-410-2
2	TYPE C INTEGRAL CURB & GUTTER (a=2.0', b=0.5')	S-410-2
8	CONCRETE PAVEMENT	
14	ASPHALT CONCRETE PAVEMENT (C2-PG 70-10)	
16	CRUSHED MISC BASE (CMB)	
18	METAL BEAM GUARDRAIL	
20	TREE	
24	PALM TREE	
41	FIRE HYDRANT	
46	WAYFINDING SIGN	
47	SIGN	
48	PULL BOX	
87	CATCH BASIN	LABOE S-351-1
166	MANHOLE	
170	SIGNAL POLE W/ MAST ARM & STREET LIGHT	
171	1-A SIGNAL POLE	
172	UTILITY POLE AND GUY WIRE (NIC)	
173	STREET LIGHT POLE	
174	RAILROAD TRACK (CONSISTS OF RAILS, BALLAST ROCK AND WOOD TIES)	
175	60' HIGH MAST LIGHT POLE	
176	CONVEYOR BELT FOUNDATION (SEE DETAIL R-01)	
177	EMBANKMENT RIPRAP	
178	GUARD BOOTH	
180	PAVEMENT MARKER	
240	SINGLE SWING GATE	
243	CHAIN LINK FENCING (6-FT HT, WITH BARBED WIRE POST TOP)	
246	K-RAIL	

ABBREVIATIONS

AC	ASPHALT CONCRETE
CN	CONSTRUCTION NOTES

LEGEND

- CONCRETE PAVEMENT REMOVAL
- AC PAVEMENT REMOVAL
- RIPRAP REMOVAL
- SAWCUT LINE
- PROJECT SITE LIMIT LINE
- CHAIN LINK FENCE

SHEET ____ OF 400

NO.	DATE	DRAWN	REVISIONS -	CHK'D	APP'D
			NOT FOR CONSTRUCTION		

NO.	DATE	DRAWN	REVISIONS -	CHK'D	APP'D
			80% DESIGN		

Jacobs
3500 MICHELSON DRIVE, SUITE 500
IRVINE, CA 92612
T: (949) 224-7300
F: (949) 224-7501

SCALE:	1"=100'
DRAWN:	C. GARCIA
CHECKED:	A. BENCINI
DESIGNED:	J. HANNA
	ENGINEER / ARCHITECT

TERMINAL ISLAND GRADE SEPARATION

DEMOLITION & REMOVAL PLAN - KEY MAP

THE PORT OF LOS ANGELES
ENGINEERING DIVISION
425 S. PALOS VERDES STREET SAN PEDRO CA 90731-3309

DRAWING NUMBER: 1-3497
SHEET NUMBER: R-00

POLAPRO1_04/2023_BWD

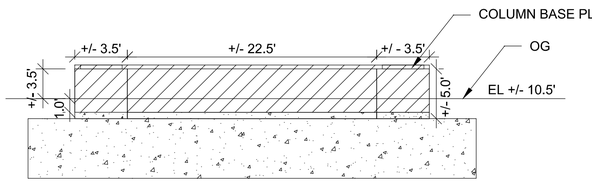

DETAIL - CONVEYOR BELT FOUNDATION
NOT TO SCALE



CONVEYOR BELT FOUNDATION



GUARD BOOTH

1R-01 / R-01 PLAN
SCALE: 1"=40'

N

40' 0'-0" 40' 80'
SCALE: 1" = 40'

CONSTRUCTION NOTES

LEGEND OF CONSTRUCTION NOTES

- COORDINATE
- CONSTRUCT
- EXISTING
- REMOVE
- NOT IN CONTRACT (NIC)
- REMODEL EXISTING
- REMOVE & CONSTRUCT
- RELOCATE
- ABANDON

No.	CONSTRUCTION ITEM	REFERENCE DWG
1	CONCRETE CURB	S-410-2
2	TYPE C INTEGRAL CURB & GUTTER (a=2.0', b=0.5')	S-410-2
8	CONCRETE PAVEMENT	
14	ASPHALT CONCRETE PAVEMENT (C2-PG 70-10)	
16	CRUSHED MISC BASE (CMB)	
18	METAL BEAM GUARDRAIL	
20	TREE	
24	PALM TREE	
41	FIRE HYDRANT	
46	WAYFINDING SIGN	
47	SIGN	
48	PULL BOX	
87	CATCH BASIN	LABOE S-351-1
166	MANHOLE	
170	SIGNAL POLE W/ MAST ARM & STREET LIGHT	
171	1-A SIGNAL POLE	
172	UTILITY POLE AND GUY WIRE (NIC)	
173	STREET LIGHT POLE	
174	RAILROAD TRACK (CONSISTS OF RAILS, BALLAST ROCK AND WOOD TIES)	
175	60' HIGH MAST LIGHT POLE	
176	CONVEYOR BELT FOUNDATION (SEE DETAIL R-01)	
177	EMBANKMENT RIPRAP	
178	GUARD BOOTH	
180	PAVEMENT MARKER	
240	SINGLE SWING GATE	
243	CHAIN LINK FENCING (6-FT HT, WITH BARBED WIRE POST TOP)	
246	K-RAIL	

LEGEND

- CONCRETE PAVEMENT REMOVAL
- AC PAVEMENT REMOVAL
- RIPRAP REMOVAL
- SAWCUT LINE
- PROJECT SITE LIMIT LINE
- CHAIN LINK FENCE

NOTES

1. SEE EXISTING COMPOSITE UTILITY PLAN FOR STORM DRAIN, STREET LIGHT CONDUIT & UTILITY REMOVALS NOT SHOWN ON DEMOLITION AND REMOVAL SHEETS.
2. SEE GRADING & PAVING PLAN FOR LIMITS OF COLD PLANE & OVERLAY
3. SEE LANDSCAPE PLANTING PLAN FOR TREE REMOVALS

TABLES

COORDINATE CONTROL			COORDINATE CONTROL			COORDINATE CONTROL		
#	NORTHING	EASTING	#	NORTHING	EASTING	#	NORTHING	EASTING
1	1729441.04	6482540.55	11	1729450.26	6482565.58	21	1729230.82	6483484.01
2	1729334.23	6482525.42	12	1729463.69	6482586.86	22	1729246.24	6483446.76
3	1729232.38	6482574.26	13	1729223.12	6483525.92	23	1729373.00	6483504.87
4	1728921.86	6482963.27	14	1729235.11	6483547.61	24	1729351.63	6483552.25
5	1729292.71	6482616.03	15	1729436.66	6482531.43	25	1729314.33	6483629.49
6	1729168.62	6482674.33	16	1729355.72	6482570.24	26	1729281.91	6483698.34
7	1729196.61	6482777.03	17	1729252.61	6482613.29	27	1729208.68	6483654.83
8	1729005.47	6483012.21	18	1729160.61	6482657.30	28	1729164.80	6483553.28
9	1729107.91	6483075.42	19	1728947.48	6482866.94	29	1730271.78	6483993.42
10	1729228.33	6482763.79	20	1728915.62	6482961.72	30	1730233.57	6484068.34

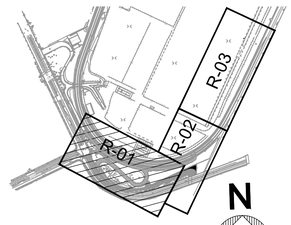

KEY MAP

SHEET ____ OF 400

NO.	DATE	DRAWN	REVISIONS -	CHK'D	APP'D
			NOT FOR CONSTRUCTION		

NO.	DATE	DRAWN	REVISIONS -	CHK'D	APP'D
			80% DESIGN		

Jacobs
300 N. LAKE AVENUE, SUITE 1000
PASADENA, CA 91101
T: (949) 224-7502
F: (949) 224-7501

SCALE: 1"=40"
DRAWN: C. GARCIA
CHECKED: A. BENCINI
DESIGNED: J. HANNA
ENGINEER / ARCHITECT

TERMINAL ISLAND GRADE SEPARATION

DEMOLITION & REMOVAL PLAN - 1

THE PORT OF LOS ANGELES
ENGINEERING DIVISION
425 S. PALOS VERDES STREET SAN PEDRO CA 90731-3309

DRAWING NUMBER 1-3497
SHEET NUMBER R-01

POLAPRD1_040220_BWD

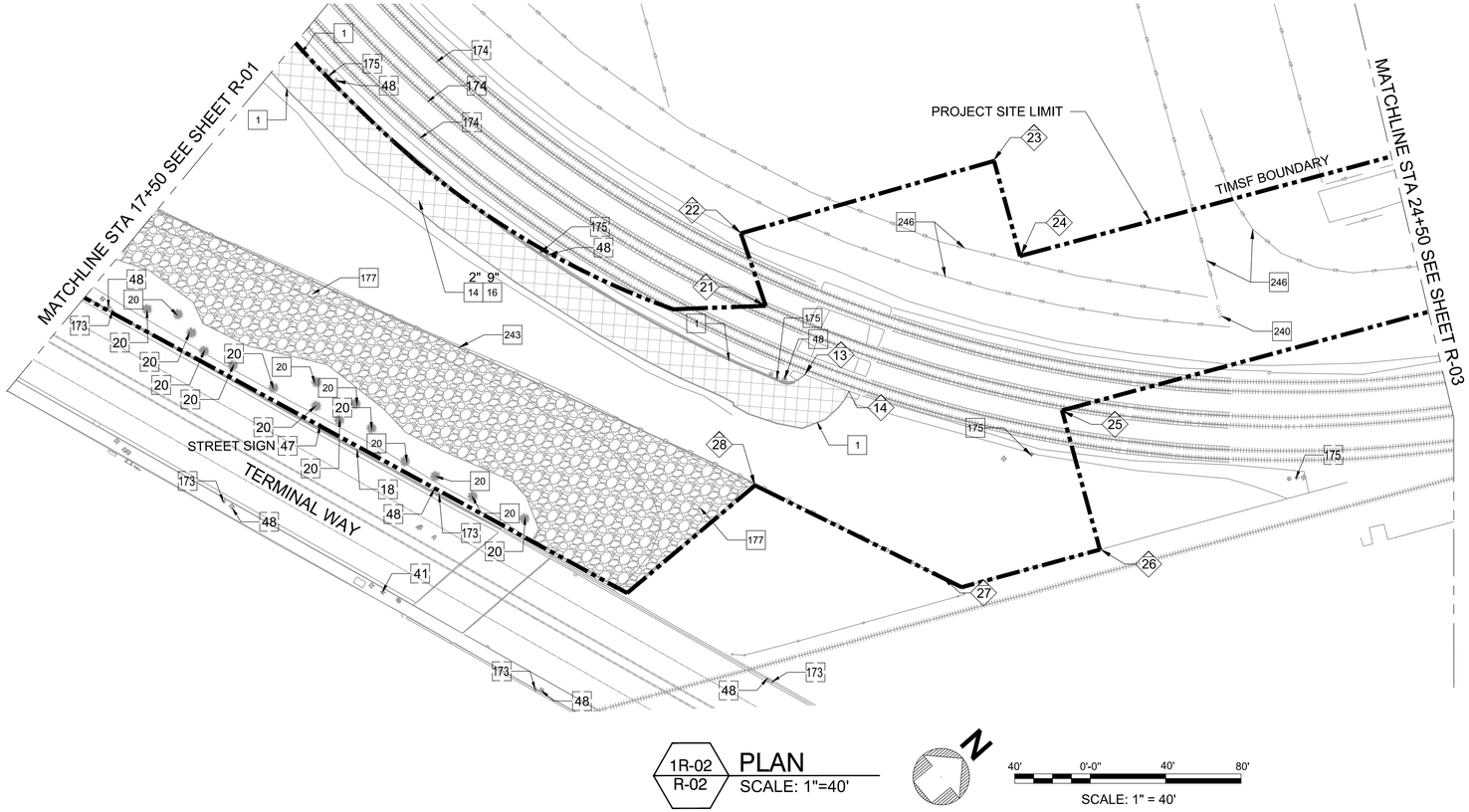

1R-02 / R-02 PLAN
SCALE: 1"=40'

N

40' 0'-0" 40' 80'
SCALE: 1" = 40'

CONSTRUCTION NOTES

LEGEND OF CONSTRUCTION NOTES

COORDINATE
CONSTRUCT
EXISTING
REMOVE
NOT IN CONTRACT (NIC)
REMODEL EXISTING
REMOVE & CONSTRUCT
RELOCATE
ABANDON

No.	CONSTRUCTION ITEM	REFERENCE DWG
1	CONCRETE CURB	S-410-2
2	TYPE C INTEGRAL CURB & GUTTER (a=2.0', b=0.5')	S-410-2
8	CONCRETE PAVEMENT	
14	ASPHALT CONCRETE PAVEMENT (C2-PG 70-10)	
16	CRUSHED MISC BASE (CMB)	
18	METAL BEAM GUARDRAIL	
20	TREE	
24	PALM TREE	
41	FIRE HYDRANT	
46	WAYFINDING SIGN	
47	SIGN	
48	PULL BOX	
87	CATCH BASIN	LABOE S-351-1
166	MANHOLE	
170	SIGNAL POLE W/ MAST ARM & STREET LIGHT	
171	1-A SIGNAL POLE	
172	UTILITY POLE AND GUY WIRE (NIC)	
173	STREET LIGHT POLE	
174	RAILROAD TRACK (CONSISTS OF RAILS, BALLAST ROCK AND WOOD TIES)	
175	60' HIGH MAST LIGHT POLE	
176	CONVEYOR BELT FOUNDATION (SEE DETAIL R-01)	
177	EMBANKMENT RIPRAP	
178	GUARD BOOTH	
180	PAVEMENT MARKER	
240	SINGLE SWING GATE	
243	CHAIN LINK FENCING (6-FT HT, WITH BARBED WIRE POST TOP)	
246	K-RAIL	

LEGEND

CONCRETE PAVEMENT REMOVAL
AC PAVEMENT REMOVAL
RIPRAP REMOVAL
SAWCUT LINE
PROJECT SITE LIMIT LINE
CHAIN LINK FENCE

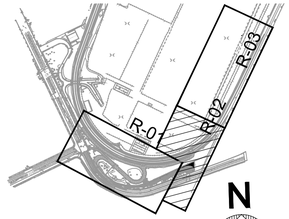

KEY MAP

NOTES

1. SEE EXISTING COMPOSITE UTILITY PLAN FOR STORM DRAIN, STREET LIGHT CONDUIT & UTILITY REMOVALS NOT SHOWN ON DEMOLITION AND REMOVAL SHEETS.
2. SEE GRADING & PAVING PLAN FOR LIMITS OF COLD PLANE & OVERLAY
3. SEE LANDSCAPE PLANTING PLAN FOR TREE REMOVALS

TABLES

COORDINATE CONTROL			COORDINATE CONTROL			COORDINATE CONTROL		
#	NORTHING	EASTING	#	NORTHING	EASTING	#	NORTHING	EASTING
1	1729441.04	6482540.55	11	1729450.26	6482565.58	21	1729230.82	6483484.01
2	1729334.23	6482525.42	12	1729463.69	6482586.86	22	1729246.24	6483446.76
3	1729232.38	6482574.26	13	1729223.12	6483525.92	23	1729373.00	6483504.87
4	1728921.86	6482963.27	14	1729235.11	6483547.61	24	1729351.63	6483552.25
5	1729292.71	6482616.03	15	1729436.66	6482531.43	25	1729314.33	6483629.49
6	1729168.62	6482674.33	16	1729355.72	6482570.24	26	1729281.91	6483698.34
7	1729196.61	6482777.03	17	1729252.61	6482613.29	27	1729208.68	6483654.83
8	1729005.47	6483012.21	18	1729160.61	6482657.30	28	1729164.80	6483553.28
9	1729107.91	6483075.42	19	1728947.48	6482866.94	29	1730271.78	6483993.42
10	1729228.33	6482763.79	20	1728915.62	6482961.72	30	1730233.57	6484068.34

SHEET ____ OF 400

NO.	DATE	DRAWN	REVISIONS -	CHK'D	APP'D
			NOT FOR CONSTRUCTION		

NO.	DATE	DRAWN	REVISIONS -	CHK'D	APP'D
			80% DESIGN		

Jacobs
2920 MICHELSON DRIVE, SUITE 500
IRVINE, CA 92612
T: (949) 224-7500
F: (949) 224-7501

SCALE: 1"=40'
DRAWN: C. GARCIA
CHECKED: A. BENCINI
DESIGNED: J. HANNA
ENGINEER / ARCHITECT

TERMINAL ISLAND GRADE SEPARATION

DEMOLITION & REMOVAL PLAN - 2

THE PORT OF LOS ANGELES
ENGINEERING DIVISION
425 S. PALOS VERDES STREET SAN PEDRO CA 90731-3309

DRAWING NUMBER 1-3497
SHEET NUMBER R-02

POLAPR01_042023_BWD

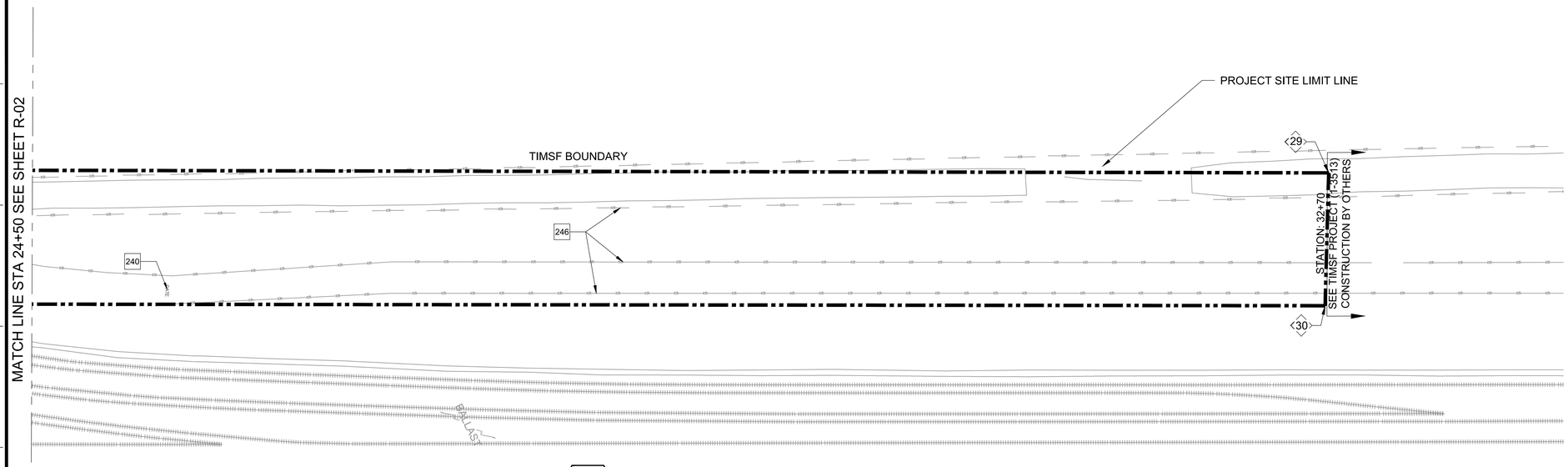

CONSTRUCTION NOTES

LEGEND OF CONSTRUCTION NOTES

- COORDINATE
- CONSTRUCT
- EXISTING
- REMOVE
- NOT IN CONTRACT (NIC)
- REMODEL EXISTING
- REMOVE & CONSTRUCT
- RELOCATE
- ABANDON

No.	CONSTRUCTION ITEM	REFERENCE DWG
1	CONCRETE CURB	S-410-2
2	TYPE C INTEGRAL CURB & GUTTER (a=2.0', b=0.5')	S-410-2
8	CONCRETE PAVEMENT	
14	ASPHALT CONCRETE PAVEMENT (C2-PG 70-10)	
16	CRUSHED MISC BASE (CMB)	
18	METAL BEAM GUARDRAIL	
20	TREE	
24	PALM TREE	
41	FIRE HYDRANT	
46	WAYFINDING SIGN	
47	SIGN	
48	PULL BOX	
87	CATCH BASIN	LABOE S-351-1
166	MANHOLE	
170	SIGNAL POLE W/ MAST ARM & STREET LIGHT	
171	1-A SIGNAL POLE	
172	UTILITY POLE AND GUY WIRE (NIC)	
173	STREET LIGHT POLE	
174	RAILROAD TRACK (CONSISTS OF RAILS, BALLAST ROCK AND WOOD TIES)	
175	60' HIGH MAST LIGHT POLE	
176	CONVEYOR BELT FOUNDATION (SEE DETAIL R-01)	
177	EMBANKMENT RIPRAP	
178	GUARD BOOTH	
180	PAVEMENT MARKER	
240	SINGLE SWING GATE	
243	CHAIN LINK FENCING (6-FT HT, WITH BARBED WIRE POST TOP)	
246	K-RAIL	

LEGEND

- CONCRETE PAVEMENT REMOVAL
- AC PAVEMENT REMOVAL
- RIPRAP REMOVAL
- SAWCUT LINE
- PROJECT SITE LIMIT LINE
- CHAIN LINK FENCE

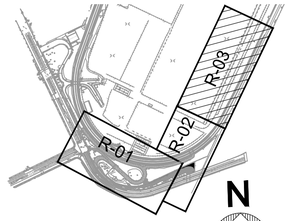

KEY MAP

NOTES

1. SEE EXISTING COMPOSITE UTILITY PLAN FOR STORM DRAIN, STREET LIGHT CONDUIT & UTILITY REMOVALS NOT SHOWN ON DEMOLITION AND REMOVAL SHEETS.
2. SEE GRADING & PAVING PLAN FOR LIMITS OF COLD PLANE & OVERLAY
3. SEE LANDSCAPE PLANTING PLAN FOR TREE REMOVALS

TABLES

COORDINATE CONTROL			COORDINATE CONTROL			COORDINATE CONTROL		
#	NORTHING	EASTING	#	NORTHING	EASTING	#	NORTHING	EASTING
1	1729441.04	6482540.55	11	1729450.26	6482565.58	21	1729230.82	6483484.01
2	1729334.23	6482525.42	12	1729463.69	6482586.86	22	1729246.24	6483446.76
3	1729232.38	6482574.26	13	1729223.12	6483525.92	23	1729373.00	6483504.87
4	1728921.86	6482963.27	14	1729235.11	6483547.61	24	1729351.63	6483552.25
5	1729292.71	6482616.03	15	1729436.66	6482531.43	25	1729314.33	6483629.49
6	1729168.62	6482674.33	16	1729355.72	6482570.24	26	1729281.91	6483698.34
7	1729196.61	6482777.03	17	1729252.61	6482613.29	27	1729208.68	6483654.83
8	1729005.47	6483012.21	18	1729160.61	6482657.30	28	1729164.80	6483553.28
9	1729107.91	6483075.42	19	1728947.48	6482866.94	29	1730271.78	6483993.42
10	1729228.33	6482763.79	20	1728915.62	6482961.72	30	1730233.57	6484068.34

SHEET ____ OF 400

NO.	DATE	DRAWN	REVISIONS -	CHK'D	APP'D
			NOT FOR CONSTRUCTION		

NO.	DATE	DRAWN	REVISIONS -	CHK'D	APP'D
			80% DESIGN		

Jacobs
2600 MICHELSON DRIVE, SUITE 500
IRVINE, CA 92612
T: (949) 224-7500
F: (949) 224-7501

SCALE: 1"=40'
DRAWN: C. GARCIA
CHECKED: J. BENCINI
DESIGNED: J. HANNA
ENGINEER / ARCHITECT

TERMINAL ISLAND GRADE SEPARATION

DEMOLITION & REMOVAL PLAN - 3

THE PORT OF LOS ANGELES
ENGINEERING DIVISION
425 S. PALOS VERDES STREET SAN PEDRO CA 90731-3309

DRAWING NUMBER 1-3497
SHEET NUMBER R-03

POLAPRO1_04/2023_BWD

PHASING NOTES

1. MAINTAIN ROADWAY TRAFFIC ON PUBLIC STREETS AROUND THE PROJECT SITE, PARTICULARLY FERRY STREET AND TERMINAL WAY. DEBRIS SHALL BE REMOVED AND ANY DAMAGE CAUSED BY CONSTRUCTION ACTIVITIES SHALL BE REPAIRED IMMEDIATELY.
2. CONSTRUCTION WILL BE OCCURRING ON PROJECTS IDENTIFIED HEREON DURING THE DURATION OF THIS CONTRACT. COORDINATE WORK WITH ADJACENT CONTRACTS AND PLAN WORK ACCORDINGLY.
3. DO NOT INTERRUPT TERMINAL OPERATIONS AT ANY TIME. COORDINATE WITH THE ENGINEER.
4. ACCESS THRU THE EXISTING TERMINAL SHALL NOT INTERRUPT TERMINAL OPERATIONS AT ANY TIME.
5. CALL UNDERGROUND SERVICE ALERT AT 1-800-227-2600 OR 811 TO IDENTIFY THE LOCATIONS OF UNDERGROUND UTILITIES THREE (3) DAYS PRIOR TO THE START OF WORK.
6. COORDINATE WITH LADWP FOR WORK ASSOCIATED WITH UTILITIES AND STRUCTURES OWNED BY LADWP THIRTY (30) DAYS PRIOR TO THE START OF WORK. COORDINATE WITH AT&T FOR WORK ASSOCIATED WITH UTILITIES AND STRUCTURES OWNED BY AT&T THIRTY (30) DAYS PRIOR TO THE START OF WORK. COORDINATE WITH ANY OTHER UTILITY OWNERS FOR WORK ASSOCIATED WITH UTILITIES AND STRUCTURES IMPACTED BY THIS PROJECT THIRTY (30) DAYS PRIOR TO THE START OF WORK.
7. CONSTRUCT AND MAINTAIN TEMPORARY FENCE ALONG PHASE LIMITS AT EACH PHASE. WHEN THE CURRENT PHASE IS COMPLETE, REMOVE THE TEMPORARY FENCING ALONG THE PERIMETER OF THE CURRENT PHASE AND BUILD THE FENCE ALONG THE PERIMETER OF THE NEXT PHASE.
8. COORDINATE WITH ADJACENT PROJECTS NOT IN CONTRACT (NIC) FOR ACCESS TO ADJACENT PROJECT AREAS. THE WORK SHALL BE COORDINATED AND CONDUCTED IN A MANNER THAT NO ADJACENT PROJECTS (NIC) ARE INTERRUPTED.
9. CONSTRUCT THE PROPOSED UTILITIES PRIOR TO ANY ABANDONMENT OR REMOVAL OF EXISTING UTILITIES. CONNECTING TO EXISTING WATER SYSTEM SHALL BE MADE ONLY AFTER SUCH SYSTEM IS DEPRESSURIZED BY CONTRACTOR. NO MORE THAN TWO FIRE HYDRANTS SHALL BE OUT OF SERVICE FOR NO MORE THAN 2 HOURS AT A TIME. DISINFECT POTABLE WATER PIPELINES. CONFORM TO AWWA C651 FOR DISINFECTION REQUIREMENTS.
10. COVER TRENCHES WITH STEEL PLATES DURING NON-CONSTRUCTION HOURS. ALL EXCAVATIONS SHALL BE BACKFILLED OR PLATED DURING NON-WORKING HOURS. ASPHALT RAMP SHALL BE PLACED AROUND EACH TRENCH PLATE TO PREVENT PLATE FROM BEING DISLODGED. MONITOR TRENCH PLATES DURING NON-WORKING HOURS TO ENSURE PLATES ARE NOT DISLODGED. NON-SKID TRENCH PLATES SHALL BE USED ON AREAS OPEN TO VEHICULAR TRAFFIC.
11. COORDINATE AND CONDUCT APPROPRIATE TRAFFIC CONTROL AT FERRY ST. AND TERMINAL WAY. AT LEAST ONE TRAFFIC LANE IN EACH DIRECTION SHALL REMAIN OPEN AT ALL TIMES. LOCAL TRAFFIC SHALL NOT BE INTERRUPTED DUE TO CONSTRUCTION ACTIVITIES.
12. ACCUMULATED PRECIPITATION MAY OCCUR DURING CONSTRUCTION. DEWATER ACCUMULATED PRECIPITATION PER PROJECT SPECIFICATIONS AND PREVENT ACCUMULATION OF RUNOFF IN STORM DRAINS UNTIL DOWNSTREAM CONNECTION TO EXISTING STORM DRAINS ARE COMPLETED.
13. THE WORK OF THE PROJECT IS BEING PERFORMED IN COOPERATION WITH THE PACIFIC HARBOR LINE (PHL). COORDINATE THE CONSTRUCTION ACTIVITIES WITH PHL AND COOPERATE WITH PHL. RAIL OPERATIONS TO BE MAINTAINED AT ALL TIMES.
14. COMPLY WITH THE TRAFFIC CONTROL MEASURES OF OTHER CONTRACTORS CONTROLLING PORTIONS OF THE SITE THROUGH WHICH HE TRAVELS AND ALLOW OTHER CONTRACTORS TO TRAVEL THROUGH PORTIONS OF THE SITE IN WHICH THE CONTRACTOR IS WORKING.
15. THE CONSTRUCTION VEHICLES OF BOTH TERMINAL ISLAND GRADE SEPARATION AND TERMINAL ISLAND MARINE SUPPORT FACILITY (NIC) SHALL ACCESS THE SITE THROUGH THE ONE-LANE WIDE EXISTING TUNNEL IN BOTH DIRECTIONS. PROVIDE FLAGGERS TO SAFELY AND EFFICIENTLY DIRECT VEHICLES THROUGH THE TUNNEL.
16. THE VERTICAL CLEARANCE AT THE EXISTING TUNNEL IS RESTRICTED TO 14'. THE HEIGHT OF THE CONSTRUCTION VEHICLE SHALL BE BELOW 14'.

PHASING PLAN						SCHEDULE (MONTHS)																
MILESTONE	PHASE AREA	ACTIVITY DESCRIPTION	START FROM NTP (CD)	FINISH FROM NTP (CD)	DURATION (CD)	1	2	3	4	5	6	7	8	9	10	11	12	13	14	15	16	17	18	19	20	21
1	1A	CONSTRUCT TEMPORARY ACCESS ROAD	30	50	20																					
2	1B	RELOCATE 24" LA DWP WATER LINE	30	70	40																					
3	1C	EXCAVATE FOR STRUCTURES AND UTILITIES, INSTALL UTILITIES IN PHASE 2 AREA, CONSTRUCT RW 723, RW 823, AND GRADE SEPARATION STRUCTURES	30	430	400																					
4	2	CONSTRUCT RW 417, RW 517 AND RW 619 STRUCTURES	230	475	245																					
5	3	CONSTRUCT WEST APPROACH, REMOVE TEMPORARY ACCESS ROAD, LANDSCAPE, AND COMPLETE THE FERRY STREET/TERMINAL WAY STREET IMPROVEMENTS	475	570	95																					

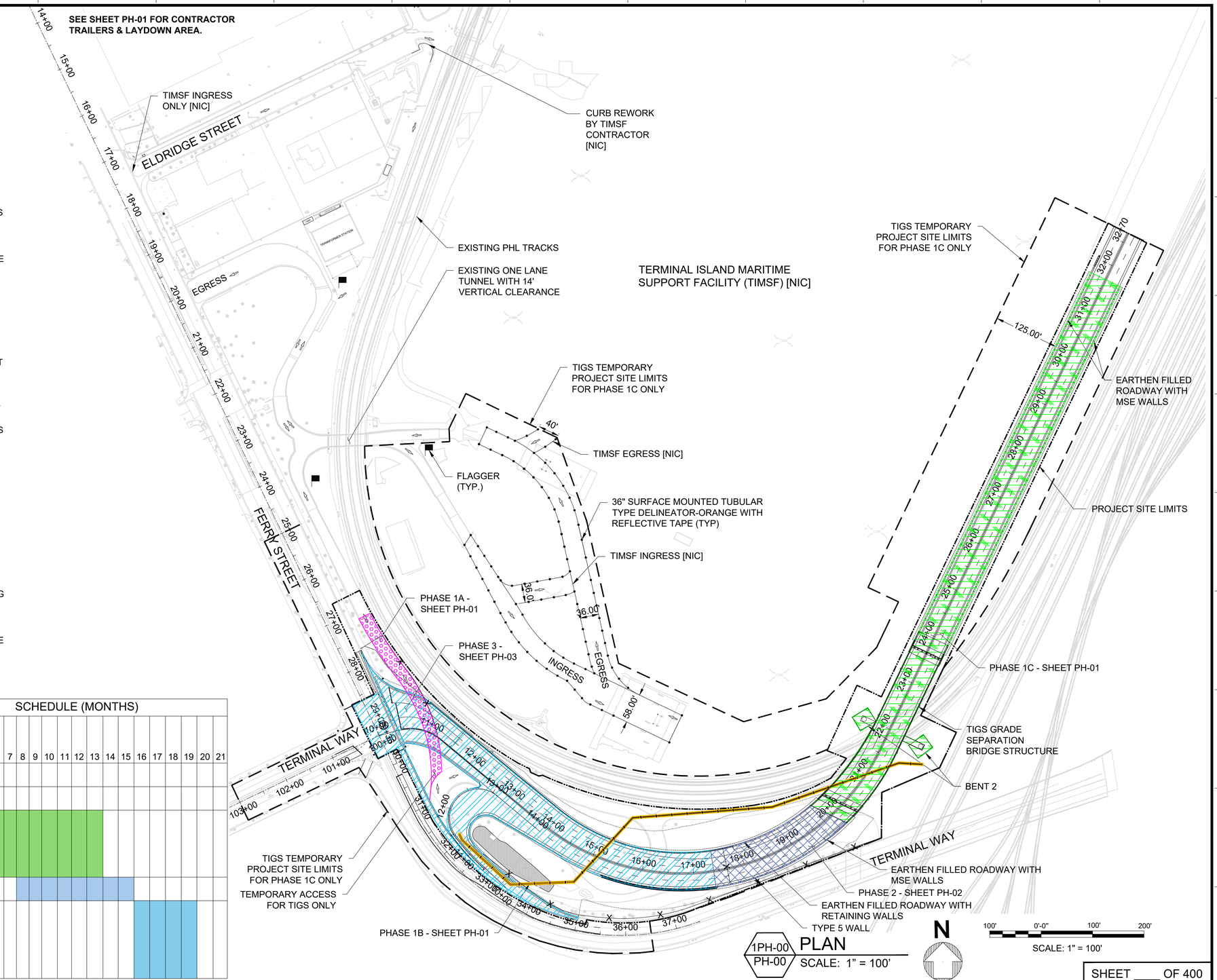

1PH-00 / PH-00 PLAN
SCALE: 1" = 100'

N

100' 0'-0" 100' 200'
SCALE: 1" = 100'

SHEET ____ OF 400

NO.	DATE	DRAWN	REVISIONS -	CHK'D	APP'D
			NOT FOR CONSTRUCTION		

NO.	DATE	DRAWN	REVISIONS -	CHK'D	APP'D
			80% DESIGN		

Jacobs
300 NEXUS SEVEN DRIVE, SUITE 500
IRVINE, CA 92603
T: (949) 224-7502
F: (949) 224-7501

SCALE: 1"=100'
DRAWN: G. HUY
CHECKED: A. BENCINI
DESIGNED: D. NGUYEN
ENGINEER / ARCHITECT

TERMINAL ISLAND GRADE SEPARATION

PHASING PLAN & SCHEDULE

THE PORT OF LOS ANGELES
ENGINEERING DIVISION
425 S. PALOS VERDES STREET SAN PEDRO CA 90731-3309

DRAWING NUMBER: 1-3497
SHEET NUMBER: PH-00

POLAPRDY_040320_BWD

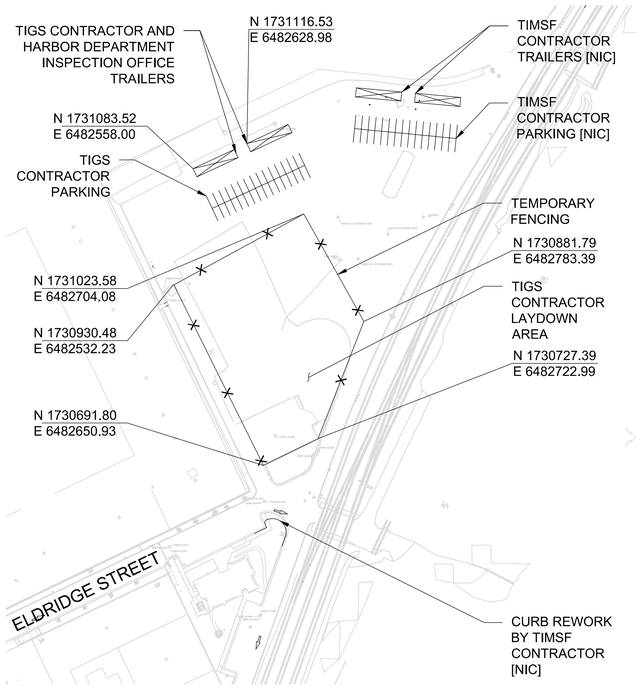

2PH-01 / PH-01 **LAYDOWN AREA**
SCALE: 1" = 100'

N

100' 0'-0" 100' 200'
SCALE: 1" = 100'

SEE DETAIL 2/PH-01 FOR CONTRACTOR TRAILER & LAYDOWN AREA.

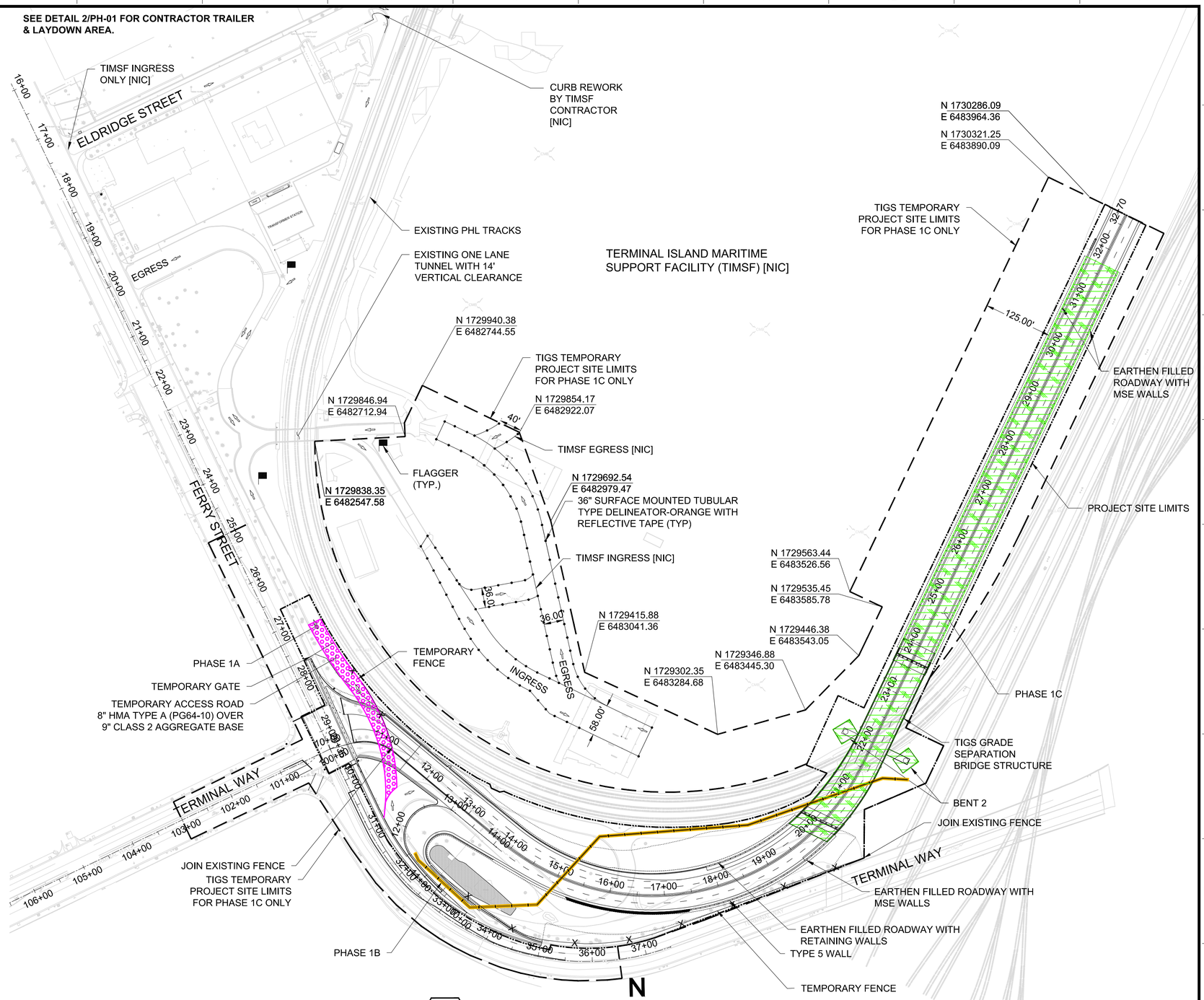

1PH-01 / PH-01 **PLAN**
SCALE: 1" = 100'

N

100' 0'-0" 100' 200'
SCALE: 1" = 100'

SHEET ____ OF 400

NO.	DATE	DRAWN	REVISIONS -	CHK'D	APP'D
			NOT FOR CONSTRUCTION		

NO.	DATE	DRAWN	REVISIONS -	CHK'D	APP'D
			80% DESIGN		

Jacobs
2600 MICHELSON DRIVE, SUITE 500
IRVINE, CA 92612
T: (949) 224-7500
F: (949) 224-7501

SCALE: 1"=100'
DRAWN: G. HUY
CHECKED: A. BENCINI
DESIGNED: D. NGUYEN
ENGINEER / ARCHITECT

TERMINAL ISLAND GRADE SEPARATION
PHASES 1A, 1B & 1C

THE PORT OF LOS ANGELES
ENGINEERING DIVISION
425 S. PALOS VERDES STREET SAN PEDRO CA 90731-3309

DRAWING NUMBER 1-3497
SHEET NUMBER PH-01

POLAPR01_042023_BWD

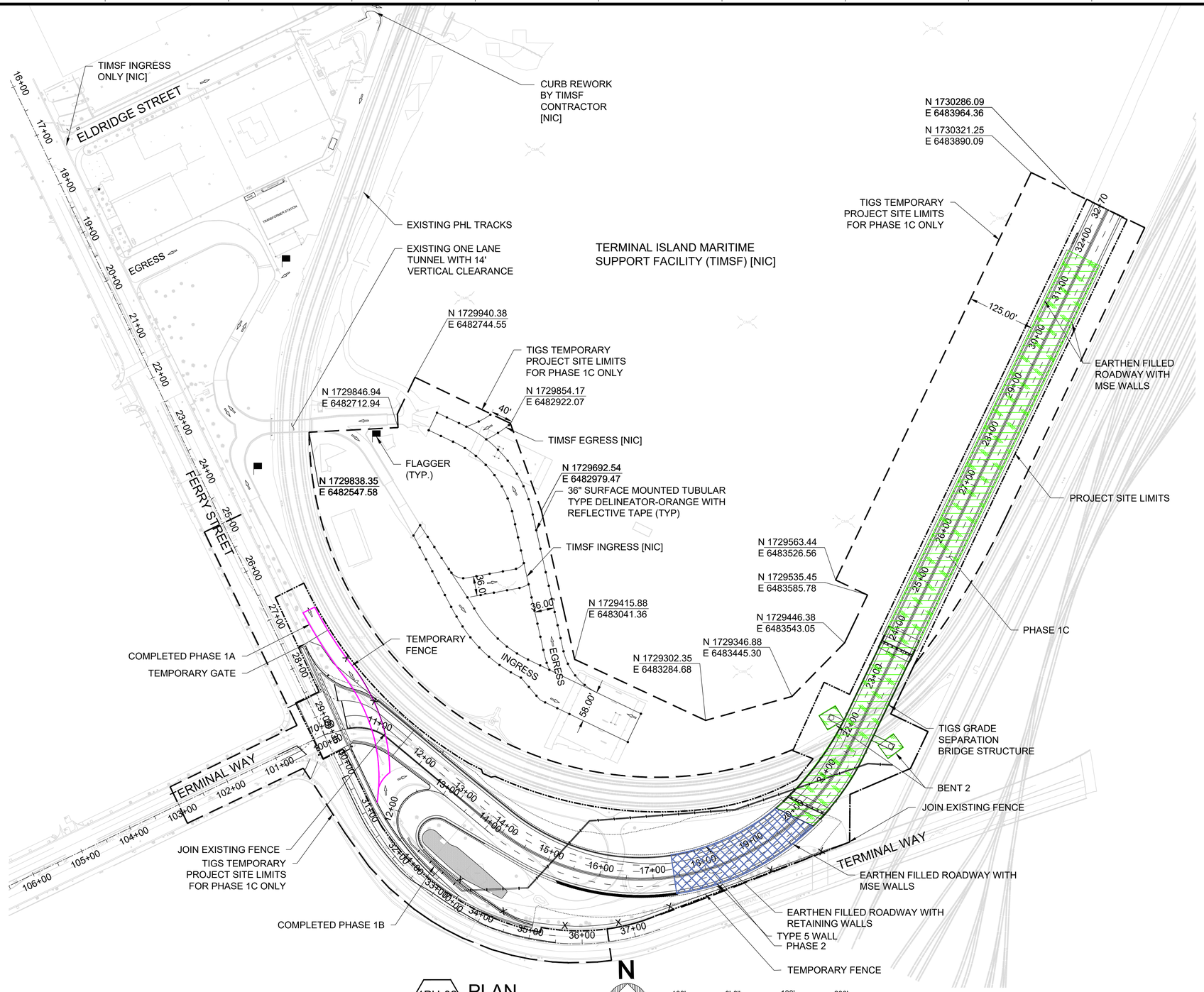

1PH-02 / PH-02 **PLAN**
SCALE: 1" = 100'

SHEET ____ OF 400

NO.	DATE	DRAWN	REVISIONS -	CHK'D	APP'D
			NOT FOR CONSTRUCTION		

NO.	DATE	DRAWN	REVISIONS -	CHK'D	APP'D
			80% DESIGN		

Jacobs
2600 MICHELSON DRIVE, SUITE 500
IRVINE, CA 92612
T: (949) 224-7500
F: (949) 224-7501

SCALE:	1"=100'
DRAWN:	G. HUY
CHECKED:	A. BENCINI
DESIGNED:	D. NGUYEN
	ENGINEER / ARCHITECT

TERMINAL ISLAND GRADE SEPARATION

PHASES 1C & 2

THE PORT OF LOS ANGELES
ENGINEERING DIVISION
425 S. PALOS VERDES STREET SAN PEDRO CA 90731-3309

DRAWING NUMBER	SHEET NUMBER
1-3497	PH-02

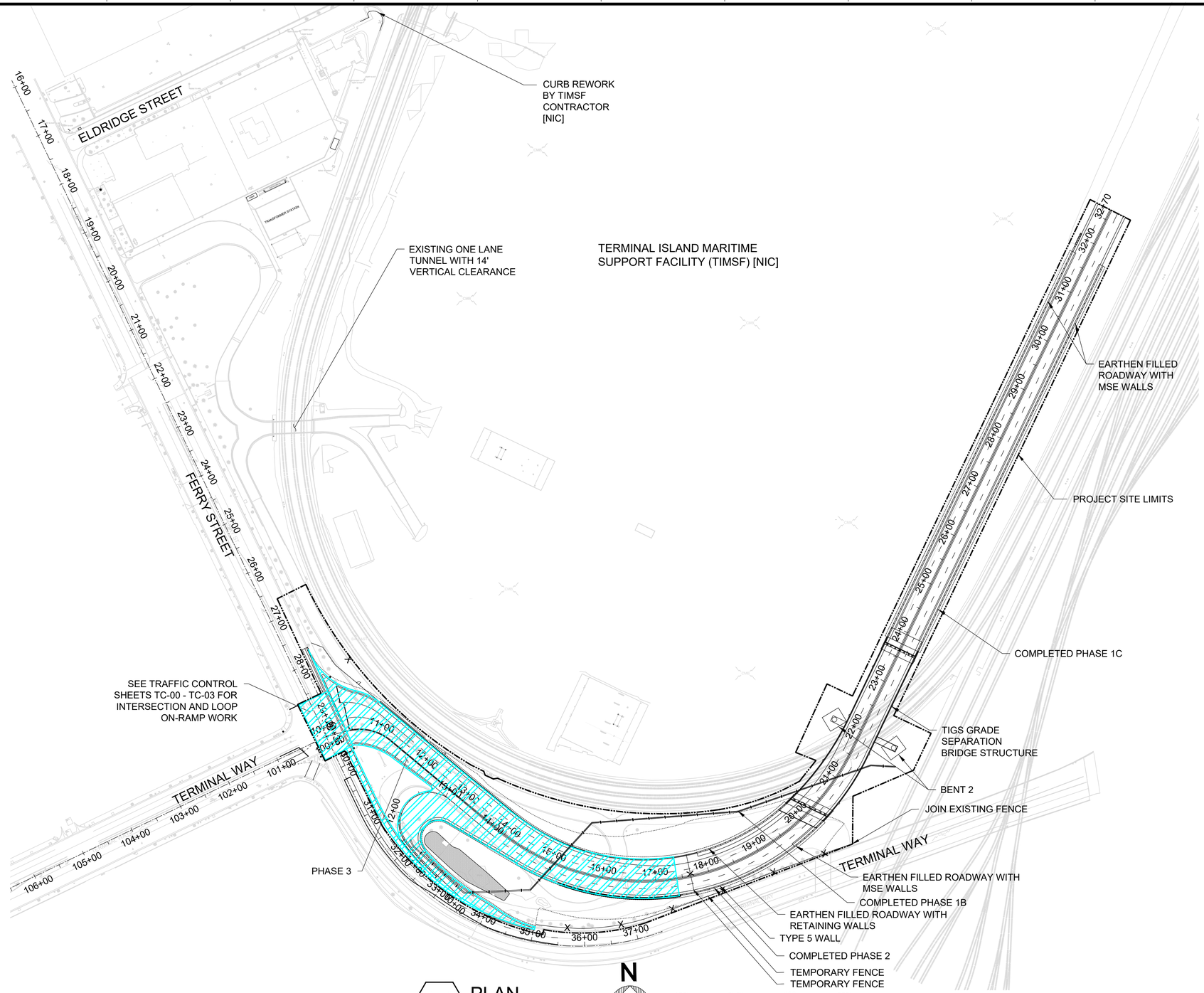

1PH-03 / PH-03 PLAN
SCALE: 1" = 100'

SHEET ____ OF 400

NO.	DATE	DRAWN	REVISIONS -	CHK'D	APP'D
			NOT FOR CONSTRUCTION		

NO.	DATE	DRAWN	REVISIONS -	CHK'D	APP'D
			80% DESIGN		

Jacobs
2600 MICHELSON DRIVE, SUITE 500
IRVINE, CA 92612
T: (949) 224-7500
F: (949) 224-7501

SCALE:	1"=100'
DRAWN:	G. HUY
CHECKED:	A. BENCINI
DESIGNED:	D. NGUYEN
	ENGINEER / ARCHITECT

TERMINAL ISLAND GRADE SEPARATION

PHASE 3

THE PORT OF LOS ANGELES
ENGINEERING DIVISION
425 S. PALOS VERDES STREET SAN PEDRO CA 90731-3309

DRAWING NUMBER: 1-3497
SHEET NUMBER: PH-03

POLAPRO1_040223_BWD

GENERAL CIVIL NOTES:

1. FOR STRIPING, SEE SP SHEETS.
2. FOR ELECTRICAL, SEE E SHEETS.
3. FOR TREE WELLS, SEE LP SHEETS.
4. FOR CATCH BASINS, SEE SD SHEETS.
5. FOR RETAINING WALLS, SEE RW SHEETS.
6. FOR ALL OTHER CIVIL NOTES, SEE SHEET GN-01.

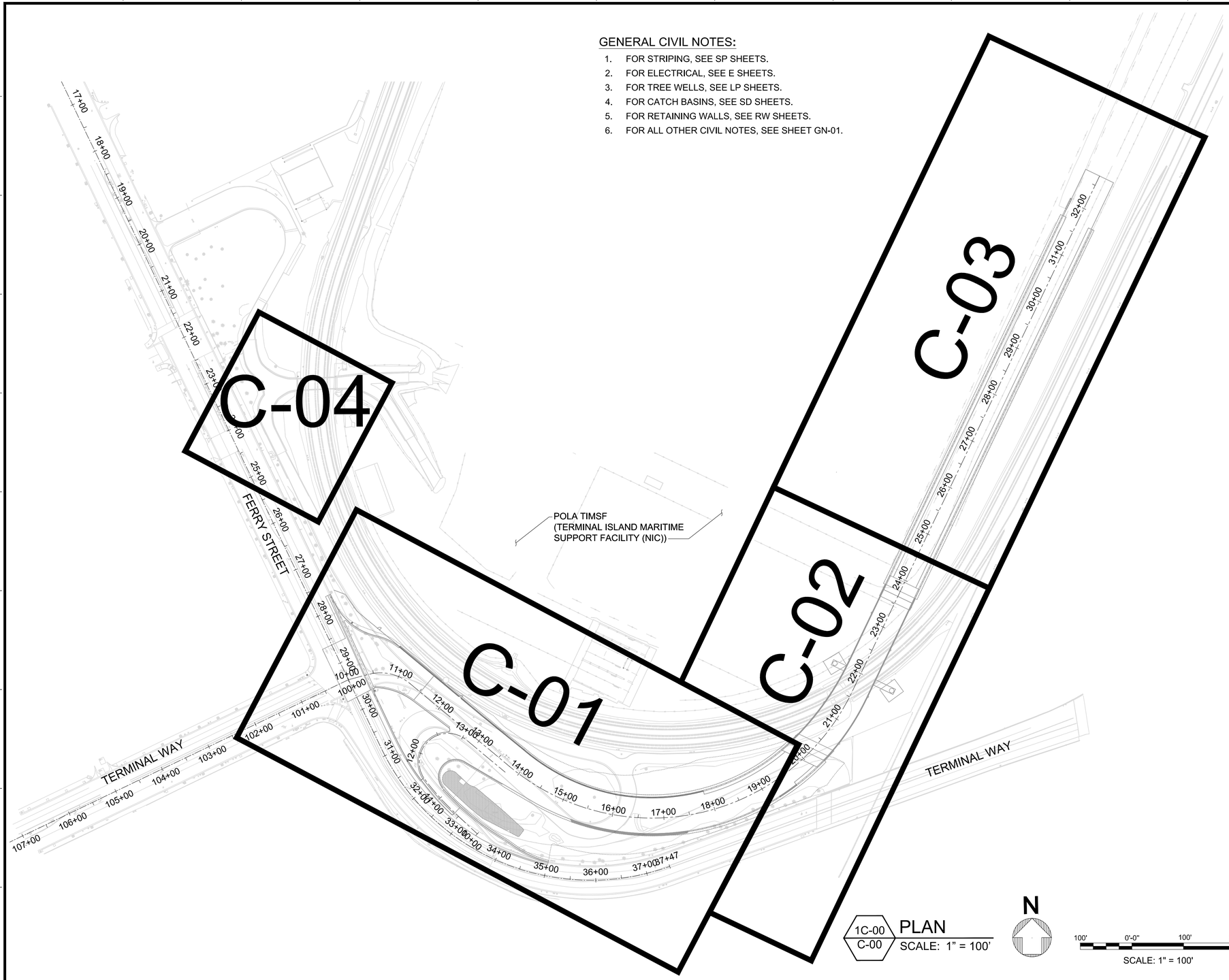

CONSTRUCTION NOTES

LEGEND OF CONSTRUCTION NOTES

COORDINATE	
CONSTRUCT	REMODEL EXISTING
EXISTING	REMOVE & CONSTRUCT
REMOVE	RELOCATE
NOT IN CONTRACT (NIC)	ABANDON

No.	CONSTRUCTION ITEM	REFERENCE DWG
2	TYPE C INTEGRAL CURB & GUTTER (a=2.0', b=0.5')	S-410-2
60	CONCRETE FLUME (d=0.5'), SEE SHEET C-05	
61	TYPE A CURB	S-410-2
63	CONCRETE CROSS GUTTER (g=6.0')	S-410-2
64	TYPE 842B CONCRETE BARRIER W' CHAIN LINK RAILING (TYPE 7)	CALTRANS B11-81, B11-82, B11-52
66	HMA DIKE (TYPE E, CASE F)	CALTRANS A87B
68	4-FT CURB CUT	
69	ALTERNATIVE CRASH CUSHION TL-3 (INCLUDES FOUNDATION)	
70	MINOR CONCRETE VEGETATION CONTROL	CALTRANS A77N5, A77N6
72	TYPE 842B CONCRETE BARRIER	CALTRANS B11-81, B11-82
76	MIDWEST GUARDRAIL SYSTEM	CALTRANS A77L1
77	MGS IN-LINE TERMINAL SYSTEM END TREATMENT	CALTRANS A77Q1
86	WARPED GUTTER AT CATCH BASIN, CASE I	LA BOE S-311-0
243	CHAIN LINK FENCING (6-FT HT, WITH BARBED WIRE POST TOP)	CALTRANS A85

ABBREVIATIONS

AC	ASPHALT CONCRETE
CF	CURB FACE
CL	CENTERLINE
EG	EXISTING GRADE
ELEV	ELEVATION
EVC	END VERTICAL CURVE
EX	EXISTING
FG	FINISHED GRADE
FT	FEET
FL	FLOW LINE
FS	FINISHED SURFACE
LT	LEFT
PVI	POINT OF VERTICAL INTERSECTION
R	RADIUS
ST	STREET
TYP	TYPICAL
VAR	VARIES
VC	VERTICAL CURVE

LEGEND

- FENCE LINE
- PROJECT SITE LIMITS
- EDGE OF PAVEMENT / SAWCUT LINE
- RETAINING WALL

1C-00 / C-00 PLAN
SCALE: 1" = 100'

N

100' 0'-0" 100' 200'
SCALE: 1" = 100'

SHEET ---- OF 400

NO.	DATE	DRAWN	REVISIONS -	CHK'D	APP'D
			NOT FOR CONSTRUCTION		

NO.	DATE	DRAWN	REVISIONS -	CHK'D	APP'D
			80% DESIGN		

Jacobs
300 N. LAKE AVENUE, SUITE 500
PASADENA, CA 91101
T: (949) 224-7502
F: (949) 224-7501

SCALE: 1"=100'
DRAWN: T. ALSAQABI
CHECKED: A. BENCINI
DESIGNED: J. HANNA
ENGINEER / ARCHITECT

TERMINAL ISLAND GRADE SEPARATION

ROADWAY PLAN - KEY MAP

THE PORT OF LOS ANGELES
ENGINEERING DIVISION
425 S. PALOS VERDES STREET SAN PEDRO CA 90731-3309

DRAWING NUMBER 1-3497
SHEET NUMBER C-00

POLAPROY_040520_BWD

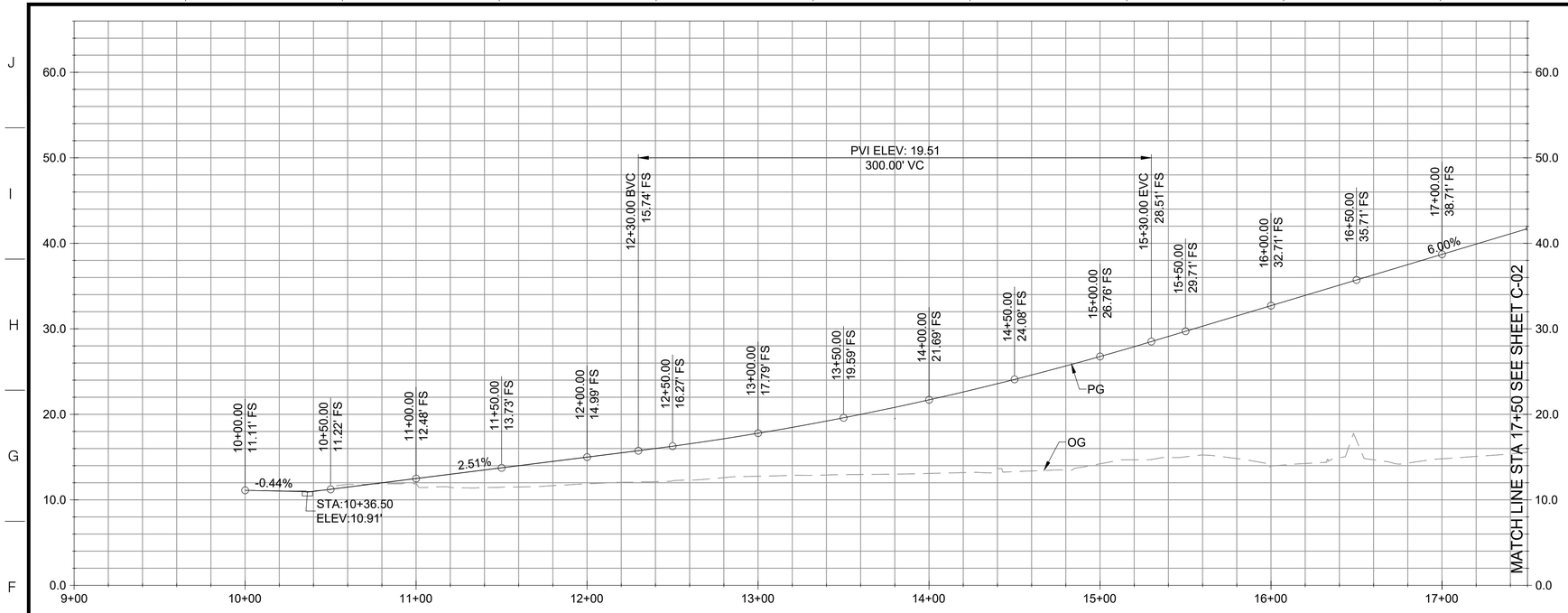

NOTES

1. FOR ROADWAY CROSS SECTIONS, REFER TO "XS" SHEETS.
2. FOR ROADWAY SUPERELEVATIONS & ETW PROFILES, REFER TO "ED" SHEETS.
3. FOR ROADWAY PAVEMENT STRUCTURES, REFER TO "GP" SHEETS.
4. SEE SHEET GN-06 FOR CENTERLINE DATA.
5. FOR DECK DRAIN AND DRAINAGE INLET DETAILS, REFER TO "SD" SHEETS.
6. SEE SHEET SD-11 FOR LOCAL DEPRESSION DETAILS.
7. FOR CATCH BASINS, REFER TO "SD" SHEETS.
8. SEE SHEETS SP-01 TO SP-03 FOR TRAFFIC CONTROL STRIPING AND "PH" SHEETS FOR PHASING.
9. SEE SHEET SP-07 FOR NEW SITE FENCING.
10. FOR CONCRETE BARRIER TYPES ALONG RETAINING WALLS, SEE "RW" SHEETS.
11. FOR INTERSECTION ELEVATIONS, SEE SHEET GP-06.

2C-01 / C-01 CENTERLINE PROFILE

CURVE DATA				
#	R	Δ	L	T
1	120.00'	52°33'56"	110.09'	59.26'
2	100.00'	27°45'08"	48.44'	24.70'
3	5.00'	118°01'31"	10.30'	8.33'
4	130.00'	34°32'23"	78.37'	40.42'
5	5.00'	142°00'39"	12.39'	14.53'
6	58.00'	125°54'17"	127.45'	113.60'
7	496.50'	9°47'08"	84.80'	42.50'
8	2.50'	180°00'00"	7.85'	---
9	501.50'	10°07'44"	88.66'	44.44'
10	501.50'	11°18'38"	99.00'	49.66'
11	478.50'	17°50'37"	149.02'	75.12'
12	200.00'	4°27'06"	15.54'	7.77'
13	200.00'	21°50'16"	76.23'	38.58'

CONSTRUCTION NOTES

LEGEND OF CONSTRUCTION NOTES

COORDINATE
CONSTRUCT
EXISTING
REMOVE
NOT IN CONTRACT (NIC)
REMODEL EXISTING
REMOVE & CONSTRUCT
RELOCATE
ABANDON

No.	CONSTRUCTION ITEM	REFERENCE DWG
2	TYPE C INTEGRAL CURB & GUTTER (a=2.0', b=0.5')	S-410-2
60	CONCRETE FLUME (d=0.5'), SEE SHEET C-05	
61	TYPE A CURB	S-410-2
63	CONCRETE CROSS GUTTER (g=6.0')	S-410-2
64	TYPE 842B CONCRETE BARRIER W' CHAIN LINK RAILING (TYPE 7)	CALTRANS B11-81, B11-82, B11-52
66	HMA DIKE (TYPE E, CASE F)	CALTRANS A87B
68	4-FT CURB CUT	
69	ALTERNATIVE CRASH CUSHION TL-3 (INCLUDES FOUNDATION)	
70	MINOR CONCRETE VEGETATION CONTROL	CALTRANS A77N5, A77N6
72	TYPE 842B CONCRETE BARRIER	CALTRANS B11-81, B11-82
76	MIDWEST GUARDRAIL SYSTEM	CALTRANS A77L1
77	MGS IN-LINE TERMINAL SYSTEM END TREATMENT	CALTRANS A77Q1
86	WARPED GUTTER AT CATCH BASIN, CASE I	LA BOE S-311-0
243	CHAIN LINK FENCING (6-FT HT, WITH BARBED WIRE POST TOP)	CALTRANS A85

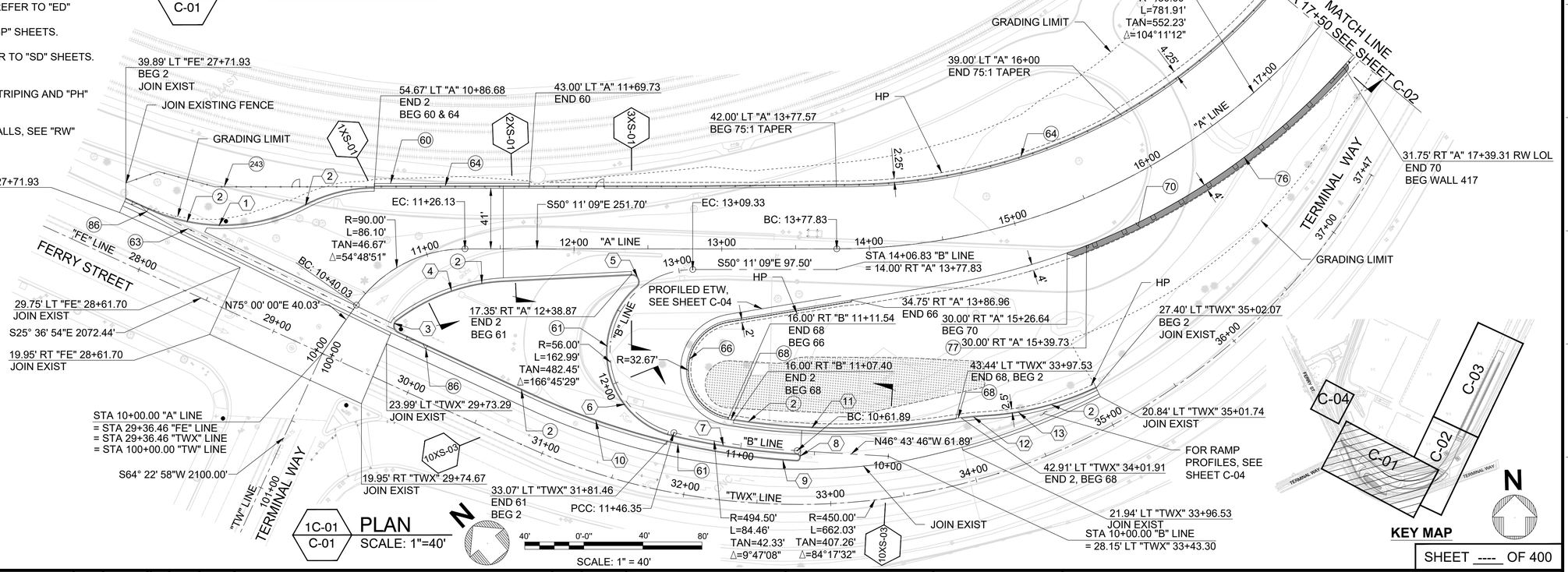

1C-01 / C-01 PLAN
SCALE: 1"=40'

SCALE: 1" = 40'

SHEET ____ OF 400

NO.	DATE	DRAWN	REVISIONS -	CHK'D	APP'D
			NOT FOR CONSTRUCTION		

NO.	DATE	DRAWN	REVISIONS -	CHK'D	APP'D
			80% DESIGN		

Jacobs
2600 MICHELSON DRIVE, SUITE 500
IRVINE, CA 92612
T: (949) 224-7500
F: (949) 224-7501

SCALE: 1"=40'
DRAWN: T. ALSAQABI
CHECKED: A. BENCINI
DESIGNED: J. HANNA
ENGINEER / ARCHITECT

TERMINAL ISLAND GRADE SEPARATION

ROADWAY PLAN & PROFILE - 1

THE PORT OF LOS ANGELES
ENGINEERING DIVISION
425 S. PALOS VERDES STREET SAN PEDRO CA 90731-3309

DRAWING NUMBER 1-3497
SHEET NUMBER C-01

POLAPROT_040223_BWD

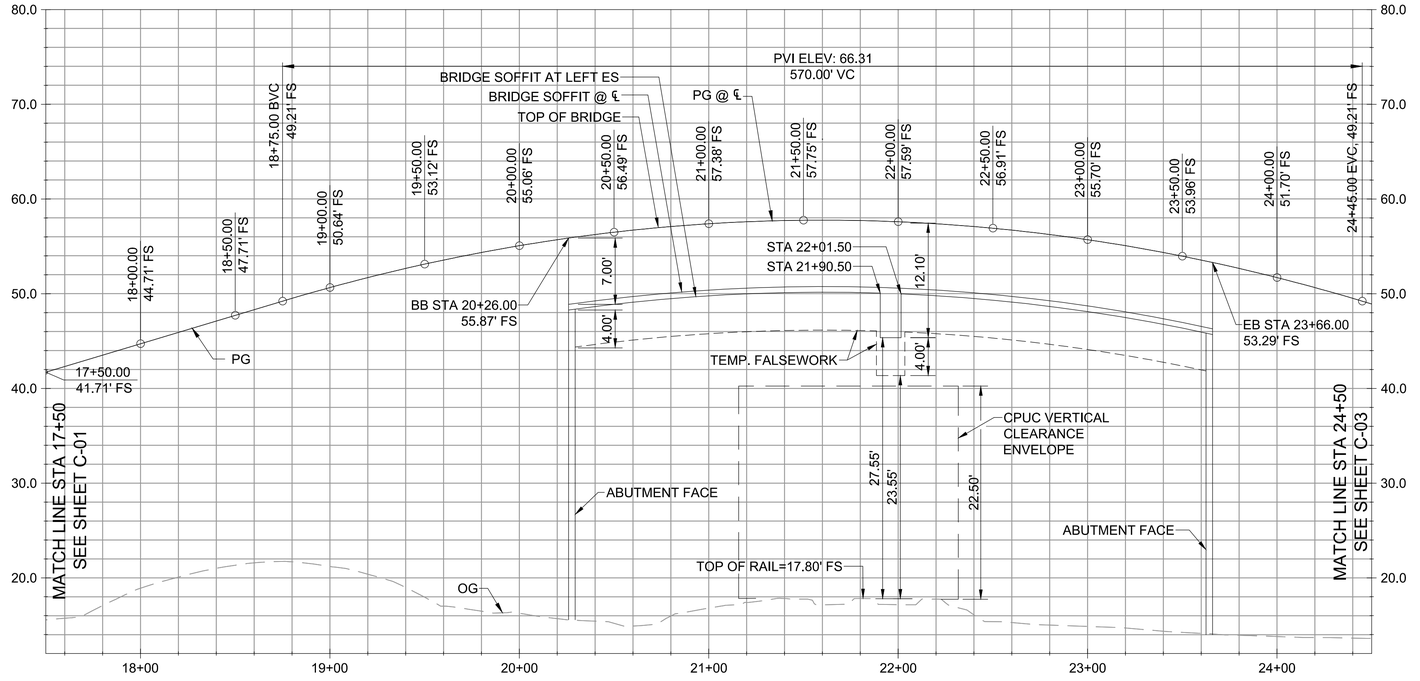

2C-02 / C-02 CENTERLINE PROFILE

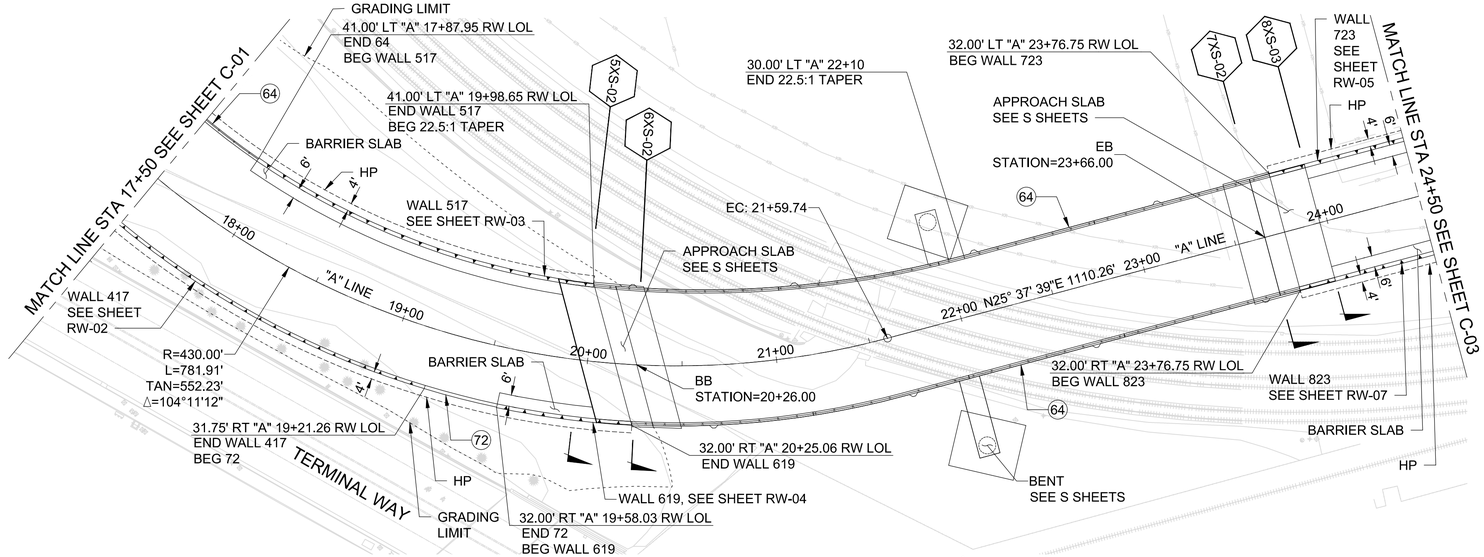

1C-02 / C-02 PLAN

SCALE: 1"=40'

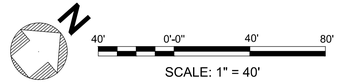

SCALE: 1" = 40'

CONSTRUCTION NOTES

LEGEND OF CONSTRUCTION NOTES

- COORDINATE
- CONSTRUCT
- EXISTING
- REMOVE
- NOT IN CONTRACT (NIC)
- REMODEL EXISTING
- REMOVE & CONSTRUCT
- RELOCATE
- ABANDON

No.	CONSTRUCTION ITEM	REFERENCE DWG
2	TYPE C INTEGRAL CURB & GUTTER (a=2.0', b=0.5')	S-410-2
60	CONCRETE FLUME (d=0.5'), SEE SHEET C-05	
61	TYPE A CURB	S-410-2
63	CONCRETE CROSS GUTTER (g=6.0')	S-410-2
64	TYPE 842B CONCRETE BARRIER W' CHAIN LINK RAILING (TYPE 7)	CALTRANS B11-81, B11-82, B11-52
66	HMA DIKE (TYPE E, CASE F)	CALTRANS A87B
68	4-FT CURB CUT	
69	ALTERNATIVE CRASH CUSHION TL-3 (INCLUDES FOUNDATION)	
70	MINOR CONCRETE VEGETATION CONTROL	CALTRANS A77N5, A77N6
72	TYPE 842B CONCRETE BARRIER	CALTRANS B11-81, B11-82
76	MIDWEST GUARDRAIL SYSTEM	CALTRANS A77L1
77	MGS IN-LINE TERMINAL SYSTEM END TREATMENT	CALTRANS A77Q1
86	WARPED GUTTER AT CATCH BASIN, CASE I	LA BOE S-311-0
243	CHAIN LINK FENCING (6-FT HT, WITH BARBED WIRE POST TOP)	CALTRANS A85

NOTES

1. FOR ROADWAY CROSS SECTIONS, REFER TO "XS" SHEETS.
2. FOR ROADWAY SUPERELEVATIONS & ETW PROFILES, REFER TO "ED" SHEETS.
3. FOR ROADWAY PAVEMENT STRUCTURES, REFER TO "GP" SHEETS.
4. SEE SHEET GN-06 FOR CENTERLINE DATA.
5. FOR DECK DRAIN AND DRAINAGE INLET DETAILS, REFER TO "SD" SHEETS.
6. SEE SHEET SD-11 FOR LOCAL DEPRESSION DETAILS.
7. FOR CATCH BASINS, REFER TO "SD" SHEETS.
8. SEE SHEETS SP-01 TO SP-03 FOR TRAFFIC CONTROL STRIPING AND "PH" SHEETS FOR PHASING.
9. SEE SHEET SP-07 FOR NEW SITE FENCING.
10. FOR CONCRETE BARRIER TYPES ALONG RETAINING WALLS, SEE "RW" SHEETS.
11. FOR INTERSECTION ELEVATIONS, SEE SHEET GP-06.

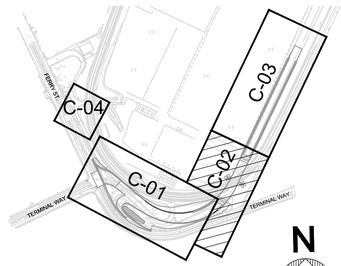

KEY MAP

SHEET ---- OF 400

NO.	DATE	DRAWN	REVISIONS -	CHK'D	APP'D
			NOT FOR CONSTRUCTION		

NO.	DATE	DRAWN	REVISIONS -	CHK'D	APP'D
			80% DESIGN		

Jacobs
2600 MICHELSON DRIVE, SUITE 500
IRVINE, CA 92612
P: (949) 224-7500
F: (949) 224-7501

SCALE:	1"=40'
DRAWN:	T. ALSAQABI
CHECKED:	A. BENCINI
DESIGNED:	J. HANNA
	ENGINEER / ARCHITECT

TERMINAL ISLAND GRADE SEPARATION

ROADWAY PLAN & PROFILE - 2

THE PORT OF LOS ANGELES
ENGINEERING DIVISION
425 S. PALOS VERDES STREET SAN PEDRO CA 90731-3309

DRAWING NUMBER	SHEET NUMBER
1-3497	C-02

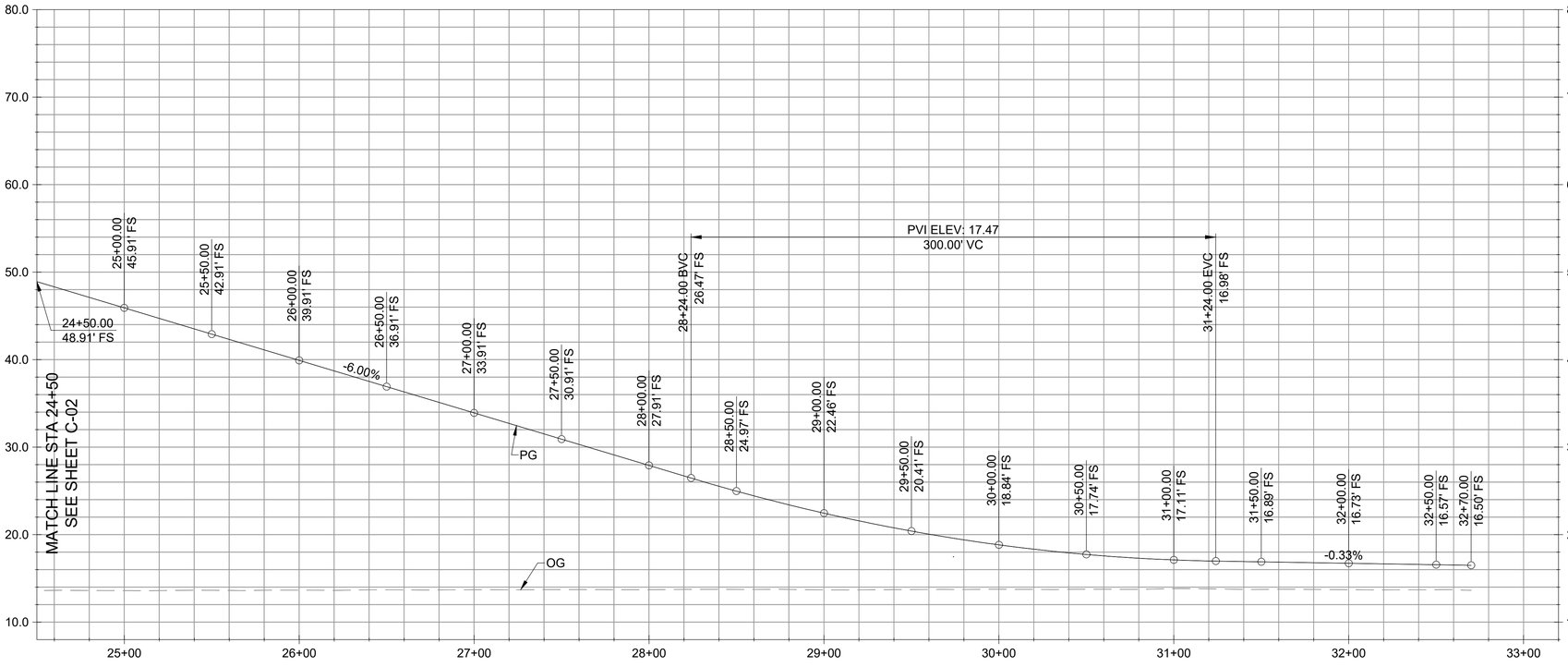

2C-03 / C-03 CENTERLINE PROFILE

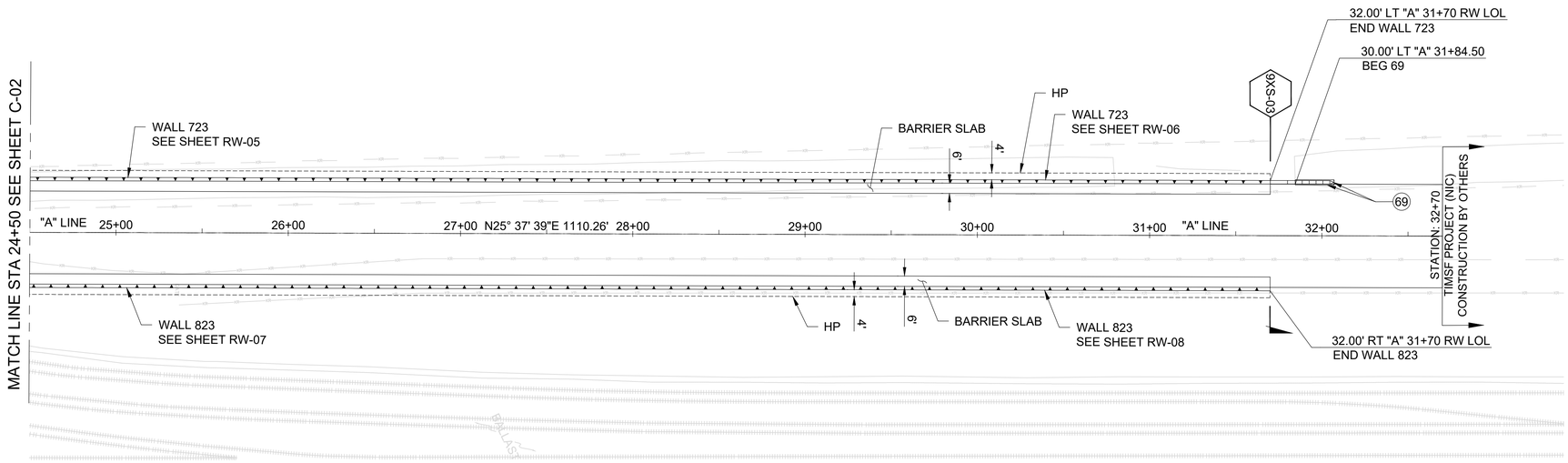

1C-03 / C-03 PLAN
SCALE: 1"=40'

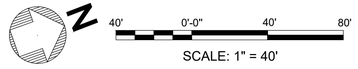

CONSTRUCTION NOTES

LEGEND OF CONSTRUCTION NOTES

COORDINATE
CONSTRUCT
EXISTING
REMOVE
NOT IN CONTRACT (NIC)
REMODEL EXISTING
REMOVE & CONSTRUCT
RELOCATE
ABANDON

No.	CONSTRUCTION ITEM	REFERENCE DWG
2	TYPE C INTEGRAL CURB & GUTTER (a=2.0', b=0.5')	S-410-2
60	CONCRETE FLUME (d=0.5'), SEE SHEET C-05	
61	TYPE A CURB	S-410-2
63	CONCRETE CROSS GUTTER (g=6.0')	S-410-2
64	TYPE 842B CONCRETE BARRIER W' CHAIN LINK RAILING (TYPE 7)	CALTRANS B11-81, B11-82, B11-52
66	HMA DIKE (TYPE E, CASE F)	CALTRANS A87B
68	4-FT CURB CUT	
69	ALTERNATIVE CRASH CUSHION TL-3 (INCLUDES FOUNDATION)	
70	MINOR CONCRETE VEGETATION CONTROL	CALTRANS A77N5, A77N6
72	TYPE 842B CONCRETE BARRIER	CALTRANS B11-81, B11-82
76	MIDWEST GUARDRAIL SYSTEM	CALTRANS A77L1
77	MGS IN-LINE TERMINAL SYSTEM END TREATMENT	CALTRANS A77Q1
86	WARPED GUTTER AT CATCH BASIN, CASE I	LA BOE S-311-0
243	CHAIN LINK FENCING (6-FT HT, WITH BARBED WIRE POST TOP)	CALTRANS A85

NOTES

1. FOR ROADWAY CROSS SECTIONS, REFER TO "XS" SHEETS.
2. FOR ROADWAY SUPERELEVATIONS & ETW PROFILES, REFER TO "ED" SHEETS.
3. FOR ROADWAY PAVEMENT STRUCTURES, REFER TO "GP" SHEETS.
4. SEE SHEET GN-06 FOR CENTERLINE DATA.
5. FOR DECK DRAIN AND DRAINAGE INLET DETAILS, REFER TO "SD" SHEETS.
6. SEE SHEET SD-11 FOR LOCAL DEPRESSION DETAILS.
7. FOR CATCH BASINS, REFER TO "SD" SHEETS.
8. SEE SHEETS SP-01 TO SP-03 FOR TRAFFIC CONTROL STRIPING AND "PH" SHEETS FOR PHASING.
9. SEE SHEET SP-07 FOR NEW SITE FENCING.
10. FOR CONCRETE BARRIER TYPES ALONG RETAINING WALLS, SEE "RW" SHEETS.
11. FOR INTERSECTION ELEVATIONS, SEE SHEET GP-06.

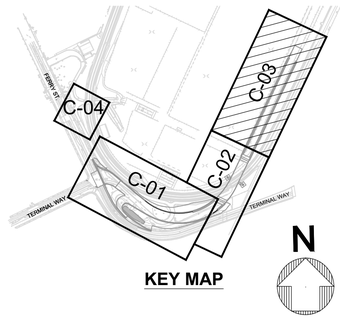

KEY MAP

SHEET ____ OF 400

NO.	DATE	DRAWN	REVISIONS -	CHK'D	APP'D
			NOT FOR CONSTRUCTION		

NO.	DATE	DRAWN	REVISIONS -	CHK'D	APP'D
			80% DESIGN		

Jacobs
1301 DOVE STREET, SUITE 500
IRVINE, CA 92614
T: (949) 224-7500
F: (949) 224-7501

SCALE: 1"=40'
DRAWN: T. ALSAQABI
CHECKED: A. BENCINI
DESIGNED: J. HANNA
ENGINEER / ARCHITECT

TERMINAL ISLAND GRADE SEPARATION

ROADWAY PLAN & PROFILE - 3

THE PORT OF LOS ANGELES
ENGINEERING DIVISION
425 S. PALOS VERDES STREET SAN PEDRO CA 90731-3309

DRAWING NUMBER 1-3497
SHEET NUMBER C-03

POLAPROT_040223_BWD

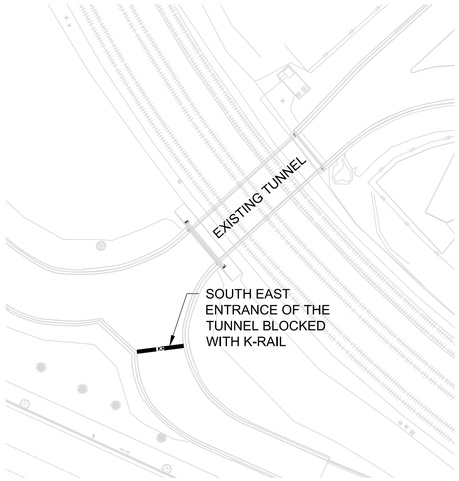

1C-04 / C-04 PLAN
SCALE: 1"=40'

N

40' 0'-0" 40' 80'
SCALE: 1" = 40'

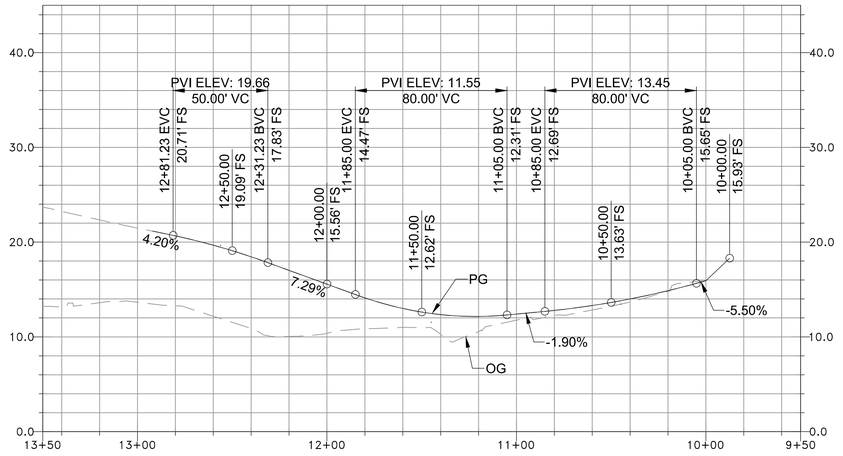

2C-04 / C-01 "B" LINE RIGHT ETW PROFILE

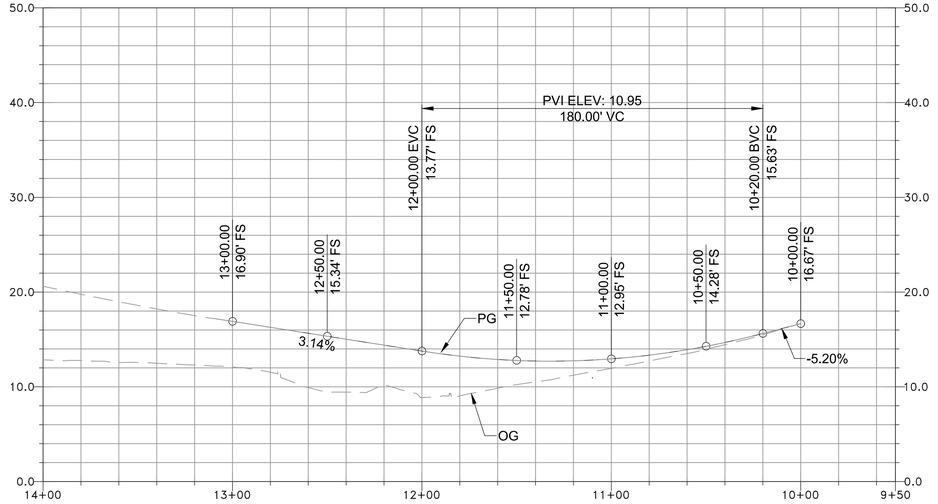

3C-04 / C-01 "B" LINE PROFILE

NOTES

1. FOR ROADWAY CROSS SECTIONS, REFER TO "XS" SHEETS.
2. FOR ROADWAY SUPERELEVATIONS & ETW PROFILES, REFER TO "ED" SHEETS.
3. FOR ROADWAY PAVEMENT STRUCTURES, REFER TO "GP" SHEETS.
4. SEE SHEET GN-06 FOR CENTERLINE DATA.
5. FOR DECK DRAIN AND DRAINAGE INLET DETAILS, REFER TO "SD" SHEETS.
6. SEE SHEET SD-11 FOR LOCAL DEPRESSION DETAILS.
7. FOR CATCH BASINS, REFER TO "SD" SHEETS.
8. SEE SHEETS SP-01 TO SP-03 FOR TRAFFIC CONTROL STRIPING AND "PH" SHEETS FOR PHASING.
9. SEE SHEET SP-07 FOR NEW SITE FENCING.
10. FOR CONCRETE BARRIER TYPES ALONG RETAINING WALLS, SEE "RW" SHEETS.
11. FOR INTERSECTION ELEVATIONS, SEE SHEET GP-06.

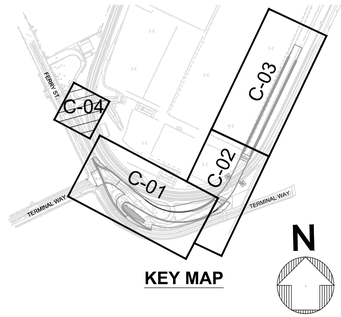

KEY MAP

SHEET ____ OF 400

NO.	DATE	DRAWN	REVISIONS -	CHK'D	APP'D
			NOT FOR CONSTRUCTION		

NO.	DATE	DRAWN	REVISIONS -	CHK'D	APP'D
			80% DESIGN		

Jacobs
2600 MICHELSON DRIVE, SUITE 500
IRVINE, CA 92612
T: (949) 224-7500
F: (949) 224-7501

SCALE: 1"=40'
DRAWN: T. ALSAQABI
CHECKED: A. BENCINI
DESIGNED: J. HANNA
ENGINEER / ARCHITECT

TERMINAL ISLAND GRADE SEPARATION

ROADWAY PLAN & PROFILE - 4

THE PORT OF LOS ANGELES
ENGINEERING DIVISION
425 S. PALOS VERDES STREET SAN PEDRO CA 90731-3309

DRAWING NUMBER: 1-3497
SHEET NUMBER: C-04

POLAPRO1_04/2023_BWD

NOTES:

1. UNLESS OTHERWISE NOTED, DETAILS ARE ASSUMED NOT TO SCALE.
2. SEE SHEETS C-01 THROUGH C-03 FOR CONSTRUCTION NOTE LOCATIONS.
3. SEE SHEETS XS-01 THROUGH XS-03 FOR APPLICABLE CROSS SECTIONS.

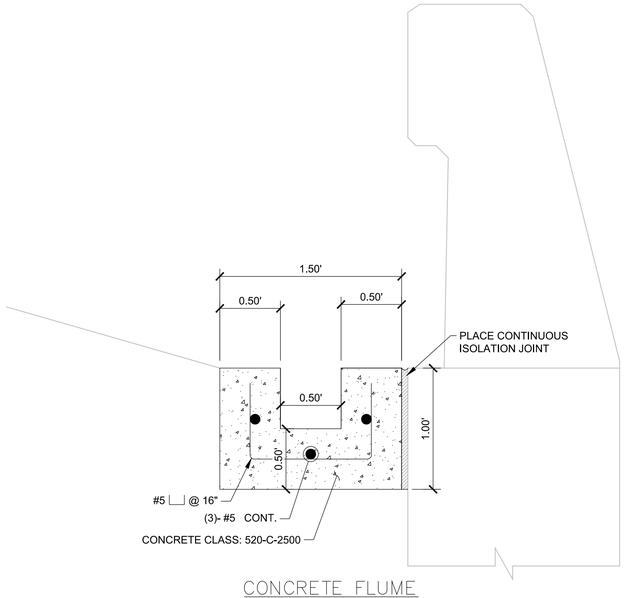

CONCRETE FLUME

SHEET ____ OF 400

NO.	DATE	DRAWN	REVISIONS -	CHK'D	APP'D
			NOT FOR CONSTRUCTION		

NO.	DATE	DRAWN	REVISIONS -	CHK'D	APP'D
			80% DESIGN		

Jacobs
2600 MICHELSON DRIVE, SUITE 500
IRVINE, CA 92612
T: (949) 224-7500
F: (949) 224-7501

SCALE: NTS
DRAWN: T. PALUSZKIEWICZ
CHECKED: A. BENCINI
DESIGNED: J. HANNA
ENGINEER / ARCHITECT

TERMINAL ISLAND GRADE SEPARATION

CONSTRUCTION DETAILS - 1

THE PORT OF LOS ANGELES
ENGINEERING DIVISION
425 S. PALOS VERDES STREET SAN PEDRO CA 90731-3309

DRAWING NUMBER: 1-3497
SHEET NUMBER: C-05

POLAFRD1_04/2023_BWD

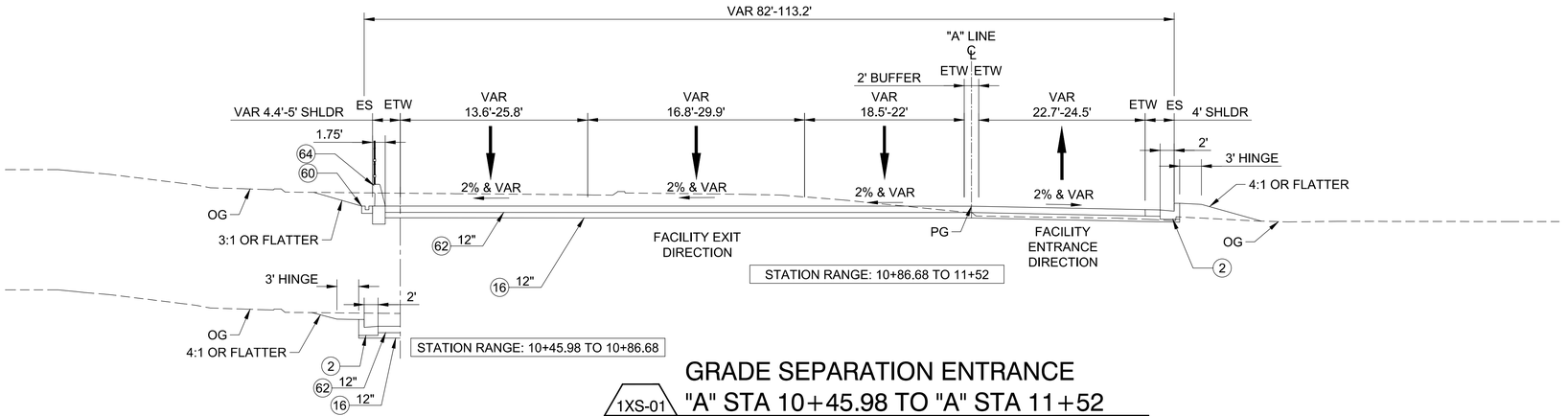

GRADE SEPARATION ENTRANCE
"A" STA 10+45.98 TO "A" STA 11+52

1XS-01 / 1C-01

SCALE: NTS

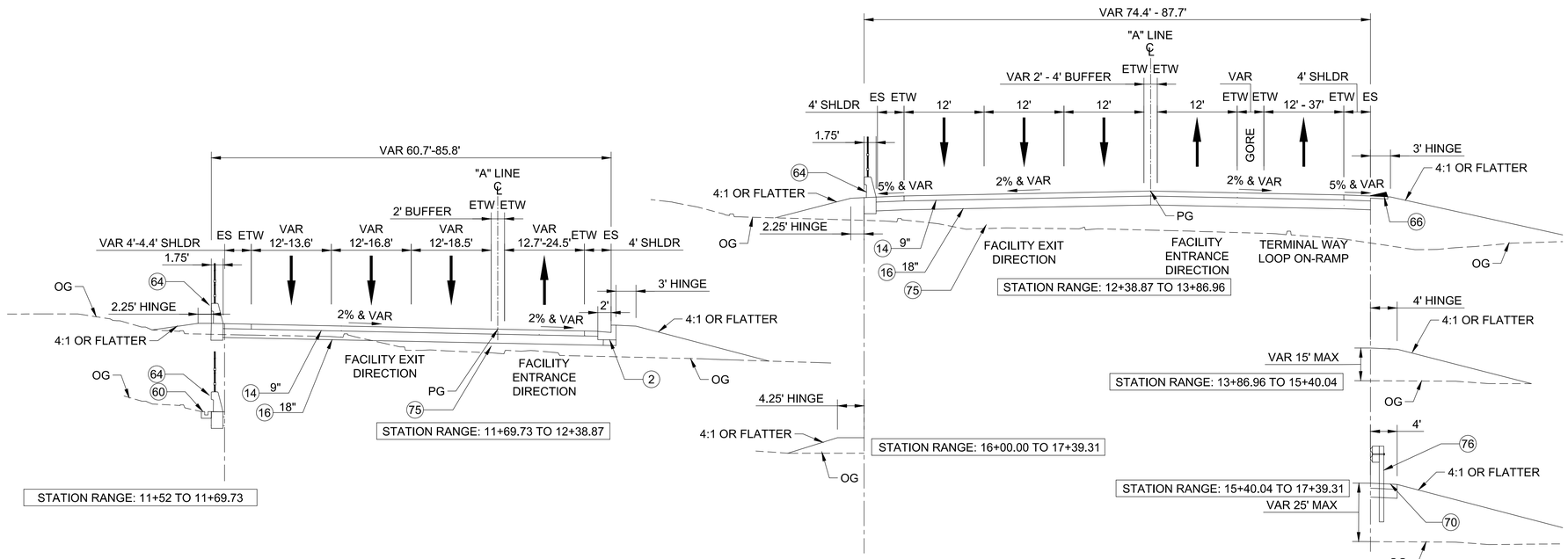

GRADE SEPARATION ENTRANCE
"A" STA 11+52 TO "A" STA 12+38.87

2XS-01 / 1C-01

SCALE: NTS

GRADE SEPARATION ENTRANCE
"A" STA 12+38.87 TO "A" STA 17+39.31

3XS-01 / 1C-01

SCALE: NTS

CONSTRUCTION NOTES

LEGEND OF CONSTRUCTION NOTES

COORDINATE
CONSTRUCT
EXISTING
REMOVE
NOT IN CONTRACT (NIC)
REMODEL EXISTING
REMOVE & CONSTRUCT
RELOCATE
ABANDON

No.	CONSTRUCTION ITEM	REFERENCE DWG
2	TYPE C INTEGRAL CURB & GUTTER (a=2.0', b=0.5')	S-410-2
14	ASPHALT CONCRETE PAVEMENT (C2-PG 70-10)	
16	CRUSHED MISC BASE (CMB)	
60	CONCRETE FLUME (d=0.5'), SEE SHEET C-05	
61	TYPE A CURB	S-410-2
62	FIBER REINFORCED JOINTED PLAIN CONCRETE PAVEMENT	CALTRANS P1
64	TYPE 842B CONCRETE BARRIER W' CHAIN LINK RAILING (TYPE 7)	CALTRANS B11-81, B11-82, B11-52
66	HMA DIKE (TYPE E, CASE F)	CALTRANS A87B
70	MINOR CONCRETE VEGETATION CONTROL	CALTRANS A77N5, A77N6
72	TYPE 842B CONCRETE BARRIER	CALTRANS B11-81, B11-82
75	IMPORT FILL (R-VALUE = 20 MIN)	
76	MIDWEST GUARDRAIL SYSTEM	CALTRANS A77L1

NOTES

1. UP ARROWS INDICATE NORTHBOUND DIRECTION AND DOWN ARROWS INDICATE SOUTHBOUND DIRECTION.

SHEET ____ OF 400

NO.	DATE	DRAWN	REVISIONS -	CHK'D	APP'D
			NOT FOR CONSTRUCTION		

NO.	DATE	DRAWN	REVISIONS -	CHK'D	APP'D
			80% DESIGN		

Jacobs
2600 MICHELSON DRIVE, SUITE 500
IRVINE, CA 92612
T: (949) 224-7500
F: (949) 224-7501

SCALE: NTS
DRAWN: T. ALSAQABI
CHECKED: A. BENCINI
DESIGNED: J. HANNA
ENGINEER / ARCHITECT

TERMINAL ISLAND GRADE SEPARATION

ROADWAY TYPICAL SECTIONS - 1

THE PORT OF LOS ANGELES
ENGINEERING DIVISION
425 S. PALOS VERDES STREET SAN PEDRO CA 90731-3309

DRAWING NUMBER: 1-3497
SHEET NUMBER: XS-01

POLAPR21_042023_BWD

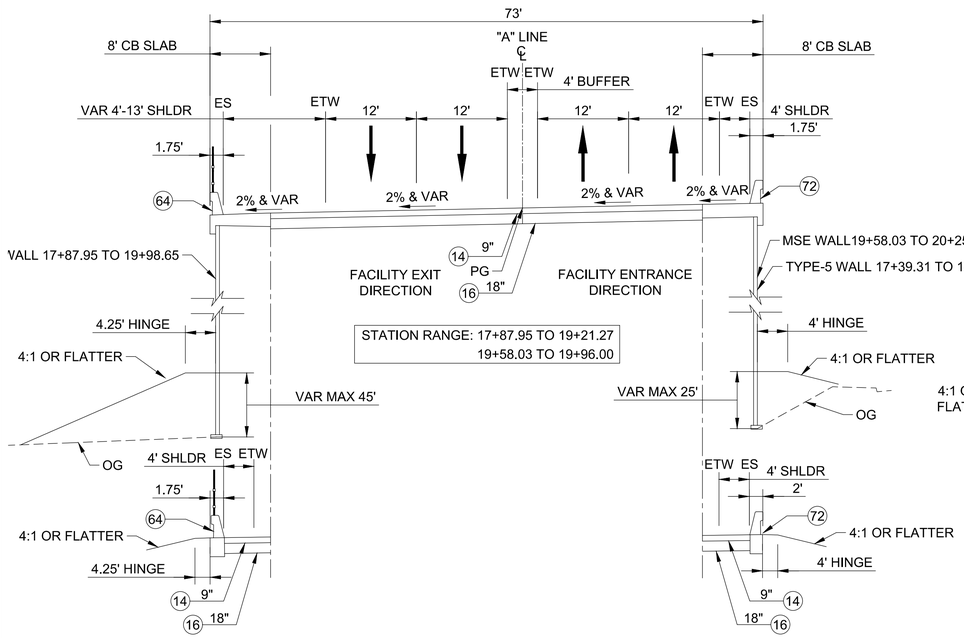

STATION RANGE: 17+39.31 TO 17+87.95

STATION RANGE: 19+21.27 TO 19+58.03

GRADE SEPARATION MSE WALLS 417, 517 & 619

4XS-02 / 1C-01, 1C-02 "A" STA 17+39.31 TO "A" STA 19+96.00

SCALE: NTS

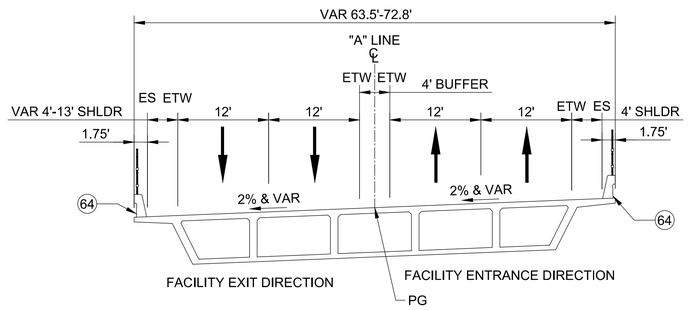

BRIDGE

"A" STA 20+26.00 TO "A" STA 23+66.00 ONLY

(SEE STRUCTURAL PLANS FOR BRIDGE SECTIONS)

6XS-02 / 1C-02 SCALE: NTS

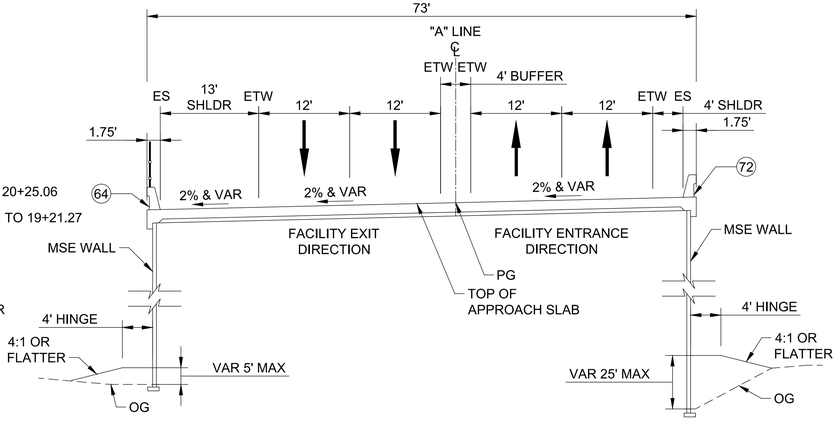

APPROACH SLAB

"A" STA 19+96.00 TO "A" STA 20+26.00 ONLY

(SEE STRUCTURAL PLANS FOR BRIDGE SECTIONS)

5XS-02 / 1C-02 SCALE: NTS

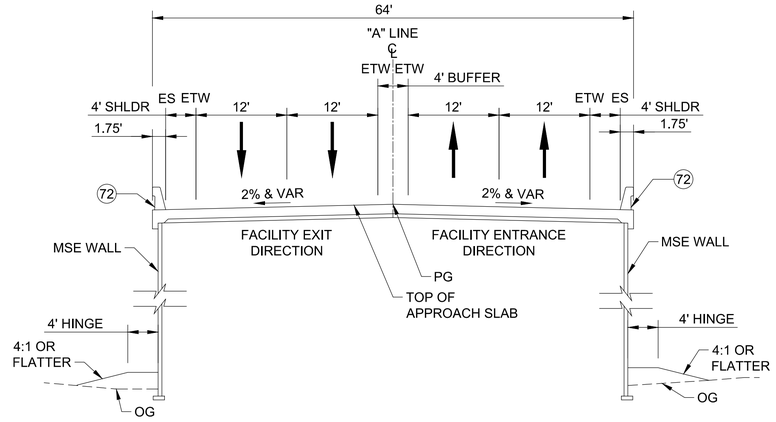

APPROACH SLAB

"A" STA 23+66.00 TO "A" STA 23+96.00 ONLY

(SEE STRUCTURAL PLANS FOR BRIDGE SECTIONS)

7XS-02 / 1C-02 SCALE: NTS

CONSTRUCTION NOTES

LEGEND OF CONSTRUCTION NOTES

COORDINATE
CONSTRUCT
EXISTING
REMOVE
NOT IN CONTRACT (NIC)
REMODEL EXISTING
REMOVE & CONSTRUCT
RELOCATE
ABANDON

No.	CONSTRUCTION ITEM	REFERENCE DWG
2	TYPE C INTEGRAL CURB & GUTTER (a=2.0', b=0.5')	S-410-2
14	ASPHALT CONCRETE PAVEMENT (C2-PG 70-10)	
16	CRUSHED MISC BASE (CMB)	
60	CONCRETE FLUME (d=0.5'), SEE SHEET C-05	
61	TYPE A CURB	S-410-2
62	FIBER REINFORCED JOINTED PLAIN CONCRETE PAVEMENT	CALTRANS P1
64	TYPE 842B CONCRETE BARRIER W' CHAIN LINK RAILING (TYPE 7)	CALTRANS B11-81, B11-82, B11-52
66	HMA DIKE (TYPE E, CASE F)	CALTRANS A87B
70	MINOR CONCRETE VEGETATION CONTROL	CALTRANS A77N5, A77N6
72	TYPE 842B CONCRETE BARRIER	CALTRANS B11-81, B11-82
75	IMPORT FILL (R-VALUE = 20 MIN)	
76	MIDWEST GUARDRAIL SYSTEM	CALTRANS A77L1

NOTES

1. UP ARROWS INDICATE NORTHBOUND DIRECTION AND DOWN ARROWS INDICATE SOUTHBOUND DIRECTION.

SHEET ____ OF 400

NO.	DATE	DRAWN	REVISIONS -	CHK'D	APP'D
			NOT FOR CONSTRUCTION		

NO.	DATE	DRAWN	REVISIONS -	CHK'D	APP'D
			80% DESIGN		

Jacobs
2600 MICHELSON DRIVE, SUITE 500
IRVINE, CA 92612
T: (949) 224-7500
F: (949) 224-7501

SCALE: NTS
DRAWN: T. ALSAQABI
CHECKED: A. BENCINI
DESIGNED: J. HANNA
ENGINEER / ARCHITECT

TERMINAL ISLAND GRADE SEPARATION

ROADWAY TYPICAL SECTIONS - 2

THE PORT OF LOS ANGELES
ENGINEERING DIVISION
425 S. PALOS VERDES STREET SAN PEDRO CA 90731-3309

DRAWING NUMBER 1-3497

SHEET NUMBER XS-02

POLAPRO1_04/2023_BWD

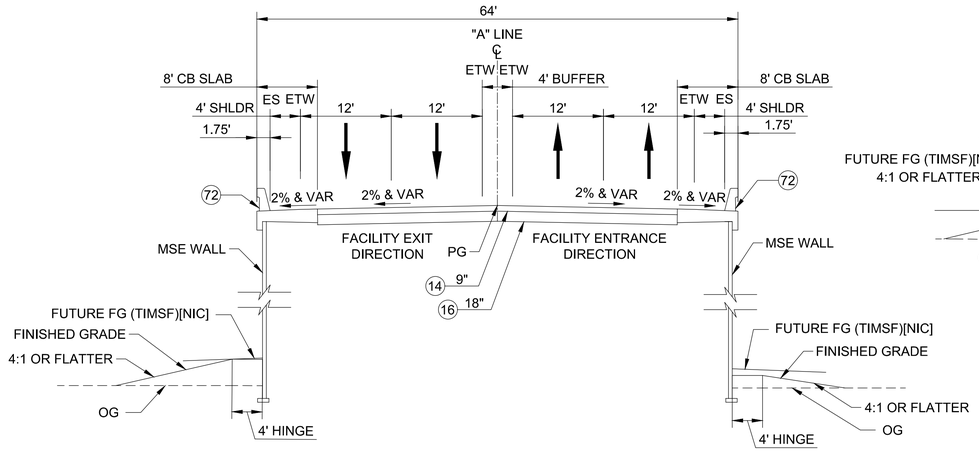

GRADE SEPARATION MSE WALLS 723 & 823

8XS-03 / 1C-02, 1C-03 "A" STA 23+96.00 TO "A" STA 31+70.00

SCALE: NTS

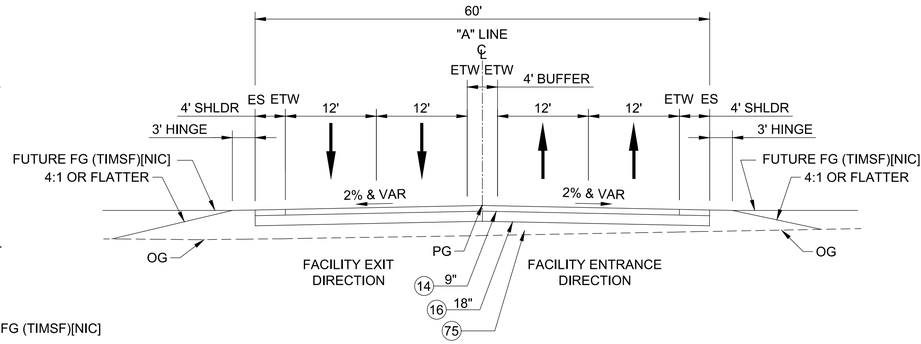

GRADE SEPARATION

9XS-03 / 1C-03 "A" STA 31+70.00 TO "A" STA 32+70.00

SCALE: NTS

CONSTRUCTION NOTES

LEGEND OF CONSTRUCTION NOTES

COORDINATE	
CONSTRUCT	REMODEL EXISTING
EXISTING	REMOVE & CONSTRUCT
REMOVE	RELOCATE
NOT IN CONTRACT (NIC)	ABANDON

No.	CONSTRUCTION ITEM	REFERENCE DWG
2	TYPE C INTEGRAL CURB & GUTTER (a=2.0', b=0.5')	S-410-2
14	ASPHALT CONCRETE PAVEMENT (C2-PG 70-10)	
16	CRUSHED MISC BASE (CMB)	
60	CONCRETE FLUME (d=0.5'), SEE SHEET C-05	
61	TYPE A CURB	S-410-2
62	FIBER REINFORCED JOINTED PLAIN CONCRETE PAVEMENT	CALTRANS P1
64	TYPE 842B CONCRETE BARRIER W' CHAIN LINK RAILING (TYPE 7)	CALTRANS B11-81, B11-82, B11-52
66	HMA DIKE (TYPE E, CASE F)	CALTRANS A87B
70	MINOR CONCRETE VEGETATION CONTROL	CALTRANS A77N5, A77N6
72	TYPE 842B CONCRETE BARRIER	CALTRANS B11-81, B11-82
75	IMPORT FILL (R-VALUE = 20 MIN)	
76	MIDWEST GUARDRAIL SYSTEM	CALTRANS A77L1

NOTES

1. UP ARROWS INDICATE NORTHBOUND DIRECTION AND DOWN ARROWS INDICATE SOUTHBOUND DIRECTION.

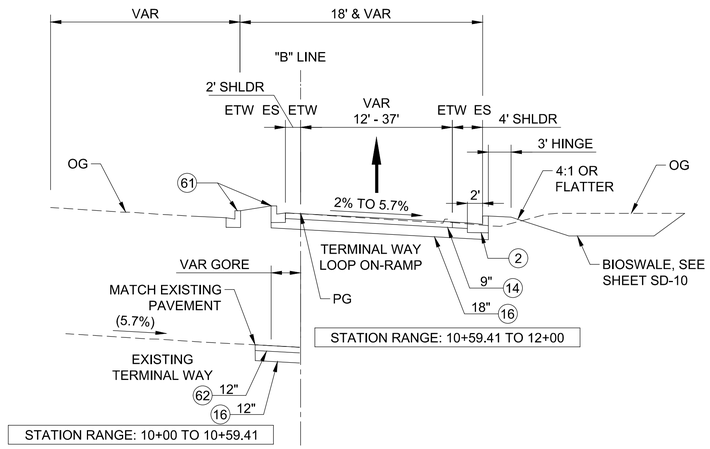

GRADE SEPARATION LOOP ON-RAMP

10XS-03 / 1C-01 "B" STA 10+00.00 TO "B" STA 12+00.00

SCALE: NTS

NO.	DATE	DRAWN	REVISIONS -	CHK'D	APP'D
			NOT FOR CONSTRUCTION		

NO.	DATE	DRAWN	REVISIONS -	CHK'D	APP'D
			80% DESIGN		

Jacobs
2600 MICHELSON DRIVE, SUITE 500
IRVINE, CA 92612
T: (949) 224-7500
F: (949) 224-7501

SCALE: NTS
DRAWN: T. ALSAQABI
CHECKED: A. BENCINI
DESIGNED: J. HANNA
ENGINEER / ARCHITECT

TERMINAL ISLAND GRADE SEPARATION

ROADWAY TYPICAL SECTIONS - 3

THE PORT OF LOS ANGELES
ENGINEERING DIVISION
425 S. PALOS VERDES STREET SAN PEDRO CA 90731-3309

DRAWING NUMBER 1-3497

SHEET NUMBER XS-03

POLAPROT_04.0223_BWD

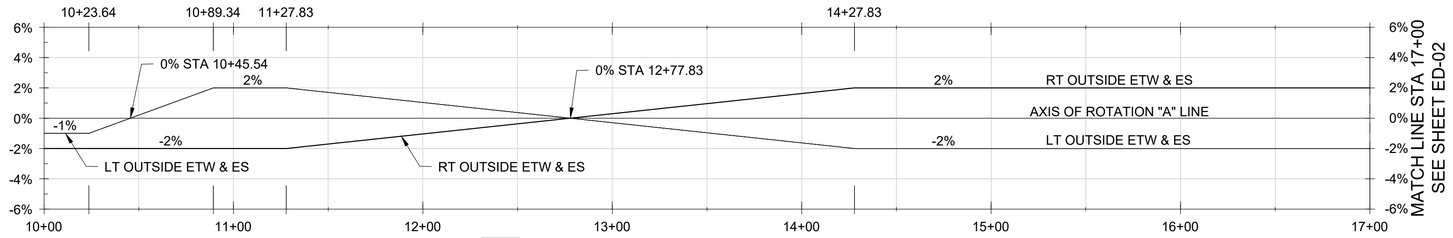

1ED-01 / ED-01 "A" LINE SUPERELEVATION DIAGRAM

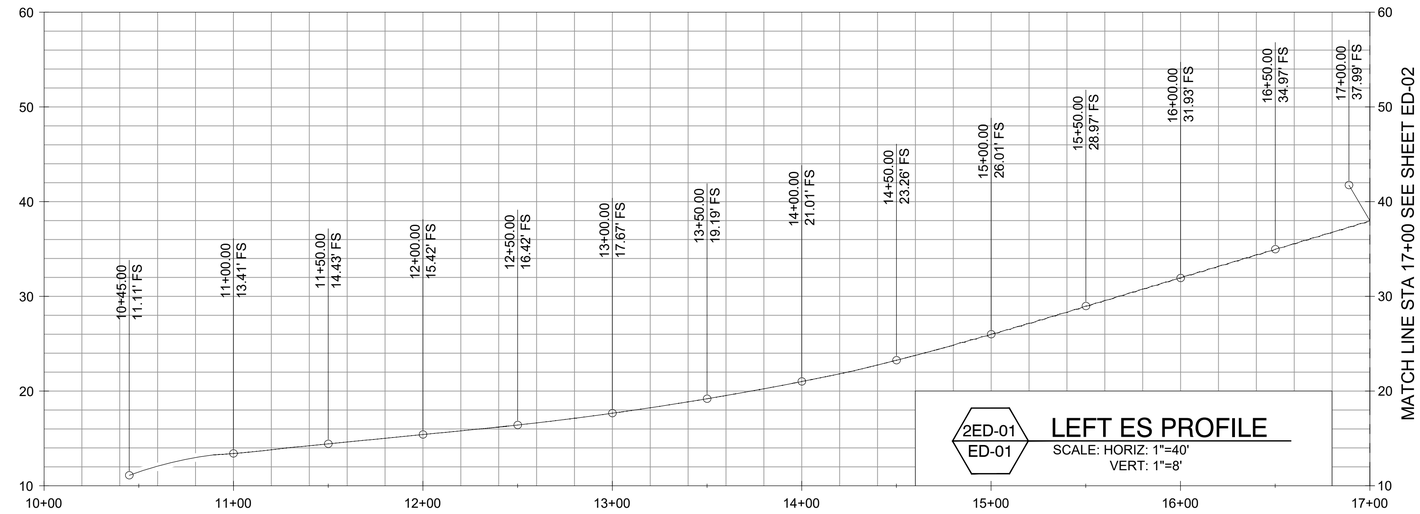

2ED-01 / ED-01 LEFT ES PROFILE
SCALE: HORIZ: 1"=40'
VERT: 1"=8'

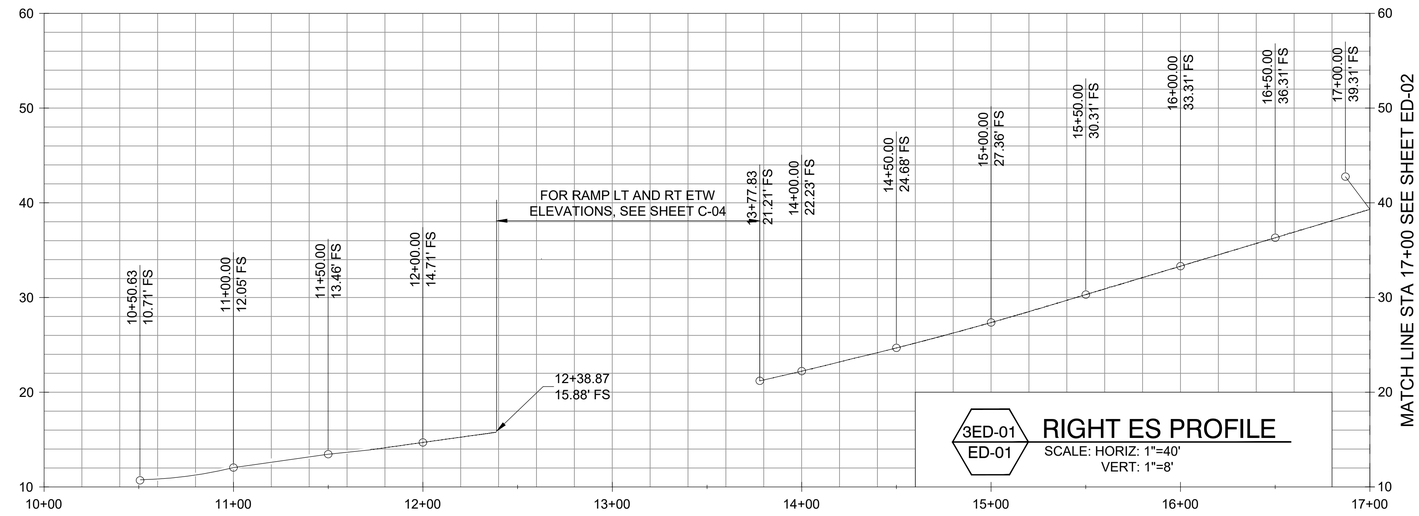

3ED-01 / ED-01 RIGHT ES PROFILE
SCALE: HORIZ: 1"=40'
VERT: 1"=8'

SHEET ____ OF 400

NO.	DATE	DRAWN	REVISIONS -	CHK'D	APP'D
			NOT FOR CONSTRUCTION		

NO.	DATE	DRAWN	REVISIONS -	CHK'D	APP'D
			80% DESIGN		

Jacobs
2600 MICHELSON DRIVE, SUITE 500
IRVINE, CA 92612
T: (949) 224-7500
F: (949) 224-7501

SCALE: AS SHOWN
DRAWN: T. PALUSZKIEWICZ
CHECKED: A. BENCINI
DESIGNED: J. HANNA
ENGINEER / ARCHITECT

TERMINAL ISLAND GRADE SEPARATION

SUPERELEVATION DIAGRAM & ES PROFILE - 1

THE PORT OF LOS ANGELES
ENGINEERING DIVISION
425 S. PALOS VERDES STREET SAN PEDRO CA 90731-3309

DRAWING NUMBER 1-3497
SHEET NUMBER ED-01

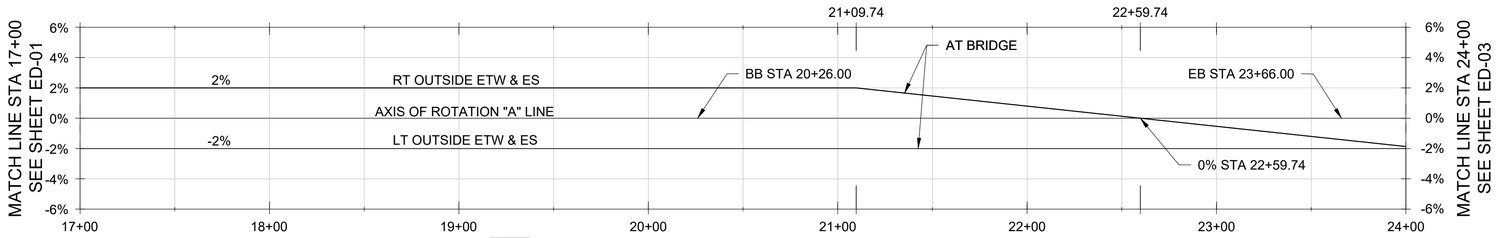

1ED-02 / ED-02 "A" LINE SUPERELEVATION DIAGRAM

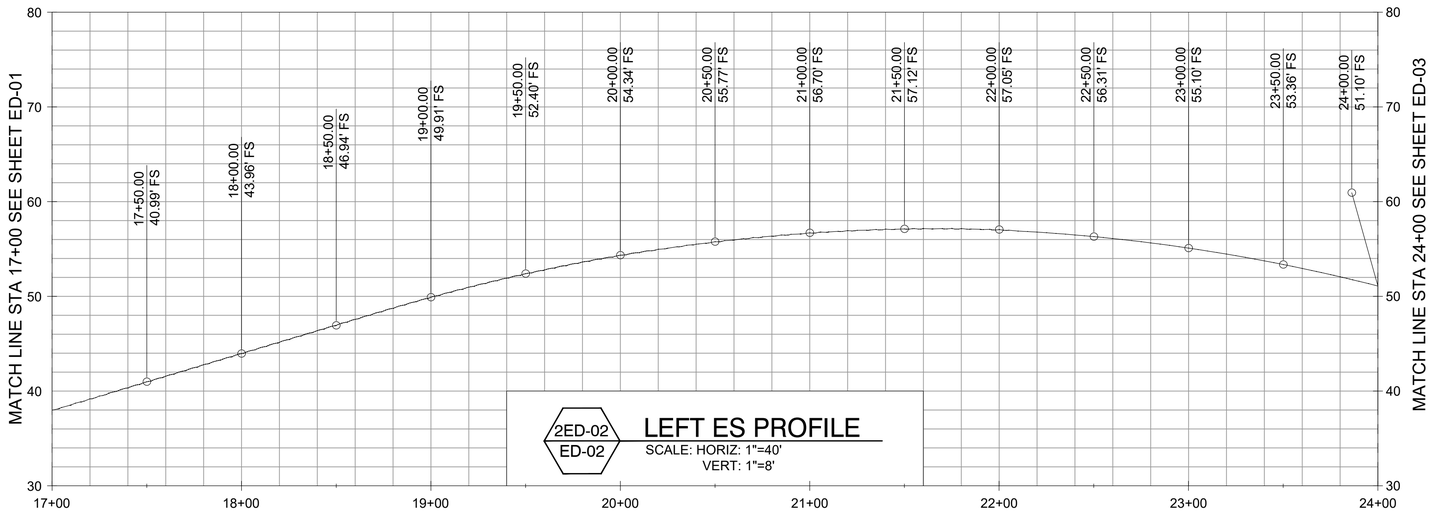

2ED-02 / ED-02 LEFT ES PROFILE
SCALE: HORIZ: 1"=40'
VERT: 1"=8'

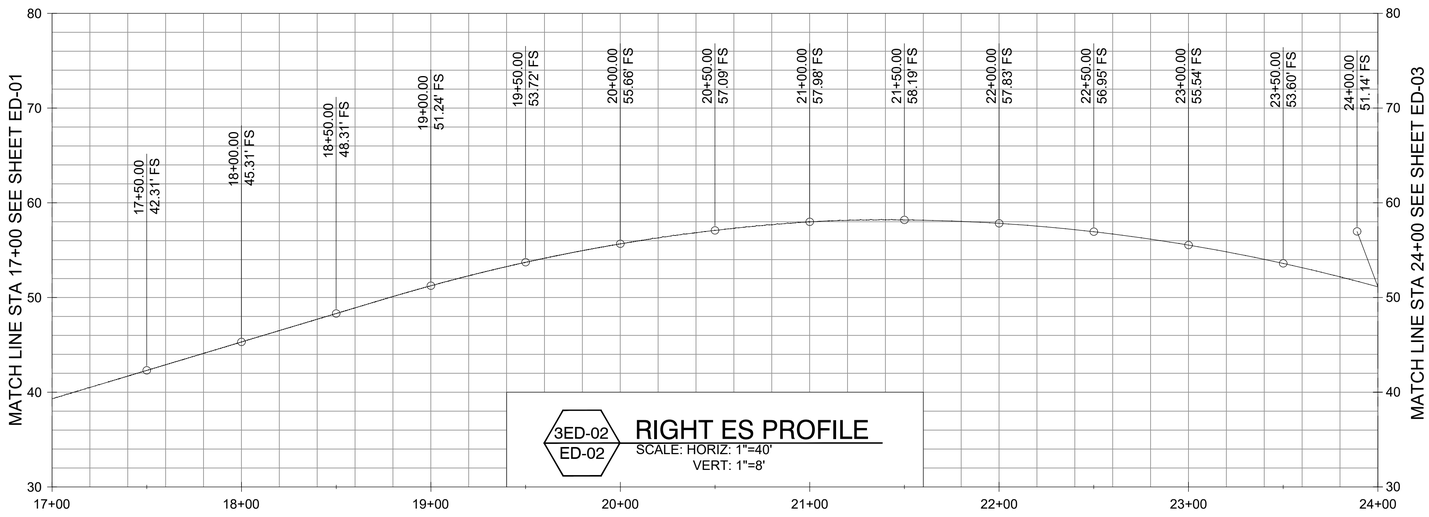

3ED-02 / ED-02 RIGHT ES PROFILE
SCALE: HORIZ: 1"=40'
VERT: 1"=8'

SHEET ____ OF 400

NO.	DATE	DRAWN	REVISIONS -	CHK'D	APP'D
			NOT FOR CONSTRUCTION		

NO.	DATE	DRAWN	REVISIONS -	CHK'D	APP'D
			80% DESIGN		

Jacobs
2600 MICHELSON DRIVE, SUITE 500
IRVINE, CA 92612
T: (949) 224-7500
F: (949) 224-7501

SCALE:	AS SHOWN
DRAWN:	T. PALUSZKIEWICZ
CHECKED:	A. BENCINI
DESIGNED:	J. HANNA
	ENGINEER / ARCHITECT

TERMINAL ISLAND GRADE SEPARATION

SUPERELEVATION DIAGRAM & ES PROFILE - 2

THE PORT OF LOS ANGELES
ENGINEERING DIVISION
425 S. PALOS VERDES STREET SAN PEDRO CA 90731-3309

DRAWING NUMBER	SHEET NUMBER
1-3497	ED-02

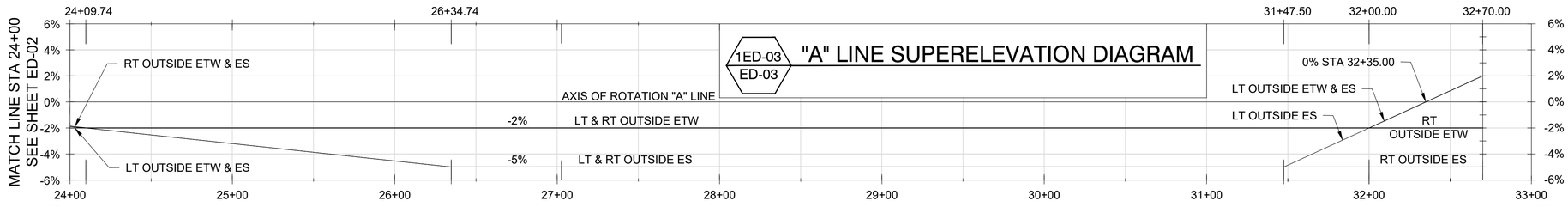

1ED-03 / ED-03 **"A" LINE SUPERELEVATION DIAGRAM**

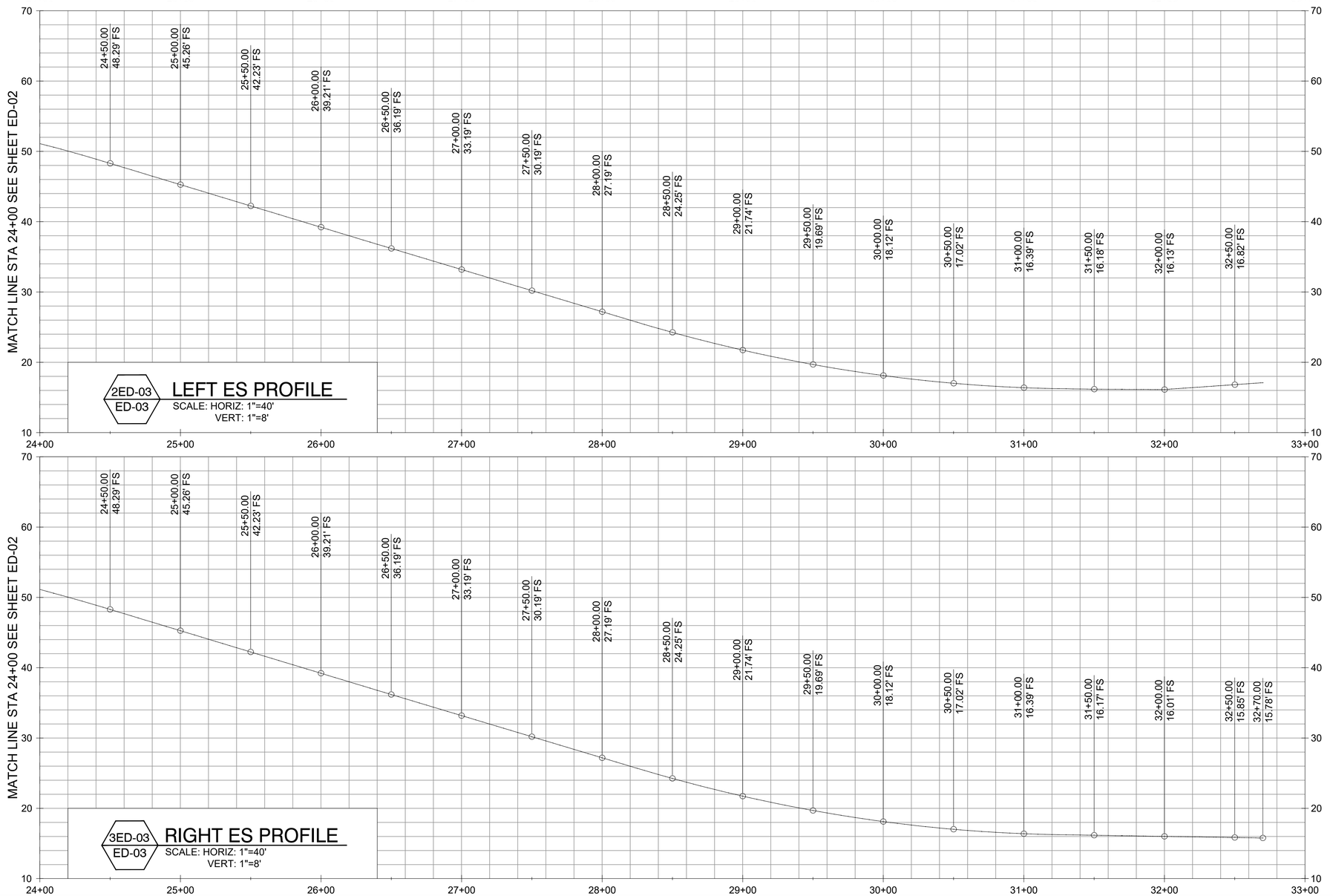

2ED-03 / ED-03 **LEFT ES PROFILE**
SCALE: HORIZ: 1"=40'
VERT: 1"=8'

3ED-03 / ED-03 **RIGHT ES PROFILE**
SCALE: HORIZ: 1"=40'
VERT: 1"=8'

SHEET ____ OF 400

NO.	DATE	DRAWN	REVISIONS -	CHK'D	APP'D
			NOT FOR CONSTRUCTION		

NO.	DATE	DRAWN	REVISIONS -	CHK'D	APP'D
			80% DESIGN		

Jacobs
2600 MICHELSON DRIVE, SUITE 600
IRVINE, CA 92612
T: (949) 224-7500
F: (949) 224-7501

SCALE:	AS SHOWN
DRAWN:	T. PALUSZKIEWICZ
CHECKED:	A. BENCINI
DESIGNED:	J. HANNA
	ENGINEER / ARCHITECT

TERMINAL ISLAND GRADE SEPARATION

SUPERELEVATION DIAGRAM & ES PROFILE - 3

THE PORT OF LOS ANGELES
ENGINEERING DIVISION
425 S. PALOS VERDES STREET SAN PEDRO CA 90731-3309

DRAWING NUMBER	SHEET NUMBER
1-3497	ED-03

POLAPRO1_042023_BWD

GENERAL GRADING NOTES:

1. ELEVATIONS ARE REFERENCED TO MEAN LOWER LOW WATER (MLLW) AS ELEVATION 0.00.
2. COORDINATES ARE BASED ON THE NORTH AMERICAN DATUM OF 1983 (NAD 83), CALIFORNIA COORDINATE SYSTEM, ZONE 5, U.S. FEET, 1995 EPOCH. REFER TO G SHEETS FOR GRADING COORDINATE TABLE.
3. SAFE CONSTRUCTION EXCAVATION SLOPES AND SHORING ARE THE RESPONSIBILITY OF CONTRACTOR AND SHALL COMPLY WITH CAL OSHA AND OTHER APPLICABLE SAFETY REGULATIONS.
4. UNLESS OTHERWISE NOTED, ELEVATIONS GIVEN ARE TO FINISHED SURFACE ELEVATION.
5. CONTOUR INTERVAL IS 5' FOR EXISTING AND 5' FOR PROPOSED.
6. CONTINUOUS INSPECTION BY ENGINEER IS REQUIRED FOR REMOVAL AND RECOMPACTION WORK. PRIOR TO PLACEMENT OF COMPACTED FILL, A REPRESENTATIVE OF ENGINEER SHALL INSPECT AND APPROVE THE BOTTOM EXCAVATIONS. NOTIFY ENGINEER AT LEAST 2 WORKING DAYS PRIOR TO PERFORMING INSPECTION OF THE BOTTOM EXCAVATIONS. ENGINEER SHALL BE GIVEN AT LEAST 2 WORKING DAYS UPON COMPLETION OF THE EXCAVATION BOTTOM INSPECTION TO PREPARE COMPLIANCE NOTICE FOR SUBGRADE INSPECTION.
7. SOILS AND GEOTECHNICAL ENGINEER:
   ANDREW KORKOS, PE, GE
8. PREPARE SUBGRADE AS DEFINED IN SPECIFICATIONS.
9. FOR GRADED SLOPES GREATER THAN 3:1, PLACE EROSION CONTROL AGENT PER SPECIFICATIONS.
10. REFER TO SD SHEETS FOR DRAIN LOCATIONS AND PIPING.
11. REFER TO LP SHEETS FOR LANDSCAPE AND FINISHED SURFACE MATERIALS AND DETAILS.
12. PROVIDE 24" OF CLASS A IMPORT TOPSOIL IN AREAS TO BE LANDSCAPED INCLUDING TREE WELLS, BLUFF RAMPS AND SLOPES.
13. COMPLETE WORK CALLED FOR ON DRAWINGS UNLESS OTHERWISE INDICATED OR IDENTIFIED AS NOT IN CONTRACT (NIC). COORDINATE WORK OUTSIDE PROJECT SITE LIMITS OR IN BLOCKED OUT AREAS WITH OTHER CONTRACTORS OR ENGINEER.
14. UNLESS OTHERWISE NOTED WALKWAY CROSS SLOPES TO HAVE MINIMUM 1% SLOPE TO DRAIN.

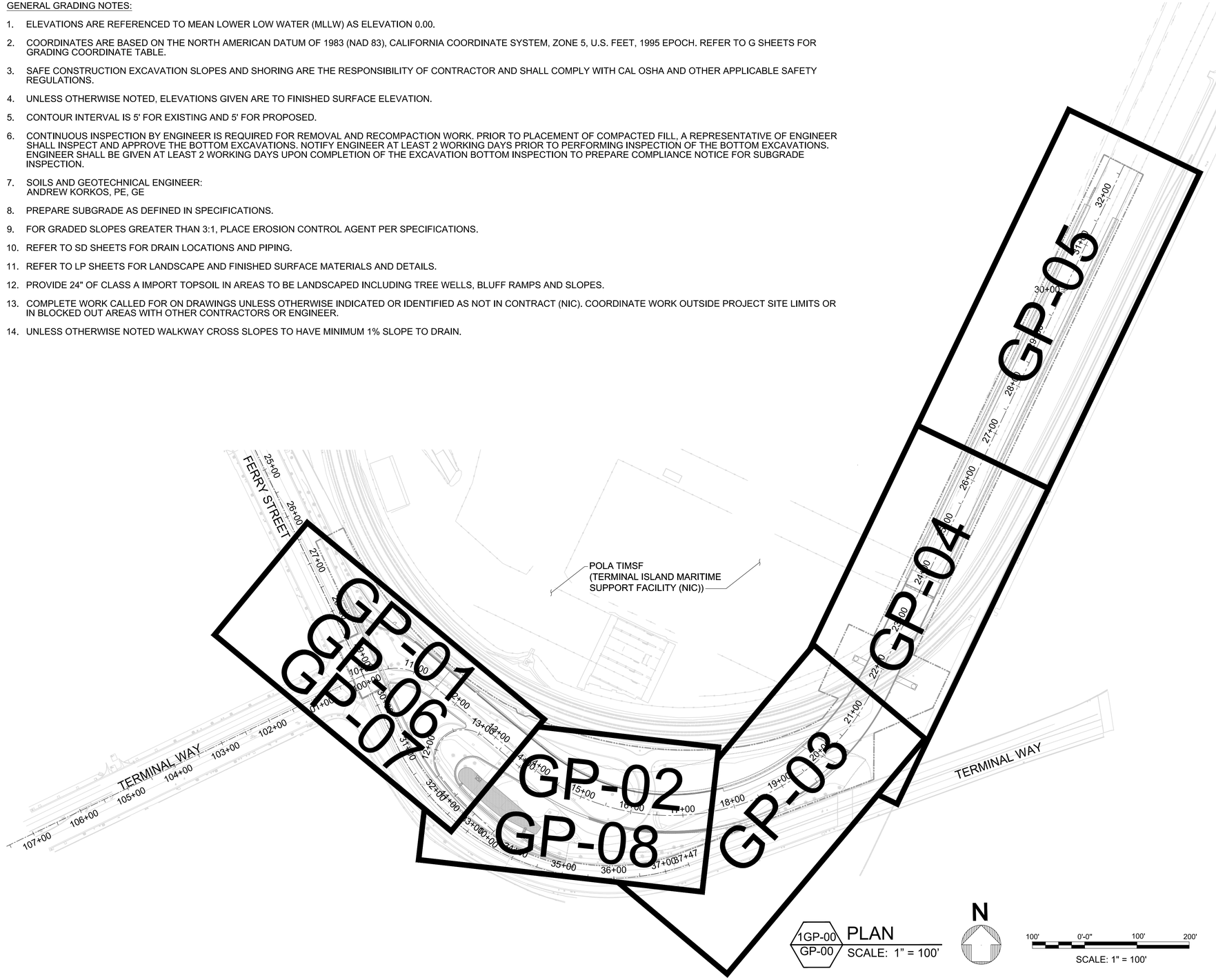

CONSTRUCTION NOTES

LEGEND OF CONSTRUCTION NOTES			
COORDINATE			
CONSTRUCT		REMODEL EXISTING	
EXISTING		REMOVE & CONSTRUCT	
REMOVE		RELOCATE	
NOT IN CONTRACT (NIC)		ABANDON	

No.	CONSTRUCTION ITEM	REFERENCE DWG
14	ASPHALT CONCRETE PAVEMENT (C2-PG 70-10)	
16	CRUSHED MISC BASE (CMB)	
21	2-INCH COLDPLANE (MILL) AC PAVEMENT OVERLAY	
62	FIBER REINFORCED JOINTED PLAIN CONCRETE PAVEMENT	CALTRANS P1

ABBREVIATIONS

AC	ASPHALT CONCRETE
CF	CURB FACE
CL	CENTERLINE
EG	EXISTING GRADE
ELEV	ELEVATION
EVC	END VERTICAL CURVE
EX	EXISTING
FG	FINISHED GRADE
FT	FEET
FL	FLOW LINE
FS	FINISHED SURFACE
LT	LEFT
PVI	POINT OF VERTICAL INTERSECTION
R	RADIUS
ST	STREET
TYP	TYPICAL
VAR	VARIES
VC	VERTICAL CURVE

LEGEND

- FENCE LINE
- PROJECT SITE LIMITS
- EDGE OF PAVEMENT / SAWCUT LINE
- RETAINING WALL
- CONCRETE PAVEMENT
- ASPHALT CONCRETE PAVEMENT
- 2" MILLING & AC PAVEMENT OVERLAY
- SDMH COVER

1GP-00 / GP-00 PLAN
SCALE: 1" = 100'

N

100' 0'-0" 100' 200'
SCALE: 1" = 100'

SHEET ____ OF 400

NO.	DATE	DRAWN	REVISIONS -	CHK'D	APP'D
			NOT FOR CONSTRUCTION		

NO.	DATE	DRAWN	REVISIONS -	CHK'D	APP'D
			80% DESIGN		

Jacobs
2600 MICHELSON DRIVE, SUITE 500
IRVINE, CA 92612
T: (949) 224-7500
F: (949) 224-7501

SCALE:	1"=100'
DRAWN:	T. PALUSZKIEWICZ
CHECKED:	A. BENCINI
DESIGNED:	J. HANNA
	ENGINEER / ARCHITECT

TERMINAL ISLAND GRADE SEPARATION

GRADING & PAVING PLAN - KEY MAP

THE PORT OF LOS ANGELES
ENGINEERING DIVISION
425 S. PALOS VERDES STREET SAN PEDRO CA 90731-3309

DRAWING NUMBER	SHEET NUMBER
1-3497	GP-00

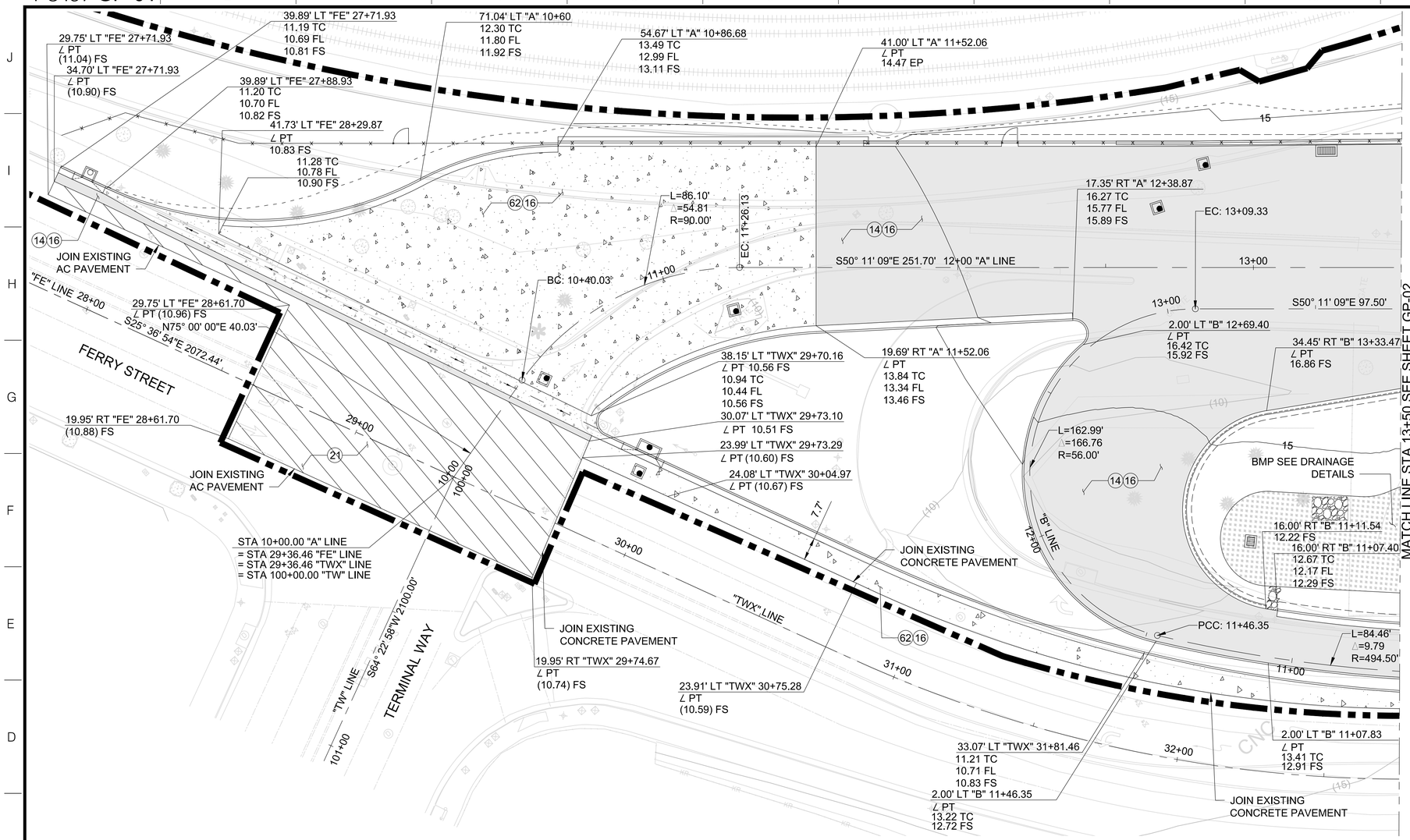

1GP-01 / GP-01 **PLAN**
SCALE: 1"=20'

N

20' 0'-0" 20' 40'
SCALE: 1" = 20'

CONSTRUCTION NOTES

LEGEND OF CONSTRUCTION NOTES	
COORDINATE	
CONSTRUCT	REMODEL EXISTING
EXISTING	REMOVE & CONSTRUCT
REMOVE	RELOCATE
NOT IN CONTRACT (NIC)	ABANDON

No.	CONSTRUCTION ITEM	REFERENCE DWG
14	ASPHALT CONCRETE PAVEMENT (C2-PG 70-10)	
16	CRUSHED MISC BASE (CMB)	
21	2-INCH COLDPLANE (MILL) AC PAVEMENT OVERLAY	
62	FIBER REINFORCED JOINTED PLAIN CONCRETE PAVEMENT	CALTRANS P1

NOTES

1. FOR PAVEMENT JOIN COORDINATES, SEE REMOVAL "R" PLANS.
2. FOR ROADWAY GEOMETRY DETAILS AND CONSTRUCTION NOTES, SEE SHEETS C-01 TO C-04.
3. FOR ROADWAY SUPERELEVATIONS & ETW PROFILES, SEE SHEETS ED-01 TO ED-03 & C-04.
4. FOR PAVEMENT AND CMB THICKNESS, SEE SHEETS XS-01 TO XS-03.
5. FOR INTERSECTION ELEVATIONS, SEE SHEET GP-06.
6. FOR JOINTING LAYOUT, SEE SHEETS GP-07 & GP-08.
7. FOR MANHOLES AND CATCH BASINS, SEE "SD" SHEETS.

LEGEND

- FENCE LINE
- PROJECT SITE LIMITS
- EDGE OF PAVEMENT / SAWCUT LINE
- RETAINING WALL
- CONCRETE PAVEMENT
- ASPHALT CONCRETE PAVEMENT
- 2" MILLING & AC PAVEMENT OVERLAY
- SDMH COVER

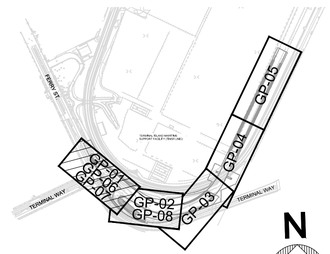

KEY MAP

SHEET ---- OF 400

NO.	DATE	DRAWN	REVISIONS -	CHK'D	APP'D
			NOT FOR CONSTRUCTION		

NO.	DATE	DRAWN	REVISIONS -	CHK'D	APP'D
			80% DESIGN		

Jacobs
2600 MICHELSON DRIVE, SUITE 500
IRVINE, CA 92612
T: (949) 224-7500
F: (949) 224-7501

SCALE: 1"=20'
DRAWN: T. PALUSZKIEWICZ
CHECKED: A. BENCINI
DESIGNED: J. HANNA
ENGINEER / ARCHITECT

TERMINAL ISLAND GRADE SEPARATION

GRADING & PAVING PLAN - 1

THE PORT OF LOS ANGELES
ENGINEERING DIVISION
425 S. PALOS VERDES STREET SAN PEDRO CA 90731-3309

DRAWING NUMBER: 1-3497
SHEET NUMBER: GP-01

POLAPR21_042023_BWD

CONSTRUCTION NOTES

LEGEND OF CONSTRUCTION NOTES			
COORDINATE			
CONSTRUCT		REMODEL EXISTING	
EXISTING		REMOVE & CONSTRUCT	
REMOVE		RELOCATE	
NOT IN CONTRACT (NIC)		ABANDON	

No.	CONSTRUCTION ITEM	REFERENCE DWG
14	ASPHALT CONCRETE PAVEMENT (C2-PG 70-10)	
16	CRUSHED MISC BASE (CMB)	
21	2-INCH COLDPLANE (MILL) AC PAVEMENT OVERLAY	
62	FIBER REINFORCED JOINTED PLAIN CONCRETE PAVEMENT	CALTRANS P1

NOTES

1. FOR PAVEMENT JOIN COORDINATES, SEE REMOVAL "R" PLANS.
2. FOR ROADWAY GEOMETRY DETAILS AND CONSTRUCTION NOTES, SEE SHEETS C-01 TO C-04.
3. FOR ROADWAY SUPERELEVATIONS & ETW PROFILES, SEE SHEETS ED-01 TO ED-03 & C-04.
4. FOR PAVEMENT AND CMB THICKNESS, SEE SHEETS XS-01 TO XS-03.
5. FOR INTERSECTION ELEVATIONS, SEE SHEET GP-06.
6. FOR JOINTING LAYOUT, SEE SHEETS GP-07 & GP-08.
7. FOR MANHOLES AND CATCH BASINS, SEE "SD" SHEETS.

LEGEND

- FENCE LINE
- PROJECT SITE LIMITS
- EDGE OF PAVEMENT / SAWCUT LINE
- RETAINING WALL
- CONCRETE PAVEMENT
- ASPHALT CONCRETE PAVEMENT
- 2" MILLING & AC PAVEMENT OVERLAY
- SDMH COVER

MATCH LINE STA 17+50 SEE SHEET GP-03

WALL 417
SEE "RW" SHEETS
31.75' RT "A" 17+39.31 RW LOL
41.69 FS

"A" LINE

TERMINAL WAY

MATCH LINE STA 13+50 SEE SHEET GP-01

BC: 13+77.83

STA 14+06.83 "B" LINE
= 14.00' RT "A" 13+77.83

34.75' RT "A" 13+86.96
21.62 FS

30.00' RT "A" 15+26.64
∠ PT
28.94 FS

34.00' RT "A" 15+30.35
∠ PT
29.02 FS

27.40' LT "TWX" 35+02.07
24.00 TC
23.50 FL
23.62 FS

BMP SEE DRAINAGE DETAILS

STA 10+00.00 "B" LINE
= 28.15' LT "TWX" 33+43.30

22.84' LT "TWX" 35+01.80
∠ PT
(23.79) FS

20.84' LT "TWX" 35+01.74
∠ PT
(23.93) FS

BC: 10+61.89

"B" LINE
N46° 43' 46"W 61.89'

"TWX" LINE

23.34' LT "TWX" 33+56.24
∠ PT
(17.48) FS

23.94' LT "TWX" 33+96.58
∠ PT
(19.10) FS

21.94' LT "TWX" 33+96.53
∠ PT
(19.19) FS

JOIN EXISTING
CONCRETE
PAVEMENT

JOIN EXISTING
AC PAVEMENT

1GP-02 / GP-02 PLAN
SCALE: 1"=20'

20' 0'-0" 20' 40'
SCALE: 1" = 20'

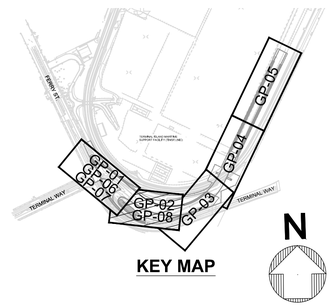

KEY MAP

SHEET ____ OF 400

NO.	DATE	DRAWN	REVISIONS -	CHK'D	APP'D
			NOT FOR CONSTRUCTION		

NO.	DATE	DRAWN	REVISIONS -	CHK'D	APP'D
			80% DESIGN		

Jacobs
2600 MICHELSON DRIVE, SUITE 500
IRVINE, CA 92612
T: (949) 224-7500
F: (949) 224-7501

SCALE: 1"=20'
DRAWN: T. PALUSZKIEWICZ
CHECKED: A. BENCINI
DESIGNED: J. HANNA
ENGINEER / ARCHITECT

TERMINAL ISLAND GRADE SEPARATION

GRADING & PAVING PLAN - 2

THE PORT OF LOS ANGELES
ENGINEERING DIVISION
425 S. PALOS VERDES STREET SAN PEDRO CA 90731-3309

DRAWING NUMBER: 1-3497
SHEET NUMBER: GP-02

POLAPRO1_04/2023_BWD

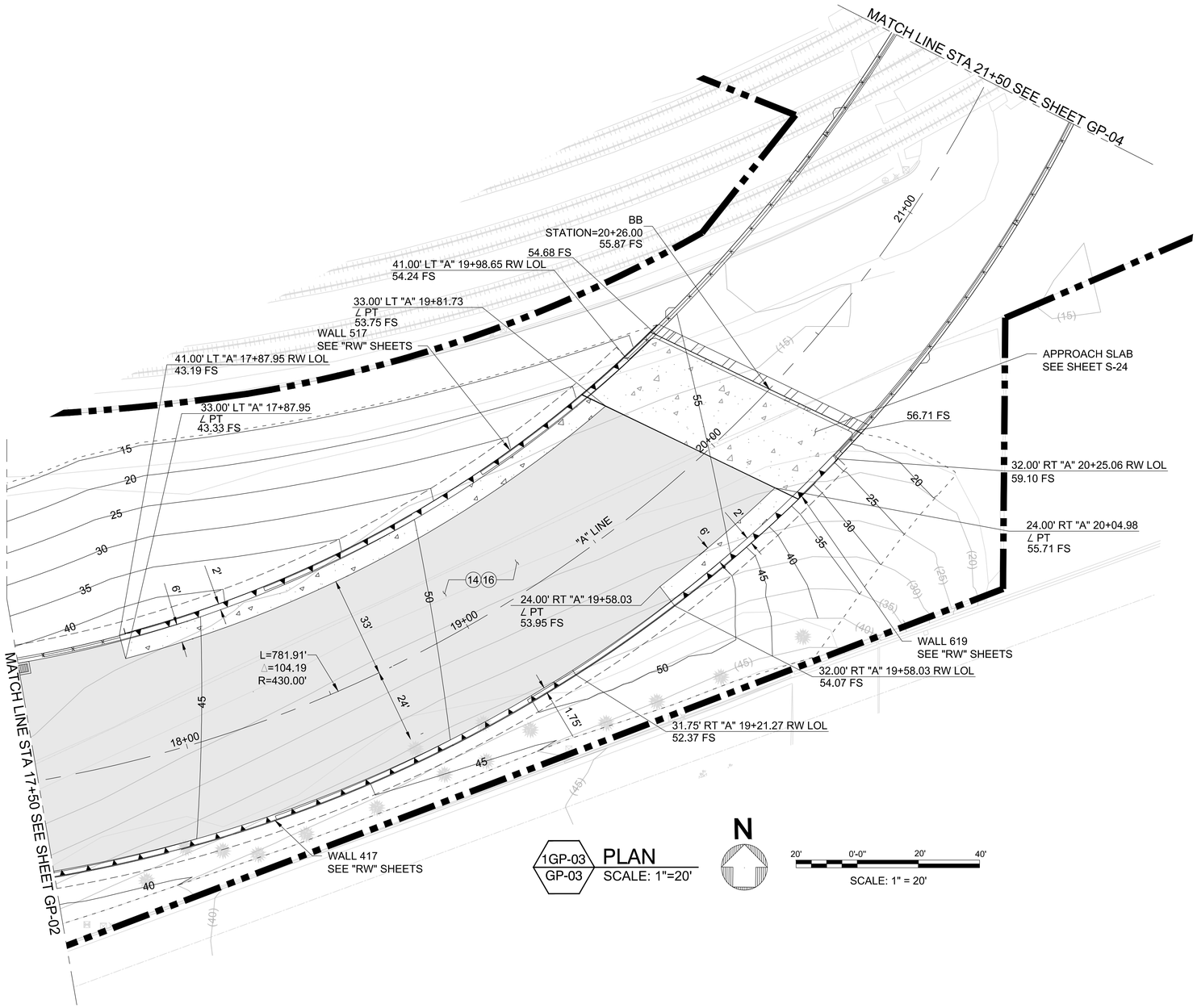

1GP-03 / GP-03 **PLAN**
SCALE: 1"=20'

N

20' 0'-0" 20' 40'
SCALE: 1" = 20'

CONSTRUCTION NOTES

LEGEND OF CONSTRUCTION NOTES			
COORDINATE			
CONSTRUCT		REMODEL EXISTING	
EXISTING		REMOVE & CONSTRUCT	
REMOVE		RELOCATE	
NOT IN CONTRACT (NIC)		ABANDON	

No.	CONSTRUCTION ITEM	REFERENCE DWG
14	ASPHALT CONCRETE PAVEMENT (C2-PG 70-10)	
16	CRUSHED MISC BASE (CMB)	
21	2-INCH COLDPLANE (MILL) AC PAVEMENT OVERLAY	
62	FIBER REINFORCED JOINTED PLAIN CONCRETE PAVEMENT	CALTRANS P1

NOTES

1. FOR PAVEMENT JOIN COORDINATES, SEE REMOVAL "R" PLANS.
2. FOR ROADWAY GEOMETRY DETAILS AND CONSTRUCTION NOTES, SEE SHEETS C-01 TO C-04.
3. FOR ROADWAY SUPERELEVATIONS & ETW PROFILES, SEE SHEETS ED-01 TO ED-03 & C-04.
4. FOR PAVEMENT AND CMB THICKNESS, SEE SHEETS XS-01 TO XS-03.
5. FOR INTERSECTION ELEVATIONS, SEE SHEET GP-06.
6. FOR JOINTING LAYOUT, SEE SHEETS GP-07 & GP-08.
7. FOR MANHOLES AND CATCH BASINS, SEE "SD" SHEETS.

LEGEND

- FENCE LINE
- PROJECT SITE LIMITS
- EDGE OF PAVEMENT / SAWCUT LINE
- RETAINING WALL
- CONCRETE PAVEMENT
- ASPHALT CONCRETE PAVEMENT
- 2" MILLING & AC PAVEMENT OVERLAY
- SDMH COVER

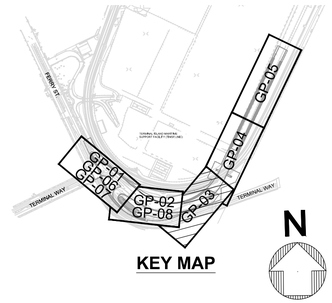

KEY MAP

SHEET ____ OF 400

NO.	DATE	DRAWN	REVISIONS -	CHK'D	APP'D
			NOT FOR CONSTRUCTION		

NO.	DATE	DRAWN	REVISIONS -	CHK'D	APP'D
			80% DESIGN		

Jacobs
2500 MICHELSON DRIVE, SUITE 500
IRVINE, CA 92612
T: (949) 224-7500
F: (949) 224-7501

SCALE: 1"=20'
DRAWN: T. PALUSZKIEWICZ
CHECKED: A. BENCINI
DESIGNED: J. HANNA
ENGINEER / ARCHITECT

TERMINAL ISLAND GRADE SEPARATION

GRADING & PAVING PLAN - 3

THE PORT OF LOS ANGELES
ENGINEERING DIVISION
425 S. PALOS VERDES STREET SAN PEDRO CA 90731-3309

DRAWING NUMBER: 1-3497
SHEET NUMBER: GP-03

POLAFR01_04/2023_BWD

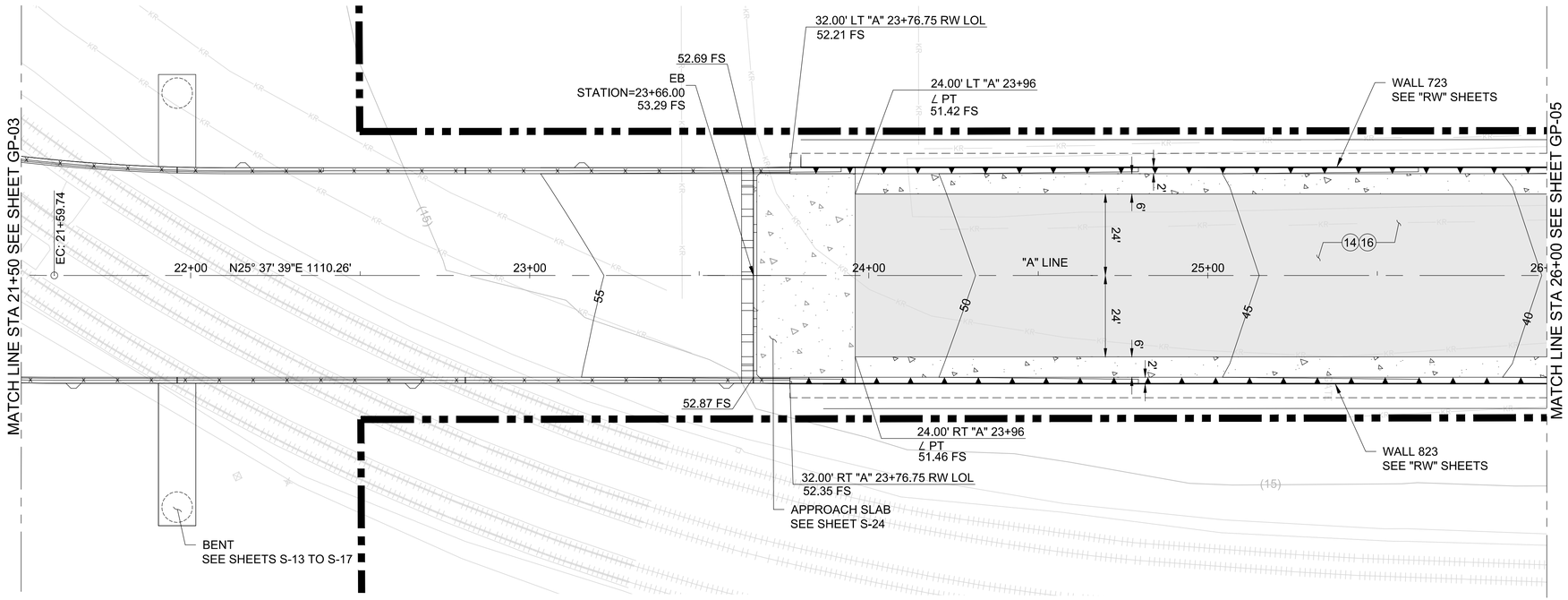

1GP-04 / GP-04 **PLAN**
SCALE: 1"=20'

20' 0'-0" 20' 40'
SCALE: 1" = 20'

CONSTRUCTION NOTES

LEGEND OF CONSTRUCTION NOTES			
COORDINATE			
CONSTRUCT		REMODEL EXISTING	
EXISTING		REMOVE & CONSTRUCT	
REMOVE		RELOCATE	
NOT IN CONTRACT (NIC)		ABANDON	

No.	CONSTRUCTION ITEM	REFERENCE DWG
14	ASPHALT CONCRETE PAVEMENT (C2-PG 70-10)	
16	CRUSHED MISC BASE (CMB)	
21	2-INCH COLDPLANE (MILL) AC PAVEMENT OVERLAY	
62	FIBER REINFORCED JOINTED PLAIN CONCRETE PAVEMENT	CALTRANS P1

NOTES

1. FOR PAVEMENT JOIN COORDINATES, SEE REMOVAL "R" PLANS.
2. FOR ROADWAY GEOMETRY DETAILS AND CONSTRUCTION NOTES, SEE SHEETS C-01 TO C-04.
3. FOR ROADWAY SUPERELEVATIONS & ETW PROFILES, SEE SHEETS ED-01 TO ED-03 & C-04.
4. FOR PAVEMENT AND CMB THICKNESS, SEE SHEETS XS-01 TO XS-03.
5. FOR INTERSECTION ELEVATIONS, SEE SHEET GP-06.
6. FOR JOINTING LAYOUT, SEE SHEETS GP-07 & GP-08.
7. FOR MANHOLES AND CATCH BASINS, SEE "SD" SHEETS.

LEGEND

- FENCE LINE
- PROJECT SITE LIMITS
- EDGE OF PAVEMENT / SAWCUT LINE
- RETAINING WALL
- CONCRETE PAVEMENT
- ASPHALT CONCRETE PAVEMENT
- 2" MILLING & AC PAVEMENT OVERLAY
- SDMH COVER

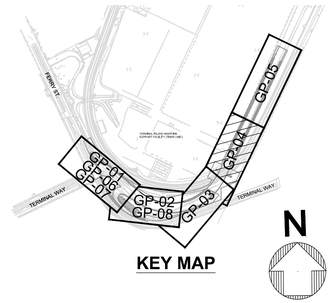

KEY MAP

SHEET ____ OF 400

NO.	DATE	DRAWN	REVISIONS -	CHK'D	APP'D
			NOT FOR CONSTRUCTION		

NO.	DATE	DRAWN	REVISIONS -	CHK'D	APP'D
			80% DESIGN		

Jacobs
2500 MICHELSON DRIVE, SUITE 500
IRVINE, CA 92612
T: (949) 224-7500
F: (949) 224-7501

SCALE: 1"=20'
DRAWN: T. PALUSZKIEWICZ
CHECKED: A. BENCINI
DESIGNED: J. HANNA
ENGINEER / ARCHITECT

TERMINAL ISLAND GRADE SEPARATION

GRADING & PAVING PLAN - 4

THE PORT OF LOS ANGELES
ENGINEERING DIVISION
425 S. PALOS VERDES STREET SAN PEDRO CA 90731-3309

DRAWING NUMBER: 1-3497
SHEET NUMBER: GP-04

POLAPRD1_04/2023_BWD

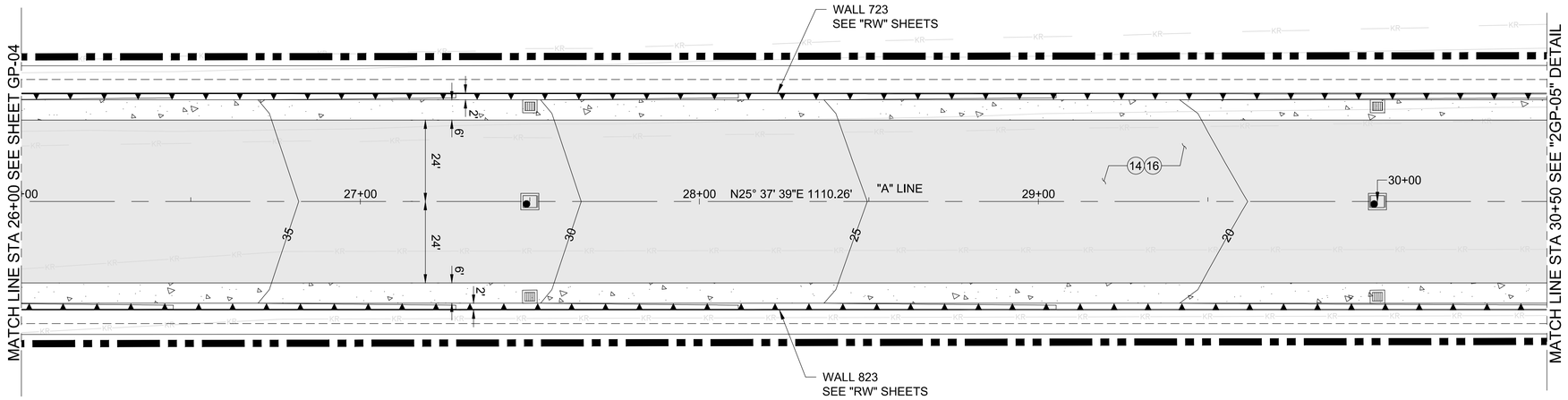

1GP-05 / GP-05 **PLAN**
SCALE: 1"=20'





SCALE: 1" = 20'

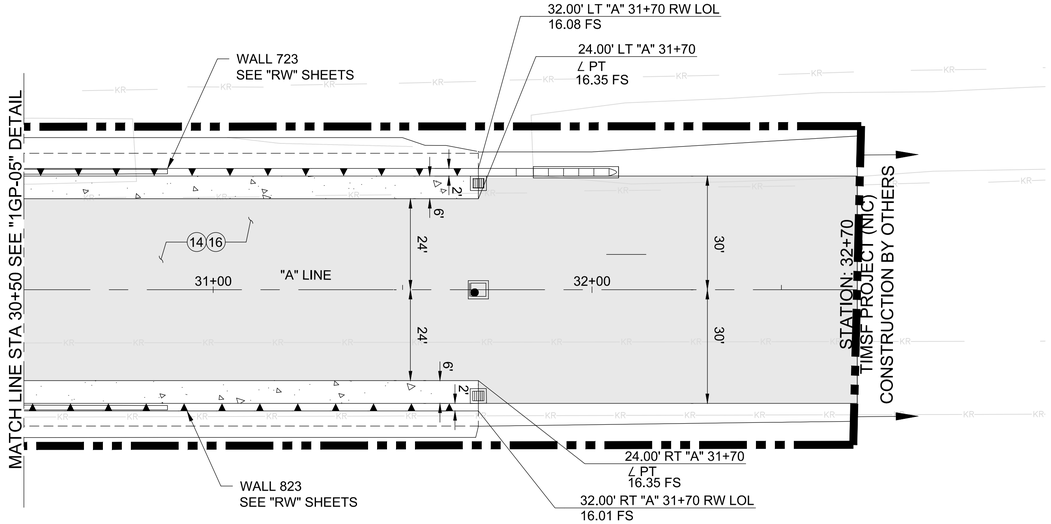

2GP-05 / GP-05 **PLAN**
SCALE: 1"=20'



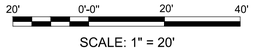

SCALE: 1" = 20'

CONSTRUCTION NOTES

LEGEND OF CONSTRUCTION NOTES

- COORDINATE
- CONSTRUCT
- EXISTING
- REMOVE
- NOT IN CONTRACT (NIC)
- REMODEL EXISTING
- REMOVE & CONSTRUCT
- RELOCATE
- ABANDON

No.	CONSTRUCTION ITEM	REFERENCE DWG
14	ASPHALT CONCRETE PAVEMENT (C2-PG 70-10)	
16	CRUSHED MISC BASE (CMB)	
21	2-INCH COLDPLANE (MILL) AC PAVEMENT OVERLAY	
62	FIBER REINFORCED JOINTED PLAIN CONCRETE PAVEMENT	CALTRANS P1

NOTES

1. FOR PAVEMENT JOIN COORDINATES, SEE REMOVAL "R" PLANS.
2. FOR ROADWAY GEOMETRY DETAILS AND CONSTRUCTION NOTES, SEE SHEETS C-01 TO C-04.
3. FOR ROADWAY SUPERELEVATIONS & ETW PROFILES, SEE SHEETS ED-01 TO ED-03 & C-04.
4. FOR PAVEMENT AND CMB THICKNESS, SEE SHEETS XS-01 TO XS-03.
5. FOR INTERSECTION ELEVATIONS, SEE SHEET GP-06.
6. FOR JOINTING LAYOUT, SEE SHEETS GP-07 & GP-08.
7. FOR MANHOLES AND CATCH BASINS, SEE "SD" SHEETS.

LEGEND

- FENCE LINE
- PROJECT SITE LIMITS
- EDGE OF PAVEMENT / SAWCUT LINE
- RETAINING WALL
- CONCRETE PAVEMENT
- ASPHALT CONCRETE PAVEMENT
- 2" MILLING & AC PAVEMENT OVERLAY
- SDMH COVER

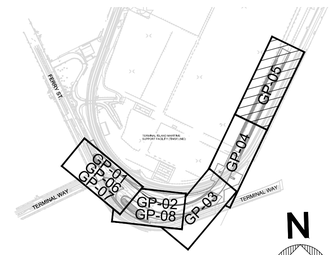

KEY MAP

SHEET ---- OF 400

NO.	DATE	DRAWN	REVISIONS -	CHK'D	APP'D
			NOT FOR CONSTRUCTION		

NO.	DATE	DRAWN	REVISIONS -	CHK'D	APP'D
			80% DESIGN		

Jacobs
2600 MICHELSON DRIVE, SUITE 500
IRVINE, CA 92612
T: (949) 224-7500
F: (949) 224-7501

SCALE: 1"=20'
DRAWN: T. PALUSZKIEWICZ
CHECKED: A. BENCINI
DESIGNED: J. HANNA
ENGINEER / ARCHITECT

TERMINAL ISLAND GRADE SEPARATION

GRADING & PAVING PLAN - 5

THE PORT OF LOS ANGELES
ENGINEERING DIVISION
425 S. PALOS VERDES STREET SAN PEDRO CA 90731-3309

DRAWING NUMBER: 1-3497
SHEET NUMBER: GP-05

POLAPRDT_042023_BWD

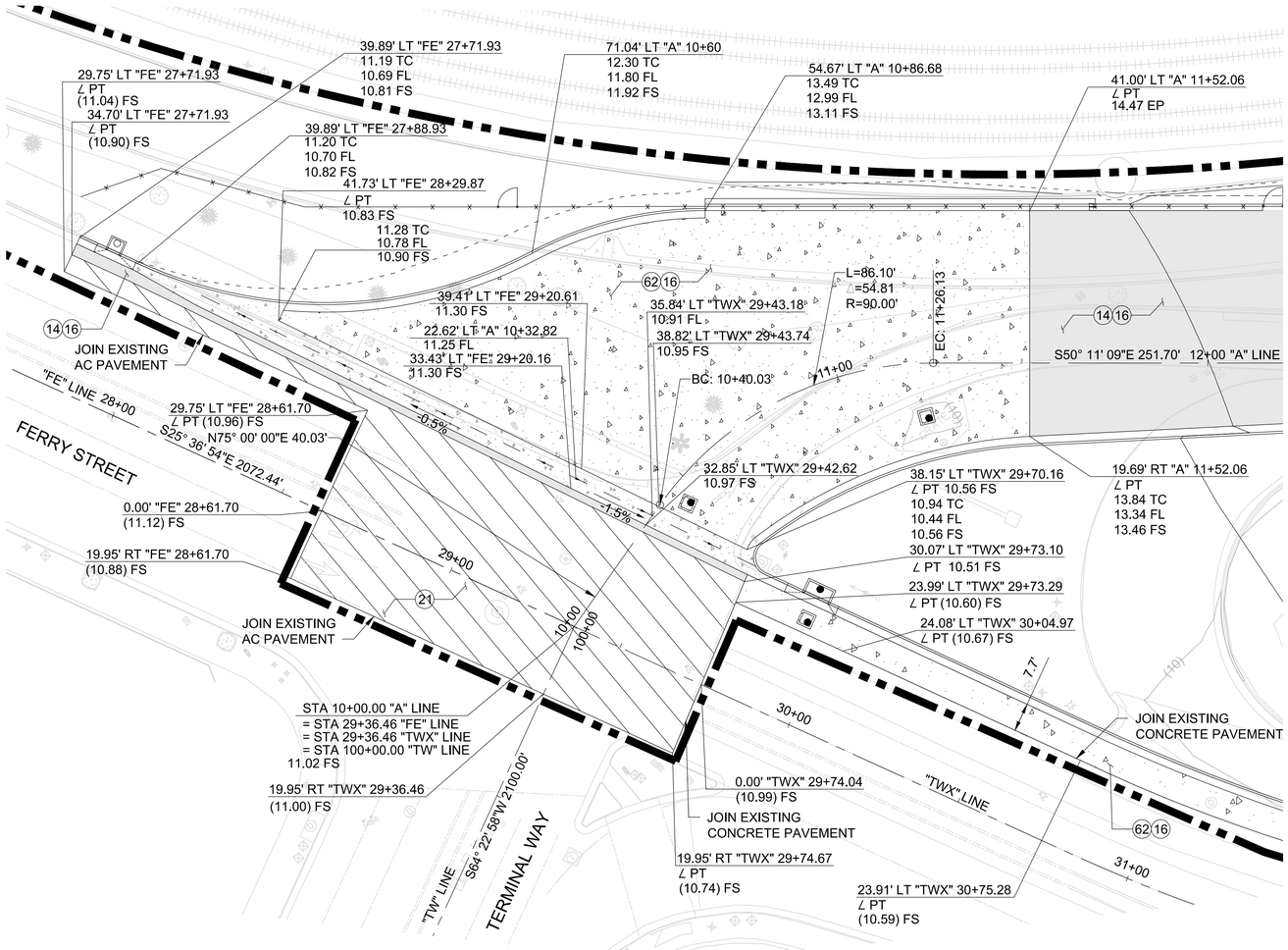

1GP-06 / GP-06 **INTERSECTION GRADING PLAN**
SCALE: 1"=20'

N

20' 0'-0" 20' 40'
SCALE: 1" = 20'

CONSTRUCTION NOTES

LEGEND OF CONSTRUCTION NOTES			
COORDINATE			
CONSTRUCT		REMODEL EXISTING	
EXISTING		REMOVE & CONSTRUCT	
REMOVE		RELOCATE	
NOT IN CONTRACT (NIC)		ABANDON	

No.	CONSTRUCTION ITEM	REFERENCE DWG
14	ASPHALT CONCRETE PAVEMENT (C2-PG 70-10)	
16	CRUSHED MISC BASE (CMB)	
21	2-INCH COLDPLANE (MILL) AC PAVEMENT OVERLAY	
62	FIBER REINFORCED JOINTED PLAIN CONCRETE PAVEMENT	CALTRANS P1

NOTES

1. FOR PAVEMENT JOIN COORDINATES, SEE REMOVAL "R" PLANS.
2. FOR ROADWAY GEOMETRY DETAILS AND CONSTRUCTION NOTES, SEE SHEETS C-01 TO C-04.
3. FOR ROADWAY SUPERELEVATIONS & ETW PROFILES, SEE SHEETS ED-01 TO ED-03 & C-04.
4. FOR PAVEMENT AND CMB THICKNESS, SEE SHEETS XS-01 TO XS-03.
5. FOR INTERSECTION ELEVATIONS, SEE SHEET GP-06.
6. FOR JOINTING LAYOUT, SEE SHEETS GP-07 & GP-08.
7. FOR MANHOLES AND CATCH BASINS, SEE "SD" SHEETS.

LEGEND

- FENCE LINE
- PROJECT SITE LIMITS
- EDGE OF PAVEMENT / SAWCUT LINE
- RETAINING WALL
- CONCRETE PAVEMENT
- ASPHALT CONCRETE PAVEMENT
- 2" MILLING & AC PAVEMENT OVERLAY
- SDMH COVER

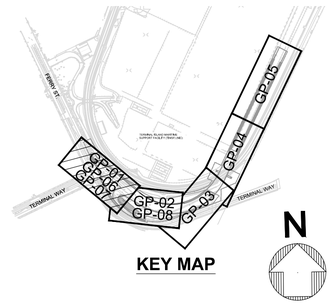

KEY MAP

SHEET ____ OF 400

NO.	DATE	DRAWN	REVISIONS -	CHK'D	APP'D
			NOT FOR CONSTRUCTION		

NO.	DATE	DRAWN	REVISIONS -	CHK'D	APP'D
			80% DESIGN		

Jacobs
2600 MICHELSON DRIVE, SUITE 500
IRVINE, CA 92612
T: (949) 224-7500
F: (949) 224-7501

SCALE:	1"=20'
DRAWN:	T. PALUSZKIEWICZ
CHECKED:	A. BENCINI
DESIGNED:	J. HANNA
	ENGINEER / ARCHITECT

TERMINAL ISLAND GRADE SEPARATION

GRADING & PAVING PLAN - 6

THE PORT OF LOS ANGELES
ENGINEERING DIVISION
425 S. PALOS VERDES STREET SAN PEDRO CA 90731-3309

DRAWING NUMBER: 1-3497
SHEET NUMBER: GP-06

POLAPR01_04/2023_BWD

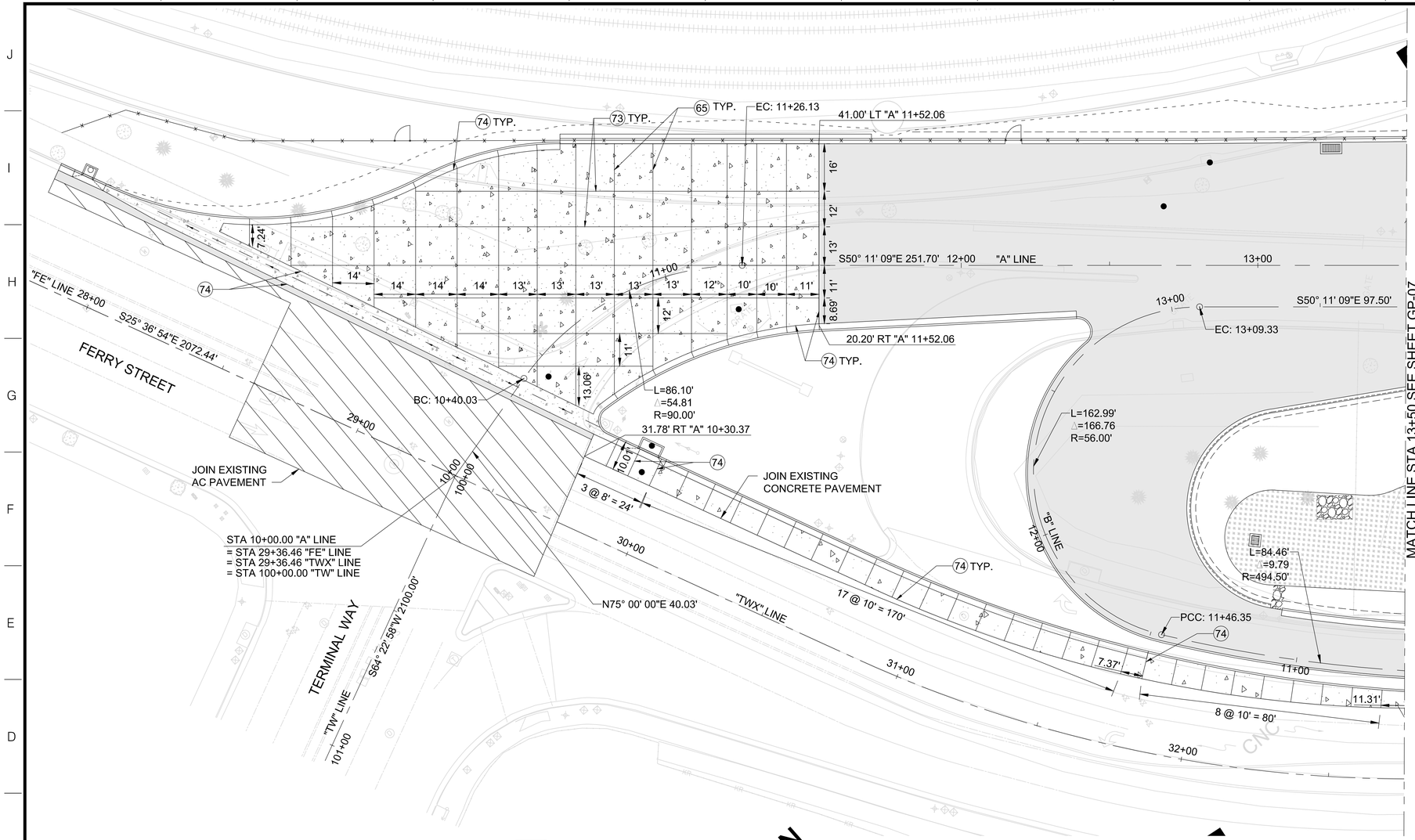

1GP-07 / GP-07 **JPCP JOINT LAYOUT**
SCALE: 1"=20'

N

20' 0'-0" 20' 40'
SCALE: 1" = 20'

CONSTRUCTION NOTES

LEGEND OF CONSTRUCTION NOTES	
COORDINATE	
CONSTRUCT	REMODEL EXISTING
EXISTING	REMOVE & CONSTRUCT
REMOVE	RELOCATE
NOT IN CONTRACT (NIC)	ABANDON

No.	CONSTRUCTION ITEM	REFERENCE DWG
65	TRANSVERSE JOINT WITH DOWEL BARS	CALTRANS P1, P10
73	LONGITUDINAL JOINT WITH TIE BARS	CALTRANS P1, P15
74	ISOLATION JOINT	CALTRANS P18

LEGEND

- FENCE LINE
- PROJECT SITE LIMITS
- EDGE OF PAVEMENT / SAWCUT LINE
- RETAINING WALL
- CONCRETE PAVEMENT
- ASPHALT CONCRETE PAVEMENT
- 2" MILLING & AC PAVEMENT OVERLAY
- SDMH COVER

NOTES

1. JPCP LAYOUT AS SHOWN OR DIRECTED BY ENGINEER.
2. ISOLATION JOINTS TO BE PLACED WHERE CONCRETE PAVEMENT ABUTS EXISTING PAVEMENT, PROPOSED CURBS, DRAINAGE STRUCTURES, UTILITY VAULTS / MAINTENANCE HOLES, AND LIGHT POLE FOUNDATIONS PER CALTRANS STANDARD PLAN P18.
3. SEE SHEETS XS-01 THROUGH XS-03 FOR PAVEMENT AND CMB THICKNESS.

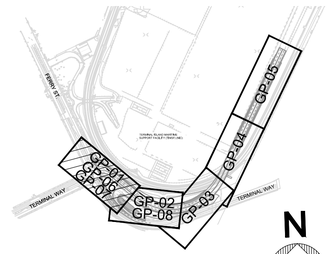

KEY MAP

SHEET ____ OF 400

NO.	DATE	DRAWN	REVISIONS -	CHK'D	APP'D
			NOT FOR CONSTRUCTION		

NO.	DATE	DRAWN	REVISIONS -	CHK'D	APP'D
			80% DESIGN		

Jacobs
2600 MICHELSON DRIVE, SUITE 500
IRVINE, CA 92612
T: (949) 224-7500
F: (949) 224-7501

SCALE: 1"=20'
DRAWN: T. ALSAQABI
CHECKED: A. BENCINI
DESIGNED: J. HANNA
ENGINEER / ARCHITECT

TERMINAL ISLAND GRADE SEPARATION

JOINTING PLAN - 1

THE PORT OF LOS ANGELES
ENGINEERING DIVISION
425 S. PALOS VERDES STREET SAN PEDRO CA 90731-3309

DRAWING NUMBER 1-3497
SHEET NUMBER GP-07

POLAPR01_042023_BWD

CONSTRUCTION NOTES

LEGEND OF CONSTRUCTION NOTES	
COORDINATE	
CONSTRUCT	REMODEL EXISTING
EXISTING	REMOVE & CONSTRUCT
REMOVE	RELOCATE
NOT IN CONTRACT (NIC)	ABANDON

No.	CONSTRUCTION ITEM	REFERENCE DWG
65	TRANSVERSE JOINT WITH DOWEL BARS	CALTRANS P1, P10
73	LONGITUDINAL JOINT WITH TIE BARS	CALTRANS P1, P15
74	ISOLATION JOINT	CALTRANS P18

LEGEND

- FENCE LINE
- PROJECT SITE LIMITS
- EDGE OF PAVEMENT / SAWCUT LINE
- RETAINING WALL
- CONCRETE PAVEMENT
- ASPHALT CONCRETE PAVEMENT
- 2" MILLING & AC PAVEMENT OVERLAY
- SDMH COVER

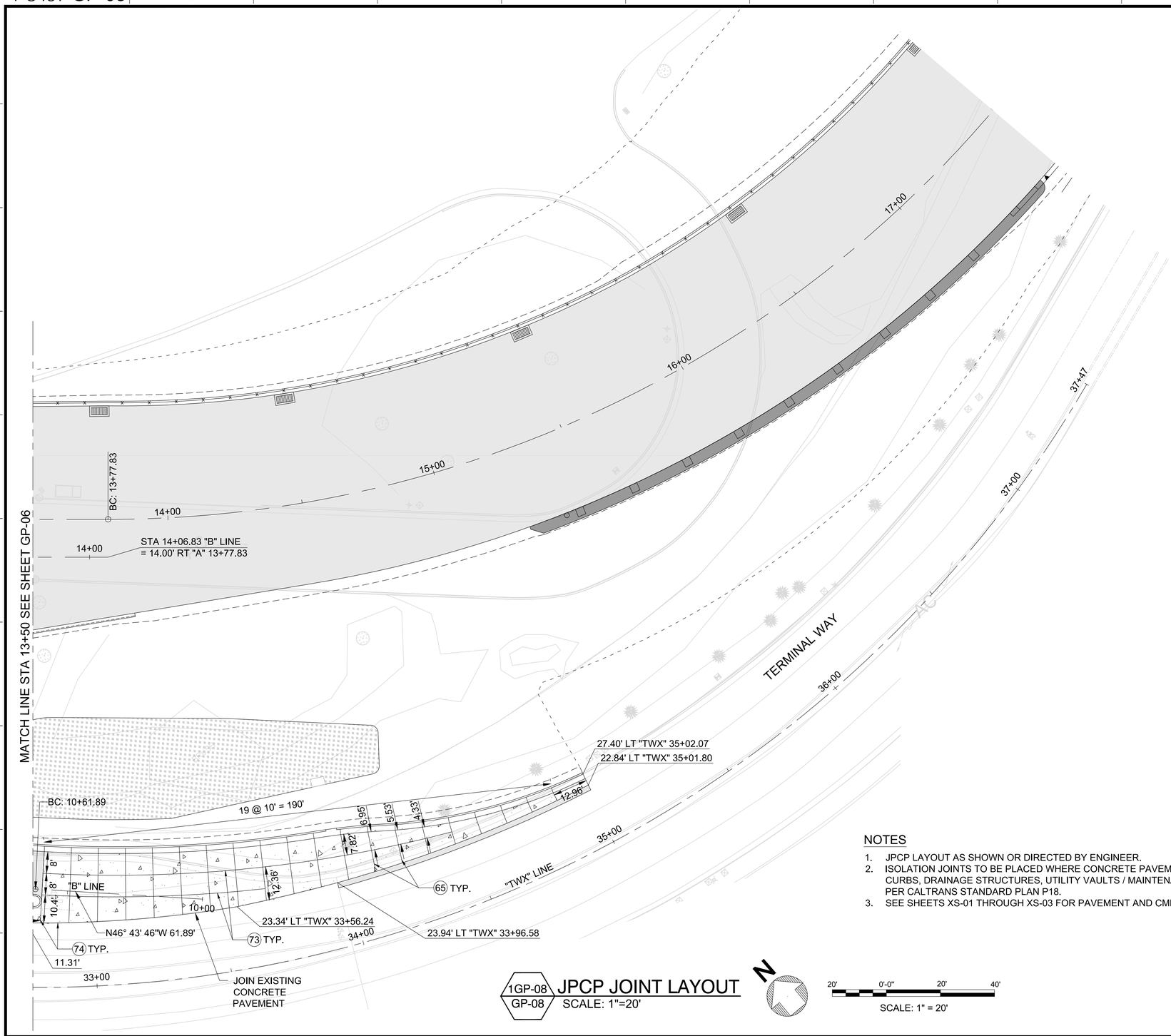

NOTES

1. JPCP LAYOUT AS SHOWN OR DIRECTED BY ENGINEER.
2. ISOLATION JOINTS TO BE PLACED WHERE CONCRETE PAVEMENT ABUTS EXISTING PAVEMENT, PROPOSED CURBS, DRAINAGE STRUCTURES, UTILITY VAULTS / MAINTENANCE HOLES, AND LIGHT POLE FOUNDATIONS PER CALTRANS STANDARD PLAN P18.
3. SEE SHEETS XS-01 THROUGH XS-03 FOR PAVEMENT AND CMB THICKNESS.

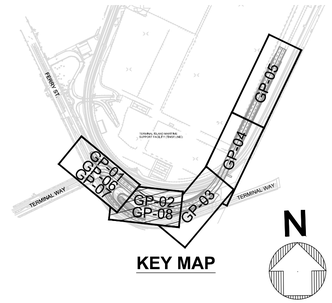

KEY MAP

1GP-08 / GP-08 JPCP JOINT LAYOUT
SCALE: 1"=20'

N

20' 0'-0" 20' 40'
SCALE: 1" = 20'

SHEET ____ OF 400

NO.	DATE	DRAWN	REVISIONS -	CHK'D	APP'D
			NOT FOR CONSTRUCTION		

NO.	DATE	DRAWN	REVISIONS -	CHK'D	APP'D
			80% DESIGN		

Jacobs
2600 MICHELSON DRIVE, SUITE 500
IRVINE, CA 92612
T: (949) 224-7500
F: (949) 224-7501

SCALE:	1"=20'
DRAWN:	T. ALSAQABI
CHECKED:	A. BENCINI
DESIGNED:	J. HANNA
	ENGINEER / ARCHITECT

TERMINAL ISLAND GRADE SEPARATION

JOINTING PLAN - 2

THE PORT OF LOS ANGELES
ENGINEERING DIVISION
425 S. PALOS VERDES STREET SAN PEDRO CA 90731-3309

DRAWING NUMBER	SHEET NUMBER
1-3497	GP-08

GENERAL STORM DRAIN NOTES:

1. ELEVATIONS ARE REFERENCED TO MEAN LOWER LOW WATER (MLLW) AS ELEVATION 0.00.
2. MAINTAIN SAFE CONSTRUCTION EXCAVATION SLOPES AND SHORING AND COMPLY WITH CAL OSHA AND OTHER APPLICABLE SAFETY REGULATIONS. SOIL CONDITIONS AND COMMENTS ON SHORING ARE CONTAINED IN THE SOILS REPORT OF PROJECT SITE WHICH IS AVAILABLE FOR REVIEW IN THE CHIEF HARBOR ENGINEER'S OFFICE.
3. COMPLETE WORK CALLED FOR ON DRAWINGS, UNLESS OTHERWISE INDICATED OR IDENTIFIED AS NOT IN CONTRACT (NIC). COORDINATE WORK OUTSIDE OF PROJECT SITE LIMITS OR IN BLOCKED OUT AREAS WITH OTHER CONTRACTORS AND/OR TERMINAL OPERATORS.
4. COORDINATES ARE GIVEN IN NAD83, ZONE 5, CALIFORNIA STATE PLANE COORDINATES.
5. REINFORCED CONCRETE PIPE SHALL HAVE A MAXIMUM WATER/CEMENT RATIO OF 0.40. PER ASTM C497 TEST METHOD A, RCP SHALL HAVE A MAXIMUM ABSORPTION OF 6%.
6. RCP SHALL HAVE A MINIMUM INSIDE AND OUTSIDE CONCRETE COVER OF 1-1/2 INCHES.
7. JOINTS SHALL BE RUBBER-GASKETED. MAXIMUM JOINT GAP SHALL BE PER MANUFACTURER'S WRITTEN INSTRUCTIONS.
8. PIPE BEDDING SHALL CONFORM TO CITY OF LOS ANGELES, DEPARTMENT OF PUBLIC WORKS, BUREAU OF ENGINEERING STANDARD PLAN S-251-1.
9. GROUNDWATER TABLE VARIES ON PROJECT SITE BASED ON SEASONAL AND TIDAL CONDITIONS. THE DESIGN GROUNDWATER ELEVATION IS 4.4 FT, MLLW.
10. PVC PLASTIC PIPE FOR STORM DRAINS SHALL BE SCHEDULE 80 DWV WITH SOLVENT WELD JOINTS IN CONFORMANCE WITH RS SUBSECTION 207-17.
11. INDICATE WITH PERMANENT PAINT ON THE INSIDE SPRINGLINE OF ONE END OF EACH SECTION OF RCP THE DATE OF INSTALLATION.
12. LOCATIONS OF EXISTING SUBSTRUCTURES ARE APPROXIMATE ONLY; EXECUTE EXCAVATION WITH EXTRA CARE TO PREVENT DAMAGE TO EXISTING INSTALLATIONS. POTHOLE, IN COORDINATION WITH CORRESPONDING OWNERS, FOR ANY EXISTING SUBSTRUCTURE INSTALLATIONS TO DETERMINE THEIR EXACT LOCATIONS AND ELEVATIONS PRIOR TO EXCAVATION.
13. ANY DISCREPANCY BETWEEN DRAWINGS AND FIELD CONDITIONS SHALL BE BROUGHT TO THE ATTENTION OF ENGINEER FOR CLARIFICATION BY CONTRACTOR.
14. INSTALL GREEN DETECTION TAPE ABOVE INSTALLED STORM DRAINPIPE PER SPECIFICATIONS.
15. WHERE PHASING LEAVES UNFINISHED STORM DRAIN LINES OR TRENCH DRAINS, PROVIDE SANDBAGS AT THE END OF PIPES AND TRENCH DRAINS FOR A TEMPORARY CAP AND EROSION CONTROL BETWEEN PHASES.
16. JOIN LOCATIONS ON DRAWINGS ARE BASED ON AVAILABLE RECORDS. DETERMINE "AS-BUILT" CONDITIONS BY EXPOSING JOIN LOCATION. PIPE LAYOUT SHALL BE ADJUSTED TO ACCOMMODATE EXISTING CONDITIONS.
17. IF PIPE JOINT IS DAMAGED DURING DEMOLITION ACTIVITY, CONTRACTOR SHALL REMOVE ADDITIONAL PIPE UNTIL AN UNDAMAGED JOINT IS OBTAINED.
18. STORM DRAIN INLETS, CATCH BASINS, AND MAINTENANCE HOLES SHALL BE ADJUSTED TO BE FLUSH WITH FINISHED SURFACE.
19. INSTALL STENCILS AT INLETS & CATCH BASINS PER APPROVED CITY OF LOS ANGELES STD STENCIL.
20. DETERMINE THE MEANS AND METHODS TO INSTALL STORM DRAINS AND APPURTENANT DRAINAGE SYSTEMS IN THE WET. DEVELOP AND SUBMIT WORKING DRAWINGS SIGNED AND STAMPED BY A REGISTERED ENGINEER IN CALIFORNIA SHOWING THE MEANS AND METHODS OF CONSTRUCTING STORM DRAIN SYSTEMS IN THE WET. SEE SPECIFICATIONS SECTION FOR DEWATERING.
21. CALL UNDERGROUND SERVICE ALERT (USA) DIG ALERT AT 1-800-227-2600 OR 811 TO IDENTIFY THE LOCATIONS OF UNDERGROUND UTILITIES THREE (3) DAYS PRIOR TO THE START OF WORK.
22. REPLACE EXISTING PAVEMENT SECTION WHERE PROPOSED STORM DRAIN SYSTEM JOINS EXISTING STORM DRAIN SYSTEM OUTSIDE PROJECT SITE LIMITS.
23. HDPE PIPE TO CONCRETE STRUCTURE CONNECTIONS SHALL BE DONE USING FLEX RESTRAINT FITTINGS BY CENTRAL PLASTICS.
24. PERFORATED HDPE PIPE SHALL CONFORM TO AASHTO PERFORATIONS CLASS I AND HAVE A MINIMUM DR11.
25. BREAKING INTO EXISTING STORM DRAIN MAINTENANCE HOLES SHALL BE DONE PER APWA STD PLAN 208-3.
26. REINFORCED CONCRETE PIPE TO CATCH BASIN CONNECTIONS SHALL BE DONE PER APWA STD PLAN 308-3.
27. FOR VERTICAL INTERFACES, BUILD BOTH SIDES IN EQUAL LIFTS. IF CONTRACTOR CHOOSES A DIFFERENT METHOD, COSTS INCURRED DUE TO THIS METHOD CHOICE SHALL BE AT THE SOLE COST AND EXPENSE OF CONTRACTOR.
28. REFER TO LANDSCAPE PLANTING SHEETS LP-00 - LP-09 FOR PLANTING DETAIL INSIDE BIORETENTION BASIN.

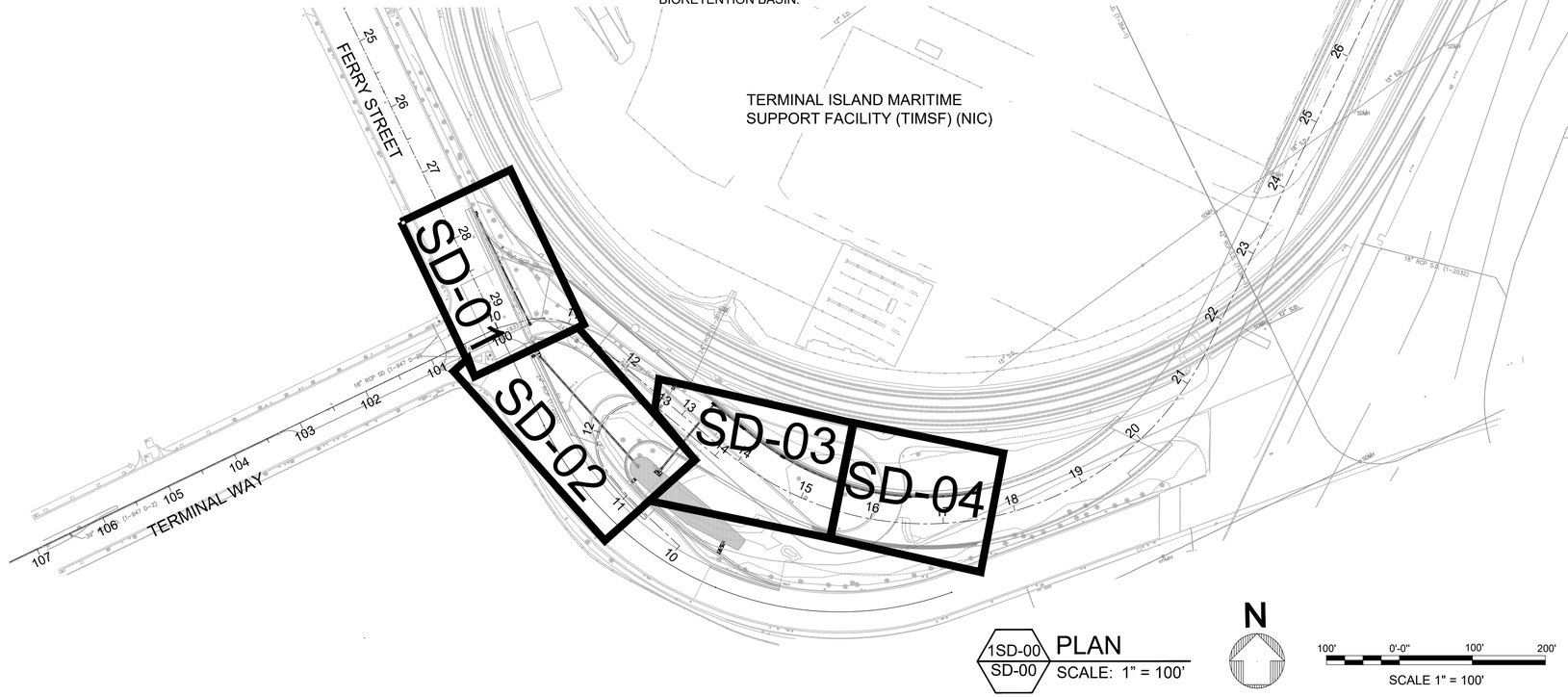

1SD-00 / SD-00 PLAN
SCALE: 1" = 100'

N

100' 0'-0" 100' 200'
SCALE 1" = 100'

CONSTRUCTION NOTES

LEGEND OF CONSTRUCTION NOTES			
COORDINATE			
CONSTRUCT		REMODEL EXISTING	
EXISTING		REMOVE & CONSTRUCT	
REMOVE		RELOCATE	
NOT IN CONTRACT (NIC)		ABANDON	

No.	CONSTRUCTION ITEM	REFERENCE DWG
79	REINFORCED CONCRETE PIPE (RCP)	
82	JUNCTION STRUCTURE (JS)	LA BOE S-300-1
85	STORM DRAIN MAINT HOLE	LA BOE S-381 "MH EZ"
96	SEAL WITH 8" BRICK & MORTAR	
99	SIDE OPENING CATCH BASIN	LA BOE S-351-1
103	POLYVINYL CHLORIDE (PVC) PIPE	
104	CATCH BASIN GRATE AND FRAME	LAHD H-101-01
105	CONCRETE FLARED END SECTION	CALTRANS D94B
106	ROCK SLOPE PROTECTION	CALTRANS CLASS II
107	BIORETENTION BASIN	
108	OBSERVATION WELL	
109	SUBDRAIN CLEANOUT	

ABBREVIATIONS

BMP	BEST MANAGEMENT PRACTICE
CB	CATCH BASIN
DWP	DEPARTMENT OF WATER AND POWER
EG	EXISTING GRADE
FG	FINISHED GRADE
INV	INVERT
LF	LINEAR FOOT
PVC	POLYVINYL CHLORIDE PIPE
RS	REFERENCE SPECIFICATION
RCP	REINFORCED CONCRETE PIPE
RSP	ROCK SLOPE PROTECTION
SD	STORM DRAIN
SDMH	STORM DRAIN MANHOLE
TYP	TYPICAL

SHEET ____ OF 400

NO.	DATE	DRAWN	REVISIONS -	CHK'D	APP'D
			NOT FOR CONSTRUCTION		

NO.	DATE	DRAWN	REVISIONS -	CHK'D	APP'D
			80% DESIGN		

Jacobs
2600 MICHELSON DRIVE, SUITE 600
IRVINE, CA 92612
T: (949) 224-7500
F: (949) 224-7501

SCALE:	1"=100'
DRAWN:	T. ALSAQABI
CHECKED:	A. BENCINI
DESIGNED:	J. HANNA
	ENGINEER / ARCHITECT

TERMINAL ISLAND GRADE SEPARATION

STORM DRAIN PLAN - KEY MAP

THE PORT OF LOS ANGELES
ENGINEERING DIVISION
425 S. PALOS VERDES STREET SAN PEDRO CA 90731-3309

DRAWING NUMBER: 1-3497
SHEET NUMBER: SD-00

POLAPRO1_04/2023_BWD

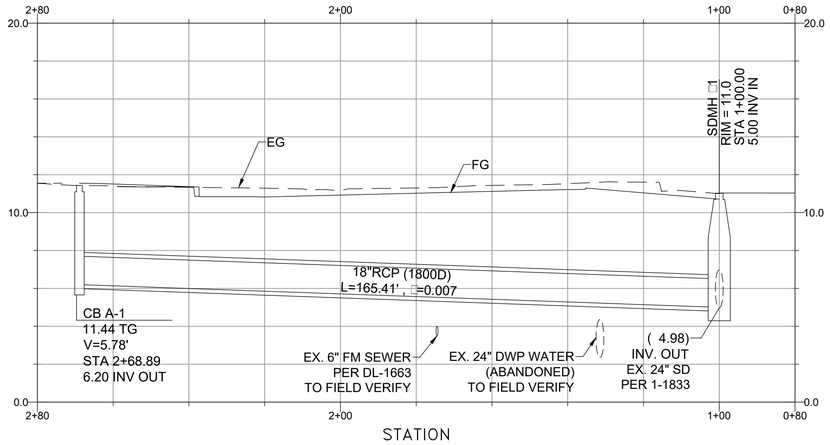

2SD□□
SD□□

PROFILE

HORIZ. SCALE: 1"=20'
VERT. SCALE: 1"=5"

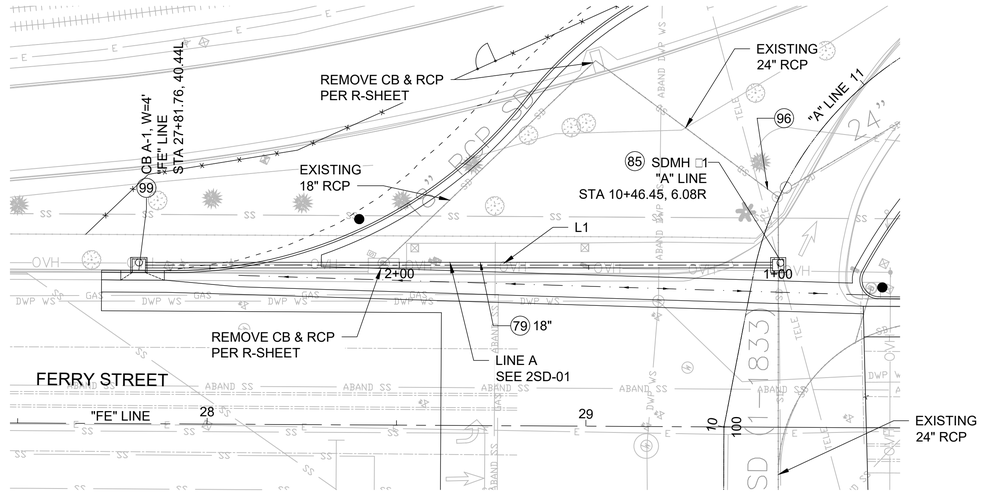

□SD□□
SD□□

PLAN

SCALE: 1"=20'

20' 0'-0" 20' 40'

SCALE: 1" = 20'

CONSTRUCTION NOTES

LEGEND OF CONSTRUCTION NOTES	
COORDINATE	
CONSTRUCT	REMODEL EXISTING
EXISTING	REMOVE & CONSTRUCT
REMOVE	RELOCATE
NOT IN CONTRACT (NIC)	ABANDON

N□.	CONSTRUCTION ITEM	REFERENCE DWG
79	REINFORCED CONCRETE PIPE (RCP)	
82	□UNCTION STRUCTURE (□S)	LA BOE S-300-1
85	STORM DRAIN MAINT HOLE	LA BOE S-381 "MH EZ"
96	SEAL WITH 8" BRICK & MORTAR	
99	SIDE OPENING CATCH BASIN	LA BOE S-351-1
103	POLYVINYL CHLORIDE (PVC) PIPE	
104	CATCH BASIN GRATE AND FRAME	LAHD H-101-01
105	CONCRETE FLARED END SECTION	CALTRANS D94B
106	ROCK SLOPE PROTECTION	CALTRANS CLASS II
107	BIORETENTION BASIN	
108	OBSERVATION WELL	
109	SUBDRAIN CLEANOUT	

NOTES

1. EXACT LOCATION AND SIZE OF EXISTING UTILITIES TO BE FIELD VERIFIED.

#	BEARING
L1	N25° 56' 00"W

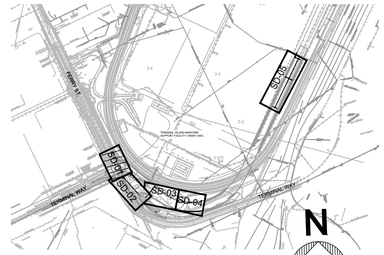

KEY MAP

SHEET ---- OF 400

NO.	DATE	DRAWN	REVISIONS -	CHK'D	APP'D
			NOT FOR CONSTRUCTION		

NO.	DATE	DRAWN	REVISIONS -	CHK'D	APP'D
			80% DESIGN		

Jacobs
3600 MICHELSON DRIVE, SUITE 500
IRVINE, CA 92612
T: (949) 224-7500
F: (949) 224-7501

SCALE:	1"=20'
DRAWN:	T. ALSA□ABI
CHECKED:	A. BENCINI
DESIGNED:	□ HANNA
	ENGINEER / ARCHITECT

TERMINAL ISLAND GRADE SEPARATION

STORM DRAIN PLAN & PROFILE - 1

THE PORT OF LOS ANGELES
ENGINEERING DIVISION
425 S. PALOS VERDES STREET SAN PEDRO CA 90731-3309

DRAWING NUMBER	SHEET NUMBER
1-3497	SD-01

POLAPRO1_04/2023_BWD

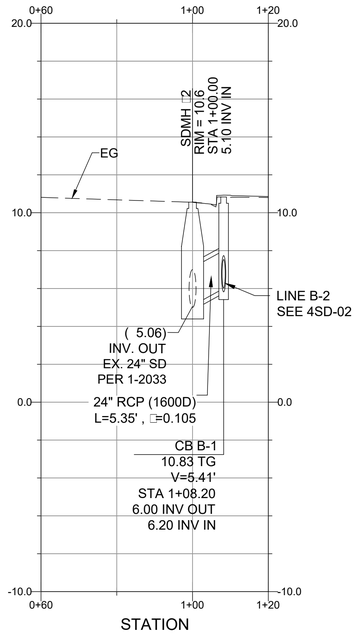

2SD□02 / SD□02 **PROFILE**
HORIZ. SCALE: 1"=20'
VERT. SCALE: 1"=5"

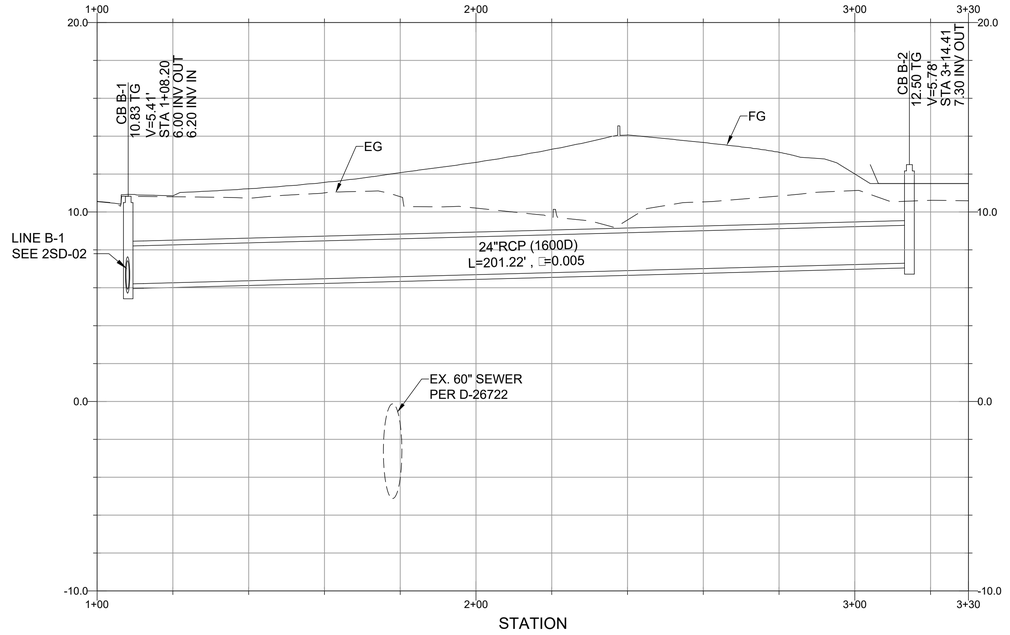

□SD□02 / SD□02 **PROFILE**
HORIZ. SCALE: 1"=20'
VERT. SCALE: 1"=5"

CONSTRUCTION NOTES

LEGEND OF CONSTRUCTION NOTES

- COORDINATE
- CONSTRUCT
- EXISTING
- REMOVE
- NOT IN CONTRACT (NIC)
- REMODEL EXISTING
- REMOVE & CONSTRUCT
- RELOCATE
- ABANDON

N□	CONSTRUCTION ITEM	REFERENCE DWG
79	REINFORCED CONCRETE PIPE (RCP)	
82	□UNCTION STRUCTURE (□S)	LA BOE S-300-1
85	STORM DRAIN MAINT HOLE	LA BOE S-381 "MH EZ"
96	SEAL WITH 8" BRICK & MORTAR	
99	SIDE OPENING CATCH BASIN	LA BOE S-351-1
103	POLYVINYL CHLORIDE (PVC) PIPE	
104	CATCH BASIN GRATE AND FRAME	LAHD H-101-01
105	CONCRETE FLARED END SECTION	CALTRANS D94B
106	ROCK SLOPE PROTECTION	CALTRANS CLASS II
107	BIORETENTION BASIN	
108	OBSERVATION WELL	
109	SUBDRAIN CLEANOUT	

NOTES

1. EXACT LOCATION AND SIZE OF EXISTING UTILITIES TO BE FIELD VERIFIED.

#	BEARING
L2	N64 14' 58"E
L3	S41 45' 35"E

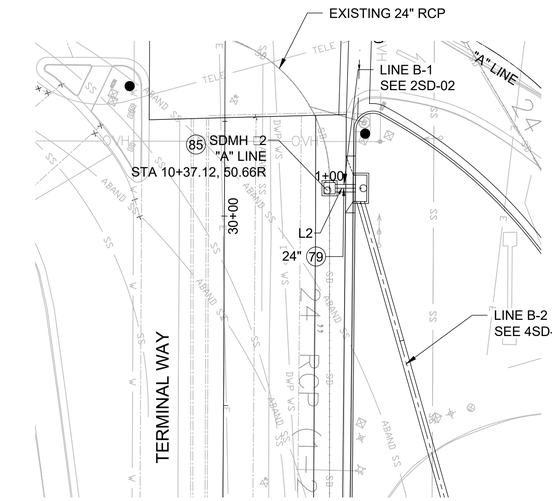

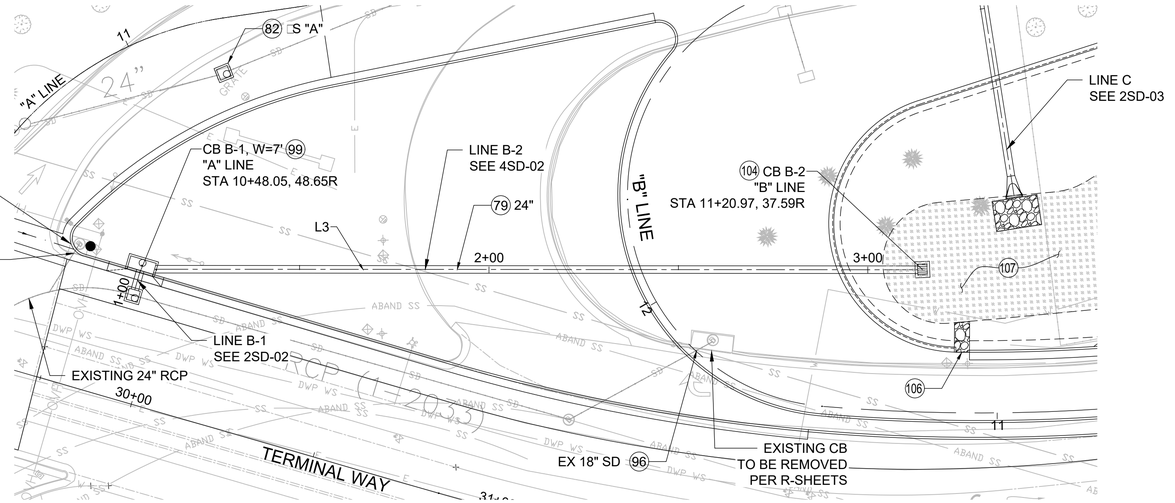

□SD□02 / SD□02 **PLAN**
SCALE: 1"=20'

20' 0'-0" 20' 40'
SCALE: 1" = 20'

□SD□02 / SD□02 **PLAN**
SCALE: 1"=20'

20' 0'-0" 20' 40'
SCALE: 1" = 20'

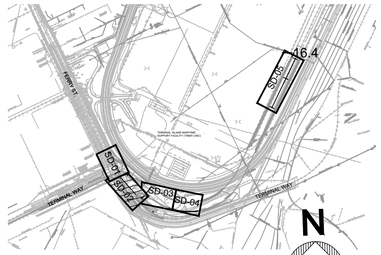

KEY MAP

SHEET ____ OF 400

NO.	DATE	DRAWN	REVISIONS -	CHK'D	APP'D
			NOT FOR CONSTRUCTION		

NO.	DATE	DRAWN	REVISIONS -	CHK'D	APP'D
			80% DESIGN		

Jacobs
2600 MICHELSON DRIVE, SUITE 500
IRVINE, CA 92612
T: (949) 224-7500
F: (949) 224-7501

SCALE:	1"=20'
DRAWN:	T. ALSA□ABI
CHECKED:	A. BENCINI
DESIGNED:	□ HANNA

ENGINEER / ARCHITECT

TERMINAL ISLAND GRADE SEPARATION

STORM DRAIN PLAN & PROFILE - 2

THE PORT OF LOS ANGELES
ENGINEERING DIVISION
425 S. PALOS VERDES STREET SAN PEDRO CA 90731-3309

DRAWING NUMBER: 1-3497
SHEET NUMBER: SD-02

PDLAPROT_04/2023_BWD

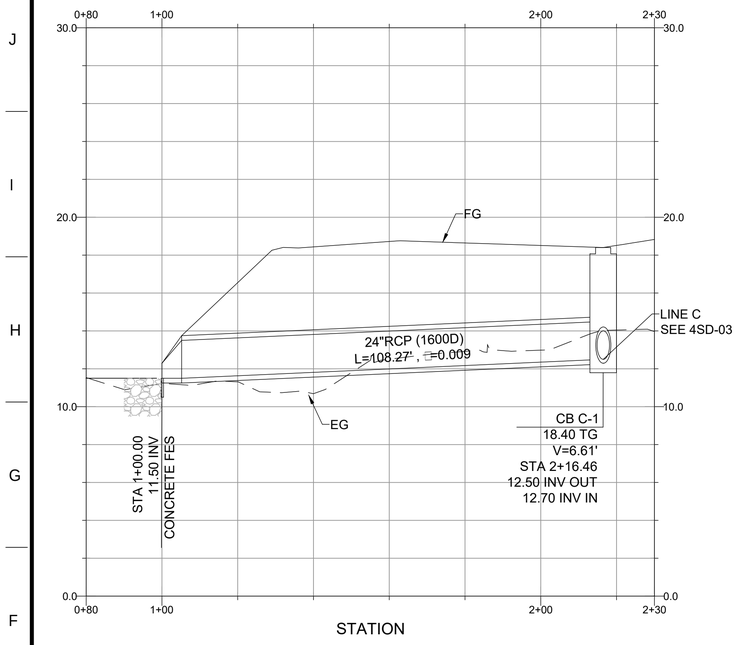

2SD□□ / SD□□ **PROFILE**
HORIZ. SCALE: 1"=20'
VERT. SCALE: 1"=5"

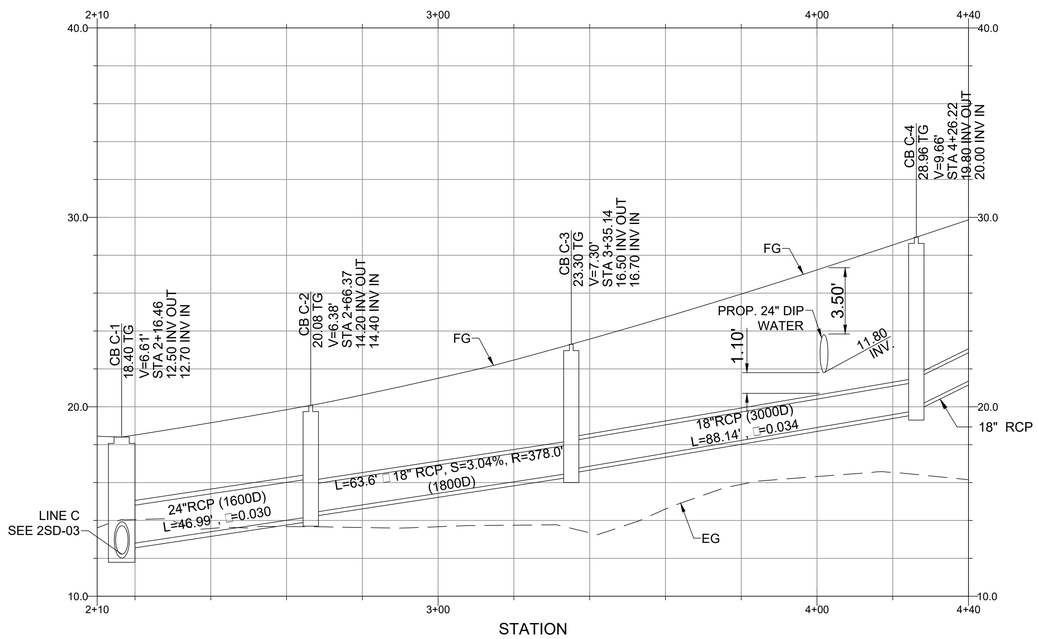

□SD□□ / SD□□ **PROFILE**
HORIZ. SCALE: 1"=20'
VERT. SCALE: 1"=5"

CONSTRUCTION NOTES

LEGEND OF CONSTRUCTION NOTES

COORDINATE	
CONSTRUCT	REMODEL EXISTING
EXISTING	REMOVE & CONSTRUCT
REMOVE	RELOCATE
NOT IN CONTRACT (NIC)	ABANDON

N□.	CONSTRUCTION ITEM	REFERENCE DWG
79	REINFORCED CONCRETE PIPE (RCP)	
82	□UNCTION STRUCTURE (□S)	LA BOE S-300-1
85	STORM DRAIN MAINT HOLE	LA BOE S-381 "MH EZ"
96	SEAL WITH 8" BRICK & MORTAR	
99	SIDE OPENING CATCH BASIN	LA BOE S-351-1
103	POLYVINYL CHLORIDE (PVC) PIPE	
104	CATCH BASIN GRATE AND FRAME	LAHD H-101-01
105	CONCRETE FLARED END SECTION	CALTRANS D94B
106	ROCK SLOPE PROTECTION	CALTRANS CLASS II
107	BIORETENTION BASIN	
108	OBSERVATION WELL	
109	SUBDRAIN CLEANOUT	

NOTES

1. EXACT LOCATION AND SIZE OF EXISTING UTILITIES TO BE FIELD VERIFIED.

#	BEARING
L4	N39 14' 27"E
L5	S50 43' 05"E

C□r□□ □	R□d□□□	L□□□□□	D□□□ ( )	C□□rd D□□□□□□
C□	□□□.□0□	□□□.□0□	22.□□	S 0 2 . "E

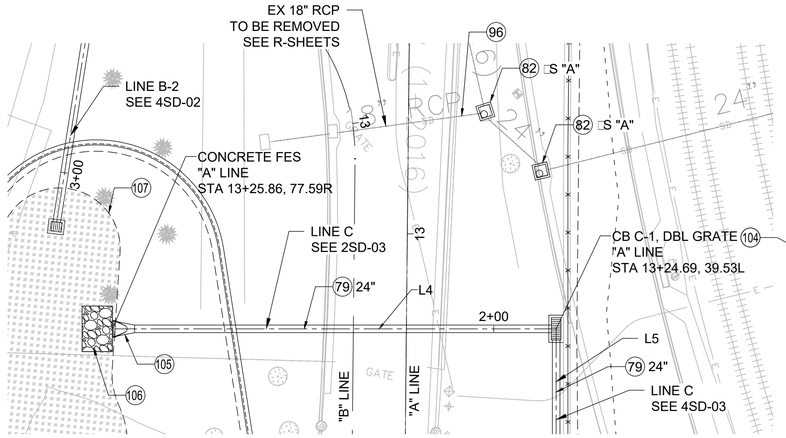

□SD□□ / SD□□ **PLAN**
SCALE: 1"=20'

20' 0'-0" 20' 40'
SCALE: 1" = 20'

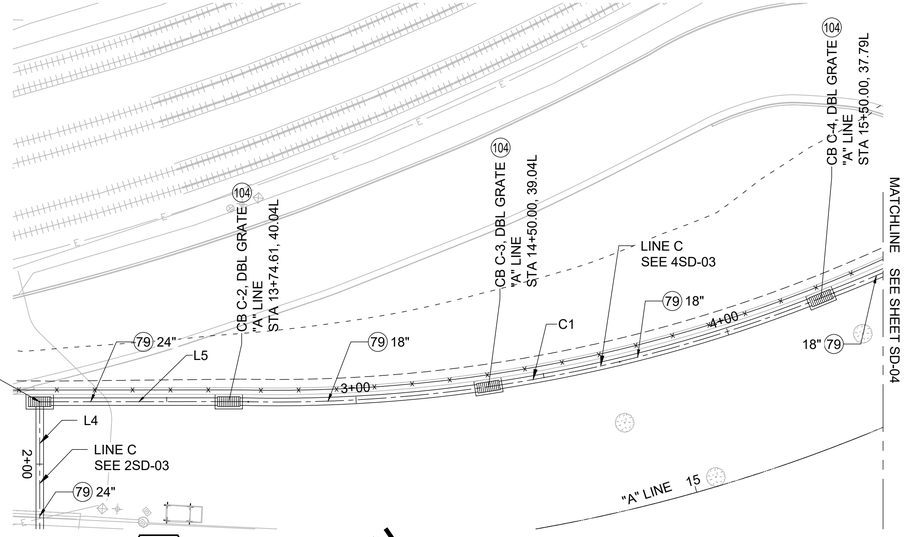

□SD□□ / SD□□ **PLAN**
SCALE: 1"=20'

20' 0'-0" 20' 40'
SCALE: 1" = 20'

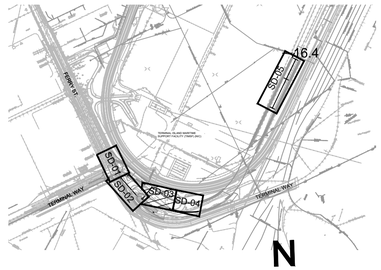

KEY MAP

SHEET ____ OF 400

NO.	DATE	DRAWN	REVISIONS -	CHK'D	APP'D
			NOT FOR CONSTRUCTION		

NO.	DATE	DRAWN	REVISIONS -	CHK'D	APP'D
			80% DESIGN		

Jacobs
2600 MICHELSON DRIVE, SUITE 500
IRVINE, CA 92612
T: (949) 224-7500
F: (949) 224-7501

SCALE:	1"=20'
DRAWN:	T. ALSA□ABI
CHECKED:	A. BENCINI
DESIGNED:	□. HANNA
	ENGINEER / ARCHITECT

TERMINAL ISLAND GRADE SEPARATION

STORM DRAIN PLAN & PROFILE - 3

THE PORT OF LOS ANGELES
ENGINEERING DIVISION
425 S. PALOS VERDES STREET SAN PEDRO CA 90731-3309

DRAWING NUMBER	SHEET NUMBER
1-3497	SD-03

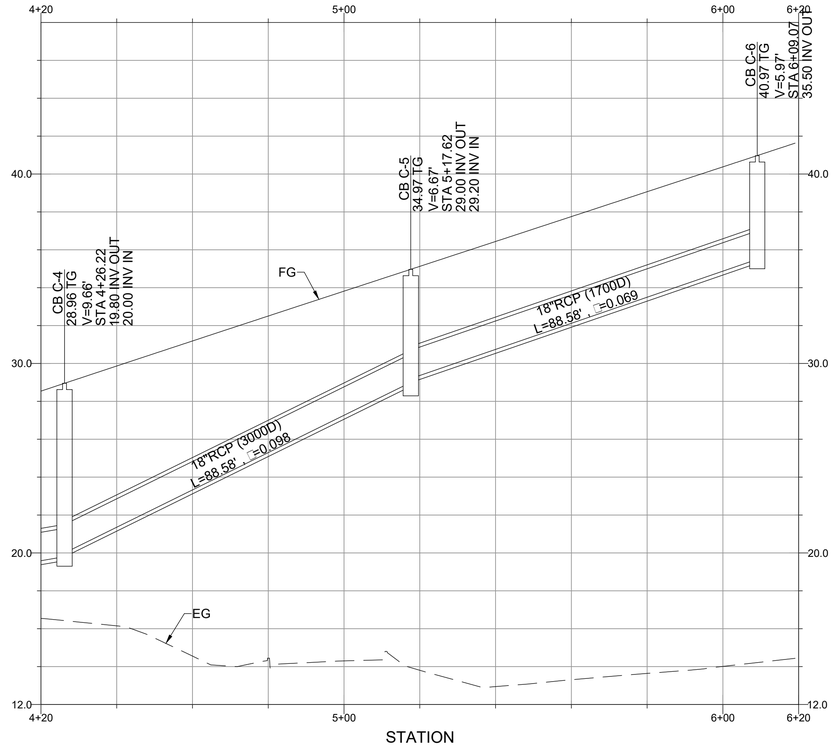

PROFILE

HORIZ. SCALE: 1"=20'
VERT. SCALE: 1"=5"

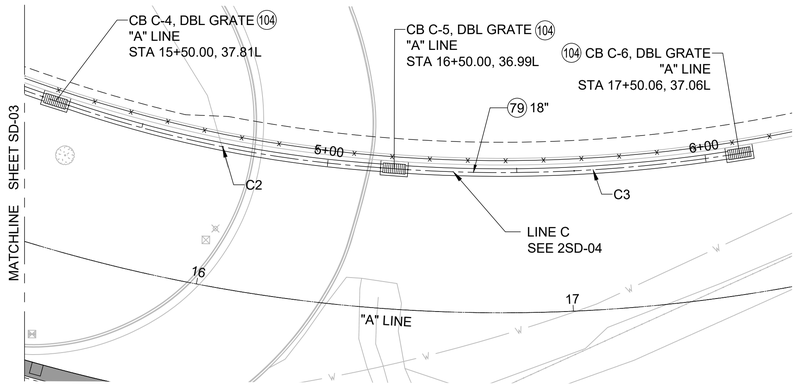

PLAN

SCALE: 1"=20'

20' 0'-0" 20' 40'

SCALE: 1" = 20'

CONSTRUCTION NOTES

LEGEND OF CONSTRUCTION NOTES

- COORDINATE
- CONSTRUCT
- EXISTING
- REMOVE
- NOT IN CONTRACT (NIC)
- REMODEL EXISTING
- REMOVE & CONSTRUCT
- RELOCATE
- ABANDON

NO.	CONSTRUCTION ITEM	REFERENCE DWG
79	REINFORCED CONCRETE PIPE (RCP)	
82	JUNCTION STRUCTURE (JS)	LA BOE S-300-1
85	STORM DRAIN MAINT HOLE	LA BOE S-381 "MH EZ"
96	SEAL WITH 8" BRICK & MORTAR	
99	SIDE OPENING CATCH BASIN	LA BOE S-351-1
103	POLYVINYL CHLORIDE (PVC) PIPE	
104	CATCH BASIN GRATE AND FRAME	LAHD H-101-01
105	CONCRETE FLARED END SECTION	CALTRANS D94B
106	ROCK SLOPE PROTECTION	CALTRANS CLASS II
107	BIORETENTION BASIN	
108	OBSERVATION WELL	
109	SUBDRAIN CLEANOUT	

NOTES

1. EXACT LOCATION AND SIZE OF EXISTING UTILITIES TO BE FIELD VERIFIED.

Curve	Radius	Length	Delta (Central Angle)	Course Direction
C2	2,2	,2	,2	S . 0"E
C	,.00	,2	,2	N 2 . "E

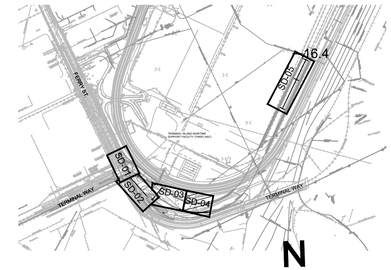

KEY MAP

SHEET ____ OF 400

NO.	DATE	DRAWN	REVISIONS -	CHK'D	APP'D
			NOT FOR CONSTRUCTION		

NO.	DATE	DRAWN	REVISIONS -	CHK'D	APP'D
			80% DESIGN		

Jacobs
2600 MICHELSON DRIVE, SUITE 600
IRVINE, CA 92612
T: (949) 224-7500
F: (949) 224-7501

SCALE: 1"=20'
DRAWN: T. ALSA; ABI
CHECKED: A. BENCINI
DESIGNED: ; HANNA
ENGINEER / ARCHITECT

TERMINAL ISLAND GRADE SEPARATION

STORM DRAIN PLAN & PROFILE - 4

THE PORT OF LOS ANGELES
ENGINEERING DIVISION
425 S. PALOS VERDES STREET SAN PEDRO CA 90731-3309

DRAWING NUMBER: 1-3497
SHEET NUMBER: SD-04

POLAPRO1_04/2023_BWD

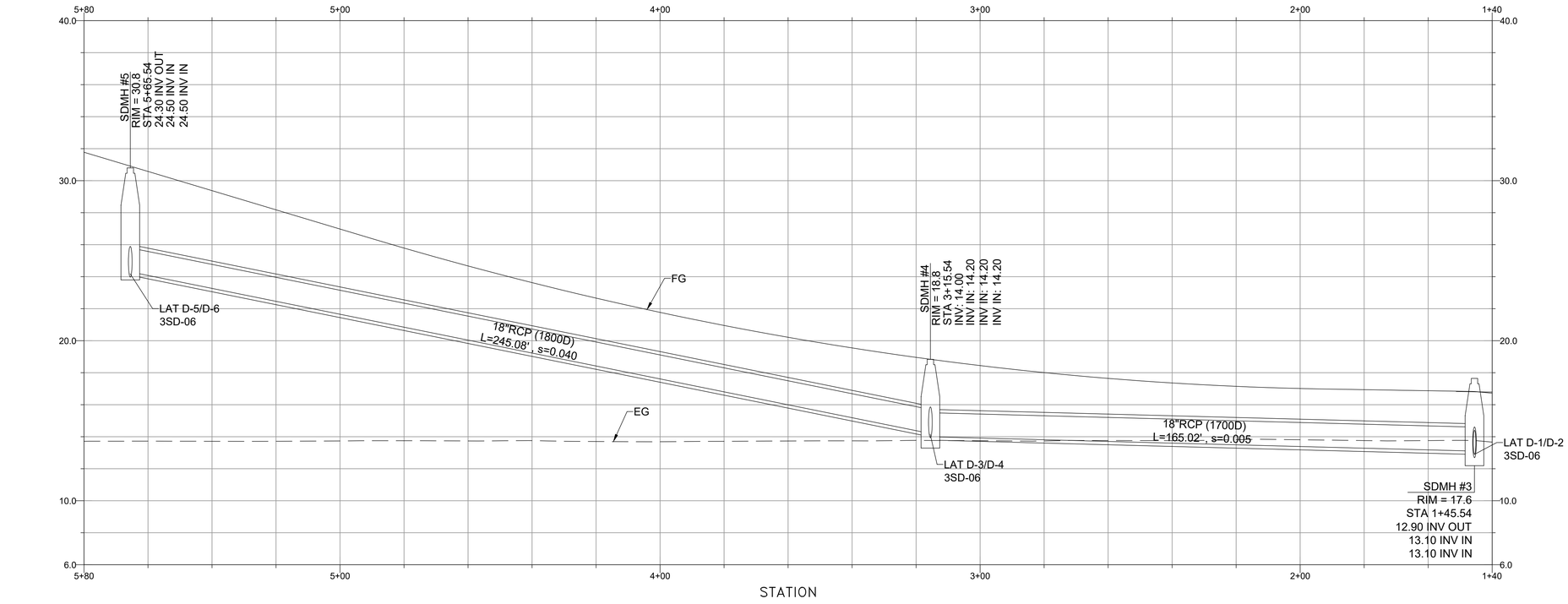

2SD-05 / SD-05 **PROFILE**
HORIZ. SCALE: 1"=20'
VERT. SCALE: 1"=5"

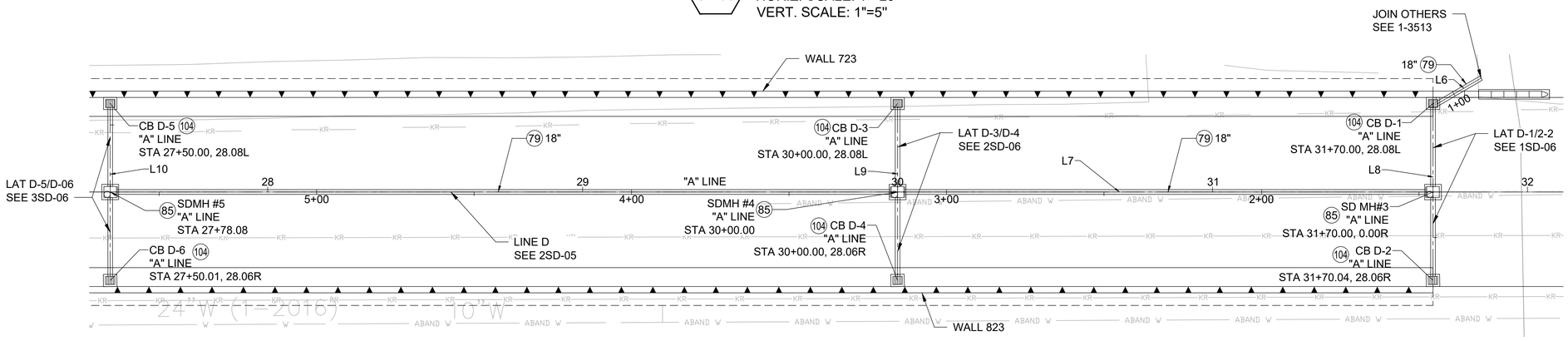

1SD-05 / SD-05 **PLAN**
SCALE: 1"=20'

20' 0'-0" 20' 40'
SCALE: 1" = 20'

CONSTRUCTION NOTES

LEGEND OF CONSTRUCTION NOTES

COORDINATE
CONSTRUCT
EXISTING
REMOVE
NOT IN CONTRACT (NIC)
REMODEL EXISTING
REMOVE & CONSTRUCT
RELOCATE
ABANDON

No.	CONSTRUCTION ITEM	REFERENCE DWG
79	REINFORCED CONCRETE PIPE (RCP)	
82	JUNCTION STRUCTURE (JS)	LA BOE S-300-1
85	STORM DRAIN MAINT HOLE	LA BOE S-381 "MH EZ"
96	SEAL WITH 8" BRICK & MORTAR	
99	SIDE OPENING CATCH BASIN	LA BOE S-351-1
103	POLYVINYL CHLORIDE (PVC) PIPE	
104	CATCH BASIN GRATE AND FRAME	LAHD H-101-01
105	CONCRETE FLARED END SECTION	CALTRANS D94B
106	ROCK SLOPE PROTECTION	CALTRANS CLASS II
107	BIORETENTION BASIN	
108	OBSERVATION WELL	
109	SUBDRAIN CLEANOUT	

NOTES

1. EXACT LOCATION AND SIZE OF EXISTING UTILITIES TO BE FIELD VERIFIED.

#	BEARING
L6	S4° 41' 34"E
L7	S25° 37' 39"W
L8	S64° 22' 44"E
L9	S64° 22' 45"E
L10	S64° 22' 45"E

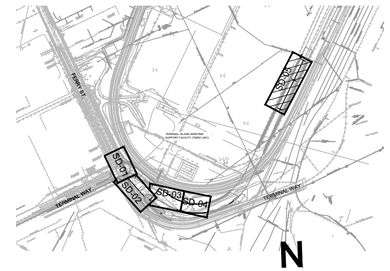

KEY MAP

SHEET ____ OF 400

NO.	DATE	DRAWN	REVISIONS -	CHK'D	APP'D
			NOT FOR CONSTRUCTION		

NO.	DATE	DRAWN	REVISIONS -	CHK'D	APP'D
			80% DESIGN		

Jacobs
3600 MICHELSON DRIVE, SUITE 600
IRVINE, CA 92612
T: (949) 224-7500
F: (949) 224-7501

SCALE: 1"=20'
DRAWN: T. ALSAQABI
CHECKED: A. BENCINI
DESIGNED: J. HANNA
ENGINEER / ARCHITECT

TERMINAL ISLAND GRADE SEPARATION

STORM DRAIN PLAN & PROFILE - 5

THE PORT OF LOS ANGELES
ENGINEERING DIVISION
425 S. PALOS VERDES STREET SAN PEDRO CA 90731-3309

DRAWING NUMBER 1-3497
SHEET NUMBER SD-05

POLAPRO1_04/2023_BWD

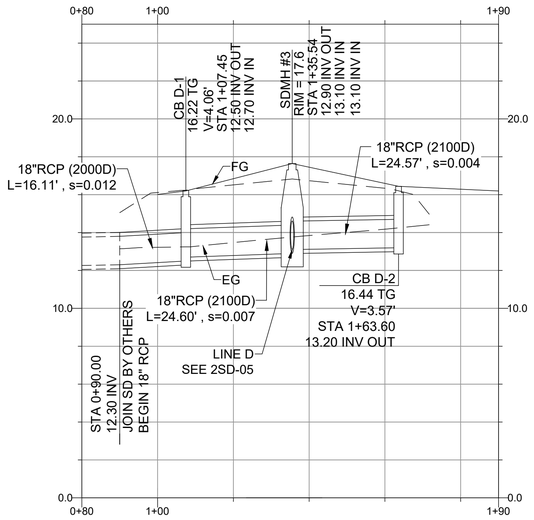

1SD-06 / SD-06 **PROFILE**
HORIZ. SCALE: 1"=20'
VERT. SCALE: 1"=5"

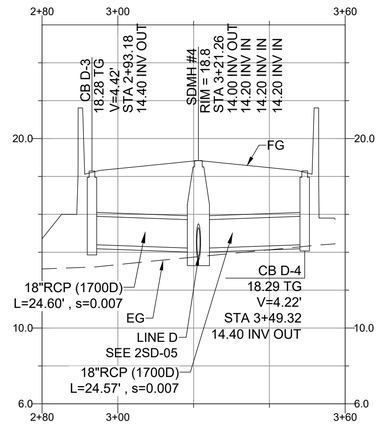

2SD-06 / SD-06 **PROFILE**
HORIZ. SCALE: 1"=20'
VERT. SCALE: 1"=5"

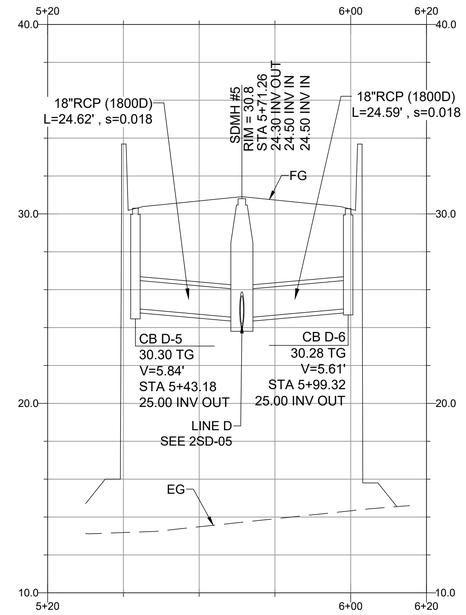

3SD-06 / SD-06 **PROFILE**
HORIZ. SCALE: 1"=20'
VERT. SCALE: 1"=5"

CONSTRUCTION NOTES

LEGEND OF CONSTRUCTION NOTES

COORDINATE
CONSTRUCT
EXISTING
REMOVE
NOT IN CONTRACT (NIC)
REMODEL EXISTING
REMOVE & CONSTRUCT
RELOCATE
ABANDON

No.	CONSTRUCTION ITEM	REFERENCE DWG
79	REINFORCED CONCRETE PIPE (RCP)	
82	JUNCTION STRUCTURE (JS)	LA BOE S-300-1
85	STORM DRAIN MAINT HOLE	LA BOE S-381 "MH EZ"
96	SEAL WITH 8" BRICK & MORTAR	
99	SIDE OPENING CATCH BASIN	LA BOE S-351-1
103	POLYVINYL CHLORIDE (PVC) PIPE	
104	CATCH BASIN GRATE AND FRAME	LAHD H-101-01
105	CONCRETE FLARED END SECTION	CALTRANS D94B
106	ROCK SLOPE PROTECTION	CALTRANS CLASS II
107	BIORETENTION BASIN	
108	OBSERVATION WELL	
109	SUBDRAIN CLEANOUT	

NOTES

1. EXACT LOCATION AND SIZE OF EXISTING UTILITIES TO BE FIELD VERIFIED.

SHEET ____ OF 400

NO.	DATE	DRAWN	REVISIONS -	CHK'D	APP'D
			NOT FOR CONSTRUCTION		

NO.	DATE	DRAWN	REVISIONS -	CHK'D	APP'D
			80% DESIGN		

Jacobs
2600 MICHELSON DRIVE, SUITE 500
IRVINE, CA 92612
T: (949) 224-7500
F: (949) 224-7501

SCALE: 1"=20'
DRAWN: T. ALSAQABI
CHECKED: A. BENCINI
DESIGNED: J. HANNA
ENGINEER / ARCHITECT

TERMINAL ISLAND GRADE SEPARATION

STORM DRAIN PLAN & PROFILE - 6

THE PORT OF LOS ANGELES
ENGINEERING DIVISION
425 S. PALOS VERDES STREET SAN PEDRO CA 90731-3309

DRAWING NUMBER: 1-3497
SHEET NUMBER: SD-06

PDLAPRD1_04/2023_BW7

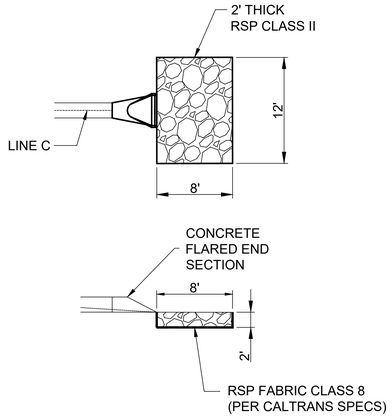

RSP - FLARED END SECTION

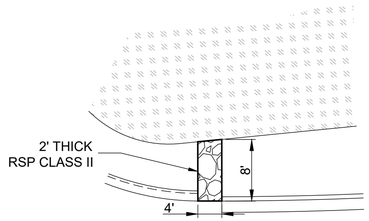

RSP - CURB CUT
AT TERMINAL WAY STA 32+25

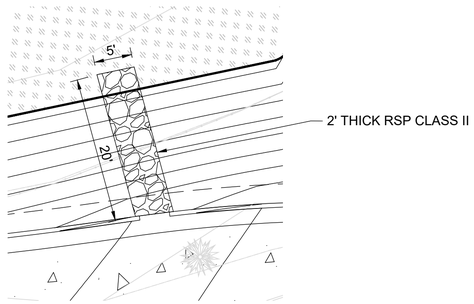

RSP - CURB CUT
AT TERMINAL WAY STA 34+00

NOTES:

1. RSP SHALL BE CONSTRUCTED IN LAYERS AS SHOWN. PLACEMENT SHALL BE METHOD A.
2. RSP THICKNESS SHOWN IS MINIMUM.
3. RSP FABRIC (CLASS 8 PER CALTRANS SPECIFICATION) SHALL BE PROVIDED AT ALL SOIL INTERFACES.
4. SEE CALTRANS SPECS SECTION 72 FOR CLASS SPECIFICATION AND OTHER RELATED ITEMS.

1SD-07 / SD-07 ROCK SLOPE PROTECTION (RSP)
NTS

SHEET ____ OF 400

NO.	DATE	DRAWN	REVISIONS -	CHK'D	APP'D
			NOT FOR CONSTRUCTION		

NO.	DATE	DRAWN	REVISIONS -	CHK'D	APP'D
			80% DESIGN		

Jacobs
2600 MICHELSON DRIVE, SUITE 500
IRVINE, CA 92612
T: (949) 224-7500
F: (949) 224-7501

SCALE: 1"=20'
DRAWN: T. ALSAQABI
CHECKED: A. BENCINI
DESIGNED: J. HANNA
ENGINEER / ARCHITECT

TERMINAL ISLAND GRADE SEPARATION

STORM DRAIN DETAILS - 1

THE PORT OF LOS ANGELES
ENGINEERING DIVISION
425 S. PALOS VERDES STREET SAN PEDRO CA 90731-3309

DRAWING NUMBER 1-3497
SHEET NUMBER SD-07

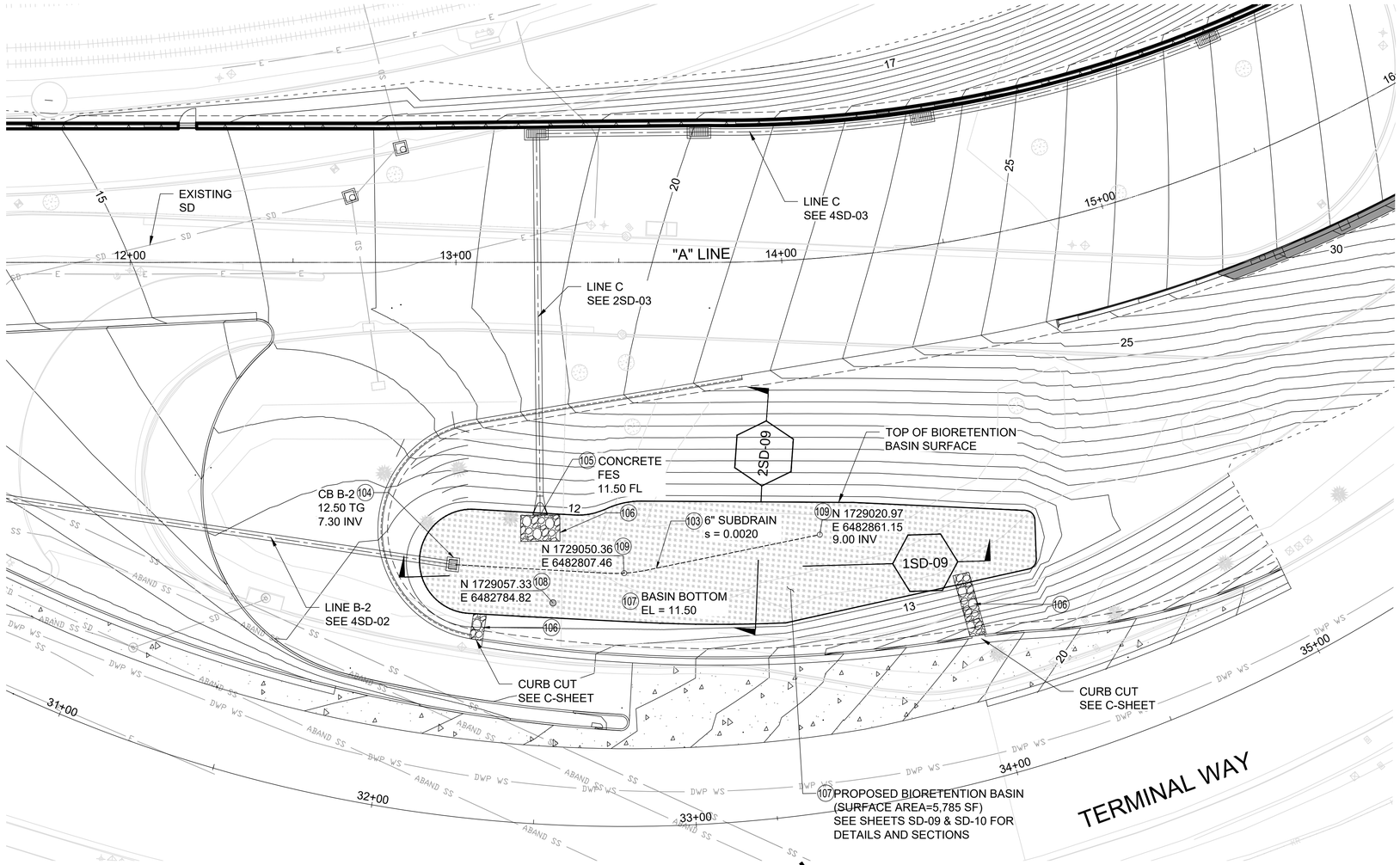

1SD-08 / SD-08 BIORETENTION BASIN BMP
SCALE: 1"=20'

N

20' 0'-0" 20' 40'
SCALE: 1" = 20'

CONSTRUCTION NOTES

LEGEND OF CONSTRUCTION NOTES			
COORDINATE			
CONSTRUCT		REMODEL EXISTING	
EXISTING		REMOVE & CONSTRUCT	
REMOVE		RELOCATE	
NOT IN CONTRACT (NIC)		ABANDON	

No.	CONSTRUCTION ITEM	REFERENCE DWG
79	REINFORCED CONCRETE PIPE (RCP)	
82	JUNCTION STRUCTURE (JS)	LA BOE S-300-1
85	STORM DRAIN MAINT HOLE	LA BOE S-381 "MH EZ"
96	SEAL WITH 8" BRICK & MORTAR	
99	SIDE OPENING CATCH BASIN	LA BOE S-351-1
103	POLYVINYL CHLORIDE (PVC) PIPE	
104	CATCH BASIN GRATE AND FRAME	LAHD H-101-01
105	CONCRETE FLARED END SECTION	CALTRANS D94B
106	ROCK SLOPE PROTECTION	CALTRANS CLASS II
107	BIORETENTION BASIN	
108	OBSERVATION WELL	
109	SUBDRAIN CLEANOUT	

LEGEND

- EXISTING CONTOUR
- MAJOR CONTOUR
- MINOR CONTOUR
- AC PAVEMENT
- CONCRETE SURFACE
- STORMWATER BMP SURFACE

EXISTING UTILITIES NOTE:

THE EXISTING UTILITY LOCATIONS & DEPTHS SHOWN ON THESE PLANS ARE DERIVED FROM FACILITY MAPS AND AS-BUILT DATA. SAID UTILITIES ARE TO BE FIELD LOCATED PRIOR TO CONSTRUCTION AND THE ENGINEER NOTIFIED OF ANY POTENTIAL CONFLICTS.

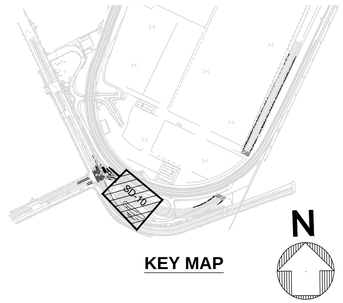

KEY MAP

SHEET ---- OF 400

NO.	DATE	DRAWN	REVISIONS -	CHK'D	APP'D
			NOT FOR CONSTRUCTION		

NO.	DATE	DRAWN	REVISIONS -	CHK'D	APP'D
			80% DESIGN		

Jacobs
2600 MICHELSON DRIVE, SUITE 500
IRVINE, CA 92612
T (949) 224-7500
F (949) 224-7501

SCALE: 1"=20'
DRAWN: T. ALSAQABI
CHECKED: A. BENCINI
DESIGNED: J. HANNA
ENGINEER / ARCHITECT

TERMINAL ISLAND GRADE SEPARATION

STORMWATER BMP LAYOUT

THE PORT OF LOS ANGELES
ENGINEERING DIVISION
425 S. PALOS VERDES STREET SAN PEDRO CA 90731-3309

DRAWING NUMBER: 1-3497
SHEET NUMBER: SD-08

POLAPROT_043020_BWD

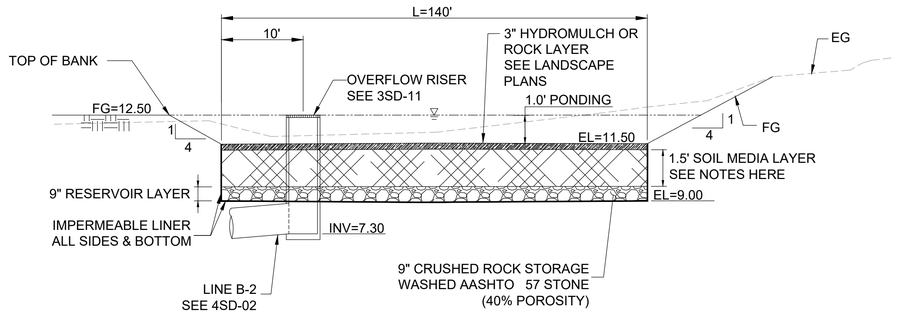

1SD-09 / SD-09 **BIORETENTION BASIN SECTION**
NTS

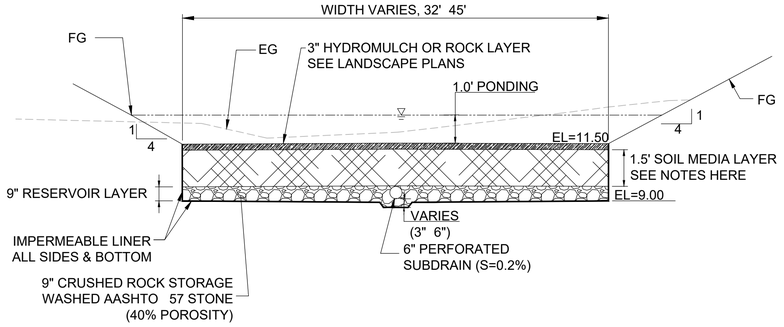

2SD-09 / SD-09 **BIORETENTION BASIN SECTION**
NTS

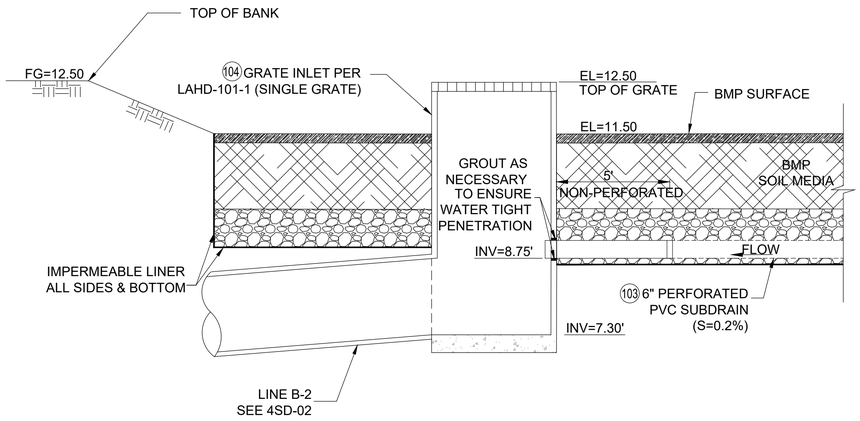

3SD-09 / SD-09 **OVERFLOW RISER CONNECTION**
NTS

NOTES:

1. BIORETENTION SOIL SHALL ACHIEVE A LONG-TERM, IN-PLACE INFILTRATION RATE OF AT LEAST 5 INCHES PER HOUR.
2. THE SOIL MEDIA LAYER SHALL CONSIST OF 60-70% SAND AND 30-40% COMPOST.
3. GRAIN SIZE ANALYSIS RESULTS OF SAND AND COMPOST COMPONENT SHALL BE PERFORMED IN ACCORDANCE WITH ASTM D422, STANDARD TEST METHOD FOR PARTICLE SIZE ANALYSIS OF SOILS.
4. SEE PRO ECT SPECIFICATION FOR BIORETENTION SOIL MEDIA.

SHEET ____ OF 400

NO.	DATE	DRAWN	REVISIONS -	CHK'D	APP'D
			NOT FOR CONSTRUCTION		

NO.	DATE	DRAWN	REVISIONS -	CHK'D	APP'D
			80% DESIGN		

Jacobs
2600 MICHELSON DRIVE, SUITE 500
IRVINE, CA 92612
T: (949) 224-7500
F: (949) 224-7501

SCALE: 1"=20'
DRAWN: T. ALSA ABI
CHECKED: A. BENCINI
DESIGNED: . HANNA
ENGINEER / ARCHITECT

TERMINAL ISLAND GRADE SEPARATION

STORMWATER BMP DETAILS - 1

THE PORT OF LOS ANGELES
ENGINEERING DIVISION
425 S. PALOS VERDES STREET SAN PEDRO CA 90731-3309

DRAWING NUMBER 1-3497
SHEET NUMBER SD-09

POLAPRO1_042023_BWD

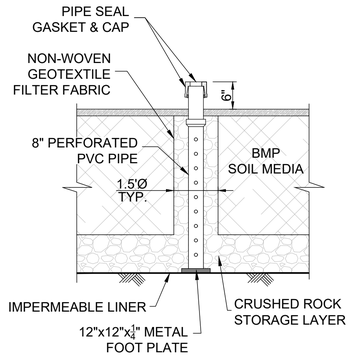

1SD-10 / SD-10 OBSERVATION WELL
NTS

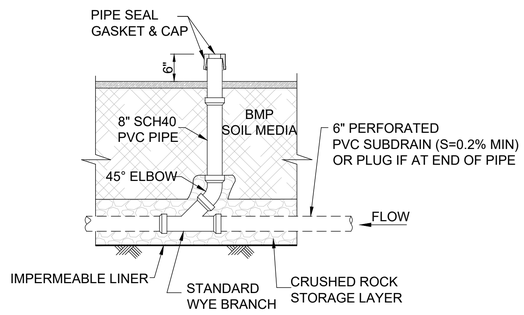

2SD-10 / SD-10 SUBDRAIN CLEANOUT
NTS

SHEET ____ OF 400

NO.	DATE	DRAWN	REVISIONS -	CHK'D	APP'D
			NOT FOR CONSTRUCTION		

NO.	DATE	DRAWN	REVISIONS -	CHK'D	APP'D
			80% DESIGN		

Jacobs
2600 MICHELSON DRIVE, SUITE 500
IRVINE, CA 92612
T: (949) 224-7500
F: (949) 224-7501

SCALE: 1"=20'
DRAWN: T. ALSAQABI
CHECKED: A. BENCINI
DESIGNED: J. HANNA
ENGINEER / ARCHITECT

TERMINAL ISLAND GRADE SEPARATION

STORMWATER BMP DETAILS - 2

THE PORT OF LOS ANGELES
ENGINEERING DIVISION
425 S. PALOS VERDES STREET SAN PEDRO CA 90731-3309

DRAWING NUMBER 1-3497
SHEET NUMBER SD-10

GENERAL STRIPING & FENCING NOTES:

1. TRAFFIC CONTROL SHALL BE IN ACCORDANCE WITH THE LATEST CALIFORNIA MANUAL OF UNIFORM TRAFFIC CONTROL DEVICES (MUTCD WATCH MANUAL). WORK SHALL NOT BEGIN UNTIL TRAFFIC CONTROL PLANS ARE APPROVED BY ENGINEER. PLANS MUST BE STAMPED BY A CALIFORNIA REGISTERED CIVIL AND/OR TRAFFIC ENGINEER.
2. CONSTRUCT AND MAINTAIN TEMPORARY FENCE ALONG PROJECT SITE LIMITS FOR THE DURATION OF CONTRACT.
3. REMOVE TEMPORARY TRAFFIC CONTROL, MARKOUT, AND INSTALL STRIPING, PAVEMENT MARKINGS, CURB MARKINGS, AND SIGNS AS SHOWN ON DRAWINGS. REMOVAL OF MARKINGS SHALL BE PERFORMED BEFORE MARKOUT AND INSTALLATION OF NEW STRIPING BY SANDBLASTING/GRINDING IN ACCORDANCE WITH LADOT SPECIFICATION NO. 76-016-10. MARKOUT SHALL BE BY HEAVY PAINT BRUSH MARKINGS OR SPRAY PAINT OVER A PULLED ROPE IN THE RESPECTIVE WHITE OR YELLOW COLORS OF THE PROPOSED STRIPING. STRIPING AND PAVEMENT MARKINGS WITHIN PARKING LOTS AND NEW WATER STREET SHALL BE IN PAINT PER CALTRANS STANDARD SPECIFICATION SECTIONS 84-3 AND 85. STRIPING AND PAVEMENT MARKINGS SHOWN IN B-PERMIT BR-600528 SHEET SP-01 SHALL BE IN HOT APPLIED ALKYD THERMOPLASTIC IN ACCORDANCE WITH LADOT SPECIFICATIONS NOS. 51-005-10 AND 76-012-15.
4. THE INSTALLATION OF THERMOPLASTIC PAINT MAY PROCEED ONLY AFTER INSPECTION AND APPROVAL OF MARKOUT BY ENGINEER. CORRECT ERRORS IN MARKOUT REQUESTED BY ENGINEER. UPON APPROVAL OF MARKOUT, INSTALL THE PAINT, PAVEMENT MARKINGS, (CURB MARKINGS AND SIGNS - AS APPLICABLE) WITHIN THE FOLLOWING THREE POINTS IN TIME AND FOR THE FOLLOWING PURPOSES:
   A. TEN (10) WORKING DAYS IN ADVANCE OF MARKOUT
   B. UPON COMPLETION OF MARKOUT (INCLUDING ANY MARKOUT CORRECTIONS) FOR INSPECTION AND APPROVAL.
   C. UPON COMPLETION OF PAINT STRIPING (INCLUDING ANY PAINT STRIPING CORRECTIONS) FOR INSPECTION AND FINAL STRIPING APPROVAL.
5. DURING PHASES OF CONSTRUCTION, MAINTAIN TEMPORARY RAISED OVERLAY PAVEMENT MARKERS ADJACENT TO ANY TEMPORARY CENTERLINE, MARKOUT CENTERLINE, OR SCAR OF SANDBLASTED CENTERLINE, AS APPLICABLE AS PER LADOT STANDARD PLAN NO. S-453.0.
6. INSTALL CONTINENTAL CROSSWALK(S) PER LADOT STD. DWG. NO. S-481.1.
7. INSTALL SIGN AND POSTS PER LADOT STD. DWG. NO. S-452.0.
8. INSTALL "TOW AWAY" SIGN AS SHOWN ON 2SP-00 AT PARKING LOT ENTRANCE.
9. INSTALL "STOP", "STOP AHEAD", "PED XING", AND "RAILROAD XING" MARKINGSIN ACCORDANCE WITH THE CALIFORNIA MANUAL OF UNIFORM TRAFFIC CONTROL DEVICES.

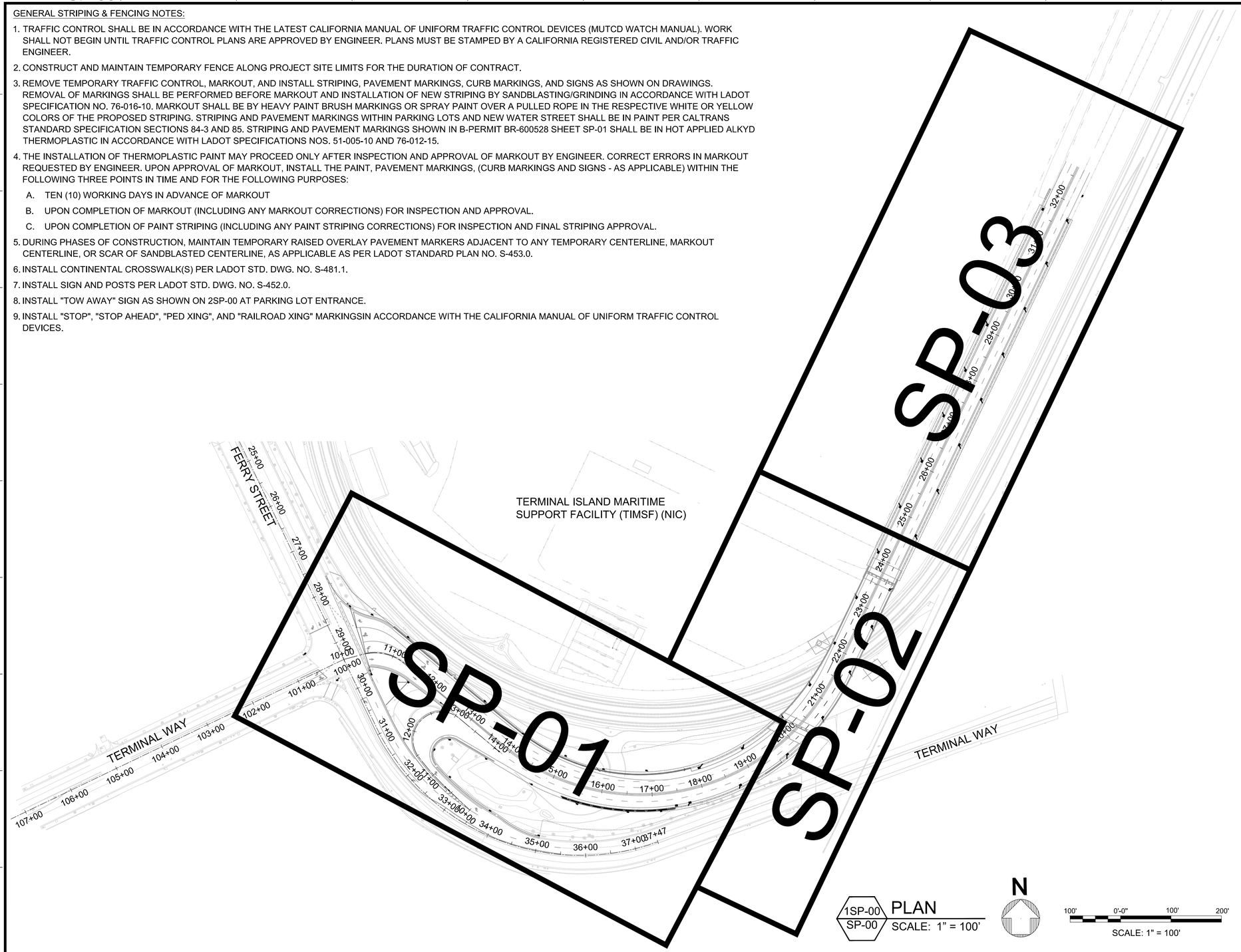

CONSTRUCTION NOTES

LEGEND OF CONSTRUCTION NOTES

COORDINATE	
CONSTRUCT	REMODEL EXISTING
EXISTING	REMOVE & CONSTRUCT
REMOVE	RELOCATE
NOT IN CONTRACT (NIC)	ABANDON

No.	CONSTRUCTION ITEM	REFERENCE DWG
205	12" SOLID WHITE LINE	CALTRANS A24G
218	6" WHITE DASHED LINE	CALTRANS A20A, DETAIL 8
219	6" WHITE SOLID LINE	CALTRANS A20B, DETAIL 27B
221	6" YELLOW SOLID LINE	CALTRANS A20B, DETAIL 24
222	8" WHITE SOLID LINE	CALTRANS A20D, DETAIL 38A
224	ARROW PAVEMENT MARKING	CALTRANS A24A
269	12" WHITE CHEVRON, 8' SPACING (TYP.), 45 DEGREE ANGLE	CALTRANS A20C
271	DOUBLE YELLOW CENTERLINE	CALTRANS A20A, DETAIL 21
272	LANE LINE EXTENSIONS	CALTRANS A20C, DETAIL 37C
273	12" CROSSWALK	CALTRANS A24F

ABBREVIATIONS

EX	EXISTING
LT	LEFT
NIC	NOT IN CONTRACT
RT	RIGHT
ST	STREET
TYP	TYPICAL
VAR	VARIES

LEGEND

- EXISTING STRIPING & MARKINGS TO REMAIN
- PROPOSED STRIPING & MARKINGS
- EXISTING SIGN AND POST
- PROPOSED SIGN AND POST

1SP-00 / SP-00 PLAN
SCALE: 1" = 100'

N

100' 0'-0" 100' 200'
SCALE: 1" = 100'

SHEET ____ OF 400

NO.	DATE	DRAWN	REVISIONS -	CHK'D	APP'D
			NOT FOR CONSTRUCTION		

NO.	DATE	DRAWN	REVISIONS -	CHK'D	APP'D
			80% DESIGN		

Jacobs
2600 MICHELSON DRIVE, SUITE 500
IRVINE, CA 92612
T: (949) 224-7500
F: (949) 224-7501

SCALE:	1"=100'
DRAWN:	G, HUY
CHECKED:	A. BENCINI
DESIGNED:	J. HANNA
	ENGINEER / ARCHITECT

TERMINAL ISLAND GRADE SEPARATION

SIGNAGE & STRIPING PLAN - KEY MAP

THE PORT OF LOS ANGELES
ENGINEERING DIVISION
425 S. PALOS VERDES STREET SAN PEDRO CA 90731-3309

DRAWING NUMBER	SHEET NUMBER
1-3497	SP-00

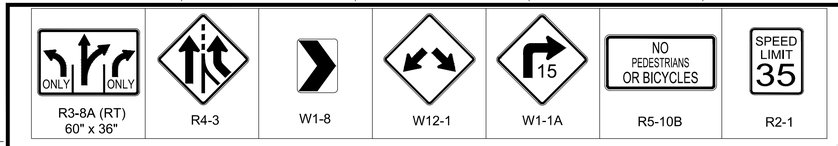

CONSTRUCTION NOTES

LEGEND OF CONSTRUCTION NOTES

- COORDINATE
- CONSTRUCT
- EXISTING
- REMOVE
- NOT IN CONTRACT (NIC)
- REMODEL EXISTING
- REMOVE & CONSTRUCT
- RELOCATE
- ABANDON

No.	CONSTRUCTION ITEM	REFERENCE DWG
205	12" SOLID WHITE LINE	CALTRANS A24G
218	6" WHITE DASHED LINE	CALTRANS A20A, DETAIL 8
219	6" WHITE SOLID LINE	CALTRANS A20B, DETAIL 27B
221	6" YELLOW SOLID LINE	CALTRANS A20B, DETAIL 24
222	8" WHITE SOLID LINE	CALTRANS A20D, DETAIL 38A
224	ARROW PAVEMENT MARKING	CALTRANS A24A
269	12" WHITE CHEVRON, 8' SPACING (TYP.), 45 DEGREE ANGLE	CALTRANS A20C
271	DOUBLE YELLOW CENTERLINE	CALTRANS A20A, DETAIL 21
272	LANE LINE EXTENSIONS	CALTRANS A20C, DETAIL 37C
273	12" CROSSWALK	CALTRANS A24F

LEGEND

- EXISTING STRIPING & MARKINGS TO REMAIN
- PROPOSED STRIPING & MARKINGS
- EXISTING SIGN AND POST
- PROPOSED SIGN AND POST

NOTES

1. MARKOUT AND INSTALL OF STRIPING, PAVEMENT MARKINGS, AND SIGNS SHOWN HEREON. REMOVAL OF MARKINGS SHALL BE PERFORMED BEFORE MARKOUT AND INSTALLATION OF NEW STRIPING AND SHALL BE BY WET SANDBLASTING/GRINDING IN ACCORDANCE WITH LADOT SPECIFICATION NO. 76-.16-10. MARKOUT SHALL BE BY HEAVY PAINT BRUSH OR SPRAY PAINT OVER A PULLED ROPE IN THE RESPECTIVE WHITE AND YELLOW COLORS OF THE PROPOSED STRIPING. FINAL STRIPING AND PAVEMENT MARKINGS SHALL BE IN HOT APPLIED ALKYD THERMOPLASTIC IN ACCORDANCE WITH LADOT SPECIFICATION NOS. 51-005-10 AND 76-012-15.
2. THE INSTALLATION OF THERMOPLASTIC STRIPING MAY PROCEED ONLY AFTER INSPECTION AND APPROVAL OF MARKOUT BY ENGINEER AND LADOT SOUTHERN DISTRICT. CORRECT ERRORS IN MARKOUT REQUESTED BY ENGINEER AND LADOT SOUTHERN DISTRICT. UPON APPROVAL OF MARKOUT THE CONTRACTOR SHALL FULLY INSTALL THE THERMOPLASTIC STRIPING, PAVEMENT MARKINGS, (CURB MARKINGS, AND SIGNS-AS APPLICABLE) WITHIN THE FOLLOWING THREE(3) WORKING DAYS. CONTACT ENGINEER AND LADOT SOUTHERN DISTRICT AT THE FOLLOWING POINTS IN TIME, AND FOR THE FOLLOWING PURPOSES:
   A. TEN (10) WORKING DAYS IN ADVANCE OF MARKOUT.
   B. UPON COMPLETION OF MARKOUT (INCLUDING ANY MARKOUT CORRECTIONS) FOR INSPECTION AND APPROVAL. UPON APPROVAL OF MARKOUT, THE INSTALL THE THERMOPLASTIC STRIPING WITHIN THREE WORKING DAYS.
   C. UPON COMPLETION THERMOPLASTIC STRIPING (INCLUDING ANY THERMOPLASTIC STRIPING CORRECTIONS) FOR INSPECTION AND FINAL STRIPING APPROVAL.
   D. DETAILS CALLED IN DRAWINGS SHALL CONFORM TO CAMUTCD.
3. DURING ALL PHASES OF CONSTRUCTION, TEMPORARY RAISED OVERLAY PAVEMENT MARKERS SHALL BE MAINTAINED ADJACENT TO THE TEMPORARY CENTERLINE MARKOUT CENTERLINE, OR SCAR OF THE SANDBLASTED CENTERLINE, AS APPLICABLE, AS PER LADOT STANDARD PLAN S-453.0.
4. THE FIELD CONDITIONS SHOWN AS EXISTING ON THIS PLAN MAY CHANGE BETWEEN THE PLAN APPROVAL DATE AND THE IMPLEMENTATION DATE. THE CONTRACTOR MAY BE REQUIRED TO INSTALL OR REMOVE STRIPING, PAVEMENT MARKINGS, SIGNS OR OTHER TRAFFIC CONTROL DEVICES BEYOND THAT INDICATED ON THIS PLAN, IN ORDER TO FACILITATE THESE CHANGES IN FIELD CONDITIONS AND /OR TO BE IN COMPLIANCE WITH LADOT STANDARDS AND SPECIFICATIONS IF THIS PLAN HAS NOT BEEN INSTALLED WITHIN TWO (2) YEARS OF THE APPROVAL DATE, IT SHALL BE RESUBMITTED TO ENGINEER AND LADOT SOUTHERN DISTRICT FOR REAPPROVAL PRIOR TO PROCEEDING TO CONSTRUCTION.
5. REPLACEMENT MONUMENT SIGNS, SEE SPECIFICATION.
6. SEE SIGNAL PLAN SHEETS FOR SIGNS LOCATED ON SIGNAL POLES.
7. SEE STREET LIGHTING PLAN SHEETS FOR ALL LIGHTING DETAILS.

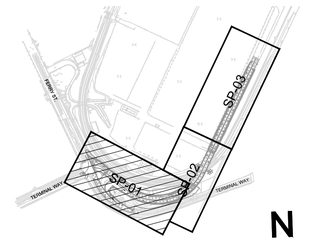

KEY MAP

1SP-01 / SP-01 PLAN SCALE: 1"=40'

N

40' 0'-0" 40' 80'
SCALE: 1" = 40'

SHEET ____ OF 400

NO.	DATE	DRAWN	REVISIONS -	CHK'D	APP'D
			NOT FOR CONSTRUCTION		

NO.	DATE	DRAWN	REVISIONS -	CHK'D	APP'D
			80% DESIGN		

Jacobs
300 N. LAKE AVENUE, SUITE 500
PASADENA, CA 91101
T: (949) 224-7502
F: (949) 224-7501

SCALE: 1"=40"
DRAWN: G. HUY
CHECKED: A. BENCINI
DESIGNED: J. HANNA
ENGINEER / ARCHITECT

TERMINAL ISLAND GRADE SEPARATION

SIGNAGE & STRIPING PLAN - 1

THE PORT OF LOS ANGELES
ENGINEERING DIVISION
425 S. PALOS VERDES STREET SAN PEDRO CA 90731-3309

DRAWING NUMBER 1-3497
SHEET NUMBER SP-01

POLAPR01_040320_BWD

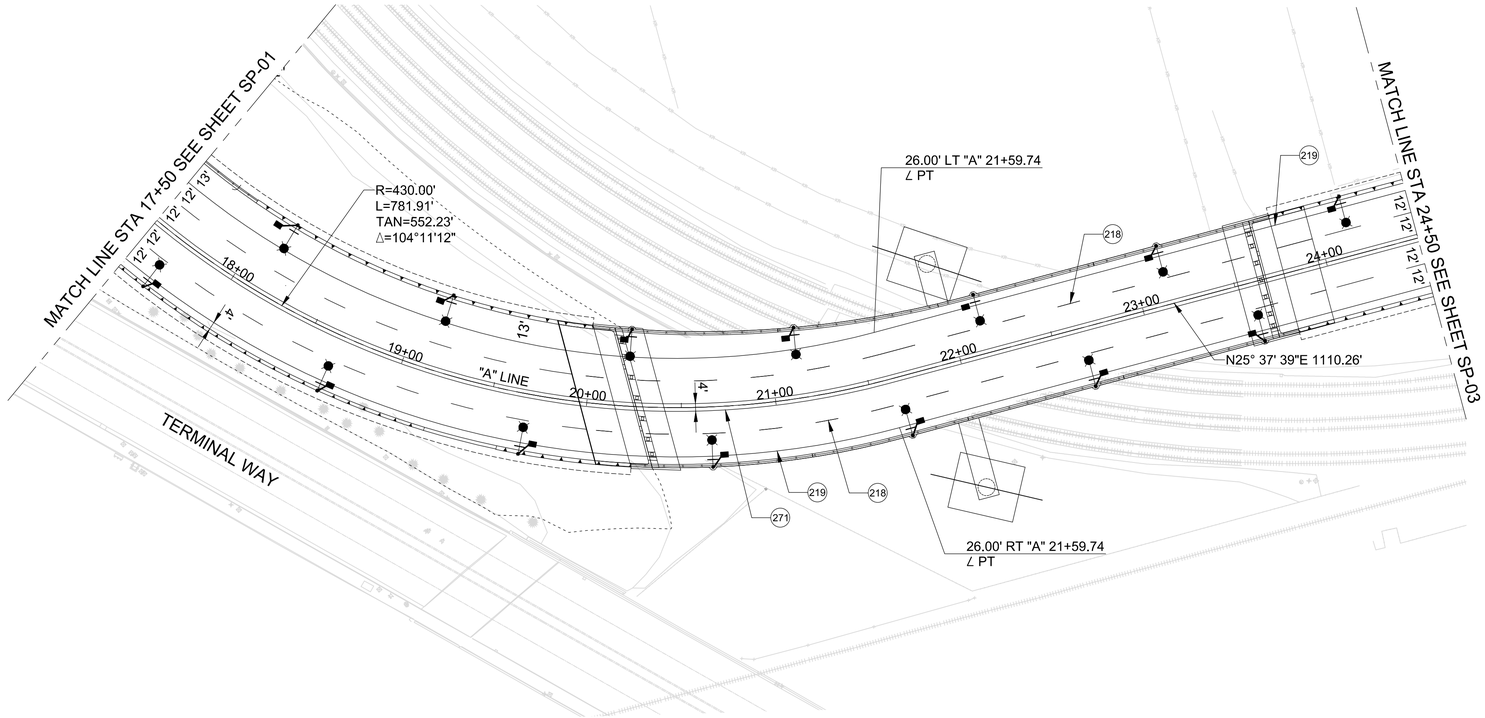

1SP-02 / SP-02 PLAN
SCALE: 1"=40'

N

40' 0'-0" 40' 80'
SCALE: 1" = 40'

CONSTRUCTION NOTES

LEGEND OF CONSTRUCTION NOTES

- COORDINATE
- CONSTRUCT
- EXISTING
- REMOVE
- NOT IN CONTRACT (NIC)
- REMODEL EXISTING
- REMOVE & CONSTRUCT
- RELOCATE
- ABANDON

No.	CONSTRUCTION ITEM	REFERENCE DWG
205	12" SOLID WHITE LINE	CALTRANS A24G
218	6" WHITE DASHED LINE	CALTRANS A20A, DETAIL 8
219	6" WHITE SOLID LINE	CALTRANS A20B, DETAIL 27B
221	6" YELLOW SOLID LINE	CALTRANS A20B, DETAIL 24
222	8" WHITE SOLID LINE	CALTRANS A20D, DETAIL 38A
224	ARROW PAVEMENT MARKING	CALTRANS A24A
269	12" WHITE CHEVRON, 8' SPACING (TYP.), 45 DEGREE ANGLE	CALTRANS A20C
271	DOUBLE YELLOW CENTERLINE	CALTRANS A20A, DETAIL 21
272	LANE LINE EXTENSIONS	CALTRANS A20C, DETAIL 37C
273	12" CROSSWALK	CALTRANS A24F

LEGEND

- EXISTING STRIPING & MARKINGS TO REMAIN
- PROPOSED STRIPING & MARKINGS
- EXISTING SIGN AND POST
- PROPOSED SIGN AND POST

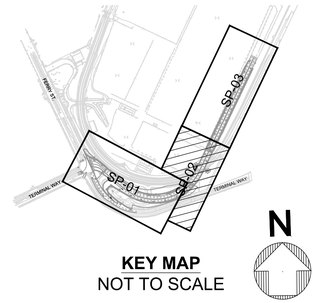

KEY MAP
NOT TO SCALE

N

SHEET ____ OF 400

NO.	DATE	DRAWN	REVISIONS -	CHK'D	APP'D
			NOT FOR CONSTRUCTION		

NO.	DATE	DRAWN	REVISIONS -	CHK'D	APP'D
			80% DESIGN		

Jacobs
3200 MICHELSON DRIVE, SUITE 500
IRVINE, CA 92612
T: (949) 224-7500
F: (949) 224-7501

SCALE:	1"=40'
DRAWN:	G. HUY
CHECKED:	A. BENCINI
DESIGNED:	J. HANNA
	ENGINEER / ARCHITECT

TERMINAL ISLAND GRADE SEPARATION

SIGNAGE & STRIPING PLAN - 2

THE PORT OF LOS ANGELES
ENGINEERING DIVISION
425 S. PALOS VERDES STREET SAN PEDRO CA 90731-3309

DRAWING NUMBER	SHEET NUMBER
1-3497	SP-02

POLAPRO1_04/2023_BWD

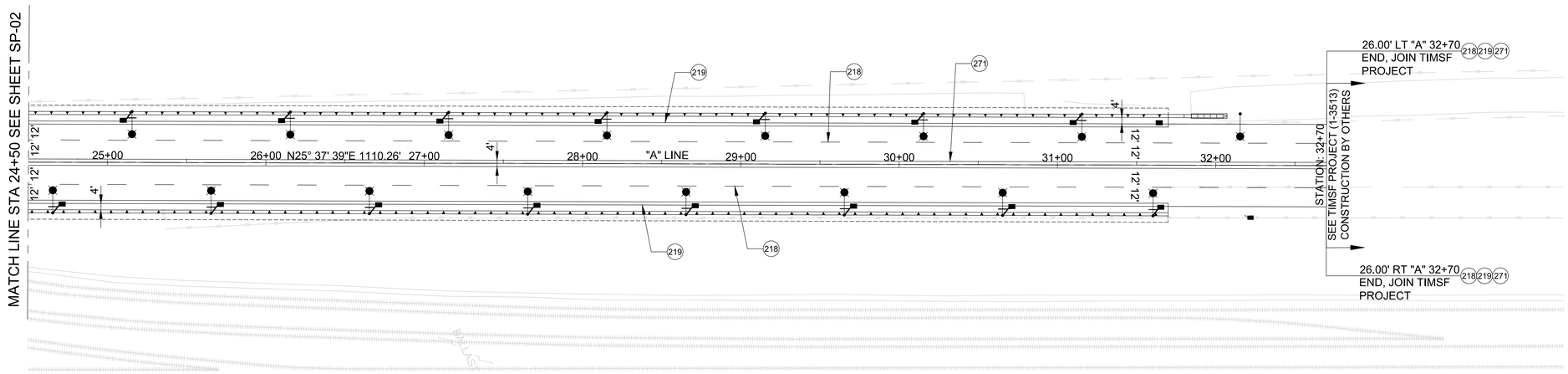

1SP-03 / SP-03 **PLAN**
SCALE: 1"=40'

N

40' 0'-0" 40' 80'
SCALE: 1" = 40'

CONSTRUCTION NOTES

LEGEND OF CONSTRUCTION NOTES

- COORDINATE
- CONSTRUCT
- EXISTING
- REMOVE
- NOT IN CONTRACT (NIC)
- REMODEL EXISTING
- REMOVE & CONSTRUCT
- RELOCATE
- ABANDON

No.	CONSTRUCTION ITEM	REFERENCE DWG
205	12" SOLID WHITE LINE	CALTRANS A24G
218	6" WHITE DASHED LINE	CALTRANS A20A, DETAIL 8
219	6" WHITE SOLID LINE	CALTRANS A20B, DETAIL 27B
221	6" YELLOW SOLID LINE	CALTRANS A20B, DETAIL 24
222	8" WHITE SOLID LINE	CALTRANS A20D, DETAIL 38A
224	ARROW PAVEMENT MARKING	CALTRANS A24A
269	12" WHITE CHEVRON, 8' SPACING (TYP.), 45 DEGREE ANGLE	CALTRANS A20C
271	DOUBLE YELLOW CENTERLINE	CALTRANS A20A, DETAIL 21
272	LANE LINE EXTENSIONS	CALTRANS A20C, DETAIL 37C
273	12" CROSSWALK	CALTRANS A24F

LEGEND

- EXISTING STRIPING & MARKINGS TO REMAIN
- PROPOSED STRIPING & MARKINGS
- EXISTING SIGN AND POST
- PROPOSED SIGN AND POST

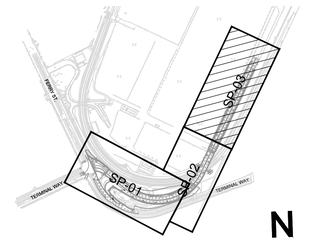

KEY MAP
NOT TO SCALE

SHEET ____ OF 400

NO.	DATE	DRAWN	REVISIONS -	CHK'D	APP'D
			NOT FOR CONSTRUCTION		

NO.	DATE	DRAWN	REVISIONS -	CHK'D	APP'D
			80% DESIGN		

Jacobs
3200 MICHELSON DRIVE, SUITE 500
IRVINE, CA 92612
T: (949) 224-7500
F: (949) 224-7501

SCALE:	1"=40'
DRAWN:	G. HUY
CHECKED:	A. BENCINI
DESIGNED:	J. HANNA
	ENGINEER / ARCHITECT

TERMINAL ISLAND GRADE SEPARATION

SIGNAGE & STRIPING PLAN - 3

THE PORT OF LOS ANGELES
ENGINEERING DIVISION
425 S. PALOS VERDES STREET SAN PEDRO CA 90731-3309

DRAWING NUMBER	SHEET NUMBER
1-3497	SP-03

POLAPRO1_04/2023_BWD

GENERAL NOTE

1. ALL "LAXT BACKLAND" SIGNS ARE TO BE REPLACED WITH NEW "MARINE SUPPORT FACILITY" SIGNS.

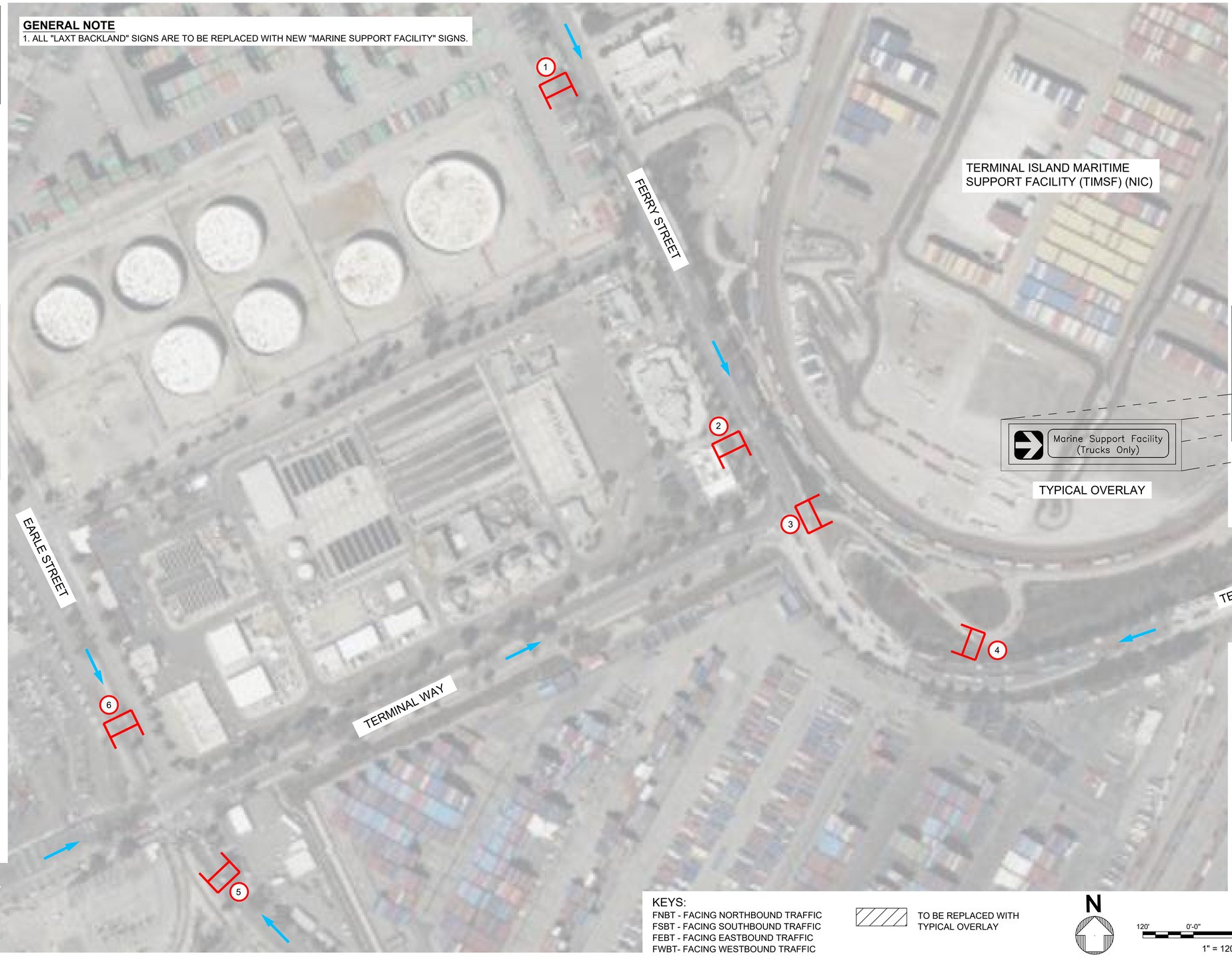



1 FSBT

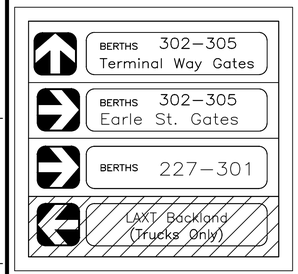

2 FSBT



3 FEBT

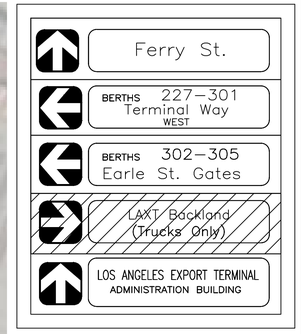

4 FNBT

SIGN TO BE RELOCATED PER SIGN PLANS

TYPICAL OVERLAY

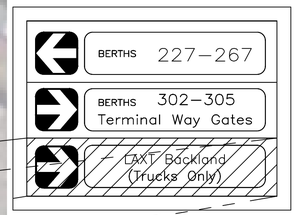

5 FWBT

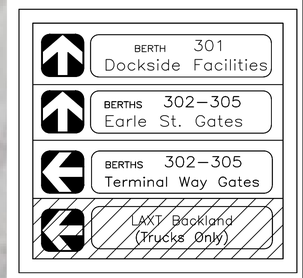

6 FSBT

KEYS:
FNBT - FACING NORTHBOUND TRAFFIC
FSBT - FACING SOUTHBOUND TRAFFIC
FEBT - FACING EASTBOUND TRAFFIC
FWBT- FACING WESTBOUND TRAFFIC

TO BE REPLACED WITH TYPICAL OVERLAY

N

120' 0'-0" 120' 240'
1" = 120'

SHEET ____ OF 400

NO.	DATE	DRAWN	REVISIONS -	CHK'D	APP'D
			NOT FOR CONSTRUCTION		

NO.	DATE	DRAWN	REVISIONS -	CHK'D	APP'D
			80% DESIGN		

Jacobs
3600 MICHELSON DRIVE, SUITE 500
IRVINE, CA 92612
T: (949) 224-7500
F: (949) 224-7501

SCALE: 1"=120'
DRAWN: T. PALUSZKIEWICZ
CHECKED: A. BENCINI
DESIGNED: . HANNA
ENGINEER / ARCHITECT

TERMINAL ISLAND GRADE SEPARATION

WAYFINDING SIGN REPLACEMENT PLAN

THE PORT OF LOS ANGELES
ENGINEERING DIVISION
425 S. PALOS VERDES STREET SAN PEDRO CA 90731-3309

DRAWING NUMBER 1-3497
SHEET NUMBER SP-04

POLAPRO1_04/2023_BWD

NOTES:

1. SIGN SHALL BE MOUNTED ON LIGHT POLE.
2. SIGN DIMENSIONS BASED ON CA MUTCD VERSION 2014.

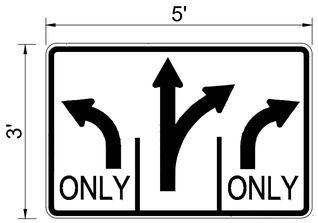

1SP-05
SP-05

R3-8A (RT) SIGNAGE DETAIL

SCALE: NTS

NO.	DATE	DRAWN	REVISIONS -	CHK'D	APP'D
			NOT FOR CONSTRUCTION		

NO.	DATE	DRAWN	REVISIONS -	CHK'D	APP'D
			80% DESIGN		

Jacobs
2600 MICHELSON DRIVE, SUITE 500
IRVINE, CA 92612
T: (949) 224-7500
F: (949) 224-7501

SCALE: NTS
DRAWN: C. GARCIA
CHECKED: A. BENCINI
DESIGNED: . HANNA
ENGINEER / ARCHITECT

SHEET ____ OF 400

TERMINAL ISLAND GRADE SEPARATION

SIGNAGE & STRIPING DETAIL SHEET

THE PORT OF LOS ANGELES
ENGINEERING DIVISION
425 S. PALOS VERDES STREET SAN PEDRO CA 90731-3309

DRAWING NUMBER: 1-3497
SHEET NUMBER: SP-05

POLAPRD1_04/2023_BWD

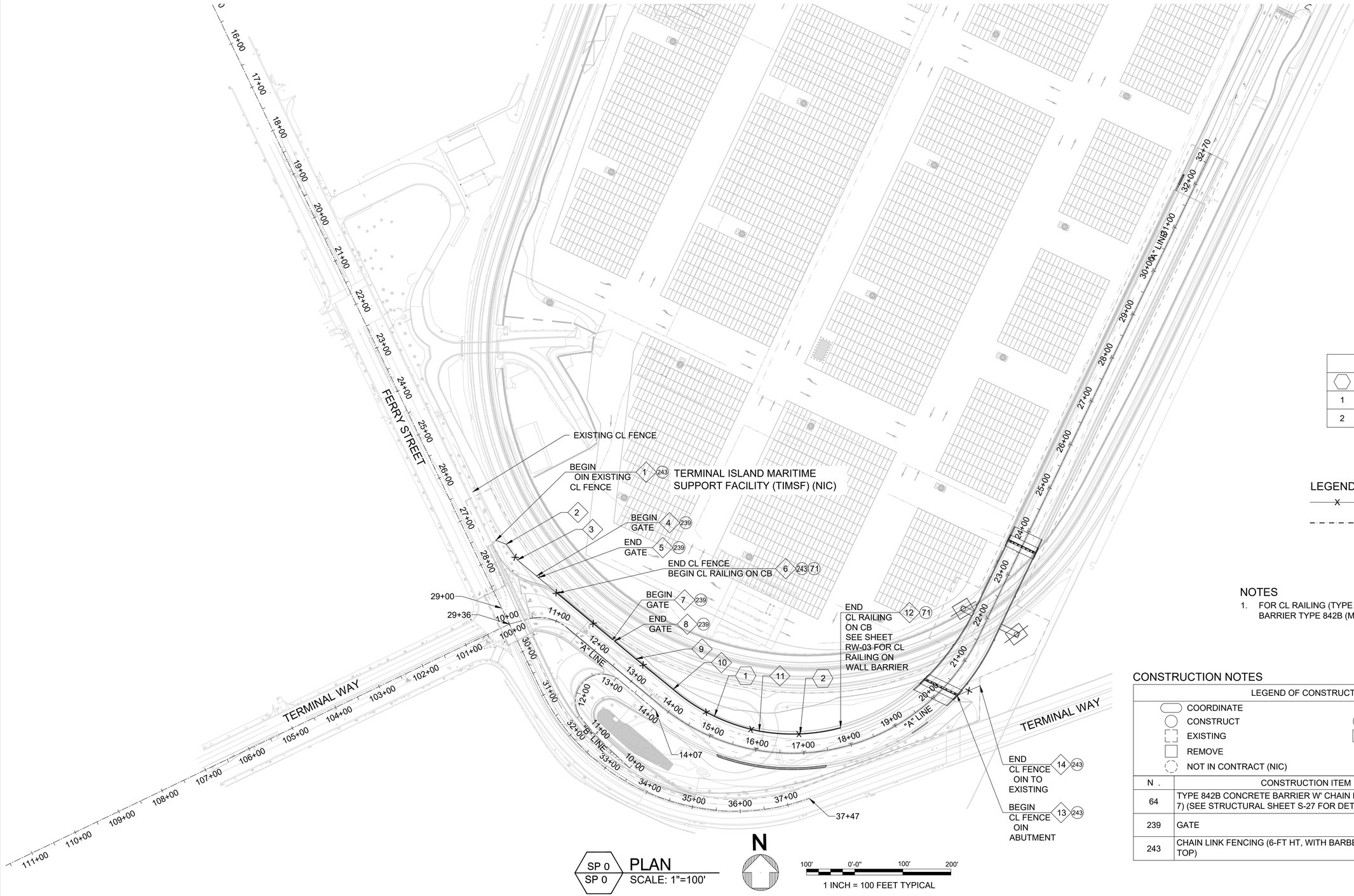

SP 0
SP 0

PLAN
SCALE: 1"=100'

100' 0'-0" 100' 200'

1 INCH = 100 FEET TYPICAL

TABLES

COORDINATE CONTROL		
◇	NORTHING	EASTING
1	1729449.22	6482547.75
2	1729441.25	6482569.24
3	1729408.64	6482592.19
4	1729375.26	6482632.24
5	1729371.95	6482636.21
6	1729339.58	6482675.05
7	1729243.36	6482790.47
8	1729240.05	6482794.44
9	1729203.26	6482838.57
10	1729140.04	6482915.98
11	1729053.33	6483094.83
12	1729060.15	6483263.80
13	1729127.05	6483506.12
14	1729147.31	6483553.58

CURVE DATA				
⬡	R		L	T
1	389.81	29 32'29"	200.98	102.78
2	390.00	25 02'38"	170.47	86.62

LEGEND

FENCE LINE

PRO ECT SITE LIMITS

NOTES

1. FOR CL RAILING (TYPE 7) CONNECTION DETAILS ON CONCRETE BARRIER TYPE 842B (MOD), SEE SHEET S-27.

CONSTRUCTION NOTES

LEGEND OF CONSTRUCTION NOTES

COORDINATE
CONSTRUCT
EXISTING
REMOVE
NOT IN CONTRACT (NIC)
REMODEL EXISTING
REMOVE & CONSTRUCT
RELOCATE
ABANDON

N .	CONSTRUCTION ITEM	REFERENCE DWG
64	TYPE 842B CONCRETE BARRIER W' CHAIN LINK RAILING (TYPE 7) (SEE STRUCTURAL SHEET S-27 FOR DETAILS)	CALTRANS B11-81, B11-82, B11-52
239	GATE	CALTRANS A85A
243	CHAIN LINK FENCING (6-FT HT, WITH BARBED WIRE POST TOP)	CALTRANS A85

SHEET ____ OF 400

NO.	DATE	DRAWN	REVISIONS -	CHK'D	APP'D
			NOT FOR CONSTRUCTION		

NO.	DATE	DRAWN	REVISIONS -	CHK'D	APP'D
			80% DESIGN		

Jacobs
2600 MICHELSON DRIVE, SUITE 500
IRVINE, CA 92612
T: (949) 224-7500
F: (949) 224-7501

SCALE: 1"=100'
DRAWN: T. PALUSZKIEWICZ
CHECKED: A. BENCINI
DESIGNED: . HANNA
ENGINEER / ARCHITECT

TERMINAL ISLAND GRADE SEPARATION

SITE FENCING LAYOUT

THE PORT OF LOS ANGELES
ENGINEERING DIVISION
425 S. PALOS VERDES STREET SAN PEDRO CA 90731-3309

DRAWING NUMBER 1-3497
SHEET NUMBER SP-07

POLAPRO1_04/2023_BWD

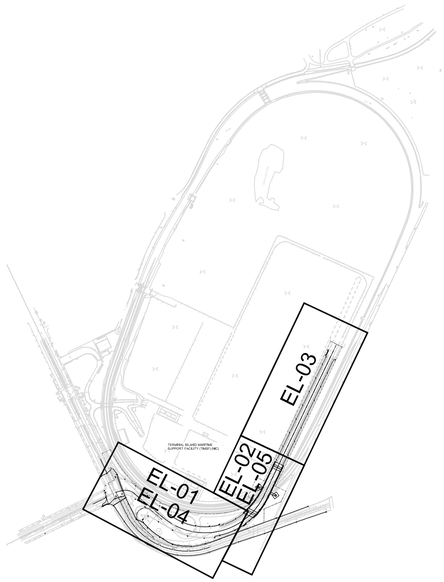

ELECTRICAL SITE PLAN
SCALE: 1"=500'

N

GENERAL NOTES

1. ALL WORK SHALL CONFORM TO THE LATEST BOARD OF PUBLIC WORKS OF THE CITY OF LOS ANGELES ADOPTED EDITION AND SUPPLEMENTS TO THE "GREENBOOK STANDARD SPECIFICATIONS FOR PUBLIC WORKS CONSTRUCTION" AND THE SPECIAL PROVISIONS.
2. CONTRACTOR SHALL COORDINATE WORK WITH REGULATORY AGENCIES SUCH AS DEPARTMENT OF WATER & POWER AND BUILDING & SAFETY PRIOR TO ACTUAL INSTALLATION DATE TO AVOID DELAYS.
3. WORK DONE SHALL COMPLY TO THE LATEST EDITION OF THE NATIONAL ELECTRICAL CODE .
4. GROUND ELECTRICAL EQUIPMENT PER NATIONAL ELECTRICAL CODE .
5. MATERIALS USED SHALL BE NEW, PREVIOUSLY UNUSED, UL LISTED AND/OR CITY OF LOS ANGELES TEST LAB APPROVED.
6. WIRING AND CONDUIT ROUTINGS ARE SHOWN DIAGRAMMATICALLY. INSTALL CONDUITS AND WIRES TO SUIT FIELD CONDITIONS.
7. UNDERGROUND CONDUITS SHALL BE INSTALLED 3'-6" BELOW FINISHED SURFACE TO THE TOP OF CONDUIT.
8. FOR EXISTING SUBSTRUCTURES AND REMOVALS REFER TO CIVIL SHEETS OF THIS SET.
9. WIRES SHALL BE COPPER WITH THWN' INSULATION, 600V RATING.
10. ELECTRICAL EQUIPMENT AND DEVICES INSTALLED OUTDOORS SHALL BE ENCLOSED IN WEATHERPROOF, CORROSION RESISTANT, HOT DIPPED GALVANIZED NEMA 3R ENCLOSURES. HARDWARE SHALL BE STAINLESS STEEL.
11. UNDERGROUND CONDUIT SHALL BE NON METALLIC SCHEDULE 40 PVC. THE TERMINATING 10'-0" OF UNDERGROUND CONDUIT, EXCEPT FOR UNDERGROUND PULL BOXES, SHALL BE RIGID GALVANIZED STEEL, WITH 40 MIL BONDED PVC COATING. EXPOSED CONDUIT SHALL BE RIGID GALVANIZED STEEL UNLESS OTHERWISE NOTED.
12. EMPTY CONDUITS SHALL SE PROVIDED WITH 1/8" DIAMETER NYLON PULL CORD RATED 250 POUNDS TENSILE STRENGTH. TAG CONDUITS AT EACH END IDENTIFYING THE PURPOSE OF THE CONDUIT AND THE LOCATION OF THE OTHER END.
13. MAINTAIN A MINIMUM CLEARANCE OF 6" WHEN CROSSING ANY SUBSTRUCTURES.
14. ALL UNDERGROUND CONDUIT BURIED STUD-OUT SHALL BE FURNISHED WITH CONCRETE MONUMENTS. 6"x6"x15" DEEP BURIED FLUSH WITH GRADE OVER THE CAPPED ENDS AND A 30"SQ. BRASS PLATE IDENTIFYING THE NUMBER AND SIZE OF CONDUITS.
15. WHERE CROSSING ANY SUBSTRUCTURES WHICH ARE UNKNOWN IN DEPTH, OR WHERE NEW CONDUITS CROSS EACH OTHER, OR CROSS PIPES, TRENCH CAREFULLY TO LOCATE SUBSTRUCTURES AT THE CROSSINGS. REROUTE CONDUITS, AT NO ADDITIONAL COST TO DEPARTMENT, OVER OR UNDER SUBSTRUCTURES AND NEW INTERFERED CONDUITS AND PIPES, WITH A MINIMUM 6" CLEARANCE IN CONFORMANCE WITH THE ELECTRICAL CODE. REPAIR CONDUITS AND WIRES DAMAGED DURING CONSTRUCTION AT NO ADDITIONAL COST TO DEPARTMENT. CALL UNITED SERVICE ALERT (USA) AT 1-800-422-4133 FOR FURTHER INFORMATION REGARDING EXISTING SUBSTRUCTURES.
16. A SLACK LENGTH OF 3'-0" SHALL BE PROVIDED FOR EACH WIRE IN EACH PULL BOX AND EACH POLE.
17. COORDINATE WORK WITH DWP, FOR DWP TO RAISE OVERHEAD CONDUCTORS TO ENSURE NECESSARY CLEARANCE FROM TRAFFIC SIGNAL/STREET LIGHT POLE AND ARM.
18. REPLACE EXISTING PULL BOXES WITH NEW TRAFFIC TYPE H-20 PULL BOX AND COVER, CONNECT CONDUIT AND WIRE AS EXISTING, ADJUST NEW BOX TO GRADE.
19. CONTACT LADWP TO VERIFY THE POLE QUADRANT OF NEW ELECTRICAL SERVICES.
20. NO. 5 PULL BOXES SHALL BE INSTALLED PER GREEN BOOK STANDARD PLAN 405-1.
21. NO. 9A PULL BOXES SHALL BE INSTALLED PER CALTRANS STANDARD PLAN ES-9C.

CONSTRUCTION NOTES

1. INSTALL CONDUIT INTO EXISTING PULL BOX
2. SPLICE NEW TO EXISTING CONDUCTORS
3. INSTALL STREET LIGHT POLE WITH CENTERLINE 42 INCHES BEHIND EDGE OF SHOULDER
4. INSTALL 2" CONDUIT IN CONCRETE BARRIER WITH PULL TAPE
5. INSTALL 2" CONDUIT WITH PULL TAPE
6. INSTALL CONDUIT EXPANSION/DEFLECTION FITTING
7. INSTALL NEW PULL BOX IN SAME LOCATION AS EXISTING

SYMBOLS

- EXISTING DWP POWER POLE
- REMOVED DWP POWER POLE (BY OTHERS)
- NEW STREET LIGHT POLE WITH LED FIXTURE AND SOLAR ARRAY
- EXISTING STREET LIGHT POLE WITH LIGHT FIXTURE
- REMOVED STREET LIGHT POLE WITH LIGHT FIXTURE
- NEW TRAFFIC SIGNAL POLE WITH NEW STREET LIGHT FIXTURE (POLE SHOWN FOR REFERENCE ONLY)
- EXISTING TRAFFIC SIGNAL POLE WITH EXISTING STREET LIGHT FIXTURE (POLE SHOWN FOR REFERENCE ONLY)
- REMOVED TRAFFIC SIGNAL POLE WITH REMOVED STREET LIGHT FIXTURE (POLE SHOWN FOR REFERENCE ONLY)
- NEW STREET LIGHT WITH LED FIXTURE AND SOLAR ARRAY (INSTALLED ON CONCRETE BARRIER. SEE STRUCTURES PLANS FOR DETAILS.)
- NEW SOFFIT LIGHT FIXTURE
- PROPOSED NO. 5 PULL BOX
- PROPOSED NO. 9A PULL BOX
- EXISTING PULL BOX
- REMOVED PULL BOX
- EXISTING LADWP VAULT
- PROPOSED CONDUIT
- EXISTING CONDUIT
- REMOVED CONDUIT

FIXTURE SCHEDULE

TYPE	SYMBOL	LUMINAIRE	POLE	SOLAR ARRAY	LUMINAIRE MAST ARM	MOUNTING
A		CLEARWORLD SOLAR POWERED FIXTURE. CATALOG # FLA60-L-T3M1-50K	CITY OF LOS ANGELES BUREAU OF STREET LIGHTING (LABSL) TYPE CD-953-B-7 LIGHT POLE PER STANDARD PLAN B-3685 SEE SHEET EL-08 FOR ADDITIONAL DETAILS	CLEARWORLD SOLAR ARRAY CATALOG # RW5202490	4'	ROADWAY
B		CLEARWORLD SOLAR POWERED FIXTURE. CATALOG # FLA60-L-T3M1-50K	CITY OF LOS ANGELES BUREAU OF STREET LIGHTING (LABSL) TYPE CD-953-B-7 LIGHT POLE PER STANDARD PLAN B-3685	CLEARWORLD SOLAR ARRAY CATALOG # RW5202490	4'	BARRIER
C		PHILIPS LUMEC 42 LED SOFFIT FIXTURE. CATALOG # [RETRO-479]-65W42LED3K -G2-LE5F-240-[FAWS-009]-BKTX	HOUSING AND PULL BOX No. 7 PER CALTRANS STD. PLAN ES-9E	-	-	BRIDGE SOFFIT
D		LEOTEK GREENCOBRA CATALOG # GCM1-60J-MV-30K-3R-GY-090-PCR7-CR	SEE TRAFFIC SIGNAL PLAN SHEET	-	SEE SHEET TS-02	TRAFFIC SIGNAL POLE SEE SHEET TS-02

SHEET ____ OF 400

NO.	DATE	DRAWN	REVISIONS -	CHK'D	APP'D
			NOT FOR CONSTRUCTION		

NO.	DATE	DRAWN	REVISIONS -	CHK'D	APP'D
			80% DESIGN		

FPL and Associates, Inc.
Engineering • Surveying • Planning
2 Executive Park, Suite 407, Irvine, CA 92606
T 949-252-1688 F 949-252-0588
www.FPLandAssociates.com

SCALE:
DRAWN: D. VILLEGAS
CHECKED: A. ZUPANSKI
DESIGNED: K. MILLER
ENGINEER / ARCHITECT

CHIEF OF DESIGN
ASSISTANT CHIEF HARBOR ENGINEER
CHIEF HARBOR ENGINEER ____ DATE

TERMINAL ISLAND GRADE SEPERATION

STREET LIGHTING PLAN - TITLE SHEET

THE PORT OF LOS ANGELES
ENGINEERING DIVISION
425 S. PALOS VERDES STREET SAN PEDRO CA 90731-3309

DRAWING NUMBER 1-3497
SHEET NUMBER EL-00

DWG: C:\Users\KEVIN~1.MIL\AppData\Local\Temp\AcPublish_37360\1-3497 E-EL.dwg USER: kevin.miller
DATE: Aug 18, 2025 2:31pm
POLAPRO1_042023_BW0

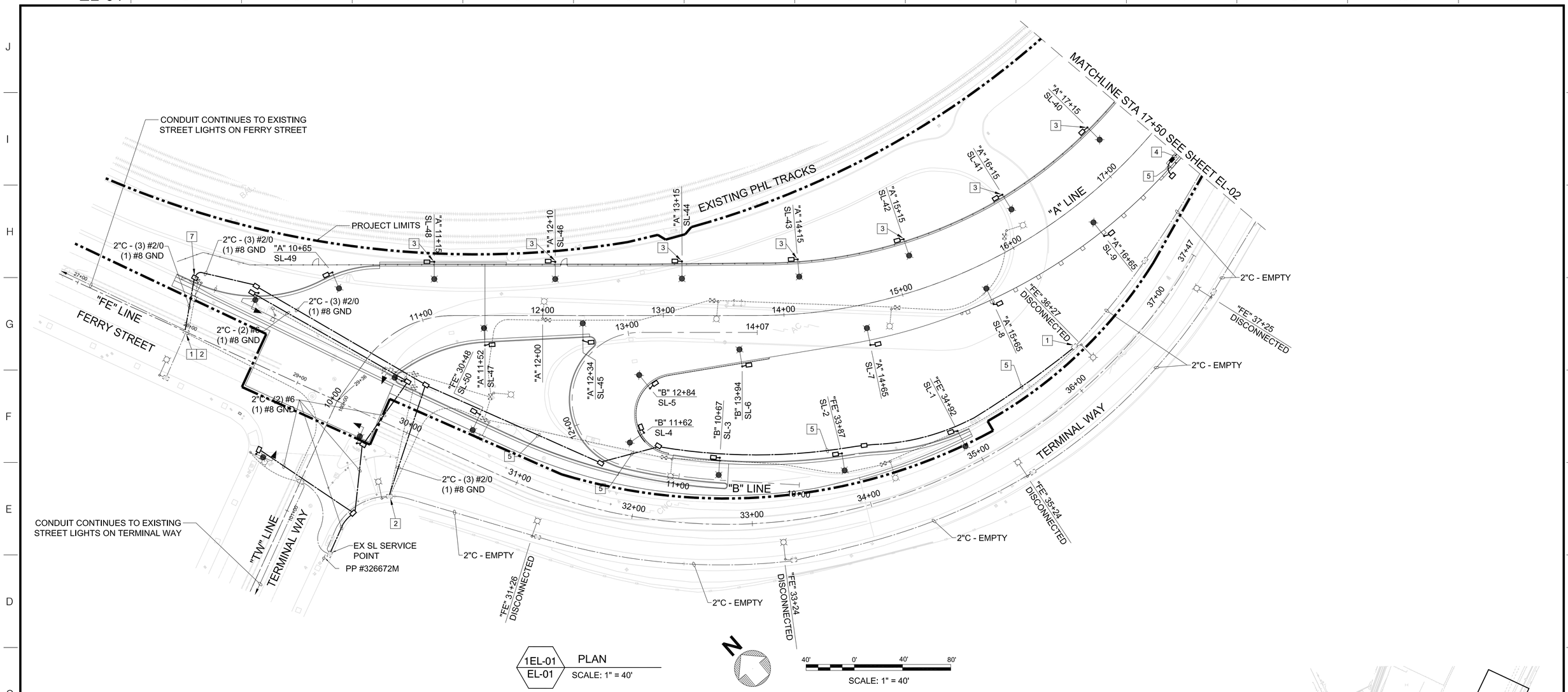

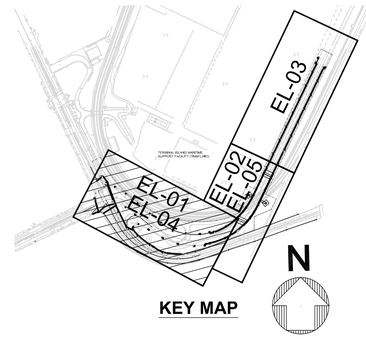

KEY MAP

SHEET ---- OF 400

NO.	DATE	DRAWN	REVISIONS -	CHK'D	APP'D	NO.	DATE	DRAWN	REVISIONS -	CHK'D	APP'D
			NOT FOR CONSTRUCTION						80% DESIGN		

FPL and Associates, Inc.

SCALE: 1" = 40'
DRAWN: D. VILLEGAS
CHECKED: A. ZUPANSKI
DESIGNED: K. MILLER
ENGINEER / ARCHITECT

CHIEF OF DESIGN
ASSISTANT CHIEF HARBOR ENGINEER
CHIEF HARBOR ENGINEER DATE

TERMINAL ISLAND GRADE SEPERATION

STREET LIGHTING PLAN

THE PORT OF LOS ANGELES
ENGINEERING DIVISION
425 S. PALOS VERDES STREET SAN PEDRO CA 90731-3309

DRAWING NUMBER 1-3497
SHEET NUMBER EL-01

DWG: C:\Users\KEVIN~1.MIL\AppData\Local\Temp\AcPublish_37360\1-3497 E-EL.dwg USER: kevin.miller
DATE: Aug 18, 2025 2:34pm

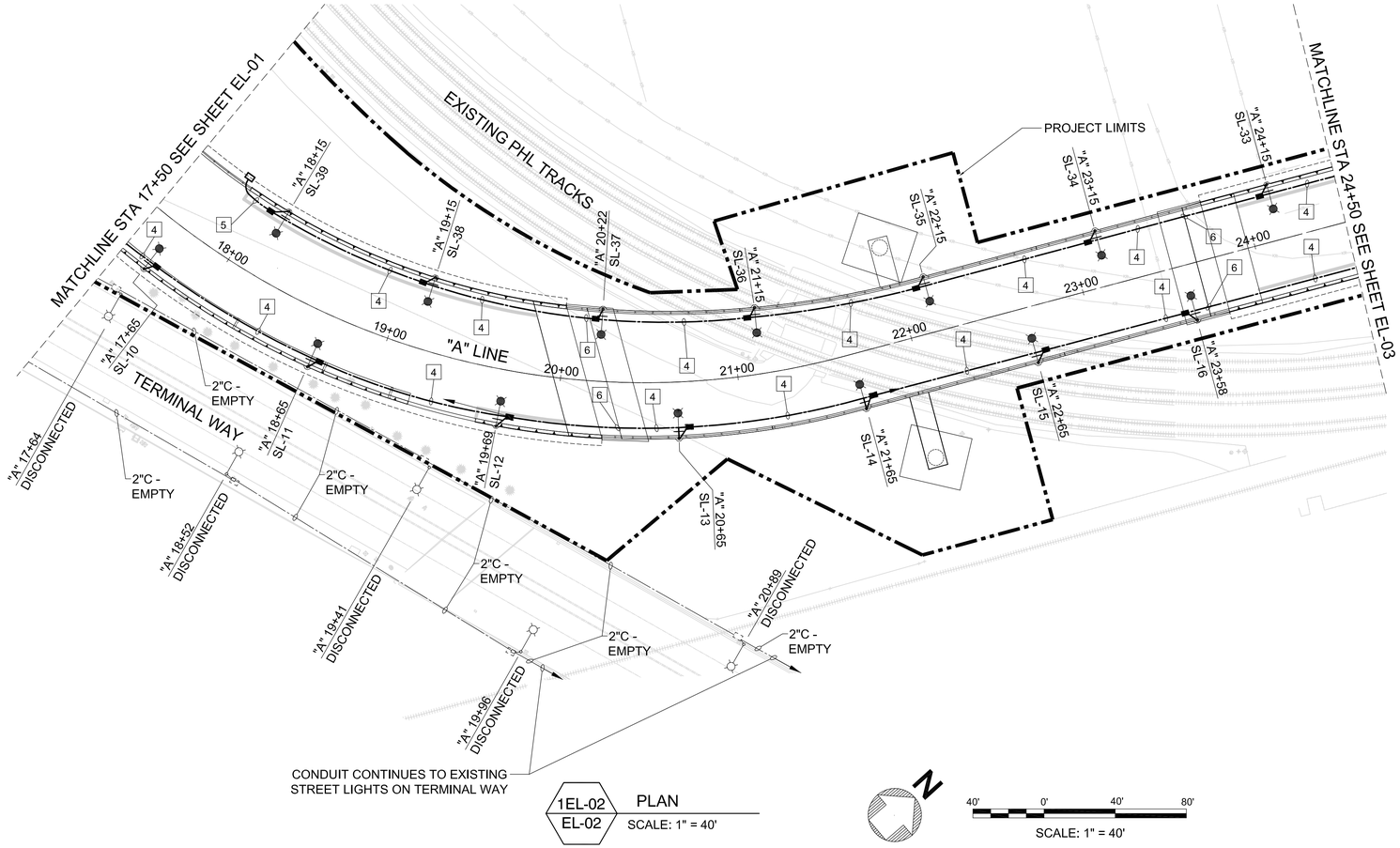

1EL-02 / EL-02 PLAN
SCALE: 1" = 40'

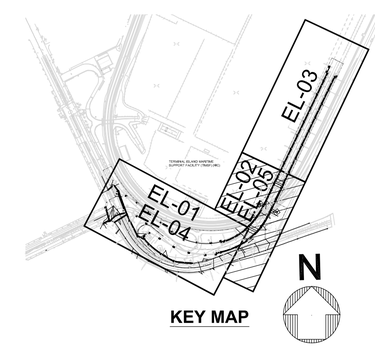

KEY MAP

SHEET ---- OF 400

NO.	DATE	DRAWN	REVISIONS -	CHK'D	APP'D
			NOT FOR CONSTRUCTION		

NO.	DATE	DRAWN	REVISIONS -	CHK'D	APP'D
			80% DESIGN		

FPL and Associates, Inc.
Engineering Consultants - Civil - Transportation - Site Development
3 Corporate Park, Suite 401 Irvine, CA 92606
T: 949-252-1688 F: 949-252-0088
www.FPLandAssociates.com

SCALE: 1" = 40'
DRAWN: D. VILLEGAS
CHECKED: A. ZUPANSKI
DESIGNED: K. MILLER
ENGINEER / ARCHITECT

CHIEF OF DESIGN
ASSISTANT CHIEF HARBOR ENGINEER
CHIEF HARBOR ENGINEER DATE

TERMINAL ISLAND GRADE SEPERATION

STREET LIGHTING PLAN

THE PORT OF LOS ANGELES
ENGINEERING DIVISION
425 S. PALOS VERDES STREET SAN PEDRO CA 90731-3309

DRAWING NUMBER 1-3497
SHEET NUMBER EL-02

DWG: C:\Users\KEVIN~1.MIL\AppData\Local\Temp\AcPublish_37360\1-3497 E-EL.dwg USER: kevin.miller
DATE: Aug 18, 2025 2:35pm

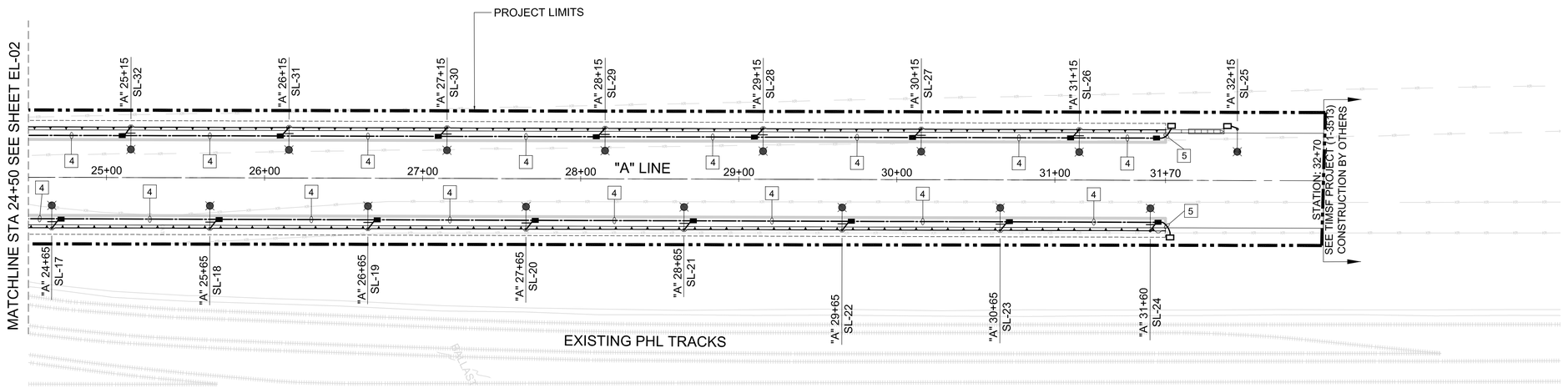

1EL-03 / EL-03 PLAN
SCALE: 1" = 40'

N

40' 0' 40' 80'
SCALE: 1" = 40'

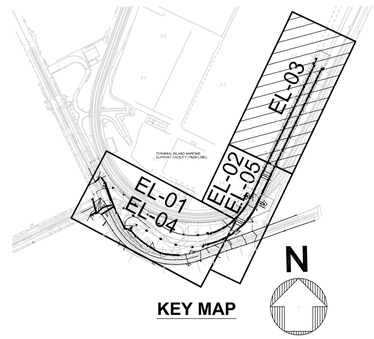

KEY MAP

SHEET ____ OF 400

NO.	DATE	DRAWN	REVISIONS -	CHK'D	APP'D
			NOT FOR CONSTRUCTION		

NO.	DATE	DRAWN	REVISIONS -	CHK'D	APP'D
			80% DESIGN		

FPL and Associates, Inc.
Engineering • Architecture • Planning • Development
Engineering Certificate of Authorization No. 00000
1 Park Plaza, Suite 1000 Irvine, CA 92614
T: 949.252.1000 F: 949-252-0055
www.FPLandAssociates.com

SCALE:	1" = 40'
DRAWN:	D. VILLEGAS
CHECKED:	A. ZUPANSKI
DESIGNED:	K. MILLER
	ENGINEER / ARCHITECT

CHIEF OF DESIGN

ASSISTANT CHIEF HARBOR ENGINEER

CHIEF HARBOR ENGINEER _____ DATE

TERMINAL ISLAND GRADE SEPERATION

STREET LIGHTING PLAN

THE PORT OF LOS ANGELES
ENGINEERING DIVISION
425 S. PALOS VERDES STREET SAN PEDRO CA 90731-3309

DRAWING NUMBER 1-3497

SHEET NUMBER EL-03

DWG: C:\Users\KEVIN~1.MIL\AppData\Local\Temp\AcPublish_37360\1-3497 E-EL.dwg USER: kevin.miller
DATE: Aug 18, 2025 2:35pm

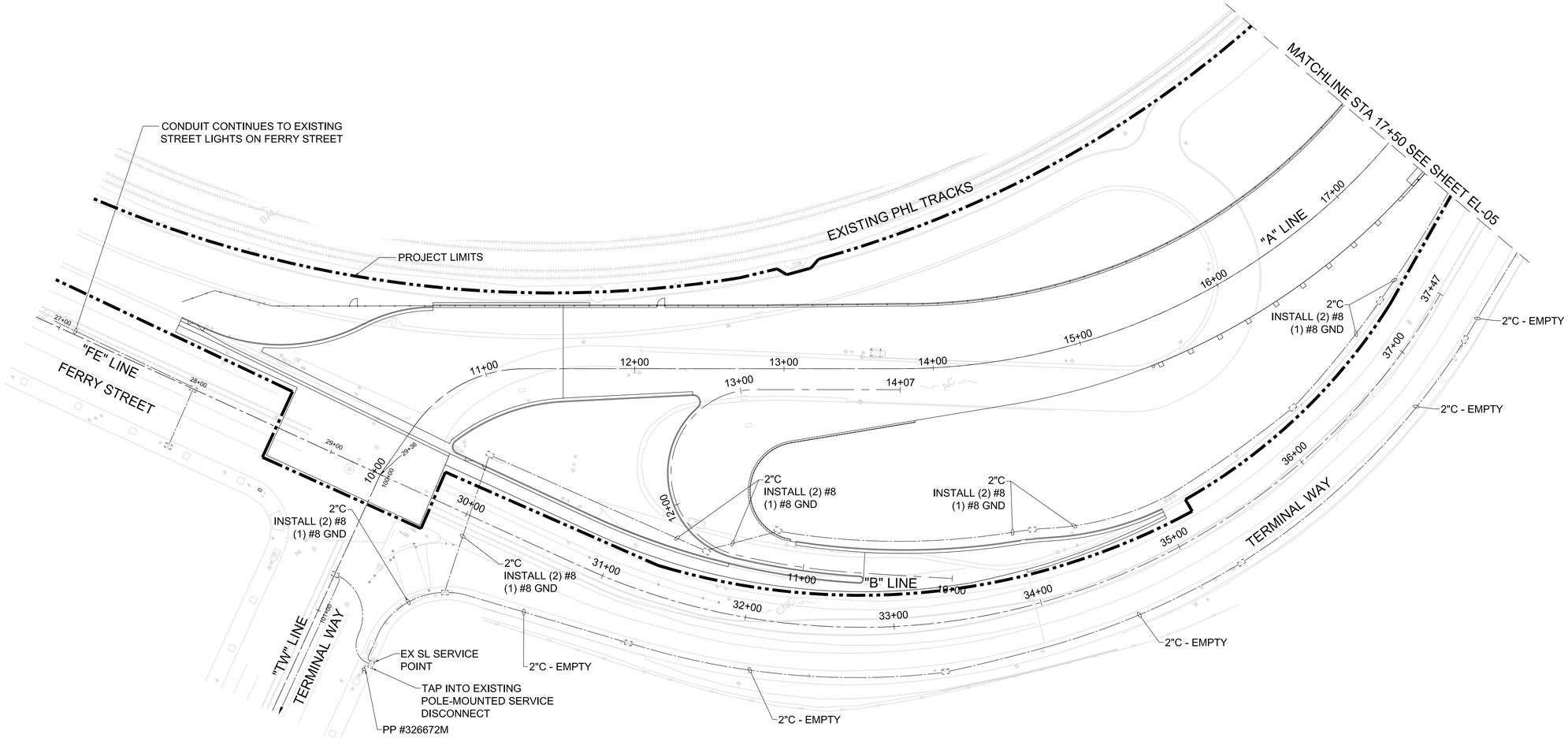

1EL-04 / EL-04 PLAN
SCALE: 1" = 40'

N

40' 0' 40' 80'
SCALE: 1" = 40'

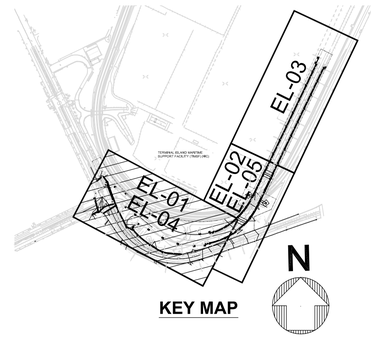

KEY MAP

SHEET ---- OF 400

NO.	DATE	DRAWN	REVISIONS -	CHK'D	APP'D	NO.	DATE	DRAWN	REVISIONS -	CHK'D	APP'D
			NOT FOR CONSTRUCTION						80% DESIGN		

FPL and Associates, Inc.

SCALE: 1" = 40'
DRAWN: D. VILLEGAS
CHECKED: A. ZUPANSKI
DESIGNED: K. MILLER
ENGINEER / ARCHITECT

CHIEF OF DESIGN
ASSISTANT CHIEF HARBOR ENGINEER
CHIEF HARBOR ENGINEER DATE

TERMINAL ISLAND GRADE SEPERATION

RAIL LIGHTING PLAN

THE PORT OF LOS ANGELES
ENGINEERING DIVISION
425 S. PALOS VERDES STREET SAN PEDRO CA 90731-3309

DRAWING NUMBER 1-3497
SHEET NUMBER EL-04

DWG: C:\Users\KEVIN~1.MIL\AppData\Local\Temp\AcPublish_37360\1-3497 E-EL.dwg USER: kevin.miller
DATE: Aug 18, 2025 2:35pm

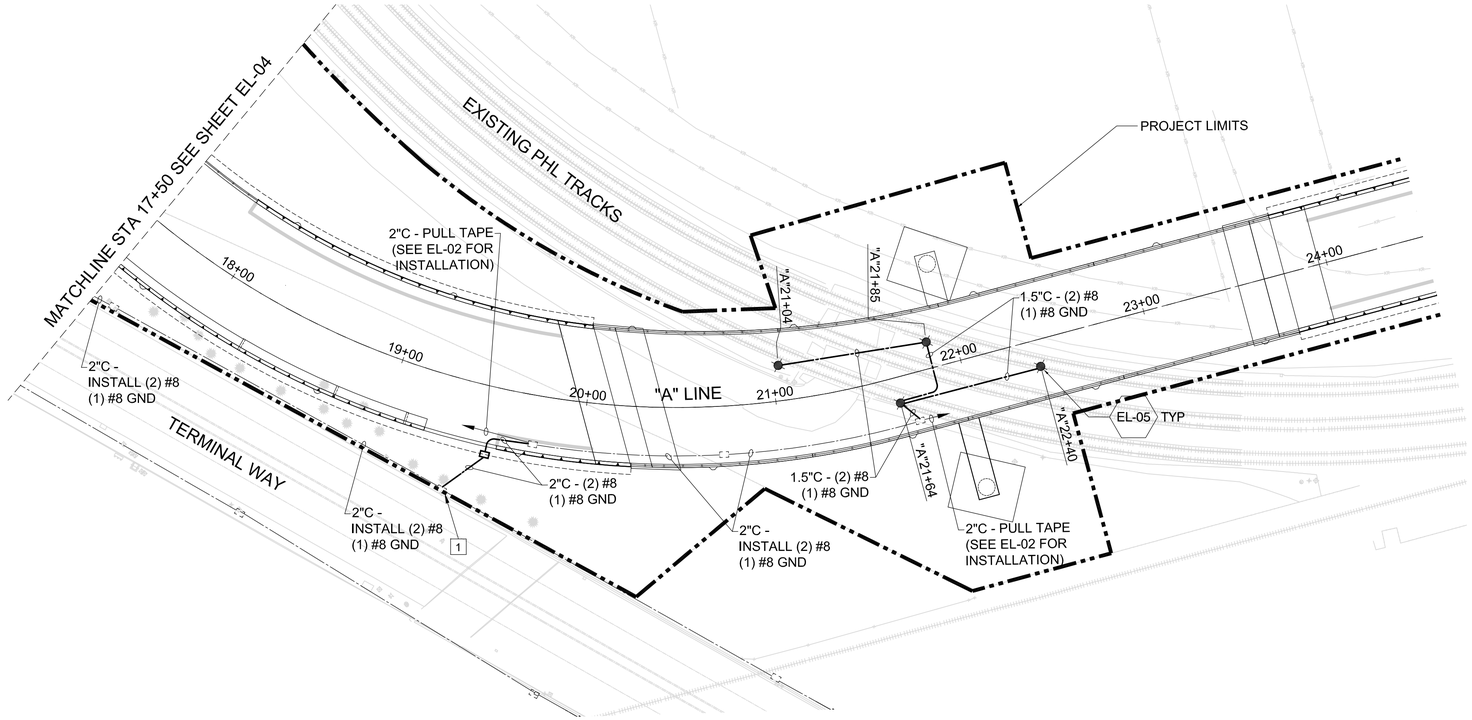

1EL-05 / EL-05 PLAN
SCALE: 1" = 40'

N

40' 0' 40' 80'
SCALE: 1" = 40'

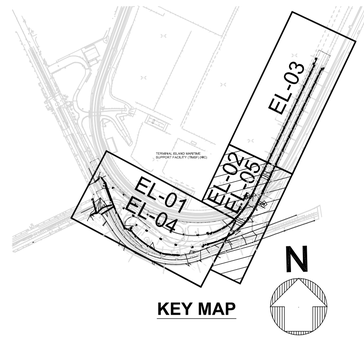

KEY MAP

SHEET ---- OF 400

NO.	DATE	DRAWN	REVISIONS -	CHK'D	APP'D	NO.	DATE	DRAWN	REVISIONS -	CHK'D	APP'D
			NOT FOR CONSTRUCTION						80% DESIGN		

FPL and Associates, Inc.
Engineering • Telecommunications • Geospatial
30 Corporate Park, Suite 401 Irvine, CA 92606
T: 949-252-1688 F: 949-252-0595
www.FPLandAssociates.com

SCALE: 1" = 40'
DRAWN: D. VILLEGAS
CHECKED: A. ZUPANSKI
DESIGNED: K. MILLER
ENGINEER / ARCHITECT

CHIEF OF DESIGN
ASSISTANT CHIEF HARBOR ENGINEER
CHIEF HARBOR ENGINEER DATE

TERMINAL ISLAND GRADE SEPERATION
RAIL LIGHTING PLAN

THE PORT OF LOS ANGELES
ENGINEERING DIVISION
425 S. PALOS VERDES STREET SAN PEDRO CA 90731-3309

DRAWING NUMBER 1-3497
SHEET NUMBER EL-05

DWG: C:\Users\KEVIN~1.MIL\AppData\Local\Temp\AcPublish_37360\1-3497 E-EL.dwg USER: kevin.miller
DATE: Aug 18, 2025 2:36pm

POLAPRO1_04/2023_BWD

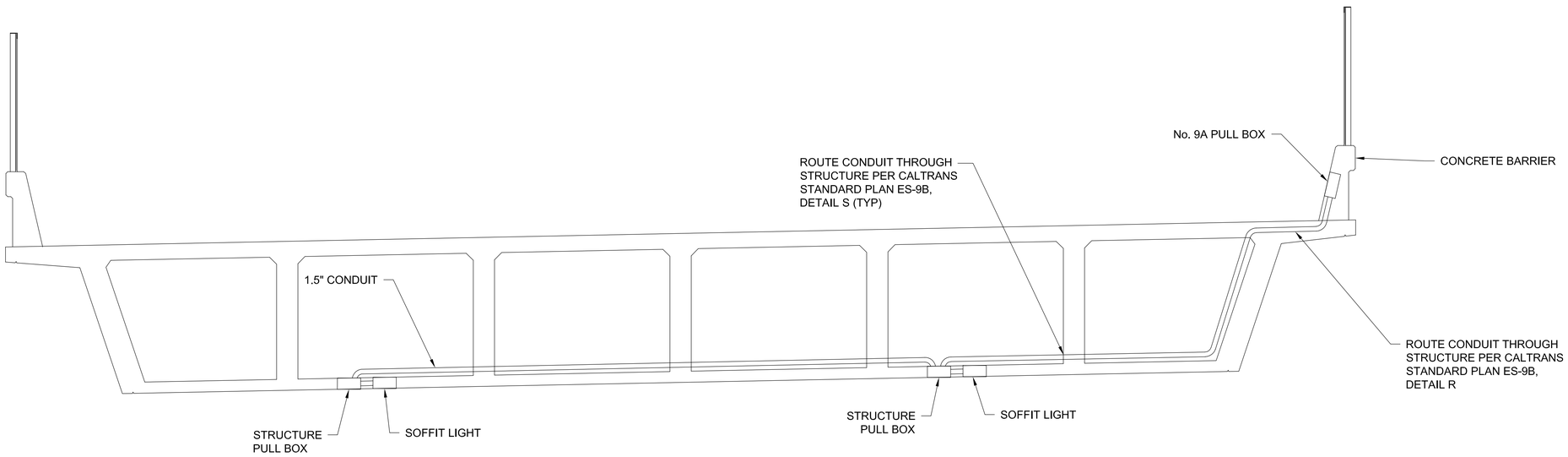

1EL-05
EL-05
SOFFIT LIGHTING DETAIL
SCALE: NTS

NOTE:

1. REFER TO STRUCTURAL PLANS FOR EXACT CONDUIT ROUTING AND ADDITIONAL DETAILS.

SHEET ____ OF 400

NO.	DATE	DRAWN	REVISIONS -	CHK'D	APP'D
			NOT FOR CONSTRUCTION		

NO.	DATE	DRAWN	REVISIONS -	CHK'D	APP'D
			80% DESIGN		

FPL and Associates, Inc.
Engineering • Traffic • Civil • Transportation • Site Development
41 Corporate Park, Suite 417, Irvine, CA 92606
(949) 553-1001 • FAX (949) 553-1005
www.FPLandAssociates.com

SCALE:
DRAWN: D. VILLEGAS
CHECKED: A. ZUPANSKI
DESIGNED: K. MILLER
ENGINEER / ARCHITECT

CHIEF OF DESIGN
ASSISTANT CHIEF HARBOR ENGINEER
CHIEF HARBOR ENGINEER ____ DATE

TERMINAL ISLAND GRADE SEPERATION

STREET LIGHTING DETAILS

THE PORT OF LOS ANGELES
ENGINEERING DIVISION
425 S. PALOS VERDES STREET SAN PEDRO CA 90731-3309

DRAWING NUMBER 1-3497

SHEET NUMBER EL-06

POLAPROC1_04/2023_BWD

DWG: C:\Users\KEVIN~1.MIL\AppData\Local\Temp\AcPublish_37360\1-3497 E-EL.dwg USER: kevin.miller
DATE: Aug 18, 2025 2:36pm

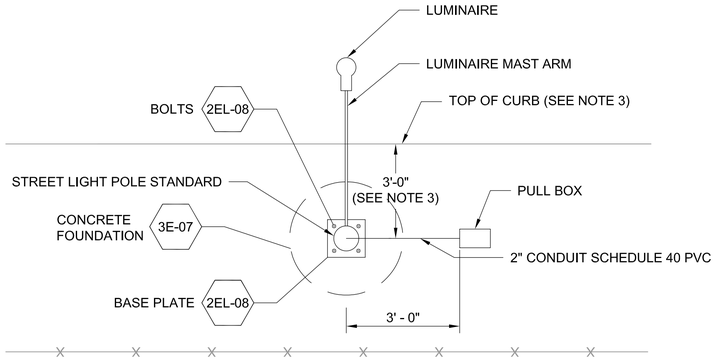

1EL-07 / EL-07 STREET LIGHT POLE INSTALLATION DETAIL

SCALE: NTS

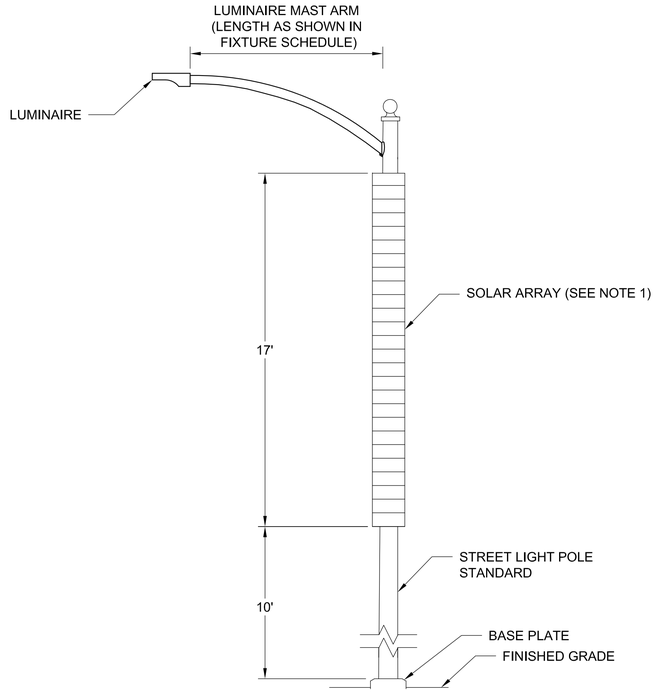

2EL-07 / EL-07 SINGLE-ARM SOLAR STREET LIGHT POLE DETAIL

SCALE: NTS

NOTES:

1. INSTALL PER MANUFACTURER'S WRITTEN INSTRUCTIONS.
2. REFER TO FIXTURE SCHEDULE FOR PART CATALOG NUMBERS.
3. STANDARD POLE PLACEMENT SHOWN UNLESS OTHERWISE NOTED ON PLANS.

SHEET ____ OF 400

NO.	DATE	DRAWN	REVISIONS -	CHK'D	APP'D
			NOT FOR CONSTRUCTION		

NO.	DATE	DRAWN	REVISIONS -	CHK'D	APP'D
			80% DESIGN		

FPL and Associates, Inc.
Engineering • Traffic • Civil • Transportation • Site Development
70 Corporate Park, Suite 401 Irvine, CA 92606
T: 949-252-1699 F: 949-252-0360
www.FPLandAssociates.com

SCALE:
DRAWN: D. VILLEGAS
CHECKED: A. ZUPANSKI
DESIGNED: K. MILLER
ENGINEER / ARCHITECT

CHIEF OF DESIGN
ASSISTANT CHIEF HARBOR ENGINEER
CHIEF HARBOR ENGINEER ____ DATE

TERMINAL ISLAND GRADE SEPERATION

STREET LIGHTING DETAILS

THE PORT OF LOS ANGELES
ENGINEERING DIVISION
425 S. PALOS VERDES STREET SAN PEDRO CA 90731-3309

DRAWING NUMBER 1-3497

SHEET NUMBER EL-07

DWG: C:\Users\KEVIN~1.MIL\AppData\Local\Temp\AcPublish_37360\1-3497 E-EL.dwg USER: kevin.miller
DATE: Aug 18, 2025 2:36pm

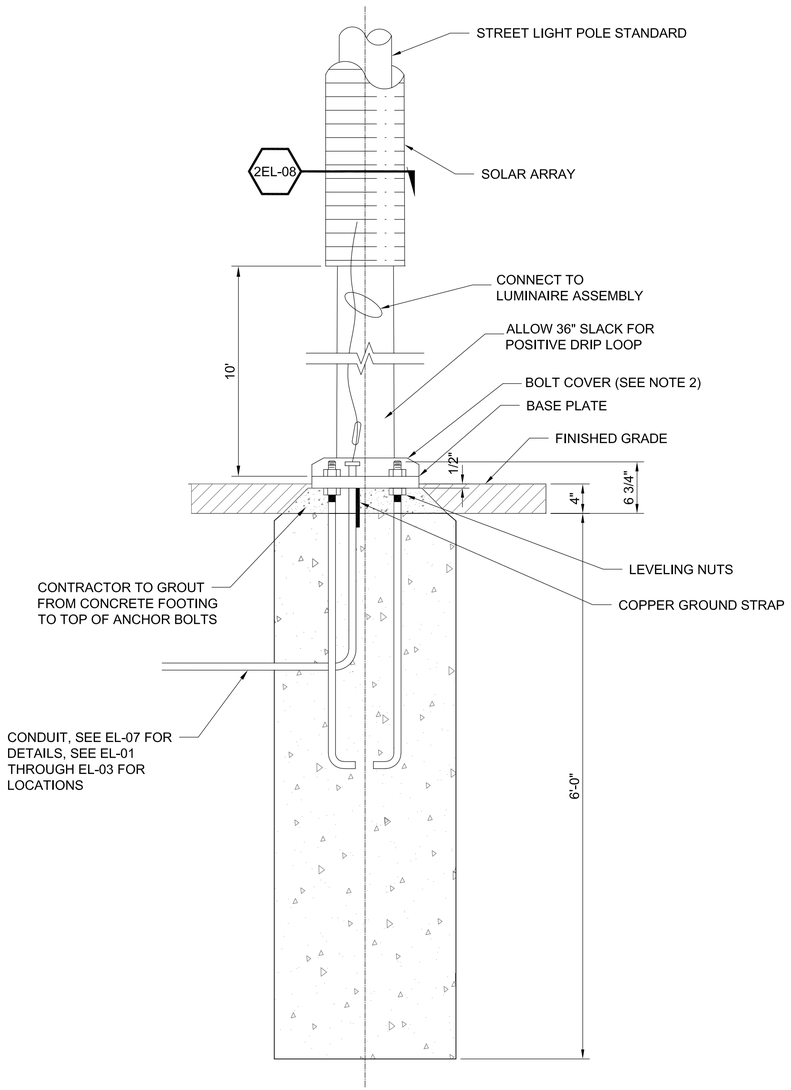

1EL-08 / 1EL-08 STREET LIGHT POLE SECTION DETAIL
SCALE: NTS

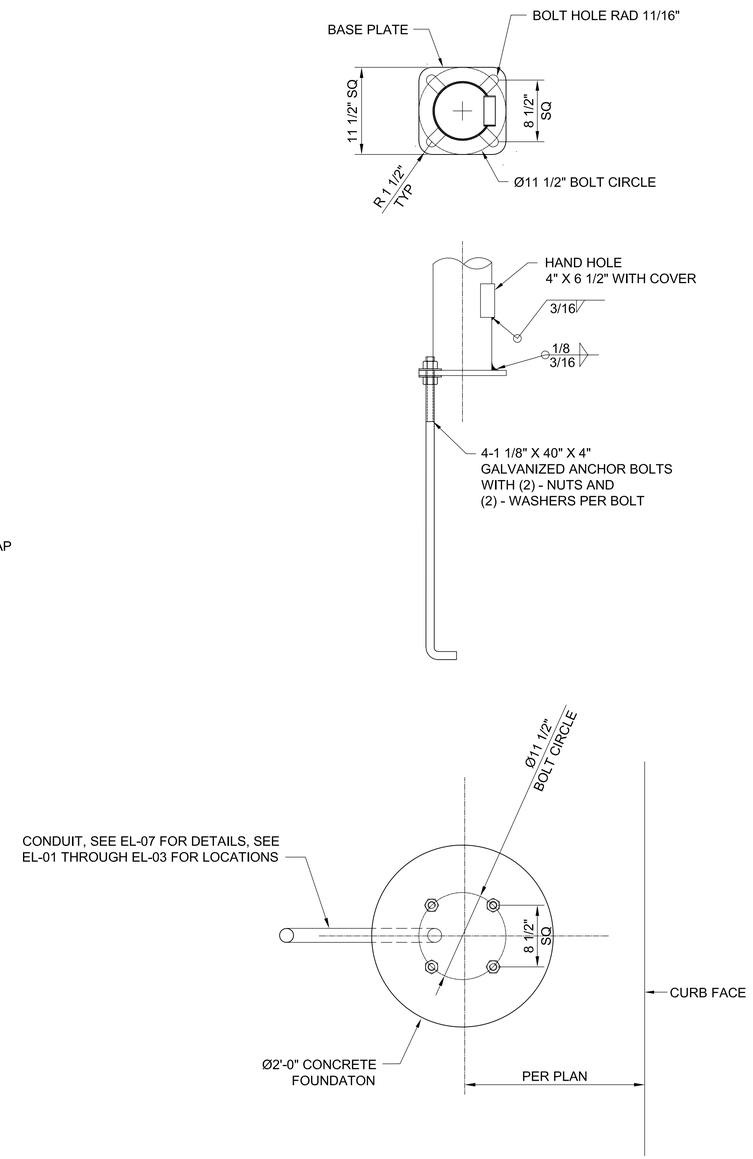

2EL-08 / 1EL-08 DETAILS
SCALE: NTS

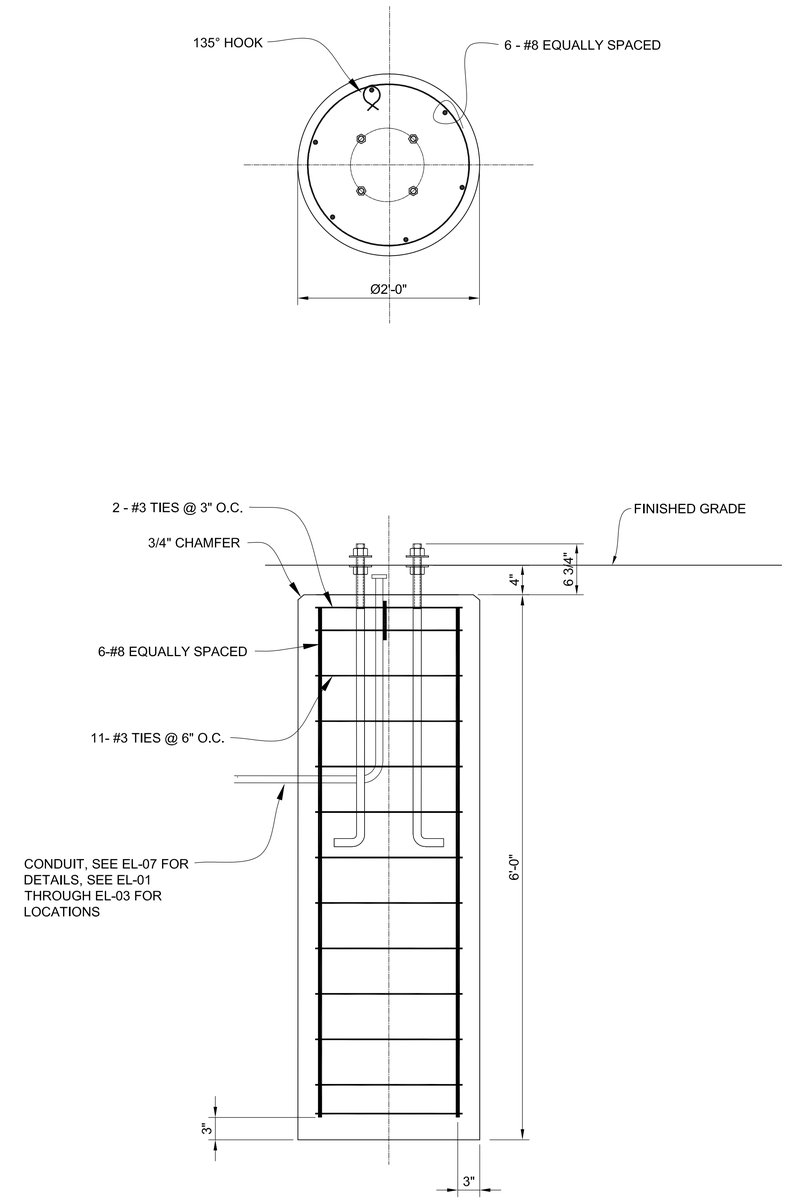

3EL-08 / EL-08 DETAILS
SCALE: NTS

NOTES:

1. PACK ALL CONDUIT ENDS WITH CONTINUOUS PIECE OF CAKUM, AFTER CABLE IS INSTALLED.
2. INSTALL ELECTROLIER BOLT COVER PER PACIFIC UNION METAL CO. DRAWING NO. 1820-8A OR APPROVED EQUAL.
3. THIS SHEET IS REPRODUCED FROM STANDARD PLAN B-3685, BUREAU OF STREET LIGHTING, DEPARTMENT OF PUBLIC WORKS, CITY OF LOS ANGELES.
4. INSTALLATION AND MOUNTING OF POLE, BASE COVER, BASE PLATE, ANCHOR BOLTS, NUTS, WASHERS, DRY PACK GROUT, GROUNDING LUG PER MANUFACTURER'S SHOP DRAWINGS AND RECOMMENDATIONS.
5. CONCRETE FOR FOUNDATION SHALL HAVE A MINIMUM COMPRESSIVE STRENGTH OF 4000 PSI AT 28 DAYS.
6. REFER TO FIXTURE SCHEDULE FOR ADDITIONAL PART CATALOG NUMBERS.

SHEET ---- OF 400

NO.	DATE	DRAWN	REVISIONS -	CHK'D	APP'D
			NOT FOR CONSTRUCTION		

NO.	DATE	DRAWN	REVISIONS -	CHK'D	APP'D
			80% DESIGN		

FPL and Associates, Inc.

SCALE:
DRAWN: D. VILLEGAS
CHECKED: A. ZUPANSKI
DESIGNED: K. MILLER
ENGINEER / ARCHITECT

CHIEF OF DESIGN
ASSISTANT CHIEF HARBOR ENGINEER
CHIEF HARBOR ENGINEER DATE

TERMINAL ISLAND GRADE SEPERATION
STREET LIGHTING DETAILS

THE PORT OF LOS ANGELES
ENGINEERING DIVISION
425 S. PALOS VERDES STREET SAN PEDRO CA 90731-3309

DRAWING NUMBER 1-3497
SHEET NUMBER EL-08

DWG: C:\Users\KEVIN~1.MIL\AppData\Local\Temp\AcPublish_37360\1-3497 E-EL.dwg USER: kevin.miller
DATE: Aug 18, 2025 2:36pm

SIGNAL STANDARD SCHEDULE

	No.	TYPE	FOUND. TYPE	PED. PUSH BUT'N TYPE	PED. PUSH BUT'N PHASE	REMARKS
*	(1)	332 CAB.	F-332	–	–	ATSAC 2070 Controller in 332 Cabinet
*	(2)	24A-3-70	CIDH	–	4	
*	(3)	1	F-1	–	–	
***	(4)	**CD954**	**PLATFORM**	**–**	**–**	**15' M.A.**
**	(5)	**CD954**	**PLATFORM**	**–**	**–**	**15' M.A.**
	(6)	CD954	F-2	6"	4	

* Existing
** Per LADOT Std. Dwg. No. S-57.2C
*** Per LADOT Std. Dwg. No. S-57.2D

ESTIMATED MATERIAL FURNISHED BY LADOT

UNITS	MATERIAL

ESTIMATED SALVAGE MATERIAL TO BE RETURNED TO LADOT

UNITS	MATERIAL
ALL	REMOVED LED HEADS

CONDUCTOR SCHEDULE

| SIZE No. | CABLE / WIRE | RUN | | | | | |

SIGNAL STANDARD SCHEDULE

	No.	TYPE	FOUND. TYPE	PED. PUSH BUT'N TYPE	PED. PUSH BUT'N PHASE	REMARKS
*	⊗ (1)	332 CAB.	F-332	–	–	ATSAC 2070 Controller in 332 Cabinet
**	⊗ (2)	19-4-100	CIDH	APS(4P)	4	25' M.A., INSTALL APS
*	⊗ (3)	1	F-1	–	–	
**	⊗ (4)	29-5-100	CIDH	–	–	50' M.A., F=20'
**	⊗ (5)	19-4-100	CIDH	–	–	30' M.A.
**	⊗ (6)	19-4-100	CIDH	APS(4P)	4	25' M.A., F=12', INSTALL APS

* Existing
** **Per LADOT Std. Dwg. No. S-52.1.6.**

ESTIMATED MATERIAL FURNISHED BY LADOT

UNITS	MATERIAL

ESTIMATED SALVAGE MATERIAL TO BE RETURNED TO LADOT

UNITS	MATERIAL
ALL	REMOVED LED HEADS

CONDUCTOR SCHEDULE

SIZE No.	CABLE / WIRE	RUN
MULTI	5 CONDUCTOR CABLE 5 X #14	2, 4, 4, 6
MULTI	9 CONDUCTOR CABLE 8 X #14 & 1 X #12(COM)	1
MULTI	13 CONDUCTOR CABLE 12 X #14 & 1 X #12(COM)	1
MULTI	28 CONDUCTOR CABLE 27 X #14 & 1 X #10(COM)	1, 1
MULTI	4 CONDUCTOR CABLE (APS) 4 X #18	
6	SERVICE	
14	PED PUSH BUTTON	
18	DLC (2 PAIR)	1, 1, 1, 1, 3, 1, 4, 4, 4, 1
18	DLC (3 PAIR)	1, 1, 1, 1, 1, 1, 1, 1, 1
18	DLC (4 PAIR)	
14	INTERCONNECT (7 WIRE)	
22	INTERCONNECT (12 PAIR)	
**	GND WIRE & MEASURING TAPE	
	CONDUIT SIZE	2"2"*3"2"2"2"2"3"3"*****2"2"

* FOR EXISTING CONDUIT RUNS DESIGNATED WITH AN "*" (ABOVE), THE CONTRACTOR SHALL ADD/INSTALL NEW CONDUCTORS/CABLES AND PROTECT AND MAINTAIN ALL EXISTING CONDUCTORS/CABLES. IF THE EXISTING CONDUIT IS IN POOR CONDITION OR THE CONDUIT CAPACITY EXCEEDS THIRTY-ONE PERCENT (>31%), THE CONTRACTOR SHALL PROVIDE A NEW CONDUIT TO ACCOMMODATE ALL CABLES AND CONDUCTORS.

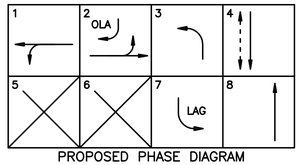

PROPOSED PHASE DIAGRAM

NOTES:
1. SEMI-ACTUATED OPERATION (ATSAC 2070 CONTROLLER IN 332 CABINET)

   ø1 – TERMINAL WAY WB & WB LT
   ø2 – TERMINAL WAY EB & EB LT
   ø3 – TERMINAL WAY NB LT
   ø4 – FERRY ST. SB & W/S PED XING
   ø7 – TERMINAL WAY SB LT
   ø8 – TERMINAL WAY NB
   OLA (ø2) – FERRY ST. SB RT

   SAN PEDRO ATSAC SYSTEM
   ATSAC CABLE INTERCONNECT

2 REMOVE TRAFFIC SIGNAL EQUIPMENT, STANDARD, FOUNDATION, AND PULL BOX; ABANDON CONDUITS.

3 INSTALL VEHICLE DETECTOR LOOP(S) PER LADOT STD. DWG. NO. S-70.1A

4 INSTALL DETECTOR LOOP(S) PER LADOT STD. DWG. NO. S-70.1A & S-70.1D (CASE II).

5 INSTALL ACCESSIBLE PEDESTRIAN SIGNAL (APS) PER LADOT STD. DWG. NO. S-73.2.

6 FIELD MODIFICATION OF CONTROLLER REQUIRED. NOTIFY THE LADOT SIGNAL SHOP AT (213) 473-8468 FIFTEEN (15) WORKING DAYS PRIOR TO START OF CONSTRUCTION TO OBTAIN NEW CONFLICT MONITOR AND CONTROLLER TIMING PACKAGE. LADOT WILL MAKE ALL CONTROLLER MODIFICATIONS AND INSTALL THE NEW CONFLICT MONITOR IN THE EXISTING CONTROLLER CABINET.

7. CONTRACTOR SHALL BE RESPONSIBLE FOR LABOR AND MATERIAL INVOLVED IN THE REMOVAL, MARKOUT, AND INSTALLATION OF ALL SIGNS, STRIPING, AND PAVEMENT MARKINGS PER PORT OF LOS ANGELES GEOMETRIC PLAN NO. SP-01 AND THIS SIGNAL PLAN.

8. CONTRACTOR SHALL OBSERVE ALL INDUSTRY SAFETY STANDARDS, PARTICULARLY SECTION 2946 AND 2948 OF TITLE 8 OF CAL-OSHA REGARDING WORK NEAR OVERHEAD LINES.

9. SEE STREET LIGHTING SHEET FOR WORK ON STREET LIGHTING FACILITIES.

10. ALL CONTROLLER AND SIGNAL WORK SHALL BE COORDINATED WITH THE LADOT TRAFFIC SIGNAL INSPECTOR.

11. CONTRACTOR SHALL CONTACT THE LADOT SOUTHERN YARD TRAFFIC SIGNAL INSPECTOR AT (213) 332-1648, AT LEAST FIFTEEN (15) WORKING DAYS PRIOR TO THE START OF CONSTRUCTION.

12. CONTRACTOR SHALL NOT POSSESS ANY CONTROLLER EQUIPMENT OR ACCESS THE ACTIVE CONTROLLER CABINET WITHOUT THE LADOT TRAFFIC SIGNAL INSPECTOR PRESENT.

13. CONTRACTOR SHALL CONTACT THE TRAFFIC CONSULTANT FOR ANY PROBLEMS ENCOUNTERED DURING CONSTRUCTION; THE TRAFFIC CONSULTANT SHALL CONTACT THE LADOT PERMIT PLAN REVIEW SECTION FOR RESOLUTION OF SIGNAL RELATED CONSTRUCTION PROBLEMS.

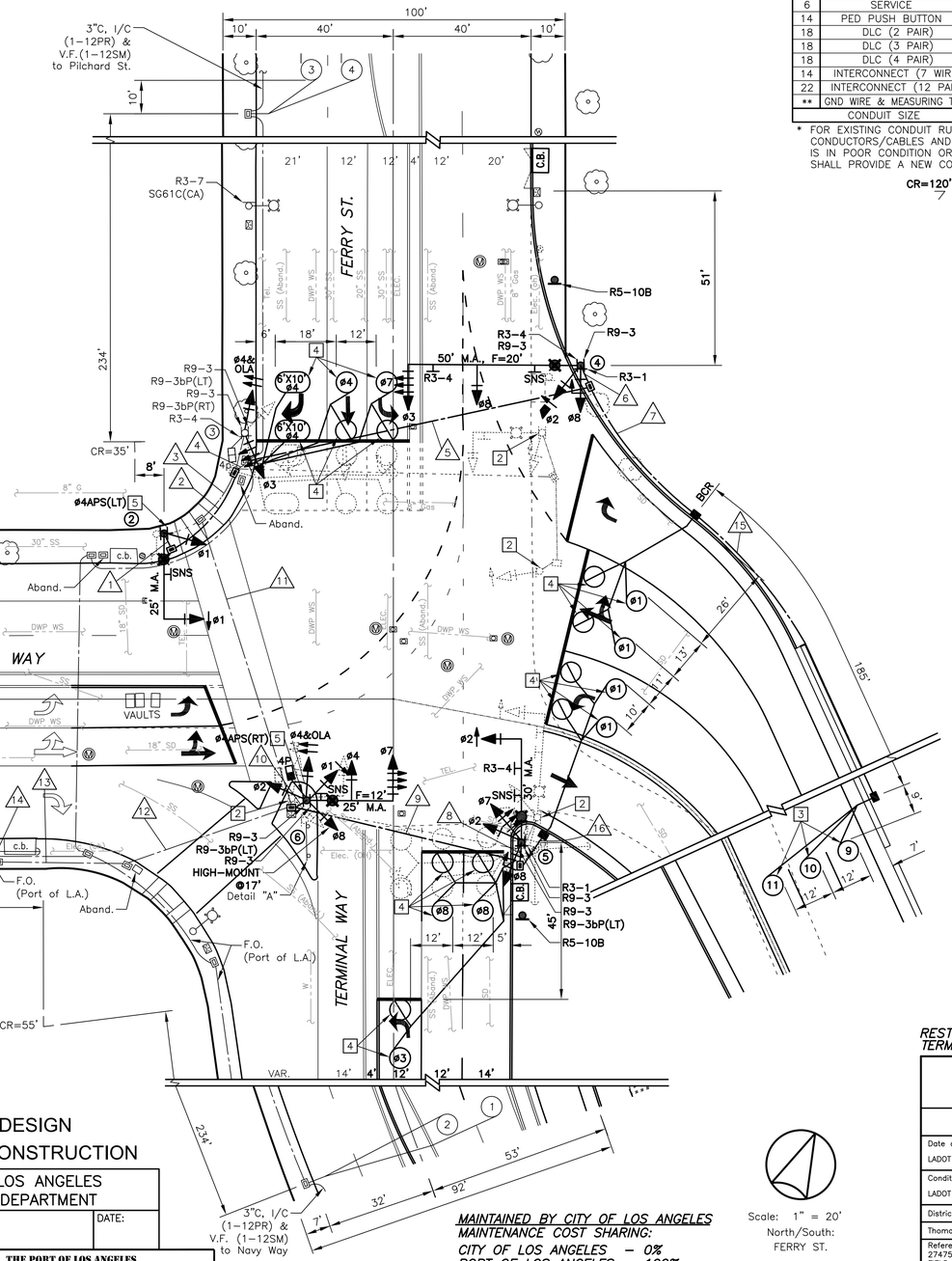

DETAIL "A"
NOT TO SCALE

1" = 20' ORIGINAL MAPS SCALE
1" = 40'
30 METERS (Approx.) 100 FEET
200 METERS (Approx.) 600 FEET

MAINTAINED BY CITY OF LOS ANGELES
MAINTENANCE COST SHARING:
CITY OF LOS ANGELES – 0%
PORT OF LOS ANGELES – 100%

Scale: 1" = 20'
North/South: FERRY ST.

NOTICE TO CONTRACTOR

1. EXCEPT WHERE OTHERWISE INDICATED, MATERIALS AND INSTALLATION METHODS SHALL CONFORM TO THE LATEST EDITION, WITH SUPPLEMENTS, OF THE STANDARD SPECIFICATIONS FOR PUBLIC WORKS CONSTRUCTION, ADOPTED BY THE CITY OF LOS ANGELES BOARD OF PUBLIC WORKS (LABPW), INCLUDING THE LATEST VERSION OF THE "BROWN BOOK" ISSUED BY THE LABPW, AND THE LATEST EDITION, WITH AMENDMENTS, OF THE SPECIAL PROVISIONS AND STANDARD DRAWINGS FOR THE INSTALLATION AND MODIFICATION OF TRAFFIC SIGNALS, ISSUED BY THE CITY OF LOS ANGELES DEPARTMENT OF TRANSPORTATION (LADOT).

2. ALL TRAFFIC SIGNAL AND/OR RELATED ELECTRICAL WORK SHALL BE PERFORMED AND INSPECTED UNDER THE CONDITIONS OF THE MOST CURRENT AMENDED BOARD OF PUBLIC WORKS "ENHANCED ELECTRICAL SAFETY POLICY" AS REQUIRED IN LADOT'S SPECIAL PROVISIONS AND STANDARD DRAWINGS FOR THE INSTALLATION AND MODIFICATION OF TRAFFIC SIGNALS (RED BOOK), REGARDLESS OF CONTRACT COST.

3. THE LADOT TRAFFIC SIGNAL INSPECTOR AT (213) 332-1648 SHALL BE NOTIFIED THREE (3) WORKING DAYS PRIOR TO THE BEGINNING OF CONSTRUCTION. FOR WORK IN THE ADVANCED TRANSPORTATION SYSTEM AND COORDINATION (ATSAC) PROJECT AREA, A FIELD MEETING SHALL BE SCHEDULED WITH THE SIGNAL SYSTEMS SUPERVISOR AT (213) 473-8286 AND THE SIGNAL MAINTENANCE SUPERVISOR AT (213) 216-4678 THREE (3) WORKING DAYS PRIOR TO THE BEGINNING OF CONSTRUCTION. FULL RESTORATION OF THE ATSAC SYSTEM MUST OCCUR WITHIN FIVE (5) WORKING DAYS AFTER SHUT DOWN.

4. REGULAR TRAFFIC SIGNAL CONTROL SHALL BE MAINTAINED FROM 6:00 A.M. TO 9:00 A.M. AND 3:00 P.M. TO 7:00 P.M. ON WEEKDAYS, EXCEPT NATIONAL HOLIDAYS. FLASHING, DEACTIVATION, AND ACTIVATION OF SIGNALS SHALL BE ACCOMPLISHED ONLY BY A LADOT TRAFFIC SIGNAL ELECTRICIAN. ALL ARRANGEMENTS TO DEACTIVATE SIGNAL SHALL BE MADE 24 HOURS IN ADVANCE BY CONTACTING THE LADOT TRAFFIC SIGNAL DEDICATED LINE AT (213) 473-8478 BEFORE 9:00 AM ON NON-HOLIDAY WEEKDAYS. THE LADOT PROJECT NUMBER MUST BE GIVEN AT THIS TIME. THE CONTRACTOR WILL BE CHARGED FOR ALL ELECTRICAL AND TRAFFIC CONTROL SERVICE PROVIDED BY LADOT.

5. ARRANGEMENTS FOR OBTAINING ANY MATERIALS IDENTIFIED TO BE SUPPLIED BY LADOT SHALL BE MADE TEN (10) WORKING DAYS IN ADVANCE BY CONTACTING THE LADOT FIELD OPERATIONS DIVISION AT (213) 216-4677. HOWEVER, TRAFFIC SIGNAL CONTROLLERS REQUIRE SIXTY (60) WORKING DAYS ADVANCE NOTICE AND MUST BE PICKED UP WITHIN FIFTEEN (15) WORKING DAYS AFTER NOTIFICATION. CONTACT LADOT SIGNAL SHOP AT (213) 473-8468 TO COORDINATE CONTROLLER DELIVERY AND/OR PICKUP.

6. ALL IDENTIFIED TRAFFIC SIGNAL EQUIPMENT SHALL BE RETURNED TO LADOT. ARRANGEMENTS FOR RETURNING IDENTIFIED EQUIPMENT TO LADOT SHALL BE MADE FIVE (5) WORKING DAYS IN ADVANCE BY CONTACTING THE LADOT MATERIAL SERVICES DIVISION AT (213) 928-9636.

7. ALL EXISTING TRAFFIC CONTROL SIGNING SHALL BE MAINTAINED WITH STANDARD SIGN BRACKETS BY THE CONTRACTOR. EXCEPT WHERE OTHERWISE INDICATED, EXISTING LARGE STREET NAME SIGNS ON MAST ARM TYPE STANDARDS SHALL BE RELOCATED FROM THE VERTICAL POLE TO THE MAST ARM PER LADOT STANDARD DRAWING NO. S-457.0 AND S-486.0. THE CONTRACTOR SHALL COORDINATE WITH LADOT SIGN SHOP AT (213) 473-7954 FOR ANY REQUIRED LARGE STREET NAME SIGNS. ANY TRAFFIC CONTROL SIGNING DAMAGED OR LOST BY THE CONTRACTOR SHALL BE REPLACED AT THE CONTRACTOR'S EXPENSE. SIGNAL CONTRACTOR SHALL INSTALL MAST ARM MOUNTED SIGNS. FOR INSTALLATION OF A STREET NAME SIGN ON A TYPE 1 POLE, THE CONTRACTOR SHALL FURNISH AND INSTALL A POLE EXTENSION AS NEEDED.

8. THE CONTRACTOR SHALL FURNISH AND INSTALL, AS SHOWN ON THE PLANS, ALL TRAFFIC SIGNAL EQUIPMENT SUCH AS STANDARDS, MAST ARMS, SIGNAL HEADS, AND OTHER EQUIPMENT AS REQUIRED. ALL SUCH EQUIPMENT SHALL BE NEW. ALL VEHICLE HEAD EQUIPMENT SUPPLIED BY THE CONTRACTOR SHALL HAVE 1-1/2 INCH DIAMETER PIPE FIT MOUNTING HARDWARE, INCLUDING ALL TOP POST MOUNT HEADS. PEDESTRIAN HEAD MODULE REPLACEMENTS SHOWN ON THE PLAN SHALL REQUIRE A COMPLETE INSTALLATION, INCLUDING NEW PEDESTRIAN HEAD AND TERMINAL COMPARTMENT.

RESTORATION SIGNAL PLAN
TERMINAL ISLAND GRADE SEPARATION

REVIEWED _____ 20 _____
Transportation Engineer

ACCEPTED _____ 20 _____
Senior Transportation Engineer

AS BUILT
Date of Installation: _____
LADOT Inspector: _____
Condition As Of: _____
LADOT Engineer: _____
District SOUTHERN
Thomas Guide 824-E4
References
27475-SNPD1-072(AB)
FIELD CHECK (3/19/25)

CITY OF LOS ANGELES
DEPARTMENT OF TRANSPORTATION
LAURA RUBIO-CORNEJO, General Manager

TITLE
FERRY ST. & TERMINAL WY.

File Name **27475-2025** | Intersection No. **27475** | Project No.

NOTICE: IF THIS PLAN HAS NOT BEEN IMPLEMENTED WITHIN TWO (2) YEARS OF THE ACCEPTANCE DATE, IT MUST BE RESUBMITTED TO LADOT FOR REVIEW AND MAY REQUIRE A SUBSEQUENT ACCEPTANCE.

Pursuant to the State of California Professional Engineers Act, Business and Professional Code Section 6703, the Responsible Charge of Work for the Engineer of Record includes the investigation of site conditions necessary to support the design of professional engineering related work.

Prepared Under the Direction of:
FPL *FPL and Associates, Inc.*
Traffic • Transportation • Civil
30 Corporate Park, Suite 401
Irvine, California 92606
(949) 252-1688

NAME | RCE No. | DATE

REGISTERED PROFESSIONAL ENGINEER — ALEXANDER D. ZUPANSKI — No. C 59351 — Exp. 06-30-27 — CIVIL — STATE OF CALIFORNIA

REGISTERED PROFESSIONAL ENGINEER — ALEXANDER D. ZUPANSKI — No. TR 2400 — Exp. 06-30-27 — TRAFFIC — STATE OF CALIFORNIA

CITY OF LOS ANGELES BUSINESS TAX REGISTRATION NO: 217989-0001-1

80% DESIGN
NOT FOR CONSTRUCTION

CITY OF LOS ANGELES
HARBOR DEPARTMENT
APPROVED: | DATE:

THE PORT OF LOS ANGELES
ENGINEERING DIVISION
425 S. PALOS VERDES STREET SAN PEDRO CA 90731-3309

SCALES	HORIZ. 1"= 20'	SHEET OF	INDEX NUMBER
	VERT. 1"= NONE		

(LADOT Revised 6/04)
(Drafting Std. 11/04)

POLA SHEET NO. E-SS-05

NO.	REVISION DESCRIPTION	DIV./DIST. ENGR. DATE	CHECKED	DESIGNER	SR. DRAFTING	DRAFTING	FIELD	BASE	BY	DATE

	BY	DATE
TIMING		
DISTRICT		
GEOMETRIC		
ATSAC		
METRO RAIL		
ATMS		

DESIGN

Drawing File: D:\DOT\ACCDocs\Jacobs\US CA_d3391901_POLA Terminal Island GS\Project Files\30 PROJECT DATA\PW\TRAFFIC\Drawings\1-3497 TS.dwg
Sheet Name: TS / Updated On: Aug. 8, 2025 - 6:51PM / By: kevin.miller / Plotted On: Aug. 15, 2025 - 7:44AM / By: Kevin Miller

GENERAL NOTES :

1. WORK SHALL COMPLY WITH THE LATEST EDITION OF THE LOS ANGELES ELECTRICAL CODE (LAEC) AND ALL OTHER APPLICABLE FEDERAL STATE AND LOCAL CODES. WHERE THE PLANS SHOW MORE RESTRICTIVE RE UIREMENTS, THE PLANS SHALL GOVERN. NOTHING ON THESE PLANS SHALL BE INTERPRETED AS AUTHORITY TO VIOLATE ANY CODE OR REGULATION.
2. CIRCUIT BREAKERS, FUSES AND ELECTRICAL E UIPMENT SHALL HAVE AN INTERRUPTING RATING NOT LESS THAN THE MAXIMUM SHORT CIRCUIT CURRENT TO WHICH THEY MAY BE SUB ECTED.
3. MATERIALS AND E UIPMENT SHALL BE NEW AND SHALL BEAR THE UNDERWRITERS' LABORATORIES INC (UL) LABEL AND SHALL BE INSTALLED IN THE MANNER FOR WHICH IT IS DESIGNED AND APPROVED. ELECTRICAL E UIPMENT SHALL BE LISTED BY A CITY OF LOS ANGELES RECOGNIZED ELECTRICAL TESTING LABORATORY OR APPROVED BY THE DEPARTMENT.
4. DEVICES INSTALLED OUTSIDE OR IN DAMP LOCATIONS SHALL BE APPROVED WEATHERPROOF.
5. FEEDER CONDUCTORS AND BRANCH CIRCUIT WIRING SHALL BE TYPE THHN/THWN COPPER. WIRE SHALL BE UL LISTED, RATED FOR 600 VOLTS, NO 10 AWG MINIMUM SIZE UNLESS NOTED OTHERWISE.
6. INSTALL CONDUITS AND WIRES WITH A MINIMUM NUMBER OF BENDS AND IN SUCH A MANNER AS TO CONFORM TO THE STRUCTURE. AVOID OBSTRUCTIONS, PRESERVE HEAD ROOM KEEP OPENINGS AND PASSAGEWAYS CLEAR AND MEET STRUCTURAL CODE RE UIREMENTS.
7. DO NOT BORE, NOTCH OR IN ANY WAY CUT INTO ANY STRUCTURAL MEMBER.
8. PROVIDE SUPPORT FOR FIXTURES AND ELECTRICAL E UIPMENT TO COMPLY WITH THE SEISMIC RE UIREMENTS OF THE UNIFORM BUILDING CODE AND LOCAL ORDINANCES.
9. PROVIDE POWER CONNECTIONS TO E UIPMENT, THAT RE UIRE POWER CONNECTIONS.
10. SEAL ELECTRICAL CONDUIT ENTERING AREAS OF TEMPERATURE CHANGE BY TYPE FITTINGS TO PREVENT AIR MIGRATION AND CONDENSATION.
11. THE ENTIRE ELECTRICAL INSTALLATION SHALL BE GROUNDED AS RE UIRED BY CODES AND THE SERVING UTILITY.
12. THE ENTIRE WIRING SYSTEM SHALL BE TESTED FOR SHORT CIRCUITS, GROUNDS AND INSULATION RESISTANCE BETWEEN CONDUCTORS AND TO GROUND.
13. FURNISH AND INSTALL CONDUITS, WIRES, BOXES, SWITCHES, LIGHT FIXTURES (WITH LAMPS), RECEPTACLES, SERVICE DEVICES, AND PANEL BOARDS RE UIRED FOR A COMPLETE AND OPERATIONAL ELECTRICAL SYSTEM. STARTERS, FUSED DISCONNECTS, BREAKERS, FUSES, CONTACTORS, SWITCHES, -BOXES, CONDUITS, CONDULETS AND WIRES THAT ARE NOT SUPPLIED BY THE E UIPMENTMANUFACTURER IN A PREWIRED PANEL ARE BY THE CONTRACTOR UNLESS OTHERWISE NOTED.
14. VERIFY EXISTING SITE CONDITIONS, VERIFY SERVICE E UIPMENT RE UIREMENTS WITH LOS ANGELES DEPARTMENT OF WATER AND POWER AND AT&T TELEPHONE COMPANY FOR EXACT LOCATIONS OF SERVICE FACILITIES BEFORE SUBMITTING BID.
15. RECEIVE, STORE AND INSTALL ELECTRICAL ITEMS FURNISHED BY THE DEPARTMENT.
16. THE ELECTRICAL DRAWINGS ARE DIAGRAMMATIC AND DO NOT SHOW OFFSETS, BENDS, FITTINGS, UNCTION BOXES, PULL BOXES AND EXPANSION FITTINGS RE UIRED TO MEET FIELD CONDITIONS. DETERMINE ACTUAL MATERIAL AND HARDWARE RE UIREMENTS AND VERIFY DIMENSIONS BY FIELD INSPECTION.
17. MINIMUM DEPTH OF DIRECT BURIAL AND CONCRETE ENCASED CONDUIT SHALL BE 3'-6" FROM FINISHED SURFACE UNLESS OTHERWISE NOTED.
18. COORDINATE FINAL LOCATION OF ELECTRICAL CONDUITS AND OTHER UTILITIES.
19. ELECTRICAL E UIPMENT AND DEVICES INSTALLED OUTDOORS SHALL BE ENCLOSED IN WEATHERPROOF, CORROSION RESISTANT, HOT DIPPED GALVANIZED NEMA 3R ENCLOSURES. HARDWARE SHALL BE HOT DIP GALVANIZED OR STAINLESS STEEL.
20. UNDERGROUND CONDUIT SHALL BE NON METALLIC SCHEDULE 40 PVC. UNDERGROUND CONDUIT BENDS AND PVC CONDUIT OINTS SHALL BE NON METALLIC SCHEDULE 80 PVC.
21. NO PIPING, DUCTS OR E UIPMENT FOREIGN TO ELECTRICAL E UIPMENT SHALL BE PERMITTED TO BE LOCATED WITHIN THE DEDICATED SPACE ABOVE THE ELECTRICAL E UIPMENT.
22. COORDINATE WORK AREA WITH PORT OF LOS ANGELES AND THE ENGINEER TO MINIMIZE OPERATIONAL IMPACTS DURING CONSTRUCTION. TRAFFIC CONTROL SHALL BE IN ACCORDANCE WITH THE LATEST WORK AREA TRAFFIC CONTROL HANDBOOK (WATCH).

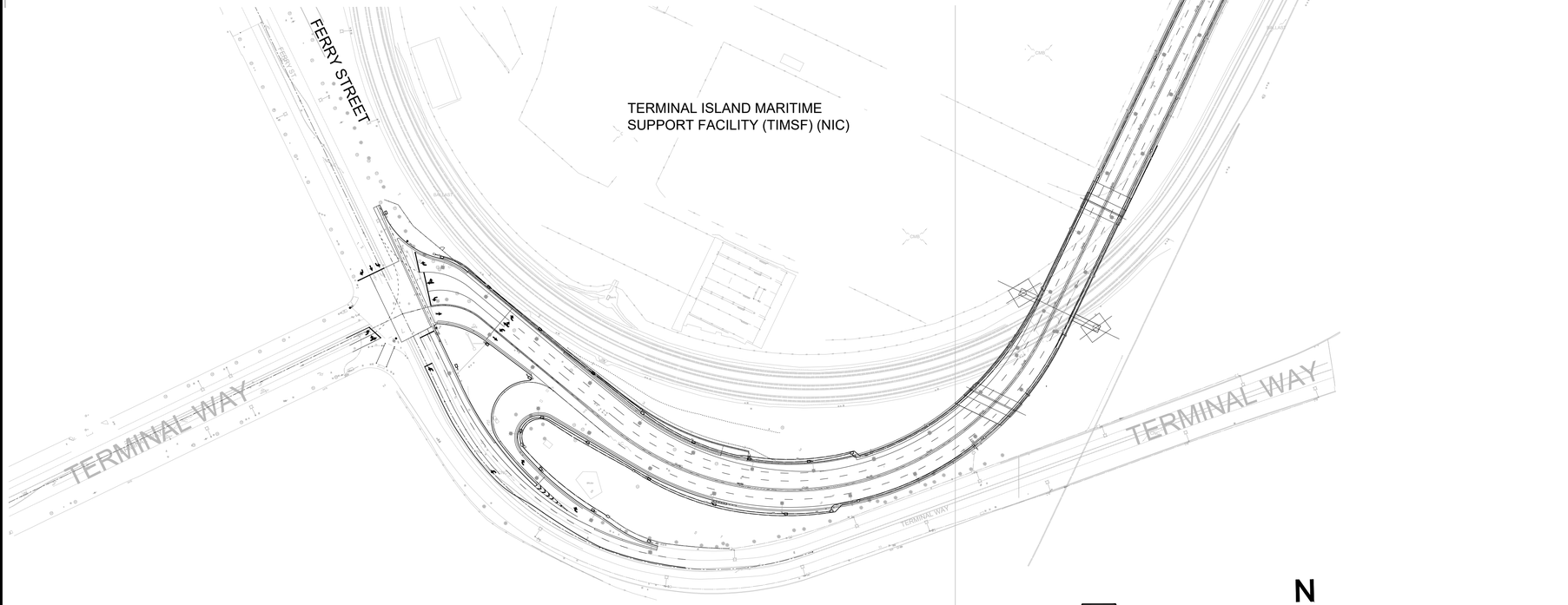

1E-00 / E-00 PLAN
SCALE: 1" = 100'

N

100' 0'-0" 100' 200'
SCALE: 1" = 100'

CONSTRUCTION NOTES

LEGEND OF CONSTRUCTION NOTES

- COORDINATE
- CONSTRUCT
- EXISTING
- REMOVE
- NOT IN CONTRACT (NIC)
- REMODEL EXISTING
- REMOVE & CONSTRUCT
- RELOCATE
- ABANDON

N .	CONSTRUCTION ITEM	REFERENCE DWG
300	SOFFIT LIGHTS (SEE NOTE 3)	
301	IRRIGATION CONTROLLER (SEE NOTE 5)	
302	SOLAR POWERED STREET LIGHTS (SEE NOTE 4)	
303	ELECTRICAL PULL BOX (SEE NOTE 4)	
304	NEW SPARE 3" FIBER CONDUIT WITH PULL WIRE (SEE NOTE 1)	
305	NEW SPARE 2" POWER CONDUIT WITH PULL WIRE (SEE NOTE 6)	
306	NEW SPARE 2" POWER CONDUIT WITH PULL WIRE (SEE NOTE 2)	
307	FIBEROPTIC PULL BOX TYPE 9	CALTRANS ES-9C
308	FIBEROPTIC PULL BOX TYPE 5	CALTRANS ES-9C

ABBREVIATIONS

BSL	BUREAU OF STREET LIGHTING
C	CONDUIT
CO	CONDUIT ONLY
DWG	DRAWING
EX	EXISTING
KR	K-RAIL
LP	LIGHT POLE
NEC	NATIONAL ELECTRICAL CODE
NEMA	NATIONAL ELECTRICAL MANUFACTURERS ASSOCIATION
MISC	MISCELLANEOUS
NO OR	NUMBER
NTS	NOT TO SCALE
PVC	POLYVINYL CHLORIDE
THHN	THERMOPLASTIC, HIGH-HEAT RESISTANT, NYLON COATED WIRE
THWN	THERMOPLASTIC, HIGH-HEAT & WATER RESISTANT NYLON COATED WIRE
TYP	TYPICAL
UON	UNLESS OTHERWISE NOTED
UL	UNDERWRITERS LABORATORIES INC.
V	VOLTAGE
VA	VOLT-AMPERES
W	WATT

SHEET ___ --- ___ OF 400

NO.	DATE	DRAWN	REVISIONS -	CHK'D	APP'D
			NOT FOR CONSTRUCTION		

NO.	DATE	DRAWN	REVISIONS -	CHK'D	APP'D
			80% DESIGN		

Jacobs
2600 MICHELSON DRIVE, SUITE 500
IRVINE, CA 92612
T: (949) 224-7500
F: (949) 224-7501

SCALE: 1"=100'
DRAWN: R. SHARMA
CHECKED: A. MATHEWS
DESIGNED: K. RAUT
ENGINEER / ARCHITECT

TERMINAL ISLAND GRADE SEPARATION

ELECTRICAL KEY PLAN & NOTES

THE PORT OF LOS ANGELES
ENGINEERING DIVISION
425 S. PALOS VERDES STREET SAN PEDRO CA 90731-3309

DRAWING NUMBER 1-3497
SHEET NUMBER E-00

POLAPR01_042023_BWD

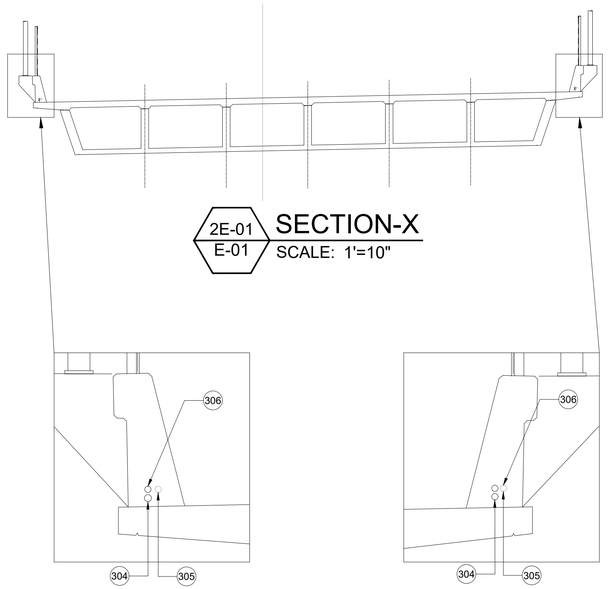

2E-01
E-01
SECTION-X
SCALE: 1'=10"

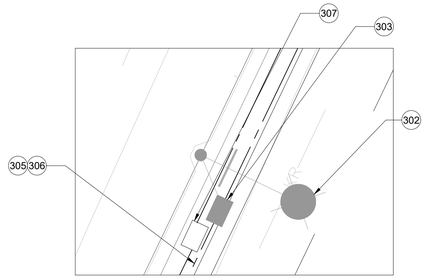

3E-01
E-01
ENLARGE PLAN
SCALE: 1'=10"

TERMINAL ISLAND MARITIME
SUPPORT FACILITY (TIMSF) (NIC)

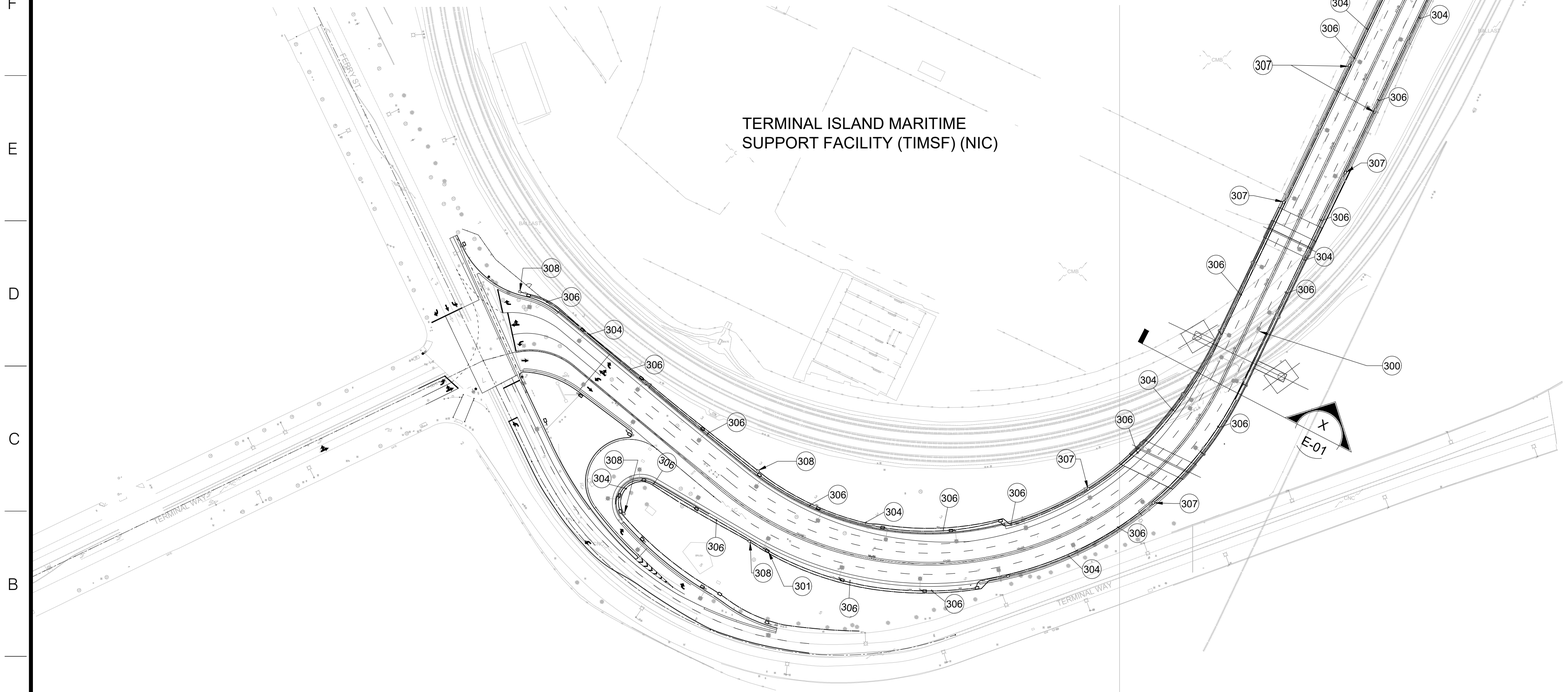

E 0
E 0
PLAN
SCALE: 1"=100'

N

100' 0'-0" 100' 200'
SCALE: 1" = 100'

CONSTRUCTION NOTES

LEGEND OF CONSTRUCTION NOTES	
COORDINATE	
CONSTRUCT	REMODEL EXISTING
EXISTING	REMOVE & CONSTRUCT
REMOVE	RELOCATE
NOT IN CONTRACT (NIC)	ABANDON

N .	CONSTRUCTION ITEM	REFERENCE DWG
300	SOFFIT LIGHTS (SEE NOTE 3)	
301	IRRIGATION CONTROLLER (SEE NOTE 5)	
302	SOLAR POWERED STREET LIGHTS (SEE NOTE 4)	
303	ELECTRICAL PULL BOX (SEE NOTE 4)	
304	NEW SPARE 3" FIBER CONDUIT WITH PULL WIRE (SEE NOTE 1)	
305	NEW SPARE 2" POWER CONDUIT WITH PULL WIRE (SEE NOTE 6)	
306	NEW SPARE 2" POWER CONDUIT WITH PULL WIRE (SEE NOTE 2)	
307	FIBEROPTIC PULL BOX TYPE 9	CALTRANS ES-9C
308	FIBEROPTIC PULL BOX TYPE 5	CALTRANS ES-9C

KEY NOTES :

1. CONTRACTOR TO INSTALL (1) 3"C FOR FIBER THROUGH THE CONCRETE BARRIER ON BOTH SIDES OF THE BRIDGE. REFER SHEET S-19, DETAIL 1S-19 FOR ADDITIONAL DETAILS.
2. CONTRACTOR TO INSTALL (1) 2"C FOR POWER THROUGH THE CONCRETE BARRIER ON BOTH SIDES OF THE BRIDGE. REFER TO SHEET S-19, DETAIL 1S-19 FOR ADDITIONAL DETAILS. CONTRACTOR TO TERMINATE CONDUIT WITHIN THE ELECTRICAL PULL BOXES LOCATED NEAR TO THE STREET LIGHT.
3. FOR REFERENCE ONLY, REFER TO SHEET EL-04 FOR ADDITIONAL DETAILS.
4. FOR REFERENCE ONLY, FOR ADDITIONAL DETAILS REFER TO SHEET EL-06, DETAIL 1EL-06 - STREET LIGHT POLE INSTALLATION DETAIL.
5. FOR REFERENCE ONLY, FOR ADDITONAL DETAILS REFER TO SHEET LI-02, DETAIL 1LI-02 - IRRIGATION PLAN.
6. FOR REFERENCE ONLY, REFER TO SHEET EL-01, EL-02 AND EL-03 - STREET LIGHTING PLAN FOR CONDUIT ROUTING.



KEY MAP

N

SHEET ___ OF 400

NO.	DATE	DRAWN	REVISIONS -	CHK'D	APP'D
			NOT FOR CONSTRUCTION		

NO.	DATE	DRAWN	REVISIONS -	CHK'D	APP'D
			80% DESIGN		

Jacobs
2600 MICHELSON DRIVE, SUITE 500
IRVINE, CA 92612
T: (949) 224-7500
F: (949) 224-7501

SCALE:	1"=100'
DRAWN:	R. SHARMA
CHECKED:	A. MATHEWS
DESIGNED:	K. RAUT
	ENGINEER / ARCHITECT

TERMINAL ISLAND GRADE SEPARATION

ELECTRICAL SITE PLAN

THE PORT OF LOS ANGELES
ENGINEERING DIVISION
425 S. PALOS VERDES STREET SAN PEDRO CA 90731-3309

DRAWING NUMBER	SHEET NUMBER
1-3497	E-01

LANDSCAPE NOTES

1. LANDSCAPE DRAWINGS REFLECT IMPROVEMENTS ASSOCIATED TO SITE DEVELOPMENT WITH REGARD TO DESCRIPTIONS OF PLANTING AND IRRIGATION ONLY.
2. REFER TO APPROPRIATE DISCIPLINES FOR OTHER ASSOCIATED SITE IMPROVEMENTS DESIGN AND DOCUMENTATION.
3. CONSULT WITH ENGINEER, SITE SUPERINTENDENT, APPROPRIATE AGENCIES AND AS BUILT CONSTRUCTION DOCUMENTATION FOR THE LOCATIONS OF UNDERGROUND UTILITIES, PIPES AND STRUCTURES. TAKE SOLE RESPONSIBILITY FOR ANY COST INCURRED DUE TO DAMAGE OF UTILITIES.
4. REPLACE ANY EXISTING MATERIALS THAT ARE DAMAGED DURING CONSTRUCTION AT NO ADDITIONAL COST TO THE PORT.
5. DO NOT WILLFULLY PROCEED WITH CONSTRUCTION AS DESIGNED WHEN IT IS OBVIOUS THAT UNKNOWN OBSTRUCTIONS, AREA DISCREPANCIES AND/OR GRADE DIFFERENCES EXIST THAT MAY NOT HAVE BEEN KNOWN DURING DESIGN. SUCH CONDITIONS SHALL BE IMMEDIATELY BROUGHT TO THE ATTENTION OF ENGINEER. ASSUME FULL RESPONSIBILITY FOR ALL NECESSARY REVISIONS DUE TO FAILURE TO GIVE SUCH NOTIFICATIONS.
6. COORDINATE WITH SUBCONTRACTORS AS RE UIRED TO ACCOMPLISH ALL CONSTRUCTION OPERATIONS. ALL DRAINLINES, IRRIGATION SUPPLY LINES, CONDUIT, SLEEVES, ETC. SHALL BE IN PLACE PRIOR TO INSTALLATION OF SITE LANDSCAPE CONSTRUCTION.
7. BRING TO ENGINEER'S ATTENTION ANY DISCREPANCIES AND/OR CONFLICTS THAT MIGHT EXIST IN THE CONTRACT DOCUMENTS FOR CLARIFICATION BEFORE PROCEEDING WITH WORK. TAKE FULL RESPONSIBILITY FOR ANY COSTS, CONSTRUCTION DELAYS, OR REVISIONS DUE TO FAILURE TO GIVE SUCH NOTIFICATIONS.
8. PLANT UANTITIES NOTED ON PLAN AREA FOR REFERENCE ONLY. CONTRACTOR SHALL VERIFY UANTITIES.
9. COORDINATE AND VERIFY TREE LOCATIONS AND UTILITY STRUCTURES WITH CIVIL EXISTING COMPOSITE UTILITY PLANS U-00 U-05 AND OR SUBSTRUCTURE PLANS PRIOR TO COMMENCING ANY WORK. TREE LOCATIONS MAY BE AD USTED IN THE FIELD UP TO A MAXIMUM OF 36" LONGITUDINALLY WHERE RE UIRED AND FEASIBLE TO CLEAR UNFORESEEN SITE CONDITIONS.
10. UNDERGROUND UTILITIES SHALL BE LOCATED BEFORE START OF WORK. FOR UTILITY LOCATIONS, SEE UTILITY SHEETS U-00 U-05.
11. GRADES SHALL BE APPROVED BY THE ENGINEER PRIOR TO INSTALLATION OF PLANT MATERIALS, PERFORM FINE GRADING IN PLANTING AREAS AND COORDINATE FINISH GRADE TO ALLOW MULCH DEPTH MATERIALS IN CONFORMANCE WITH SPECIFICATION
12. TREE AREA SHALL RECEIVE HERBICIDE TREATMENT AS PER SPEC. APPLICATION OF HERBICIDE PER THE REGULATIONS OF FEDERAL, STATE, LOCAL URISDICTIONS, AND ENVIRONMENTAL IMPACT REPORT.
13. ORDER PLANT MATERIAL AND COORDINATE WITH THE GROWERS IN ADVANCE TO ENSURE ADE UATE UANTITIES AND SIZES OF PLANT MATERIAL WILL BE AVAILABLE IN CONFORMANCE WITH DRAWINGS AND SPECIFICATIONS.
14. ALL TREES AND PLANTS SHALL CONFORM TO U.S.A. STANDARDS FOR NURSERY STOCK, ANSI Z60.
15. AFTER PLANTING IS COMPLETE, FURNISH AND SPREAD MULCH OVER ENTIRE PLANTED AREA IN CONFORMANCE WITH SPECIFICATIONS, UNLESS OTHERWISE NOTED ON DRAWINGS. PROVIDE THE AMOUNT OF MULCH NECESSARY TO COVER THE ENTIRE PLANTING AREA AND ALL AREAS NOT IDENTIFIED AS TURF, PAVING, OR RE-VEGETATION AREAS AS INDICATED ON DRAWINGS AND SPECIFICATIONS.
16. BE RESPONSIBLE FOR THE PLANT ESTABLISHMENT OF ENTIRE SITE FOR NINETY (90) CALENDAR DAYS FROM THE DATE OF ACCEPTANCE OF WORK. THIS INCLUDES, BUT IS NOT LIMITED TO WATERING, EDGING, TRIMMING, PRUNING, WEEDING, FERTILIZING, AND MAINTENANCE OF NEW PLANT MATERIAL IN HEALTHY GROWING CONDITIONS AND NEAT AND ATTRACTIVE IN APPEARANCE. REPLACE DEAD AND/OR DAMAGED PLANT MATERIAL ON A WEEKLY BASIS.

LANDSCAPE NOTES (CONTINUED)

17. PLANT MATERIAL OF SAME SPECIES SHALL BE FROM A SINGLE SOURCE.
18. MAKE FINISH GRADE SMOOTH, UNIFORM, AND FREE OF ABRUPT GRADE CHANGES AND DEPRESSIONS TO ENSURE SURFACE DRAINAGE.
19. FOR LAYOUT OF TREES AND MINIMUM CLEAR DISTANCES FROM OTHER INFRASTRUCTURE, REFER TO TREE SPACING RE UIREMENTS:

    WATER AND GAS METERS- 6 FEET
    DRIVEWAY APRONS AND CROSSWALKS- 8 FEET
    FIRE HYDRANTS- 10 FEET
    STREET LIGHTS- 20 FEET
    PEDESTRIAN LIGHTS- 15 FEET
    ELECTRICAL POWER POLES- 20 FEET
    INTERSECTIONS- 45 FEET (FROM POINT OF CURB LINE INTERSECT)
    RAILROAD TRACKS- 100 FEET

TREE PROTECTION NOTES

1. TREES TO BE SAVED SHALL BE FLAGGED AND MARKED PRIOR TO ANY CLEARING WORK
2. ALL PROTECTED TREES SHALL BE IRRIGATED DURING CONSTRUCTION.
3. NO STOCK PILING, TRENCHING FOR UTILITIES OR DRAINAGE, GRADING, OR SOIL COMPACTING SHALL BE ALLOWED WITHIN THE TREE DRIP LINE.
4. ALL SOLVENTS, FUELS AND CONSTRUCTION DEBRIS SHALL BE KEPT OUTSIDE OF THE TREE DRIP LINE.

EROSION CONTROL NOTES

1. INSTALL EROSION CONTROL MAT ON ALL SLOPE OVER 2:1. REFER TO SPECIFICATIONS FOR EROSION CONTROL MAT DETAILS. SEE CIVIL GRADING & PAVING SHEETS GP-00 GP-05 FOR SLOPE GRADIENT.

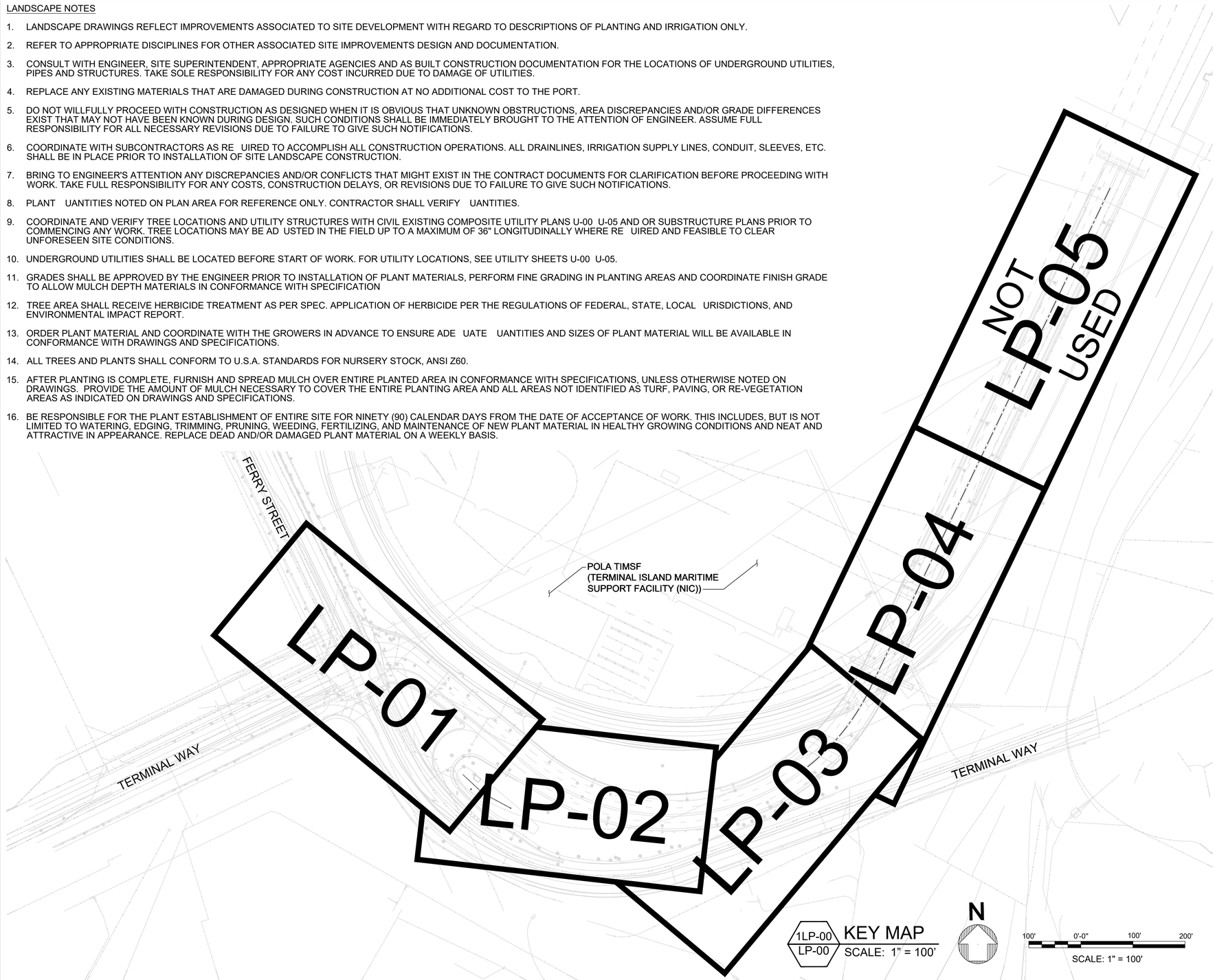

SHEET ____ OF 400

NO.	DATE	DRAWN	REVISIONS -	CHK'D	APP'D
			NOT FOR CONSTRUCTION		

NO.	DATE	DRAWN	REVISIONS -	CHK'D	APP'D
			80% DESIGN		

YKD
Landscape Architecture
Urban Design
2629 FOOTHILL BLVD., 204
LA CRESCENTA, CA 91214

SCALE: 1"=100'
DRAWN: Y. . KIM
CHECKED: Y. KIM
DESIGNED: Y. . KIM
ENGINEER / ARCHITECT

TERMINAL ISLAND GRADE SEPARATION

LANDSCAPE PLANTING - KEY MAP

THE PORT OF LOS ANGELES
ENGINEERING DIVISION
425 S. PALOS VERDES STREET SAN PEDRO CA 90731-3309

DRAWING NUMBER 1-3497
SHEET NUMBER LP-00

POLAPRO1_04/2023_BWD

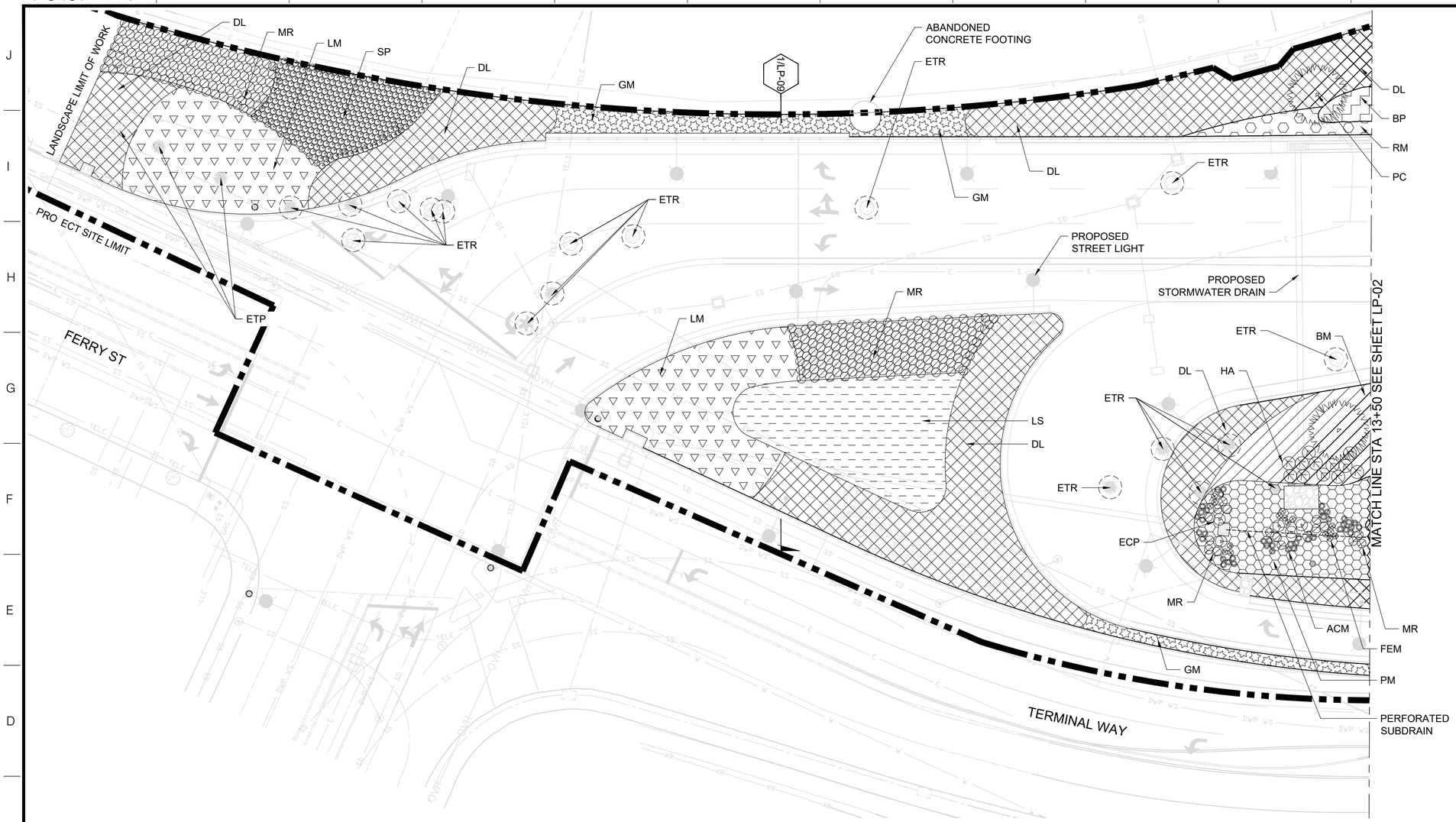

LP 0
LP 0

PLANTING PLAN
SCALE: 1"=20'

N

20' 0'-0" 20' 40'
SCALE: 1" = 20'

PLANTING SCHEDULE		
TREES		
SYMBOL	KEY	EXISTING TREES TO BE PROTECTED AND REMOVED
	ETR	EXISTING TREES TO BE REMOVED
	ETP	EXISTING TREES TO BE PROTECTED
TREES		
SYMBOL	KEY	SCIENTIFIC NAME
	AB	ACACIA BAILEYANA
	CH	CHITALPA
	KP	KOELREUTERIA PANICULATA
	PD	PARKINSONIA 'DESERT MUSEUM'
	PC	PINUS CANARIENSIS
SHRUBS & GRASSES		
SYMBOL	KEY	SCIENTIFIC NAME
	ACM	ACHILLEA MILLEFOLIUM
	ECP	ELYMUS CONDENSATUS 'CANYON PRINCE'
	FEM	FESTUCA MAIREI
	HA	HETEROMELES ARBUTIFOLIA
	MR	MUHLENBERGIA RIGENS
	SP	STIPA PULCHRA
GROUNDCOVERS		
SYMBOL	KEY	SCIENTIFIC NAME
	BP	BACCHARIS PILULARIS 'PIGEON POINT'
	DL	DELOSPERMA LITORALE
	LM	LANTANA MONTEVIDENSIS 'DALLAS RED'
	LS	LAVANDULA STOECHAS

NOTES
1. SEE SHEETS LP-00 FOR LANDSCAPE NOTES
2. SEE SHEET LP-06 FOR COMPLETE LIST OF PLANTING SCHEDULE
3. SEE UTILITY SHEETS U-00 U-06 FOR EXISTING UTILITY REMOVAL AND PROTECTION PLANS
4. SEE DEMOLITION AND REMOVAL SHEETS R-00 R-04 FOR EXISTING TREE TO BE REMOVED
5. SEE STREET LIGHTING SHEETS EL-00 EL-07 FOR STREET LIGHTING
6. SEE STORMWATER BMP SHEET SD-10 SD-12 FOR BIORETENTION BASIN

MATERIAL SCHEDULE		
SYMBOL	KEY	DESCRIPTION
	RM	ROCK MULCH
	BM	BARK MULCH
	GM	GRAVEL MULCH
	PM	PEBBLE MULCH

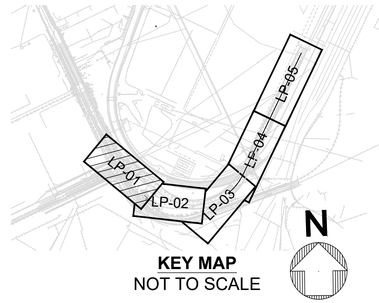

KEY MAP
NOT TO SCALE

SHEET ____ OF 400

NO.	DATE	DRAWN	REVISIONS -	CHK'D	APP'D
			NOT FOR CONSTRUCTION		

NO.	DATE	DRAWN	REVISIONS -	CHK'D	APP'D
			80% DESIGN		

YKD
Landscape Architecture
Urban Design
2029 FOOTHILL BLVD., 204
LA CRESCENTA, CA 91214

SCALE: 1"=20'
DRAWN: Y. . KIM
CHECKED: Y. KIM
DESIGNED: Y. . KIM
ENGINEER / ARCHITECT

TERMINAL ISLAND GRADE SEPARATION

PLANTING PLAN - 1

THE PORT OF LOS ANGELES
ENGINEERING DIVISION
425 S. PALOS VERDES STREET SAN PEDRO CA 90731-3309

DRAWING NUMBER 1-3497
SHEET NUMBER LP-01

POLAPROT_04/2023_BWD

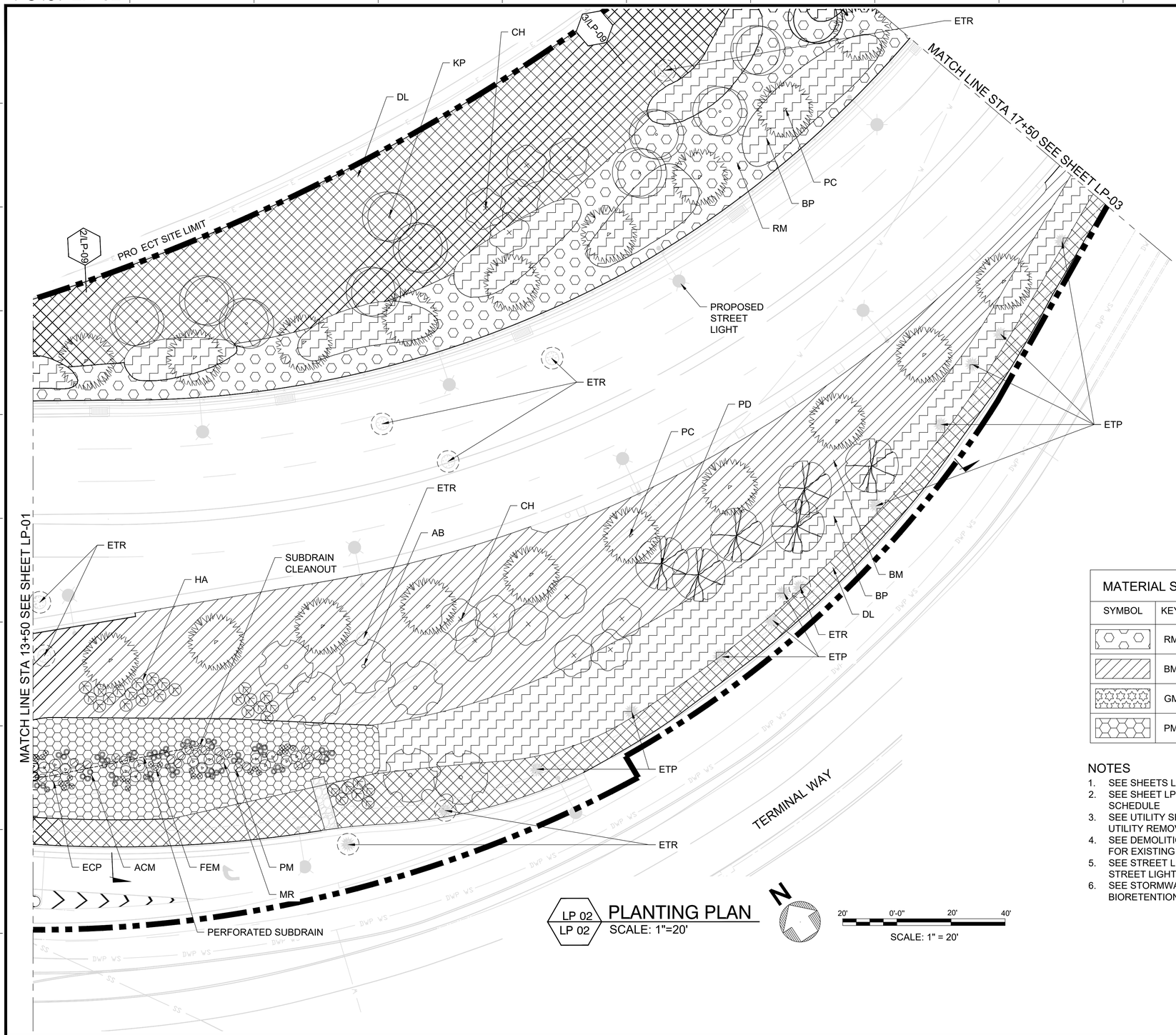

LP 02
LP 02
PLANTING PLAN
SCALE: 1"=20'

N

20' 0'-0" 20' 40'
SCALE: 1" = 20'

PLANTING SCHEDULE		
TREES		
SYMBOL	KEY	EXISTING TREES TO BE PROTECTED AND REMOVED
	ETR	EXISTING TREES TO BE REMOVED
	ETP	EXISTING TREES TO BE PROTECTED
TREES		
SYMBOL	KEY	SCIENTIFIC NAME
	AB	ACACIA BAILEYANA
	CH	CHITALPA
	KP	KOELREUTERIA PANICULATA
	PD	PARKINSONIA 'DESERT MUSEUM'
	PC	PINUS CANARIENSIS
SHRUBS & GRASSES		
SYMBOL	KEY	SCIENTIFIC NAME
	ACM	ACHILLEA MILLEFOLIUM
	ECP	ELYMUS CONDENSATUS 'CANYON PRINCE'
	FEM	FESTUCA MAIREI
	HA	HETEROMELES ARBUTIFOLIA
	MR	MUHLENBERGIA RIGENS
	SP	STIPA PULCHRA
GROUNDCOVERS		
SYMBOL	KEY	SCIENTIFIC NAME
	BP	BACCHARIS PILULARIS 'PIGEON POINT'
	DL	DELOSPERMA LITORALE
	LM	LANTANA MONTEVIDENSIS 'DALLAS RED'
	LS	LAVANDULA STOECHAS

MATERIAL SCHEDULE		
SYMBOL	KEY	DESCRIPTION
	RM	ROCK MULCH
	BM	BARK MULCH
	GM	GRAVEL MULCH
	PM	PEBBLE MULCH

NOTES
1. SEE SHEETS LP-00 FOR LANDSCAPE NOTES
2. SEE SHEET LP-06 FOR COMPLETE LIST OF PLANTING SCHEDULE
3. SEE UTILITY SHEETS U-00 U-06 FOR EXISTING UTILITY REMOVAL AND PROTECTION PLANS
4. SEE DEMOLITION AND REMOVAL SHEETS R-00 R-04 FOR EXISTING TREE TO BE REMOVED
5. SEE STREET LIGHTING SHEETS EL-00 EL-07 FOR STREET LIGHTING
6. SEE STORMWATER BMP SHEET SD-10 SD-12 FOR BIORETENTION BASIN

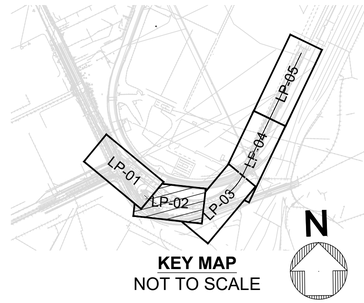

KEY MAP
NOT TO SCALE

SHEET ____ OF 400

NO.	DATE	DRAWN	REVISIONS -	CHK'D	APP'D
			NOT FOR CONSTRUCTION		

NO.	DATE	DRAWN	REVISIONS -	CHK'D	APP'D
			80% DESIGN		

YKD Landscape Architecture Urban Design
2629 FOOTHILL BLVD., 204
LA CRESCENTA, CA 91214

SCALE: 1"=20'
DRAWN: Y. . KIM
CHECKED: Y. KIM
DESIGNED: Y. . KIM
ENGINEER / ARCHITECT

TERMINAL ISLAND GRADE SEPARATION

PLANTING PLAN - 2

THE PORT OF LOS ANGELES
ENGINEERING DIVISION
425 S. PALOS VERDES STREET SAN PEDRO CA 90731-3309

DRAWING NUMBER 1-3497
SHEET NUMBER LP-02

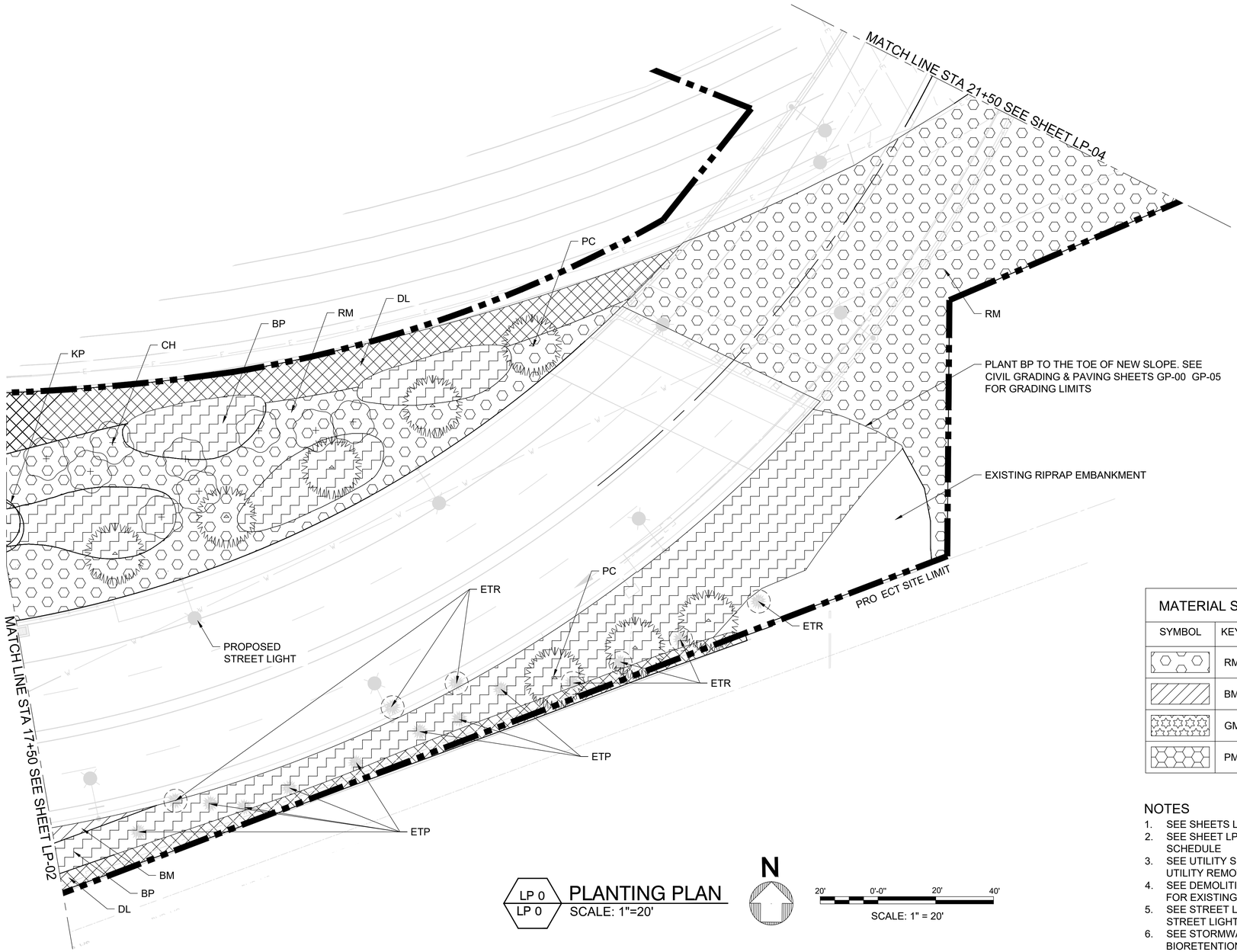

LP 0
LP 0 **PLANTING PLAN**
SCALE: 1"=20'

N

20' 0'-0" 20' 40'
SCALE: 1" = 20'

MATERIAL SCHEDULE

SYMBOL	KEY	DESCRIPTION
	RM	ROCK MULCH
	BM	BARK MULCH
	GM	GRAVEL MULCH
	PM	PEBBLE MULCH

PLANTING SCHEDULE

TREES

SYMBOL	KEY	EXISTING TREES TO BE PROTECTED AND REMOVED
	ETR	EXISTING TREES TO BE REMOVED
	ETP	EXISTING TREES TO BE PROTECTED

TREES

SYMBOL	KEY	SCIENTIFIC NAME
	AB	ACACIA BAILEYANA
	CH	CHITALPA
	KP	KOELREUTERIA PANICULATA
	PD	PARKINSONIA 'DESERT MUSEUM'
	PC	PINUS CANARIENSIS

SHRUBS & GRASSES

SYMBOL	KEY	SCIENTIFIC NAME
	ACM	ACHILLEA MILLEFOLIUM
	ECP	ELYMUS CONDENSATUS 'CANYON PRINCE'
	FEM	FESTUCA MAIREI
	HA	HETEROMELES ARBUTIFOLIA
	MR	MUHLENBERGIA RIGENS
	SP	STIPA PULCHRA

GROUNDCOVERS

SYMBOL	KEY	SCIENTIFIC NAME
	BP	BACCHARIS PILULARIS 'PIGEON POINT'
	DL	DELOSPERMA LITORALE
	LM	LANTANA MONTEVIDENSIS 'DALLAS RED'
	LS	LAVANDULA STOECHAS

NOTES

1. SEE SHEETS LP-00 FOR LANDSCAPE NOTES
2. SEE SHEET LP-06 FOR COMPLETE LIST OF PLANTING SCHEDULE
3. SEE UTILITY SHEETS U-00 U-06 FOR EXISTING UTILITY REMOVAL AND PROTECTION PLANS
4. SEE DEMOLITION AND REMOVAL SHEETS R-00 R-04 FOR EXISTING TREE TO BE REMOVED
5. SEE STREET LIGHTING SHEETS EL-00 EL-07 FOR STREET LIGHTING
6. SEE STORMWATER BMP SHEET SD-10 SD-12 FOR BIORETENTION BASIN

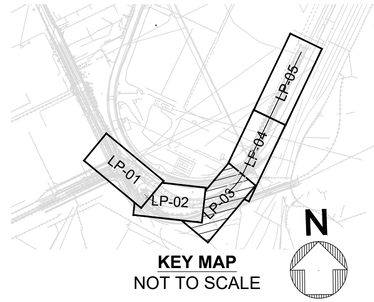

KEY MAP
NOT TO SCALE

SHEET ____ OF 400

NO.	DATE	DRAWN	REVISIONS -	CHK'D	APP'D
			NOT FOR CONSTRUCTION		

NO.	DATE	DRAWN	REVISIONS -	CHK'D	APP'D
			80% DESIGN		

YKD
Landscape Architecture
Urban Design
2629 FOOTHILL BLVD., 204
LA CRESCENTA, CA 91214

SCALE: 1"=20'
DRAWN: Y. . KIM
CHECKED: Y. KIM
DESIGNED: Y. . KIM
ENGINEER / ARCHITECT

TERMINAL ISLAND GRADE SEPARATION

PLANTING PLAN - 3

THE PORT OF LOS ANGELES
ENGINEERING DIVISION
425 S. PALOS VERDES STREET SAN PEDRO CA 90731-3309

DRAWING NUMBER 1-3497
SHEET NUMBER LP-03

POLAPRDT_04/2023_BWD

PRO ECT SITE LIMIT

MATCH LINE STA 21+50 SEE SHEET LP-03

MATCH LINE STA 26+00 SEE SHEET LP-05

RM

BRIDGE COLUMN, SEE STRUCTURAL SHEETS S-00 S-27 FOR DETAILS.

LP 0
LP 0 PLANTING PLAN
SCALE: 1"=20'

N

20' 0'-0" 20' 40'
SCALE: 1" = 20'

MATERIAL SCHEDULE		
SYMBOL	KEY	DESCRIPTION
	RM	ROCK MULCH
	BM	BARK MULCH
	GM	GRAVEL MULCH
	PM	PEBBLE MULCH

NOTES

1. SEE SHEETS LP-00 FOR LANDSCAPE NOTES
2. SEE SHEET LP-06 FOR COMPLETE LIST OF PLANTING SCHEDULE
3. SEE UTILITY SHEETS U-00 U-06 FOR EXISTING UTILITY REMOVAL AND PROTECTION PLANS
4. SEE DEMOLITION AND REMOVAL SHEETS R-00 R-04 FOR EXISTING TREE TO BE REMOVED
5. SEE STREET LIGHTING SHEETS EL-00 EL-07 FOR STREET LIGHTING
6. SEE STORMWATER BMP SHEET SD-10 SD-12 FOR BIORETENTION BASIN

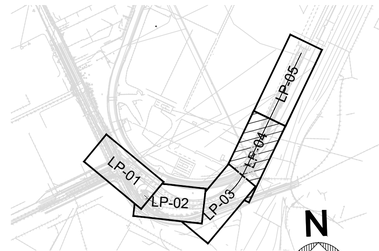

KEY MAP
NOT TO SCALE

SHEET ____ OF 400

NO.	DATE	DRAWN	REVISIONS -	CHK'D	APP'D
			NOT FOR CONSTRUCTION		

NO.	DATE	DRAWN	REVISIONS -	CHK'D	APP'D
			80% DESIGN		

YKD
Landscape Architecture
Urban Design
2629 FOOTHILL BLVD., 204
LA CRESCENTA, CA 91214

SCALE: 1"=20'
DRAWN: Y. . KIM
CHECKED: Y. KIM
DESIGNED: Y. . KIM
ENGINEER / ARCHITECT

TERMINAL ISLAND GRADE SEPARATION

PLANTING PLAN - 4

THE PORT OF LOS ANGELES
ENGINEERING DIVISION
425 S. PALOS VERDES STREET SAN PEDRO CA 90731-3309

DRAWING NUMBER 1-3497

SHEET NUMBER LP-04

PRO ECT SITE LIMIT

MATCH LINE STA 26+00 SEE SHEET LP-04

NOT USED

MATCH LINE STA 30+50 SEE "2LP-05" DETAIL

LP 0
LP 0

PLANTING PLAN
SCALE: 1"=20'

N

20' 0'-0" 20' 40'
SCALE: 1" = 20'

PRO ECT SITE LIMIT

MATCH LINE STA 30+50 SEE "1LP-05" DETAIL

NOT USED

STATION: 32+70 (T-3513)
SEE TIMS CONSTRUCTION BY OTHERS

2LP 0
LP 0

PLANTING PLAN
SCALE: 1"=20'

N

20' 0'-0" 20' 40'
SCALE: 1" = 20'

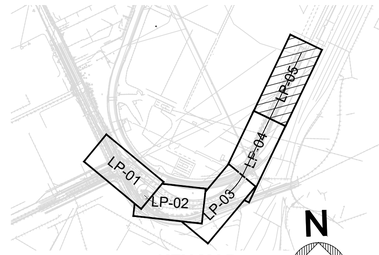

KEY MAP
NOT TO SCALE

SHEET ____ OF 400

NO.	DATE	DRAWN	REVISIONS -	CHK'D	APP'D
			NOT FOR CONSTRUCTION		

NO.	DATE	DRAWN	REVISIONS -	CHK'D	APP'D
			80% DESIGN		

YKD
Landscape Architecture
Urban Design
2629 FOOTHILL BLVD., 204
LA CRESCENTA, CA 91214

SCALE: 1"=20'
DRAWN: Y. , KIM
CHECKED: Y. KIM
DESIGNED: Y. , KIM
ENGINEER / ARCHITECT

TERMINAL ISLAND GRADE SEPARATION

PLANTING PLAN - 5

THE PORT OF LOS ANGELES
ENGINEERING DIVISION
425 S. PALOS VERDES STREET SAN PEDRO CA 90731-3309

DRAWING NUMBER 1-3497
SHEET NUMBER LP-05

POLAFRD1_04/2023_BWD

PLANTING SCHEDULE								
TREES								
SYMBOL	KEY	EXISTING TREES TO BE PROTECTED AND REMOVED	COMMON NAME	SIZE	SPACING	TY	WUCOLS	NOTES
	ETR	EXISTING TREES TO BE REMOVED	-	-	PER PLAN	33	-	-
	ETP	EXISTING TREES TO BE PROTECTED	-	-	PER PLAN	21	-	2/LP-08
TREES								
SYMBOL	KEY	SCIENTIFIC NAME	COMMON NAME	SIZE	SPACING	TY	WUCOLS	NOTES
	AB	ACACIA BAILEYANA	BAILEY ACACIA	24" BOX	PER PLAN	6	L	3/LP-06, 4/LP-06
	CH	CHITALPA	X CHITALPA TASHKENTENSIS	24" BOX	PER PLAN	22	L	3/LP-06, 4/LP-06
	KP	KOELREUTERIA PANICULATA	GOLDENRAIN TREE	24" BOX	PER PLAN	12	L	3/LP-06, 4/LP-06
	PD	PARKINSONIA 'DESERT MUSEUM'	DESERT MUSEUM PALO VERDE	36" BOX	PER PLAN	6	VL	3/LP-06, 4/LP-06
	PC	PINUS CANARIENSIS	CANARY ISLAND PINE	36" BOX	PER PLAN	27	L	3/LP-06, 4/LP-06
SHRUBS & GRASSES								
SYMBOL	KEY	SCIENTIFIC NAME	COMMON NAME	SIZE	SPACING	TY	WUCOLS	NOTES
	ACM	ACHILLEA MILLEFOLIUM	YARROW	1 GAL	24" OC	103	L	3/LP-07, 4/LP-07
	ECP	ELYMUS CONDENSATUS 'CANYON PRINCE'	CANYON PRINCE BLUE RYE	1 GAL	48" OC	21	L	3/LP-07, 4/LP-07
	FEM	FESTUCA MAIREI	ATLAS FESCUE	1 GAL	24" OC	41	L	3/LP-07, 4/LP-07
	HA	HETEROMELES ARBUTIFOLIA	TOYON	15 GAL	48" OC	42	VL	2/LP-07, 3/LP-07
	MR	MUHLENBERGIA RIGENS	DEER GRASS	1 GAL	36" OC	322	L	1/LP-07, 3/LP-07, 4/LP-07
	SP	STIPA PULCHRA	PURPLE NEEDLEGRASS	1 GAL	24" OC	403	VL	1/LP-07, 3/LP-07
GROUNDCOVERS								
SYMBOL	KEY	SCIENTIFIC NAME	COMMON NAME	SIZE	SPACING	TY (S FT)	WUCOLS	NOTES
	BP	BACCHARIS PILULARIS 'PIGEON POINT'	PIGEON POINT COYOTE BRUSH	5 GAL	48" OC	21,550	L	2/LP-07, 3/LP-07, 1/LP-08
	DL	DELOSPERMA LITORALE	WHITE TRAILING ICE PLANT	1 GAL	12" OC	31,430	L	1/LP-07, 2/LP-07, 3/LP-07
	LM	LANTANA MONTEVIDENSIS 'DALLAS RED'	DALLAS RED LANTANA	5 GAL	36" OC	4,400	L	1/LP-07, 3/LP-07
	LS	LAVANDULA STOECHAS	SPANISH LAVENDER	5 GAL	24" OC	2,510	L	1/LP-07, 3/LP-07

NOTE: FOR BP, ADD ROCK MULCH IN PLANTING AREA, SEE 1/LP-08 FOR DETAIL

LP 0 / LP 0 PLANTING LEGEND
SCLAE: NTS

MATERIAL SCHEDULE					
SYMBOL	KEY	DESCRIPTION	SIZE	TY (S FT)	NOTE
	RM	ROCK MULCH	-	51,800	REFER TO SPECS
	BM	BARK MULCH	-	18,030	REFER TO SPECS
	GM	GRAVEL MULCH	-	1,490	REFER TO SPECS
	PM	PEBBLE MULCH	-	5,770	REFER TO SPECS

2LP 0 / LP 0 MATERIAL LEGEND
SCLAE: NTS

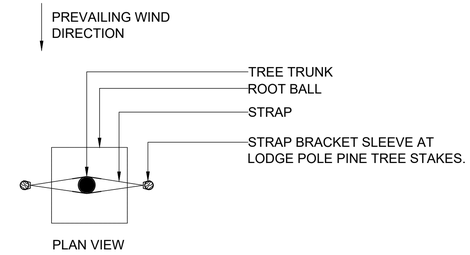

PLAN VIEW

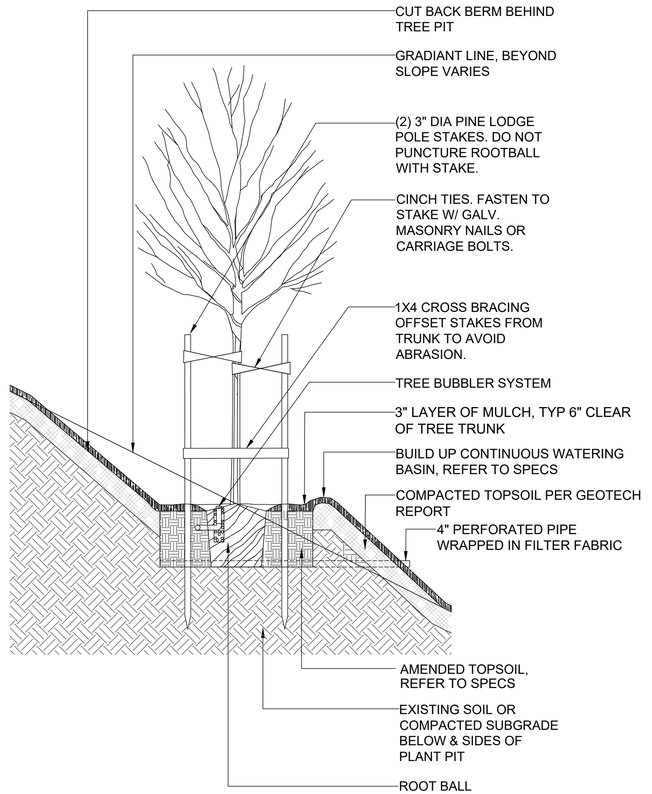

NOTES:
1. REFER TO TREE PLANTING, TYP. DETAIL FOR OTHER INFORMATION.
2. TREE STAKES TO BE LOCATED ON PREVAILING WIND DIRECTION.
3. NO STAKING OF TREES 48" AND LARGER

LP 0 / LP 0 0 TREE PLANTING ON SLOPE
SCALE: NTS

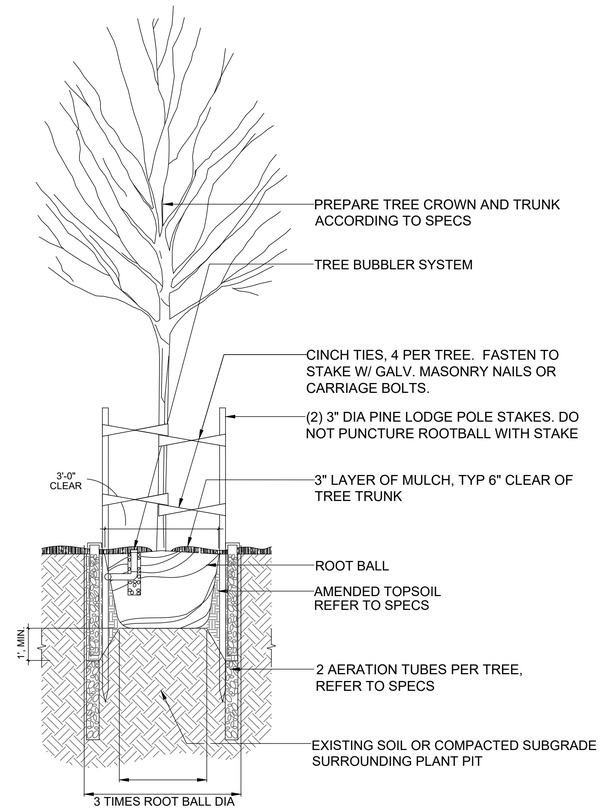

PROFILE VIEW

LP 0 / LP 0 02 TREE PLANTING T PICAL
SCALE: NTS

SHEET ---- OF 400

NO.	DATE	DRAWN	REVISIONS -	CHK'D	APP'D
			NOT FOR CONSTRUCTION		

NO.	DATE	DRAWN	REVISIONS -	CHK'D	APP'D
			80% DESIGN		

YKD Landscape Architecture Urban Design
2629 FOOTHILL BLVD., 204
LA CRESCENTA, CA 91214

SCALE: AS NOTED
DRAWN: Y. . KIM
CHECKED: Y. KIM
DESIGNED: Y. . KIM
ENGINEER / ARCHITECT

TERMINAL ISLAND GRADE SEPARATION

LANDSCAPE PLANTING SCHEDULE & DETAILS

THE PORT OF LOS ANGELES
ENGINEERING DIVISION
425 S. PALOS VERDES STREET SAN PEDRO CA 90731-3309

DRAWING NUMBER 1-3497
SHEET NUMBER LP-06

POLAPRDY_04/2023_BWD

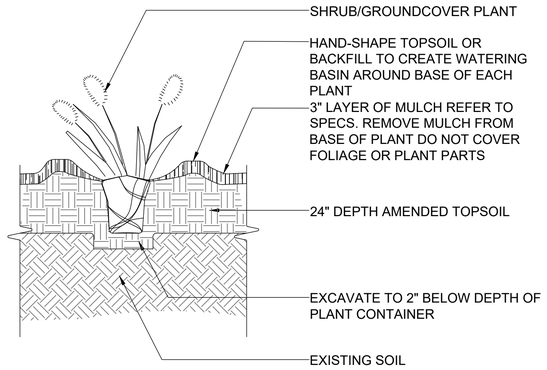

NOTES:
1. REMOVE CONTAINER BEFORE PLANTING COMPACT SOIL AROUND ROOT BALL.
2. THOROUGHLY SOAK PLANT WITH A FINE MIST AFTER INSTALLATION.

LP 0 / LP 0 0 — SHRUB GROUNDCO ER PLANTING
SCALE: NTS

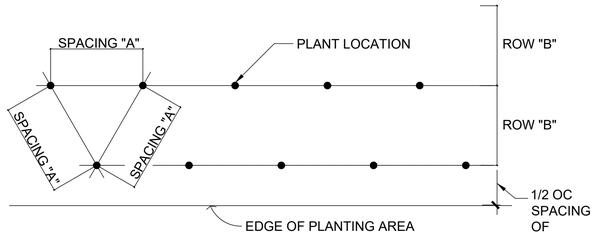

SPACING "A"	ROW SPACING "B"
12" OC	10 3/8" OC
18" OC	15 5/8" OC
24" OC	20 3/4" OC
36" OC	31 1/8" OC
48" OC	41 1/2" OC
60" OC	51 7/8" OC

LP 0 / LP 0 0 — SHRUB GROUNDCO ER SPACING
SCALE: NTS



REFERENCE IMAGE FOR PLANTING ON BIORETENTION BASIN

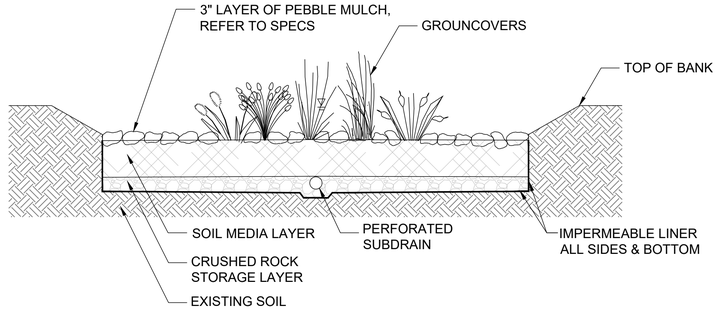

NOTES
1. SEE STORMWATER BMP SHEETS SD-10 SD-12 FOR BIORETENTION BASIN DETAILS
2. PLANT GROUNDCOVERS CLOSE TO THE LOWEST ELEVATION POINT IN THE ROCK LAYER
3. CONSULT WITH ENGINEER TO CONFIRM GROUNDCOVER PLANTING LOCATION DOES NOT IMPEDE STORMWATER MOVEMENT OR IMPACT DRAINAGE TO PERFORATED SUBDRAIN

LP 0 / LP 0 02 — GROUNDCO ER PLANTING ON BIORETENTION BASIN
SCALE: NTS

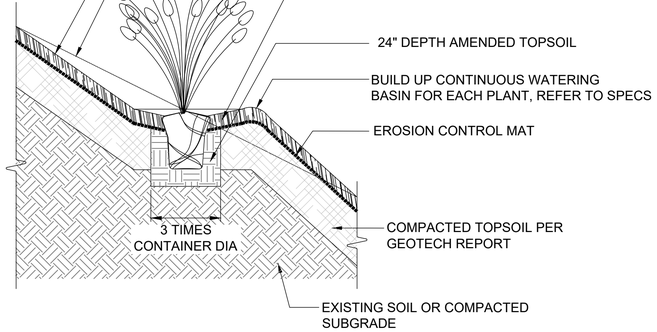

NOTES:
1. REMOVE CONTAINER BEFORE PLANTING
2. COMPACT SOIL AROUND ROOT BALL.
3. THOROUGHLY SOAK PLANT WITH A FINE MIST AFTER INSTALLATION.
4. FOR PLANTING IN THE EROSION CONTROL MAT, CUT X' IN THE EROSION CONTROL MAT WHERE PLANT WILL BE PLACED, PEEL BACK THE CORNERS, DIG A HOLE, PLACE PLANT IN THE HOLE AND FORM A WATERING BASIN AT THE DOWNSIDE OF THE SLOPE TO PREVENT RUNOFF

2LP 0 / LP 0 0 — SHRUB GROUNDCO ER PLANTING ON SLOPE
SCALE: NTS

SHEET ---- OF 400

NO.	DATE	DRAWN	REVISIONS -	CHK'D	APP'D
			NOT FOR CONSTRUCTION		

NO.	DATE	DRAWN	REVISIONS -	CHK'D	APP'D
			80% DESIGN		

YKD Landscape Architecture Urban Design
2629 FOOTHILL BLVD., 204
LA CRESCENTA, CA 91214

SCALE: AS NOTED
DRAWN: Y. . KIM
CHECKED: Y. KIM
DESIGNED: Y. . KIM
ENGINEER / ARCHITECT

TERMINAL ISLAND GRADE SEPARATION

LANDSCAPE DETAILS - 1

THE PORT OF LOS ANGELES
ENGINEERING DIVISION
425 S. PALOS VERDES STREET SAN PEDRO CA 90731-3309

DRAWING NUMBER 1-3497
SHEET NUMBER LP-07

POLAPRD1_042023_BWD

PLAN VIEW

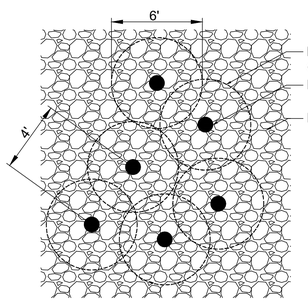

PROFILE VIEW

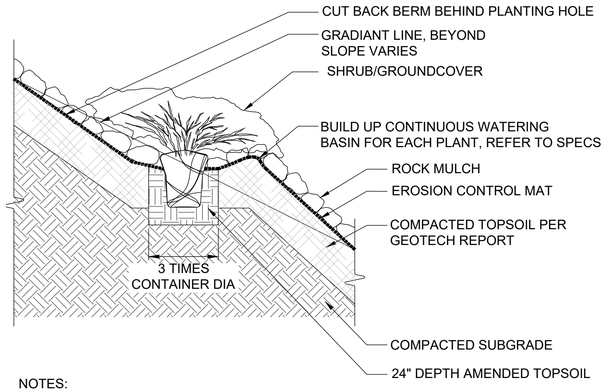

NOTES:
1. REMOVE CONTAINER BEFORE PLANTING
2. COMPACT SOIL AROUND ROOT BALL.
3. THOROUGHLY SOAK PLANT WITH A FINE MIST AFTER INSTALLATION.
4. FOR PLANTING IN THE EROSION CONTROL MAT, CUT `X' IN THE EROSION CONTROL MAT WHERE PLANT WILL BE PLACED, PEEL BACK THE CORNERS, DIG A HOLE, PLACE PLANT IN THE HOLE AND FORM A WATERING BASIN AT THE DOWNSIDE OF THE SLOPE TO PREVENT RUNOFF
5. PLANT GROUNDCOVER IN ADE UATE UANTITIES SO THE MATURE SPREAD OF BACCHARIS PILULARIS 'PIGEON POINT' CAN SUFFICIENTLY COVER THE PLANTING AREAS SPECIFIED IN PLANTING PLAN

LP 0 / LP 0 0 — GROUNDCO ER PLANTING ON ROCK MULCH
SCALE: NTS

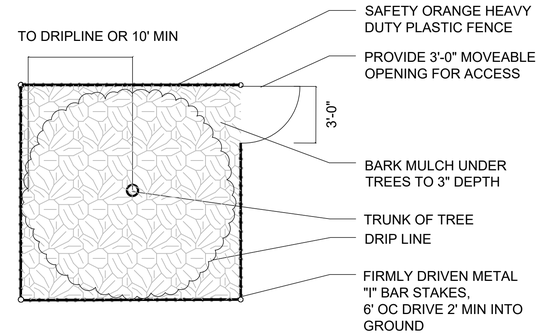

PROFILE VIEW

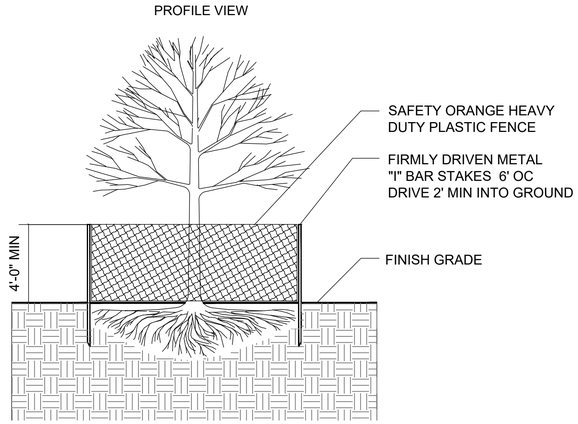

2LP 0 / LP 0 0 — TREE PROTECTION
SCALE: NTS

SHEET ---- OF 400

NO.	DATE	DRAWN	REVISIONS -	CHK'D	APP'D
			NOT FOR CONSTRUCTION		

NO.	DATE	DRAWN	REVISIONS -	CHK'D	APP'D
			80% DESIGN		

YKD Landscape Architecture Urban Design
2629 FOOTHILL BLVD., 204
LA CRESCENTA, CA 91214

SCALE: AS NOTED
DRAWN: Y. . KIM
CHECKED: Y. KIM
DESIGNED: Y. . KIM
ENGINEER / ARCHITECT

TERMINAL ISLAND GRADE SEPARATION

LANDSCAPE DETAILS - 2

THE PORT OF LOS ANGELES
ENGINEERING DIVISION
425 S. PALOS VERDES STREET SAN PEDRO CA 90731-3309

DRAWING NUMBER 1-3497
SHEET NUMBER LP-08

POLAPRDT_040320_BWD

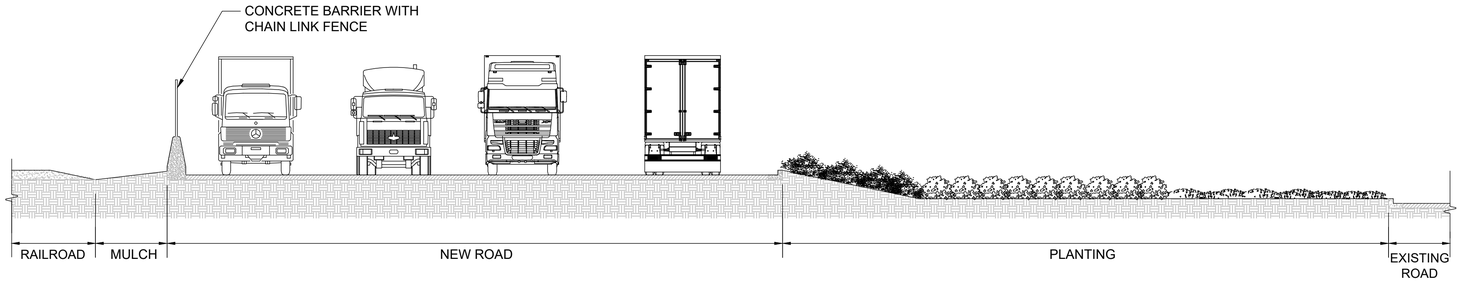

LP 0 / LP 0 **SECTION**
SCALE: 1-1/2"=1'-0"

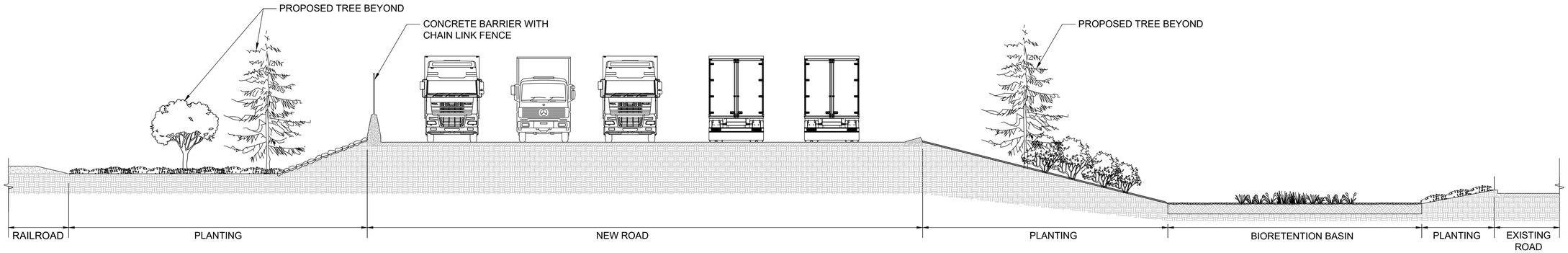

2LP 0 / LP 02 **SECTION 2**
SCALE: 1-1/2"=1'-0"

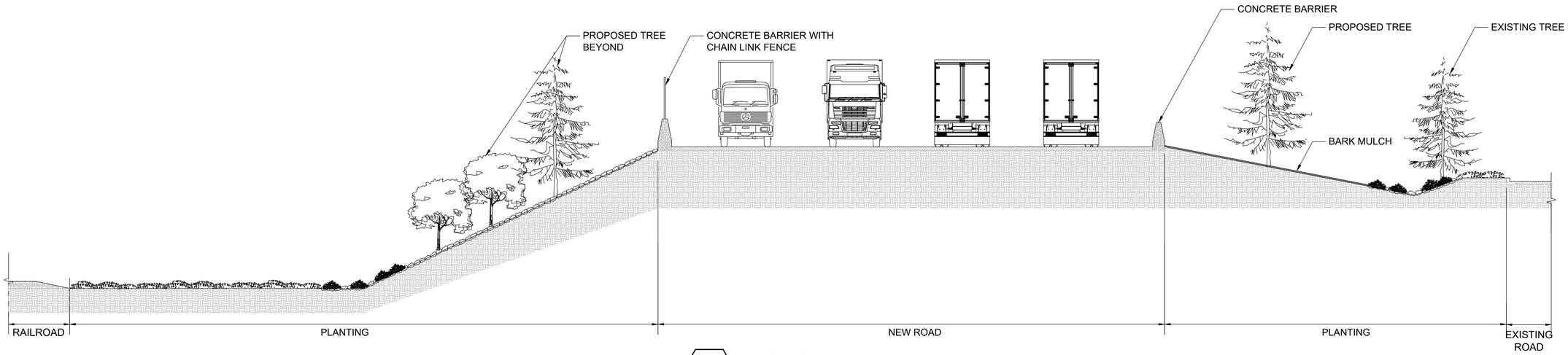

LP 0 / LP 02 **SECTION**
SCALE: 1-1/2"=1'-0"

SHEET ____ OF 400

NO.	DATE	DRAWN	REVISIONS -	CHK'D	APP'D
			NOT FOR CONSTRUCTION		

NO.	DATE	DRAWN	REVISIONS -	CHK'D	APP'D
			80% DESIGN		

YKD
Landscape Architecture
Urban Design
2629 FOOTHILL BLVD., 204
LA CRESCENTA, CA 91214

SCALE: AS NOTED
DRAWN: Y. , KIM
CHECKED: Y. KIM
DESIGNED: Y. , KIM
ENGINEER / ARCHITECT

TERMINAL ISLAND GRADE SEPARATION

LANDSCAPE SECTIONS

THE PORT OF LOS ANGELES
ENGINEERING DIVISION
425 S. PALOS VERDES STREET SAN PEDRO CA 90731-3309

DRAWING NUMBER 1-3497
SHEET NUMBER LP-09

POLAPRD1_04/2023_BWD

IRRIGATION NOTES

1. EXISTING UTILITIES AND CONDITIONS: PRIOR TO CUTTING INTO THE SOIL OR PAVING, LOCATE ALL CABLES, CONDUITS, AND OTHER UTILITIES COMMONLY FOUND UNDERGROUND, AND TAKE PROPER PRECAUTIONS NOT TO DAMAGE OR DISTURB SUCH IMPROVEMENTS. THE CONTRACTOR IS RESPONSIBLE FOR CONTACTING AN UNDERGROUND UTILITY LOCATING SERVICE TO LOCATE AND MARK ALL UTILITIES. IF A CONFLICT EXISTS BETWEEN SUCH OBSTACLES AND THE PROPOSED WORK, PROMPTLY NOTIFY THE CONTRACTING OFFICER WHO WILL ARRANGE FOR RELOCATIONS IF RE UIRED. PROCEED IN THE SAME MANNER IF ROCK LAYERS OR ANY OTHER CONDITIONS ENCOUNTERED UNDERGROUND MAKE CHANGES ADVISABLE.
2. THE INSTALLATION OF THE IRRIGATION SYSTEM SHALL CONFORM TO ALL APPLICABLE REGULATIONS AND CODES.
3. THE IRRIGATION SYSTEM IS SHOWN DIAGRAMMATICALLY FOR CLARITY. LOCATE ALL PIPING, E UIPMENT AND APPURTENANCES WITHIN THE PLANTING AREAS SHOWN UNLESS NOTED OR DIRECTED OTHERWISE. LOCATE ALL VALVES AND VALVE BOXES IMMEDIATELY AD ACENT TO EDGE OF PLANTING AREA AND AT RIGHT ANGLES TO EDGE. LOCATE UICK COUPLER VALVES AT THE EDGE OF PLANTING AREAS. LOCATE PRESSURE MAIN LINES WITHIN 18" OF EDGE OF PLANTING AREAS.
4. THE CONTRACTOR SHALL NOT WILLFULLY INSTALL THE IRRIGATION SYSTEM AS SHOWN ON THE DRAWINGS WHEN IT IS OBVIOUS IN THE FIELD, THAT OBSTRUCTIONS, GRADE DIFFERENCES OR DIFFERENCES IN THE AREA DIMENSIONS EXIST. SUCH OBSTRUCTIONS OR DIFFERENCES SHALL BE BROUGHT PROMPTLY TO THE ATTENTION OF THE CONTRACTING OFFICER. SHOULD THE CONTRACTOR FAIL TO NOTIFY THE CONTRACTING OFFICER OF ANY DISCREPANCIES, THEN THE CONTRACTOR SHALL BE RESPONSIBLE FOR ANY REVISIONS NECESSARY AT NO ADDITIONAL COST TO THE AGENCY.
5. ALL PIPE AND WIRING UNDER PAVING AND ROADWAYS SHALL BE SLEEVED. COORDINATE SLEEVE INSTALLATION WITH OTHER TRADES TO ENSURE PROPER AND TIMELY INSTALLATION IN LOCATIONS RE UIRED. SLEEVE TO BE TWICE (2X) THE DIAMETER OF THE CARRYING PIPE OR WIRE BUNDLE. PIPES MAY BE SLEEVED TOGETHER IF AN E UIVALENT INCREASE IN SLEEVE SIZE IS MADE. WIRE SLEEVES SHALL BE SEPARATE FROM WATER PIPE SLEEVES.
6. ALL BRASS PIPE AND FITTINGS TO BE IPS RED BRASS, STANDARD PIPE SIZE, SCHEDULE 40. ALL COPPER PIPE TO BE TYPE "K" COPPER.
7. USE TWO WRAPS OF 3/4" TEFLON TAPE FOR ALL THREADED CONNECTIONS.
8. AD UST ALL SPRAY HEADS TO AVOID OVERTHROW ONTO WALLS OR STREETS. AVOID UTILITY BOXES, TRANSFORMERS, ETC. ALL HEADS TO BE INSTALLED PERPENDICULAR TO FINISH SOIL SURFACE UNLESS SHOWN OTHERWISE ON PLANS.
9. DURING INSTALLATION ALL EXPOSED PIPE AND OINTS SHALL BE SHADED WHENEVER TEMPERATURES EXCEED 100 DEGREES FARENHEIT.
10. PROVIDE PULL BOXES FOR CONTROL WIRING AT ALL CHANGES OF DIRECTION AND WHERE RUNS EXCEED 200 FEET. SPLICES SHALL BE MADE ONLY IN PULL BOXES OR VALVE CONTROL BOXES.
11. WIRING IS BASED ON THE USE OF ONE 24 VOLT DC REMOTE CONTROL VALVE OPERATING AT ONE TIME. ALL WIRES SHALL BE LABELED AT THE TERMINAL STRIP WITHIN ONE INCH OF THE END OF THE WIRE WITH THE APPROPRIATE STATION NUMBER.
12. ANTI-DRAIN VALVES SHALL BE INSTALLED AS RE UIRED TO PREVENT ALL LOW HEAD DRAINAGE.
13. VARIABLE ARC NOZZLES SHALL ONLY BE USED WHERE SHOWN ON PLANS.
14. DURING THE FINAL CLOSEOUT PROCEDURES, NOZZLE CHANGES MAY BE RE UESTED AT NO ADDITIONAL EXPENSE TO THE AGENCY.
15. THE USE OF A MANUFACTURER'S NAME AND MODEL OR CATALOG NUMBER IS FOR THE PURPOSE OF ESTABLISHING THE STANDARD OF UALITY AND CONFIGURATION DESIRED ONLY. DESIGN OF IRRIGATION SYSTEM IS BASED ON THESE MATERIALS. IF OTHER E UIPMENT IS SUBSTITUTED, WITH APPROVAL, DESIGN RE UIREMENTS AND PIPE SIZES ARE TO BE AD USTED ACCORDINGLY.

IRRIGATION NOTES (CONTINUED)

16. SHOULD THE CONTRACTOR MAKE NOZZLE CHANGES OR ADD HEADS AS A RESULT OF SITE OBSTACLES OR CONSTRUCTION CHANGES, THEN THE CONTRACTOR SHALL BE RESPONSIBLE FOR CALCULATION AND AD USTMENTS IN PIPE SIZES.
17. MAXIMUM VELOCITY IN ALL PIPING, PRESSURE OR NON-PRESSURE TO BE 5 FEET PER SECOND.
18. UNLESS NOTED OTHERWISE ON PLANS, ALL LATERAL END RUNS TO SPRAY HEADS ARE TO BE 3/4 INCH SIZE.
19. CONTROLLER CHARTS AND AS-BUILTS ARE RE UIRED TO BE COMPLETE PRIOR TO BEGINNING THE MAINTENANCE PERIOD.
20. ALL PLANTINGS SHALL BE FULLY WATERED IN UPON PLANTING. DO NOT RELY SOLELY UPON THE AUTOMATIC IRRIGATION SYSTEM. UTILIZE SUPPLEMENTAL HOSE WATERING AS RE UIRED. INITIALLY AND DURING THE PLANT ESTABLISHMENT PERIOD, AND AS DIRECTED ON PLANS. TO ENSURE ALL PLANTINGS RECEIVE ADE UATE WATER TO THE ENTIRE ROOT ZONE.
21. ALL SPRINKLER HEADS SHALL BE AD USTED AS RE UIRED FOR HEIGHT, COVERAGE PATTERN, AND SPRINKLER HEAD ORIENTATION, TO PREVENT RESTRICTION OF SPRAY PATTERN BY PLANT MATERIAL.
22. THE IRRIGATION SYSTEM DESIGN IS BASED ON AN AVAILABLE WATER PRESSURE OF XXX TO XXX PSI AT THE POINT OF CONNECTION, REGULATED AT THE POINT OF CONNECTION AND AT VALVES AS RE UIRED TO PROVIDE THE OPERATING PRESSURE RE UIRED FOR THE HEADS.
23. THE CONTRACTOR IS RESPONSIBLE FOR VERIFYING WATER PRESSURE PRIOR TO ORDERING MATERIALS OR BEGINNING CONSTRUCTION AND PROMPTLY REPORT ANY DIFFERENCES.

2 . EACH REMOTE CONTROL AL E OR PAIR OF CONTROL AL ES FOR CONTROLLER A SHALL BE INSTALLED WITH A 2 WIRE DECODER.

2 . 2 WIRE DECODER S STEM WIRE TO BE PAIGE ELECTRIC CABLE P 0 2D 2 AWG 2 CONDUCTOR CABLE DIRECT BURIAL WIRE. FOLLOW MANUFACTURER S INSTRUCTIONS FOR CONNECTIONS, GROUNDING AND SURGE AND LIGHTNING CONTROL.

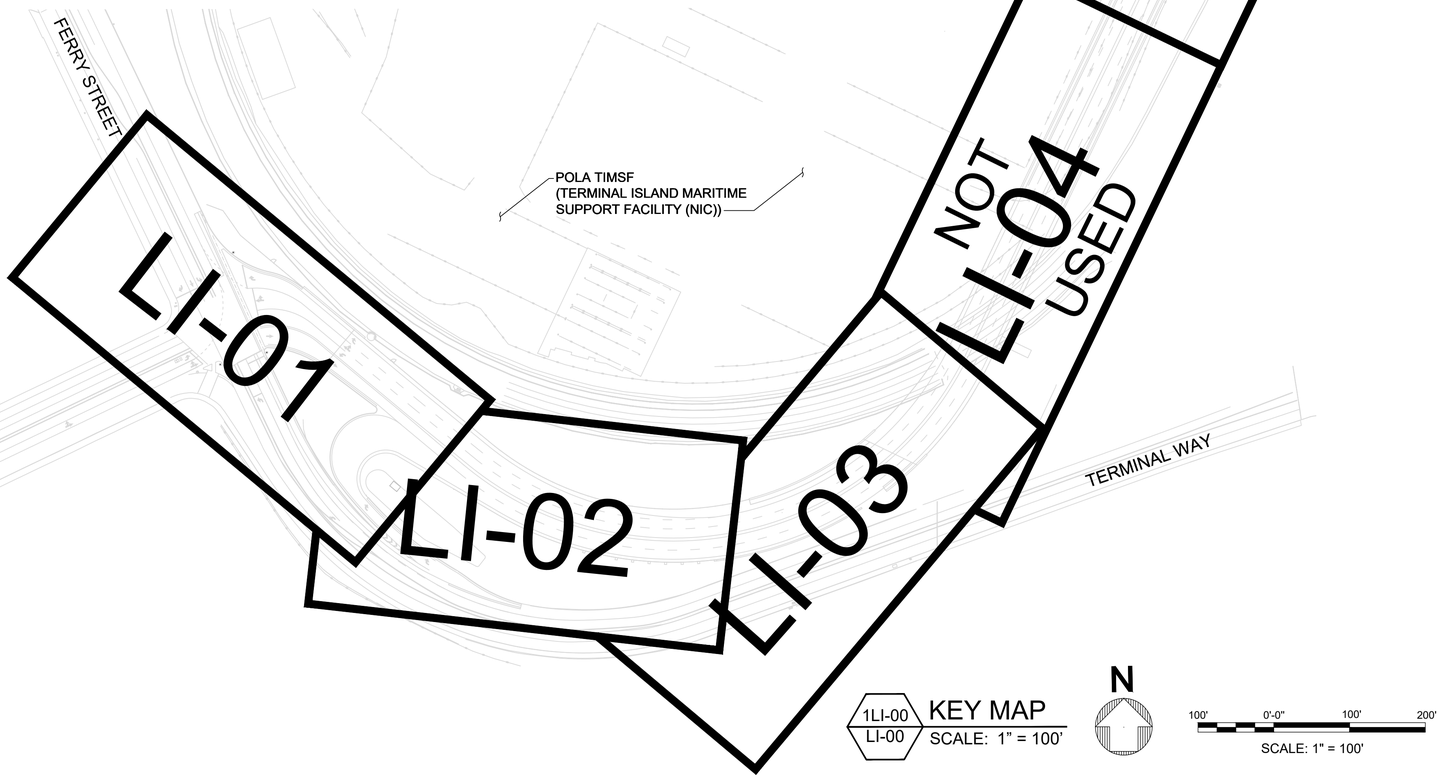

1LI-00 / LI-00 KEY MAP
SCALE: 1" = 100'

N

100' 0'-0" 100' 200'
SCALE: 1" = 100'

SHEET ____ OF 400

NO.	DATE	DRAWN	REVISIONS -	CHK'D	APP'D
			NOT FOR CONSTRUCTION		

NO.	DATE	DRAWN	REVISIONS -	CHK'D	APP'D
			80% DESIGN		

YKD Landscape Architecture Urban Design
2629 FOOTHILL BLVD., 204
LA CRESCENTA, CA 91214

SCALE: 1"=100'
DRAWN: Y. . KIM
CHECKED: Y. KIM
DESIGNED: Y. . KIM
ENGINEER / ARCHITECT

TERMINAL ISLAND GRADE SEPARATION

LANDSCAPE IRRIGATION - KEY MAP

THE PORT OF LOS ANGELES
ENGINEERING DIVISION
425 S. PALOS VERDES STREET SAN PEDRO CA 90731-3309

DRAWING NUMBER 1-3497
SHEET NUMBER LI-00

POLAPRO1_042023_BWD

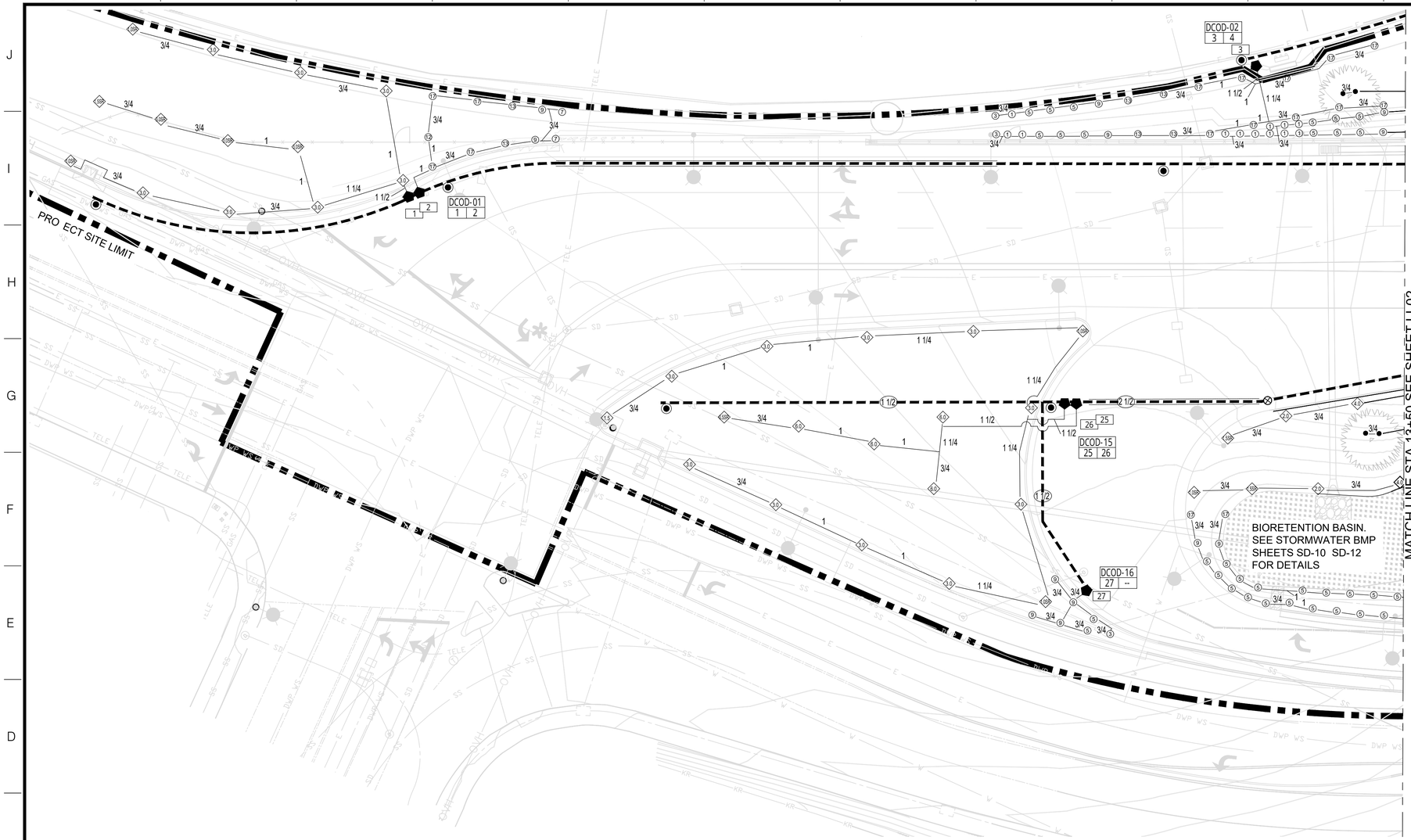

8.0 1.5SR ALL ROTOR HEADS: PROVIDE WITH NOZZLE INDICATED IN EACH SYMBOL

HUNTER I-20 HEADS 40 PSI	
NOZZLE	GPM
1.5	1.4
2.0	1.8
2.5	2.3
3.0	2.4
4.0	3.7
6.0	4.9
8.0	6.0
10.0	9.5
13.0	10.9

HUNTER I-20 HEADS 40 PSI	
NOZZLE	GPM
2.0LA	1.9
2.5LA	2.5
3.5LA	3.1
4.5LA	3.9
6.0LA	5.0
8.0LA	6.7
0.5SR	0.43
0.75SR	0.58
1.0SR	0.9
1.5SR	1.3
2.0SR	1.7
3.0SR	2.7

RAD	F	H	T	
5'		① 0.23	② 0.34	③ 0.12
8'	④ 0.97	⑤ 0.47	⑥ 0.32	⑦ 0.24
10'	⑧ 1.59	⑨ 0.88	⑩ 0.57	⑪ 0.42
12'	⑫ 2.70	⑬ 1.30	⑭ 0.89	⑮ 0.67
15'	⑯ 3.75	⑰ 1.86	⑱ 1.30	⑲ 0.97
17'	⑳ 4.60	㉑ 2.37	㉒ 1.53	㉓ 1.15

HUNTER PRO-SPRAY NOZZLES 30 PSI

HYDROZONE (HZ)	DESCRIPTION	AREA
1	POP-UP SPRAY	FLATS
2	ROTOR HEAD	FLATS
3	POP-UP SPRAY	SLOPES
4	ROTOR HEAD	SLOPES
5	BUBBLER HEAD	TREES
6	BUBBLER HEAD	PINE TREES

DECODER KEY

DECODER NUMBER

DCOD-01 1 2

VALVE NUMBERS CONNECTED

DECODER ASSIGNMENTS					
STATION	TYPE	HZ	GPM	SIZE	DECODER #
1	SHRUB	1	15.0	1 1/2	1
2	SHRUB	2	30.1	1 1/2	1
3	SHRUB	1	29.3	1 1/2	2
4	SHRUB	3	22.8	1 1/2	2
5	TREE	5	11.0	1	3
6	SHRUB	2	31.1	2	3
7	SHRUB	2	33.4	2	4
8	SHRUB	1	25.2	1 1/2	5
9	SHRUB	1	24.0	1 1/2	5
10	TREE	6	8.0	1	6
11	SHRUB	4	20.9	1 1/2	7
12	SHRUB	4	24.6	1 1/2	7
13	TREE	5	15.0	1 1/2	8
14	TREE	6	7.0	1	8
15	SHRUB	4	20.6	1 1/2	9
16	SHRUB	3	8.6	1	9
17	SHRUB	4	20.6	1 1/2	10
18	SHRUB	3	8.6	1	10
19	SHRUB	4	23.2	1 1/2	11
20	SHRUB	2	25.2	1 1/2	12
21	SHRUB	2	31.4	2	12
22	SHRUB	4	23.5	1 1/2	13
23	TREE	6	11.0	1	13
24	SHRUB	4	21.9	1 1/2	14
25	SHRUB	2	23.6	1 1/2	15
26	SHRUB	2	31.8	2	15
27	SHRUB	1	15.0	1	16
28	SHRUB	3	24.3	1 1/2	17
29	SHRUB	3	28.6	1 1/2	17
30	SHRUB	3	7.68	1	18
31	SHRUB	4	20.9	1 1/2	18
32	TREE	5	14.0	1	19
33	SHRUB	4	16.3	1 1/2	19
34	TREE	5	6.0	1	20
35	SHRUB	4	22.2	1 1/2	20
36	SHRUB	3	15.6	1 1/2	21
37	SHRUB	3	14.8	1 1/2	21
38	SHRUB	3	28.1	1 1/2	22
39	SHRUB	3	18.9	1 1/2	23
40	TREE	6	3.0	1	23
41	SHRUB	3	15.2	1 1/2	24
42	SHRUB	3	28.3	1 1/2	24

NOTES
1. SEE SHEETS LI-00 FOR IRRIGATION NOTES
2. SEE SHEET LI-06 FOR IRRIGATION LEGEND AND IRRIGATION PRESSURE CALCULATIONS
3. SEE UTILITY SHEETS U-00 U-06 FOR EXISTING UTILITY REMOVAL AND PROTECTION PLANS

LI 0 / LI 0 IRRIGATION PLAN
SCALE: 1"=20'

N

20' 0'-0" 20' 40'
SCALE: 1" = 20'

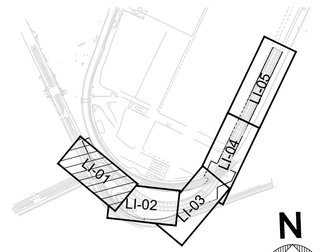

KEY MAP
NOT TO SCALE

SHEET ____ OF 400

NO.	DATE	DRAWN	REVISIONS -	CHK'D	APP'D
			NOT FOR CONSTRUCTION		

NO.	DATE	DRAWN	REVISIONS -	CHK'D	APP'D
			80% DESIGN		

YKD Landscape Architecture Urban Design
2629 FOOTHILL BLVD., 204
LA CRESCENTA, CA 91214

SCALE: 1"=20'
DRAWN: Y. . KIM
CHECKED: Y. KIM
DESIGNED: Y. . KIM
ENGINEER / ARCHITECT

TERMINAL ISLAND GRADE SEPARATION

IRRIGATION PLAN - 1

THE PORT OF LOS ANGELES
ENGINEERING DIVISION
425 S. PALOS VERDES STREET SAN PEDRO CA 90731-3309

DRAWING NUMBER 1-3497
SHEET NUMBER LI-01

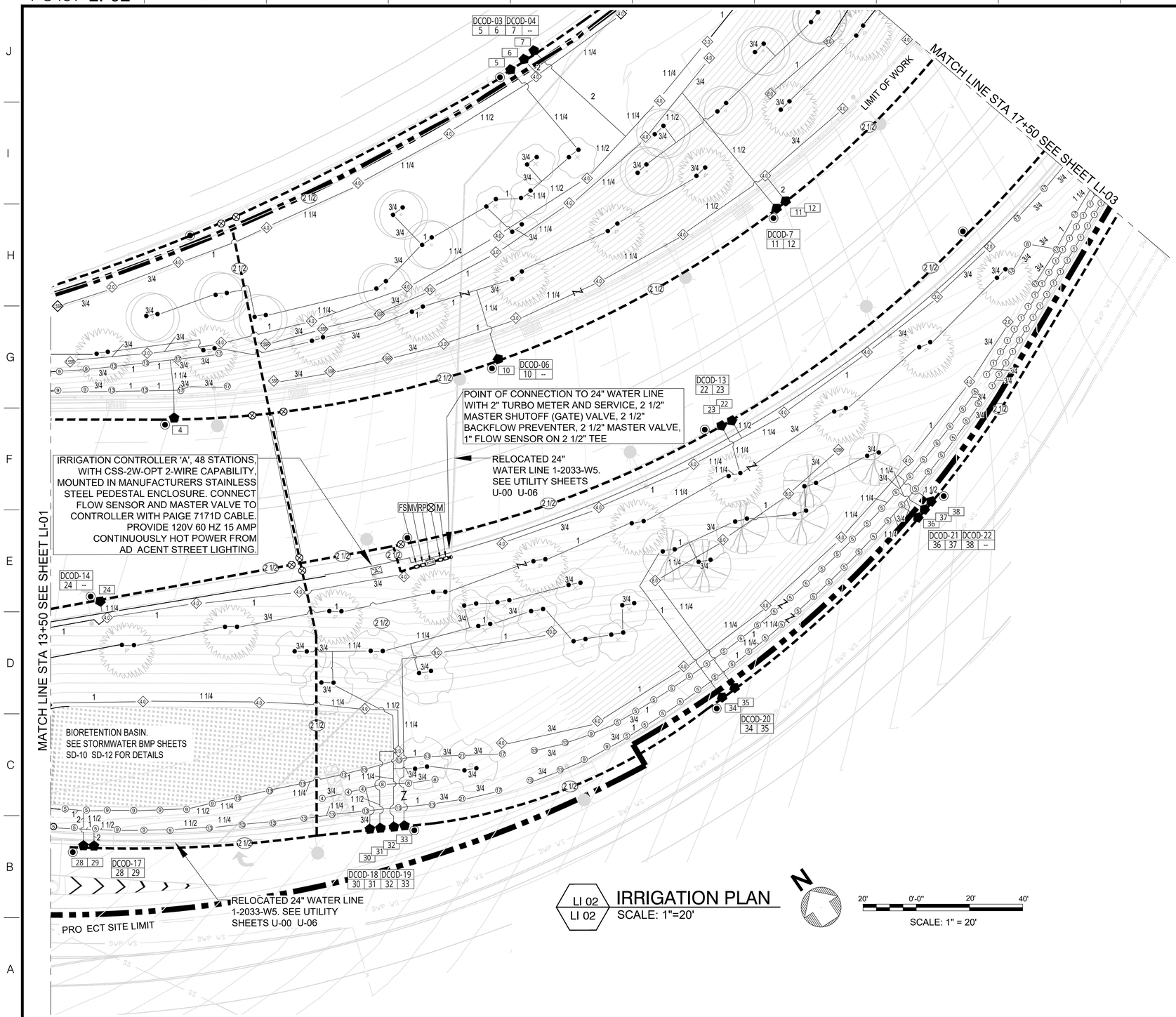

LI 02
LI 02 **IRRIGATION PLAN**
SCALE: 1"=20'

N

20' 0'-0" 20' 40'
SCALE: 1" = 20'

8.0 1.5SR ALL ROTOR HEADS: PROVIDE WITH NOZZLE INDICATED IN EACH SYMBOL

HUNTER I-20 HEADS 40 PSI	
NOZZLE	GPM
1.5	1.4
2.0	1.8
2.5	2.3
3.0	2.4
4.0	3.7
6.0	4.9
8.0	6.0
10.0	9.5
13.0	10.9

HUNTER I-20 HEADS 40 PSI	
NOZZLE	GPM
2.0LA	1.9
2.5LA	2.5
3.5LA	3.1
4.5LA	3.9
6.0LA	5.0
8.0LA	6.7
0.5SR	0.43
0.75SR	0.58
1.0SR	0.9
1.5SR	1.3
2.0SR	1.7
3.0SR	2.7

RAD	F	H	T	
5'		① 0.23	② 0.34	③ 0.12
8'	④ 0.97	⑤ 0.47	⑥ 0.32	⑦ 0.24
10'	⑧ 1.59	⑨ 0.88	⑩ 0.57	⑪ 0.42
12'	⑫ 2.70	⑬ 1.30	⑭ 0.89	⑮ 0.67
15'	⑯ 3.75	⑰ 1.86	⑱ 1.30	⑲ 0.97
17'	⑳ 4.60	㉑ 2.37	㉒ 1.53	㉓ 1.15

HUNTER PRO-SPRAY NOZZLES 30 PSI

HYDROZONE (HZ)	DESCRIPTION	AREA
1	POP-UP SPRAY	FLATS
2	ROTOR HEAD	FLATS
3	POP-UP SPRAY	SLOPES
4	ROTOR HEAD	SLOPES
5	BUBBLER HEAD	TREES
6	BUBBLER HEAD	PINE TREES

DECODER KEY
DECODER NUMBER
DCOD-01 1 2
VALVE NUMBERS CONNECTED

DECODER ASSIGNMENTS

STATION	TYPE	HZ	GPM	SIZE	DECODER #
1	SHRUB	1	15.0	1 1/2	1
2	SHRUB	2	30.1	1 1/2	1
3	SHRUB	1	29.3	1 1/2	2
4	SHRUB	3	22.8	1 1/2	2
5	TREE	5	11.0	1	3
6	SHRUB	2	31.1	2	3
7	SHRUB	2	33.4	2	4
8	SHRUB	1	25.2	1 1/2	5
9	SHRUB	1	24.0	1 1/2	5
10	TREE	6	8.0	1	6
11	SHRUB	4	20.9	1 1/2	7
12	SHRUB	4	24.6	1 1/2	7
13	TREE	5	15.0	1 1/2	8
14	TREE	6	7.0	1	8
15	SHRUB	4	20.6	1 1/2	9
16	SHRUB	3	8.6	1	9
17	SHRUB	4	20.6	1 1/2	10
18	SHRUB	3	8.6	1	10
19	SHRUB	4	23.2	1 1/2	11
20	SHRUB	2	25.2	1 1/2	12
21	SHRUB	2	31.4	2	12
22	SHRUB	4	23.5	1 1/2	13
23	TREE	6	11.0	1	13
24	SHRUB	4	21.9	1 1/2	14
25	SHRUB	2	23.6	1 1/2	15
26	SHRUB	2	31.8	2	15
27	SHRUB	1	15.0	1	16
28	SHRUB	3	24.3	1 1/2	17
29	SHRUB	3	28.6	1 1/2	17
30	SHRUB	3	7.68	1	18
31	SHRUB	4	20.9	1 1/2	18
32	TREE	5	14.0	1	19
33	SHRUB	4	16.3	1 1/2	19
34	TREE	5	6.0	1	20
35	SHRUB	4	22.2	1 1/2	20
36	SHRUB	3	15.6	1 1/2	21
37	SHRUB	3	14.8	1 1/2	21
38	SHRUB	3	28.1	1 1/2	22
39	SHRUB	3	18.9	1 1/2	23
40	TREE	6	3.0	1	23
41	SHRUB	3	15.2	1 1/2	24
42	SHRUB	3	28.3	1 1/2	24

NOTES
1. SEE SHEETS LI-00 FOR IRRIGATION NOTES
2. SEE SHEET LI-06 FOR IRRIGATION LEGEND AND IRRIGATION PRESSURE CALCULATIONS
3. SEE UTILITY SHEETS U-00 U-06 FOR EXISTING UTILITY REMOVAL AND PROTECTION PLANS

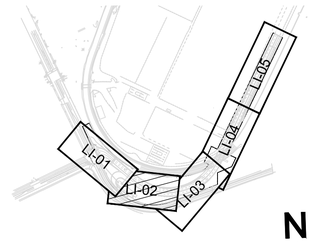

KEY MAP
NOT TO SCALE

SHEET ____ OF 400

NO.	DATE	DRAWN	REVISIONS -	CHK'D	APP'D
			NOT FOR CONSTRUCTION		

NO.	DATE	DRAWN	REVISIONS -	CHK'D	APP'D
			80% DESIGN		

YKD Landscape Architecture Urban Design
2629 FOOTHILL BLVD., 204
LA CRESCENTA, CA 91214

SCALE: 1"=20'
DRAWN: Y. . KIM
CHECKED: Y. KIM
DESIGNED: Y. . KIM
ENGINEER / ARCHITECT

TERMINAL ISLAND GRADE SEPARATION

IRRIGATION PLAN - 2

THE PORT OF LOS ANGELES
ENGINEERING DIVISION
425 S. PALOS VERDES STREET SAN PEDRO CA 90731-3309

DRAWING NUMBER 1-3497
SHEET NUMBER LI-02

POLAPRO1_042023_BWD

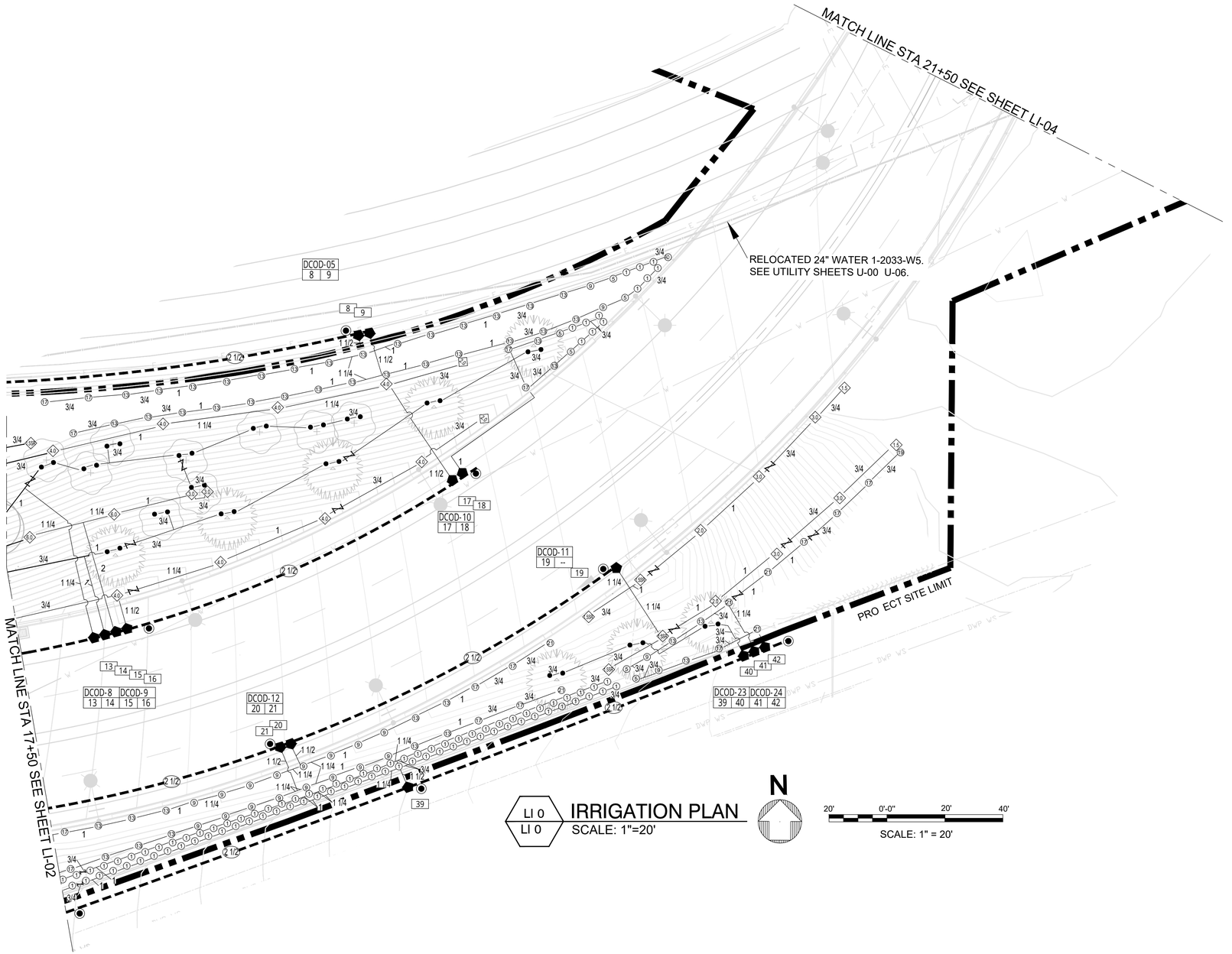

LI 0 / LI 0 IRRIGATION PLAN
SCALE: 1"=20'

N

20' 0'-0" 20' 40'
SCALE: 1" = 20'

8.0 1.5SR ALL ROTOR HEADS: PROVIDE WITH NOZZLE INDICATED IN EACH SYMBOL

HUNTER I-20 HEADS 40 PSI	
NOZZLE	GPM
1.5	1.4
2.0	1.8
2.5	2.3
3.0	2.4
4.0	3.7
6.0	4.9
8.0	6.0
10.0	9.5
13.0	10.9

HUNTER I-20 HEADS 40 PSI	
NOZZLE	GPM
2.0LA	1.9
2.5LA	2.5
3.5LA	3.1
4.5LA	3.9
6.0LA	5.0
8.0LA	6.7
0.5SR	0.43
0.75SR	0.58
1.0SR	0.9
1.5SR	1.3
2.0SR	1.7
3.0SR	2.7

RAD	F	H	T	
5'		① 0.23	② 0.34	③ 0.12
8'	④ 0.97	⑤ 0.47	⑥ 0.32	⑦ 0.24
10'	⑧ 1.59	⑨ 0.88	⑩ 0.57	⑪ 0.42
12'	⑫ 2.70	⑬ 1.30	⑭ 0.89	⑮ 0.67
15'	⑯ 3.75	⑰ 1.86	⑱ 1.30	⑲ 0.97
17'	⑳ 4.60	㉑ 2.37	㉒ 1.53	㉓ 1.15

HUNTER PRO-SPRAY NOZZLES
30 PSI

HYDROZONE (HZ)	DESCRIPTION	AREA
1	POP-UP SPRAY	FLATS
2	ROTOR HEAD	FLATS
3	POP-UP SPRAY	SLOPES
4	ROTOR HEAD	SLOPES
5	BUBBLER HEAD	TREES
6	BUBBLER HEAD	PINE TREES

DECODER KEY
DECODER NUMBER
DCOD-01
1 2
VALVE NUMBERS CONNECTED

DECODER ASSIGNMENTS

STATION	TYPE	HZ	GPM	SIZE	DECODER #
1	SHRUB	1	15.0	1 1/2	1
2	SHRUB	2	30.1	1 1/2	1
3	SHRUB	1	29.3	1 1/2	2
4	SHRUB	3	22.8	1 1/2	2
5	TREE	5	11.0	1	3
6	SHRUB	2	31.1	2	3
7	SHRUB	2	33.4	2	4
8	SHRUB	1	25.2	1 1/2	5
9	SHRUB	1	24.0	1 1/2	5
10	TREE	6	8.0	1	6
11	SHRUB	4	20.9	1 1/2	7
12	SHRUB	4	24.6	1 1/2	7
13	TREE	5	15.0	1 1/2	8
14	TREE	6	7.0	1	8
15	SHRUB	4	20.6	1 1/2	9
16	SHRUB	3	8.6	1	9
17	SHRUB	4	20.6	1 1/2	10
18	SHRUB	3	8.6	1	10
19	SHRUB	4	23.2	1 1/2	11
20	SHRUB	2	25.2	1 1/2	12
21	SHRUB	2	31.4	2	12
22	SHRUB	4	23.5	1 1/2	13
23	TREE	6	11.0	1	13
24	SHRUB	4	21.9	1 1/2	14
25	SHRUB	2	23.6	1 1/2	15
26	SHRUB	2	31.8	2	15
27	SHRUB	1	15.0	1	16
28	SHRUB	3	24.3	1 1/2	17
29	SHRUB	3	28.6	1 1/2	17
30	SHRUB	3	7.68	1	18
31	SHRUB	4	20.9	1 1/2	18
32	TREE	5	14.0	1	19
33	SHRUB	4	16.3	1 1/2	19
34	TREE	5	6.0	1	20
35	SHRUB	4	22.2	1 1/2	20
36	SHRUB	3	15.6	1 1/2	21
37	SHRUB	3	14.8	1 1/2	21
38	SHRUB	3	28.1	1 1/2	22
39	SHRUB	3	18.9	1 1/2	23
40	TREE	6	3.0	1	23
41	SHRUB	3	15.2	1 1/2	24
42	SHRUB	3	28.3	1 1/2	24

NOTES

1. SEE SHEETS LI-00 FOR IRRIGATION NOTES
2. SEE SHEET LI-06 FOR IRRIGATION LEGEND AND IRRIGATION PRESSURE CALCULATIONS
3. SEE UTILITY SHEETS U-00 U-06 FOR EXISTING UTILITY REMOVAL AND PROTECTION PLANS

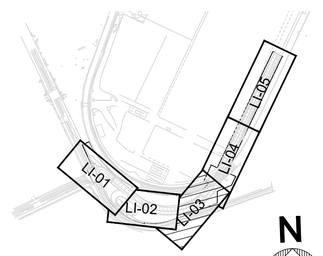

KEY MAP
NOT TO SCALE

SHEET ____ OF 400

NO.	DATE	DRAWN	REVISIONS -	CHK'D	APP'D
			NOT FOR CONSTRUCTION		

NO.	DATE	DRAWN	REVISIONS -	CHK'D	APP'D
			80% DESIGN		

YKD Landscape Architecture Urban Design
2629 FOOTHILL BLVD., 204
LA CRESCENTA, CA 91214

SCALE: 1"=20'
DRAWN: Y. . KIM
CHECKED: Y. KIM
DESIGNED: Y. . KIM
ENGINEER / ARCHITECT

TERMINAL ISLAND GRADE SEPARATION

IRRIGATION PLAN - 3

THE PORT OF LOS ANGELES
ENGINEERING DIVISION
425 S. PALOS VERDES STREET SAN PEDRO CA 90731-3309

DRAWING NUMBER 1-3497
SHEET NUMBER LI-03

PRO ECT SITE LIMIT

MATCH LINE STA 21+50 SEE SHEET LI-03

MATCH LINE STA 26+00 SEE SHEET LI-05

NOT USED

LI 0
LI 0

IRRIGATION PLAN
SCALE: 1"=20'

20' 0'-0" 20' 40'
SCALE: 1" = 20'

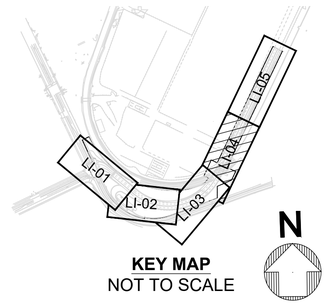

KEY MAP
NOT TO SCALE

SHEET ____ OF 400

NO.	DATE	DRAWN	REVISIONS -	CHK'D	APP'D
			NOT FOR CONSTRUCTION		

NO.	DATE	DRAWN	REVISIONS -	CHK'D	APP'D
			80% DESIGN		

YKD
Landscape Architecture
Urban Design
2629 FOOTHILL BLVD., 204
LA CRESCENTA, CA 91214

SCALE: 1"=20'
DRAWN: Y. . KIM
CHECKED: Y. KIM
DESIGNED: Y. . KIM
ENGINEER / ARCHITECT

TERMINAL ISLAND GRADE SEPARATION

IRRIGATION PLAN - 4

THE PORT OF LOS ANGELES
ENGINEERING DIVISION
425 S. PALOS VERDES STREET SAN PEDRO CA 90731-3309

DRAWING NUMBER 1-3497
SHEET NUMBER LI-04

POLAPRO1_04/2023_BWD

PRO ECT SITE LIMIT

MATCH LINE STA 26+00 SEE SHEET LI-04

NOT USED

MATCH LINE STA 30+50 SEE "2LI-05" DETAIL

LI 0
LI 0
IRRIGATION PLAN
SCALE: 1"=20'

20' 0'-0" 20' 40'
SCALE: 1" = 20'

PRO ECT SITE LIMIT

MATCH LINE STA 30+50 SEE "1LI-05" DETAIL

NOT USED

STATION: 32+70 (1-3515)
SEE TIMS CONSTRUCTION BY OTHERS

2LI 0
LI 0
IRRIGATION PLAN
SCALE: 1"=20'

20' 0'-0" 20' 40'
SCALE: 1" = 20'

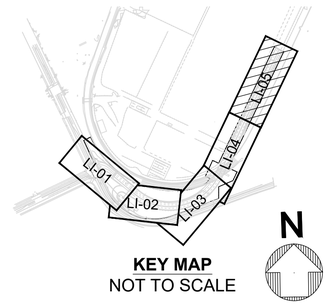

KEY MAP
NOT TO SCALE

SHEET ____ OF 400

NO.	DATE	DRAWN	REVISIONS -	CHK'D	APP'D
			NOT FOR CONSTRUCTION		

NO.	DATE	DRAWN	REVISIONS -	CHK'D	APP'D
			80% DESIGN		

YKD
Landscape Architecture
Urban Design
2629 FOOTHILL BLVD., 204
LA CRESCENTA, CA 91214

SCALE: 1"=20'
DRAWN: Y. . KIM
CHECKED: Y. KIM
DESIGNED: Y. . KIM
ENGINEER / ARCHITECT

TERMINAL ISLAND GRADE SEPARATION

IRRIGATION PLAN - 5

THE PORT OF LOS ANGELES
ENGINEERING DIVISION
425 S. PALOS VERDES STREET SAN PEDRO CA 90731-3309

DRAWING NUMBER 1-3497
SHEET NUMBER LI-05

POLAPROT_04/2023_BWD

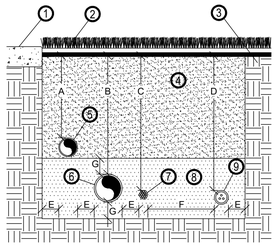

1. PAVING OR CURB EDGE
2. FINISH GRADE
3. UNDISTURBED SOIL
4. CLEAN COMPACTED BACKFILL
5. LATERAL PIPE
6. PRESSURE MAIN LINE PIPE
7. CONTROL WIRES. LAY NEXT TO MAINLINE. BUNDLE AND TAPE AT TEN FOOT INTERVALS
8. CLEAN SAND BACKFILL
9. 120V POWER WIRES IN SCH 40 CONDUIT

TIE A 36" LOOP IN ALL WIRING AT ALL CHANGES OF DIRECTION GREATER THAN 30 DEGREES, UNTIE AFTER ALL CONECTIONS HAVE BEEN MADE

DIMENSION	A	B	C	D	E	F	G
1/2" TO 1 1/2" SIZE	12	18"	20"	18"	6"	24"	6"
2" TO 2 1/2" IN SIZE	12"	18"	20"	18"	6"	24"	6"
3" AND LARGER	18"	24"	26"		6"	24"	6"

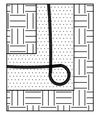

PLAN VIEW - NTS

SNAKE ALL PLASTIC PIPING WITHIN TRENCHES
INSTALL ALL PIPE IN ACCORD WITH MANUFACTURERS SPECIFICATIONS

LI 0 / LI 0 0 — PIPE WIRE TRENCHING
SCALE: NTS

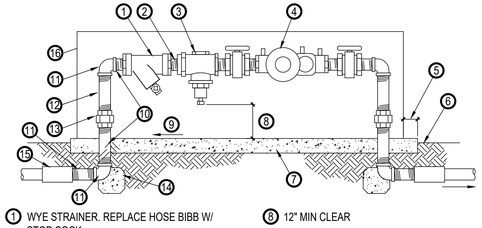

1. WYE STRAINER. REPLACE HOSE BIBB W/ STOP COCK
2. SHORT BRASS NIPPLES, TYP.
3. PRESSURE REDUCING VALVE
4. REDUCED PRESSURE TYPE BACKFLOW PREVENTER W/ GATE VALVES & TEST COCKS
5. 6" MIN ALL AROUND
6. FINISH GRADE
7. CONCRETE BASE 6" MIN THICK
8. 12" MIN CLEAR
9. SLOPE TO EDGES
10. SHORT BRASS NIPPLE
11. BRASS ELL
12. THREADED BRASS RISER
13. BRASS UNION
14. THRUST BLOCKS - SIZE AS RE UIRED FOR SOIL TYPE
15. PIPE ADAPTER AS RE UIRED
16. STEEL ENCLOSURE

OUTLET FITTINGS TYPICAL TO INLET FITTINGS

SEE SPECIFICATIONS FOR TRENCH DEPTHS

2LI 0 / LI 02 — REDUCED PRESSURE BACKFLOW PRE ENTER
SCALE: NTS

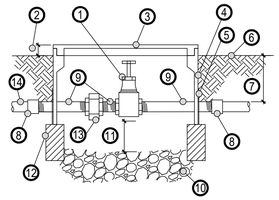

1. GATE VALVE W/ CROSS HANDLE, LINE SIZE
2. 2" CLEAR ABOVE FINISHED GRADE
3. PLASTIC VALVE BOX W/ LOCKING COVER MARKED "GV"
4. EXTENSIONS AS RE UIRED
5. COVER OPENINGS WITH 15 FELT OR FIBERGLASS MATTING
6. FINISHED GRADE
7. SEE SPECS
8. SCH 80 PVC ADAPTER (F F)
9. SCH 80 PVC NIPPLE (T T, NO CLOSE NIPPLES, LENGTH AS RE UIRED)
10. 2 CU FT PEA GRAVEL MIN.
11. 2" MIN 6" MAX CLEAR
12. SET BOX ON FOUR BRICKS
13. BRASS UNION
14. PVC MAIN

LI 0 / LI 02 — GATE AL E
SCALE: NTS

DECODER KEY

DCOD-01 (1 = DECODER NUMBER; 2 = VALVE NUMBERS CONNECTED)

DECODER ASSIGNMENTS

STATION	TYPE	HZ	GPM	SIZE	DECODER #
1	SHRUB	1	15.0	1 1/2	1
2	SHRUB	2	30.1	1 1/2	1
3	SHRUB	1	29.3	1 1/2	2
4	SHRUB	3	22.8	1 1/2	2
5	TREE	5	11.0	1	3
6	SHRUB	2	31.1	2	3
7	SHRUB	2	33.4	2	4
8	SHRUB	1	25.2	1 1/2	5
9	SHRUB	1	24.0	1 1/2	5
10	TREE	6	8.0	1	6
11	SHRUB	4	20.9	1 1/2	7
12	SHRUB	4	24.6	1 1/2	7
13	TREE	5	15.0	1 1/2	8
14	TREE	6	7.0	1	8
15	SHRUB	4	20.6	1 1/2	9
16	SHRUB	3	8.6	1	9
17	SHRUB	4	20.6	1 1/2	10
18	SHRUB	3	8.6	1	10
19	SHRUB	4	23.2	1 1/2	11
20	SHRUB	2	25.2	1 1/2	12
21	SHRUB	2	31.4	2	12
22	SHRUB	4	23.5	1 1/2	13
23	TREE	6	11.0	1	13
24	SHRUB	4	21.9	1 1/2	14
25	SHRUB	2	23.6	1 1/2	15
26	SHRUB	2	31.8	2	15
27	SHRUB	1	15.0	1	16
28	SHRUB	3	24.3	1 1/2	17
29	SHRUB	3	28.6	1 1/2	17
30	SHRUB	3	7.68	1	18
31	SHRUB	4	20.9	1 1/2	18
32	TREE	5	14.0	1	19
33	SHRUB	4	16.3	1 1/2	19
34	TREE	5	6.0	1	20
35	SHRUB	4	22.2	1 1/2	20
36	SHRUB	3	15.6	1 1/2	21
37	SHRUB	3	14.8	1 1/2	21
38	SHRUB	3	28.1	1 1/2	22
39	SHRUB	3	18.9	1 1/2	23
40	TREE	6	3.0	1	23
41	SHRUB	3	15.2	1 1/2	24
42	SHRUB	3	28.3	1 1/2	24

HYDROZONE (HZ)	DESCRIPTION	AREA
1	POP-UP SPRAY	FLATS
2	ROTOR HEAD	FLATS
3	POP-UP SPRAY	SLOPES
4	ROTOR HEAD	SLOPES
5	BUBBLER HEAD	TREES
6	BUBBLER HEAD	PINE TREES

8.0 / 5SR — ALL ROTOR HEADS: PROVIDE WITH NOZZLE INDICATED IN EACH SYMBOL

HUNTER I-20 HEADS	
40 PSI	
NOZZLE	GPM
1.5	1.4
2.0	1.8
2.5	2.3
3.0	2.4
4.0	3.7
6.0	4.9
8.0	6.0
10.0	9.5
13.0	10.9

HUNTER I-20 HEADS	
40 PSI	
NOZZLE	GPM
2.0LA	1.9
2.5LA	2.5
3.5LA	3.1
4.5LA	3.9
6.0LA	5.0
8.0LA	6.7
0.5SR	0.43
0.75SR	0.58
1.0SR	0.9
1.5SR	1.3
2.0SR	1.7
3.0SR	2.7

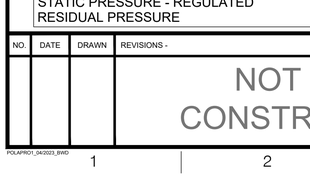

1. UICK COUPLER VALVE
2. 2" CLEAR ABOVE FINISHED GRADE
3. VALVE BOX W/ LOCKING COVER MARKED " CV"
4. FINISHED GRADE
5. COVER OPENINGS W/ 15 FELT OR FIBERGLASS MATTING
6. 1 CU. FT CONCRETE BASE
7. THREADED BRASS RISER (LENGTH AS RE 'D)
8. SET BOX ON 4 BRICKS
9. 2 CU.FT. PEA GRAVEL
10. UNDISTURBED OR 90% COMPACTED FILL
11. BRASS ELL
12. 3" LONG BRASS NIPPLE (T T)
13. SCH 80 FEMALE ADAPTER (S T)
14. 4" MIN LONG SCH 80 PVC PIPE
15. SCH 80 PVC TEE OR ELL AT MAIN
16. SEE SPECIFICATIONS

ALL BRASS FITTINGS TO BE IPS RED BRASS

LI 0 / LI 0 0 — UICK COUPLER AL E
SCALE: NTS

1. 6" MIN, 12" MAX FROM FIXED IMPROVEMENTS
2. SCH 80 PVC NIPPLE (T T)
3. TRUE UNION VALL VALVE (PER PLAN)
4. 18" MIN EXPANSION LOOPS
5. SOLENOID
6. EPOXY CONNECTORS
7. VALVE BOX W/ LOCKING COVER MARKED "MCV"
8. MASTER CONTROL VALVE
9. COVER OPENINGS W/ 15 FELT OR FIBERGLASS MATTING
10. FINISHED GRADE
11. SCH 80 ADAPTER (F F)
12. LATERAL PIPING
13. 2 - 3" SCH 80 NIPPLES (T T)
14. UNION
15. 3" SCH 80 PVC NIPPLE (T T)
16. SET VALVE BOX ON FOUR (4) BRICKS
17. 2 CU. FT. PEA GRAVEL
18. 2" MIN. 6" MAX CLEAR
19. PVC SCH 80 TEE OR ELL AT MAIN
20. SCH 80 PVC PIPE. LENGTH AS RE 'D
21. SCH 80 PVC ELL (S T)
22. BUNDLE & TAPE CONTROL WIRES
23. 2" CLEAR ABOVE FINISHED GRADE

LI 0 / LI 02 — MASTER CONTROL AL E
SCALE: NTS

1. PIPE SADDLE OR WELDED ON FITTING
2. FLOW SENSOR
3. WIRES TO CONTROLLER
4. 1 1/2" THREADED HEX ADAPTER (INCLUDED W/ FLOW METER)
5. MAIN LINE (3 FT CLEAR OF OTHER E UIPMENT ON EITHER SIDE OF FLOW METER)
6. VALVE BOX W/ LOCKING COVER MARKED "FV"
7. FINISHED GRADE
8. 2" MIN, 6" MAX CLEAR
9. UNDISTURBED OR 95% COMPACTED SOIL
10. 2 CU FT MIN PEA GRAVEL
11. SET BOX ON 4 BRICKS
12. 2" CLEAR ABOVE FINISHED GRADE

LI 0 / LI 02 — FLOW SENSOR
SCALE: NTS

RAD	F	H	T	
5'		① 0.23	② 0.34	③ 0.12
8'	④ 0.97	⑤ 0.47	⑥ 0.32	⑦ 0.24
10'	⑧ 1.59	⑨ 0.88	⑩ 0.57	⑪ 0.42
12'	⑫ 2.70	⑬ 1.30	⑭ 0.89	⑮ 0.67
15'	⑯ 3.75	⑰ 1.86	⑱ 1.30	⑲ 0.97
17'	⑳ 4.60	㉑ 2.37	㉒ 1.53	㉓ 1.15

HUNTER PRO-SPRAY NOZZLES
30 PSI

IRRIGATION PRESSURE CALCULATIONS

VALVE NO. 7	1 1/2" SIZE	33.4 GPM
LARGEST		
	SIZE	LOSS
METER	2	0.90 PSI
SERVICE LINE	2	0.27 PSI
RP BACKFLOW PREVENTER	2 1/2	11.00 PSI
FLOW SENSOR	1	0.50 PSI
MASTER VALVE	2 1/2	0.50 PSI
MAINLINE 310 FT CL315	2 1/2	1.12 PSI
MAINLINE FITTINGS	10%	0.11 PSI
GATE VALVES	2 1/2	1.00 PSI
REMOTE CONTROL VALVE	1 1/2	0.70 PSI
LATERALS		1.75 PSI
LATERAL FITTINGS	5%	0.10 PSI
TOTAL LOSSES		17.95 PSI
OPERATING PRESSURE		40.00 PSI
ELEVATION		12.79 PSI
PRESSURE RE UIRED		70.74 PSI
STATIC PRESSURE - REGULATED		75.00 PSI
RESIDUAL PRESSURE		4.26 PSI

IRRIGATION PRESSURE CALCULATIONS

VALVE NO. 8	1 1/2" SIZE	25.2 GPM
HIGHEST - FARTHEST AWAY		
	SIZE	LOSS
METER	2	0.50 PSI
SERVICE LINE	2	0.05 PSI
RP BACKFLOW PREVENTER	2 1/2	11.00 PSI
FLOW SENSOR	1	0.50 PSI
MASTER VALVE	2 1/2	0.50 PSI
MAINLINE 550 FT CL315	2 1/2	2.00 PSI
MAINLINE FITTINGS	10%	0.20 PSI
GATE VALVES	2 1/2	1.00 PSI
REMOTE CONTROL VALVE	1 1/2	0.55 PSI
LATERALS		1.75 PSI
LATERAL FITTINGS	5%	0.10 PSI
TOTAL LOSSES		19.15 PSI
OPERATING PRESSURE		30.00 PSI
ELEVATION		12.79 PSI
PRESSURE RE UIRED		61.94 PSI
STATIC PRESSURE - REGULATED		75.00 PSI
RESIDUAL PRESSURE		13.06 PSI

IRRIGATION LEGEND

SYMBOL	DESCRIPTION	PSI	GPM	RAD	MFGR/MODEL
①	POP-UP ROTOR HEAD. SEE CHARTS & PLANS FOR NOZZLES	40	0.43-8.4	18'-43'	HUNTER I-20-12-SS
②	POP-UP SPRAY HEAD. SEE CHART FOR NOZZLES	30	0.12-3.75	5'-15'	HUNTER PRO-SPRAY IN PROS-12-PRS30-CV BODY
B	POP-UP BUBBLER HEAD	30	0.50	--	HUNTER PCB-50 BUBBLER IN PROS-6-PRS30-CV BODY
M	METER FOR IRRIGATION				PER WATER PURVEYOR STANDARDS
MV	MASTER CONTROL VALVE				BUCKNER-SUPERIOR 3000
RP	REDUCED PRESSURE BACKFLOW PREVENTER				FEBCO 825 YD W/ WILKINS 500 YSBR REGULATOR
FS	FLOW SENSOR				CALSENSE FM 2
	REMOTE CONTROL VALVE (1 = VALVE NUMBER)				RAIN BIRD EFB-CP-PRS
	UICK COUPLER VALVE				RAIN BIRD 44 LRC
	SHUTOFF VALVE, LINE SIZE				LASCO TUBV-SC
	PVC CHECK VALVE, LINE SIZE				KING BROS OR E UAL
A	AUTOMATIC IRRIGATION CONTROLLER				CALSENSE CS3000-2W
	PVC MAIN LINE (PRESSURE) PIPING, SIZE AS SHOWN				LESS THAN OR E UAL TO 1 1/2" SCH 80, 2" & GREATER CL 315
	SCH 40 PVC LATERAL, (NON-PRESSURE) PIPING, SIZE AS SHOWN				SCH 40
	SCH 40 PVC SLEEVE, 2 DIAM OF CARRYING PIPE, MIN.				SCH 40

SHEET ____ OF 400

NO.	DATE	DRAWN	REVISIONS -	CHK'D	APP'D
			NOT FOR CONSTRUCTION		

NO.	DATE	DRAWN	REVISIONS -	CHK'D	APP'D
			80% DESIGN		

YKD Landscape Architecture Urban Design
2629 FOOTHILL BLVD., 204
LA CRESCENTA, CA 91214

SCALE: AS NOTED
DRAWN: Y. . KIM
CHECKED: Y. KIM
DESIGNED: Y. . KIM
ENGINEER / ARCHITECT

TERMINAL ISLAND GRADE SEPARATION

LANDSCAPE IRRIGATION TABLES & DETAILS

THE PORT OF LOS ANGELES
ENGINEERING DIVISION
425 S. PALOS VERDES STREET SAN PEDRO CA 90731-3309

DRAWING NUMBER 1-3497
SHEET NUMBER LI-06

POLAPRO1_04/2023_BWD

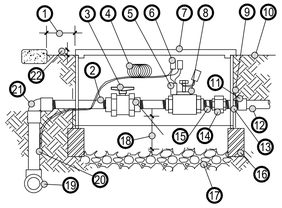

NOTE: ONE BALL VALVE MAY PRECEED A GROUP OF VALVES IN A MANIFOLD.

SEE SPECIFICATIONS FOR PIPE DEPTHS

1. 6" MIN, 12" MAX FROM FIXED IMPROVEMENTS
2. SCH 80 PVC NIPPLE (T T)
3. TRUE UNION VALL VALVE (PER PLAN)
4. 18" MIN EXPANSION LOOPS
5. SOLENOID
6. EPOXY CONNECTORS
7. VALVE BOX W/ LOCKING COVER MARKED "RCV" & VALVE NUMBER
8. REMOTE CONTROL VALVE W/ WATERPROOF ID TAG
9. COVER OPENINGS W/ 15 FELT OR FIBERGLASS MATTING
10. FINISHED GRADE
11. SCH 80 ADAPTER (F F)
12. LATERAL PIPING
13. 2 - 3" SCH 80 NIPPLES (T T)
14. UNION
15. 3" SCH 80 PVC NIPPLE (T T)
16. SET VALVE BOX ON FOUR (4) BRICKS
17. 2 CU. FT. PEA GRAVEL
18. 2" MIN. 6" MAX CLEAR
19. PVC SCH 80 TEE OR ELL AT MAIN
20. SCH 80 PVC PIPE. LENGTH AS RE 'D
21. SCH 80 PVC ELL (S T)
22. 2" CLEAR ABOVE FINISHED GRADE

LI 0 / LI 0 0 — REMOTE CONTROL AL E
SCALE: NTS

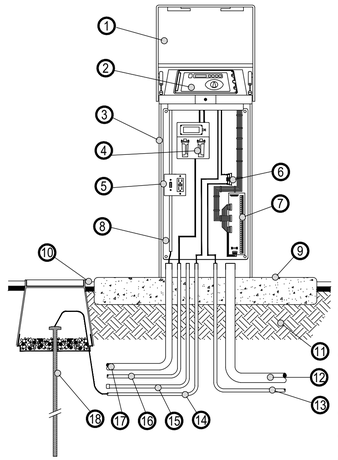

1. STAINLESS STEEL LID (SHOWN OPEN)
2. CONTROLLER
3. STAINLESS STEEL ENCLOSURE
4. FLOW SENSOR OUTPUT TRANSMITTER W/ PULSE DECODER & SENSOR DECODERS AS RE UIRED
5. GFCI TYPE POWER SWITCH & RECEPTACLE
6. COMM CABLE TERMINAL BLOCK
7. CONTROL VALVE TERMINAL STRIP
8. STAINLESS STEEL BACKBOARD
9. CONCRETE PAD, MIN 4" THICK. 12" CLEAR ALL AROUND, 24" CLEAR IN FRONT
10. FINISHED GRADE
11. 90% COMPACTED SOIL
12. 4" PVC SWEEP ELL FOR CONTROL WIRES
13. 1 1/4" PVC CONDUIT FOR COMM WIRES
14. 1" PVC CONDUIT FOR GROUND ROD CABLE
15. 2" PVC CONDUIT SPARE. CAP END
16. 1 1/4" PVC CONDUIT FOR SENSOR WIRES
17. 1 1/4" PVC CONDUIT FOR 120V SERVICE
18. 5/8" DIA. 9' COPPER GROUND ROD W/ 10 GROUND WIRE & CLAMP

2LI 0 / LI 02 — IRRIGATION CONTROLLER
SCALE: NTS

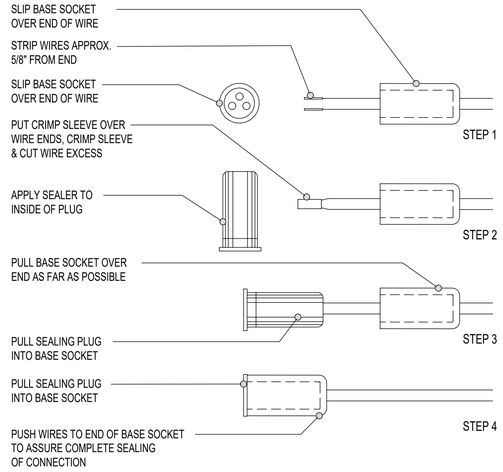

LI 0 / LI 0 0 — WIRE CONNECTORS
SCALE: NTS

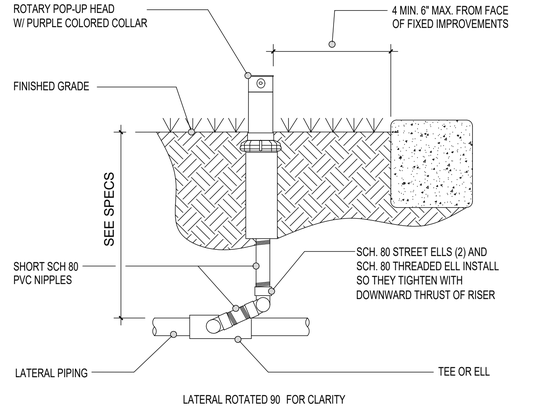

LATERAL ROTATED 90 FOR CLARITY

LI 0 / LI 0 0 — ROTAR POP UP HEAD
SCALE: NTS

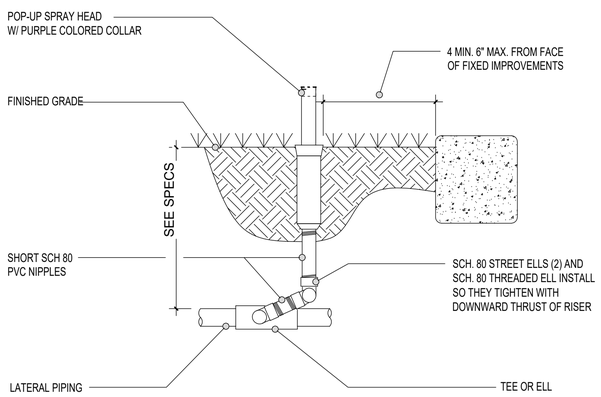

LI 0 / LI 0 0 — POP UP HEAD " (BUBBLERS)
SCALE: NTS

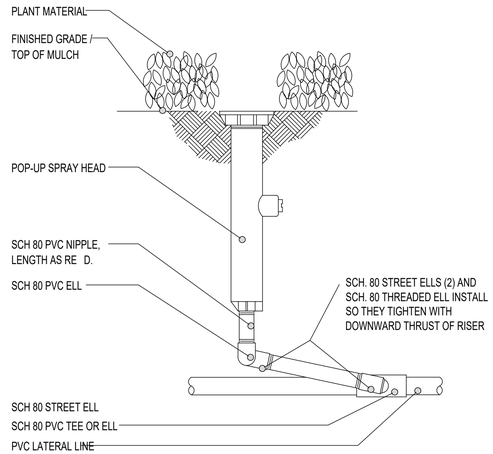

LI 0 / LI 0 0 — POP UP SPRA HEAD 2"
SCALE: NTS

Calsense POC model CS-2W-POC)
Decoder Installation

Use 3M Scotchcast #3570G-N epoxy packs for ALL wire splices.

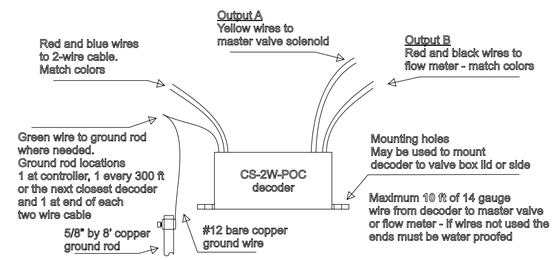

LI 0 / LI 02 — DECODER AT POINT OF CONNECTION
SCALE: NTS

Calsense 2-station model CS-2W-2ST)
Decoder Installation

Use 3M Scotchcast #3570G-N epoxy packs for ALL wire splices.

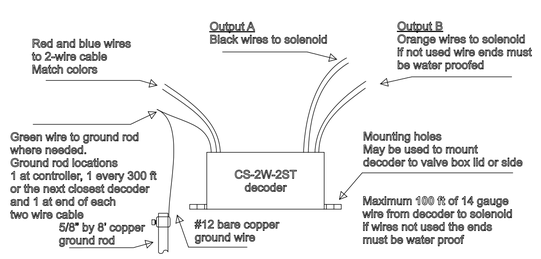

LI 0 / LI 0 0 — DECODER AT CONTROL AL E
SCALE: NTS

SHEET ____ OF 400

NO.	DATE	DRAWN	REVISIONS -	CHK'D	APP'D
			NOT FOR CONSTRUCTION		

NO.	DATE	DRAWN	REVISIONS -	CHK'D	APP'D
			80% DESIGN		

YKD
Landscape Architecture
Urban Design
2629 FOOTHILL BLVD., 204
LA CRESCENTA, CA 91214

SCALE:	AS NOTED
DRAWN:	Y. . KIM
CHECKED:	Y. KIM
DESIGNED:	Y. . KIM
	ENGINEER / ARCHITECT

TERMINAL ISLAND GRADE SEPARATION

LANDSCAPE IRRIGATION DETAILS

THE PORT OF LOS ANGELES
ENGINEERING DIVISION
425 S. PALOS VERDES STREET SAN PEDRO CA 90731-3309

DRAWING NUMBER	SHEET NUMBER
1-3497	LI-07

POLAPROJ_04/2023_BWD

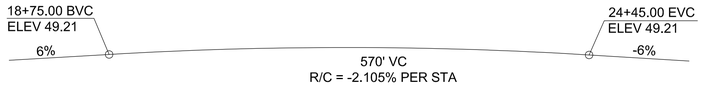

1S-01 / S-01 PROFILE GRADE ("A" LINE)

SCALE: NTS

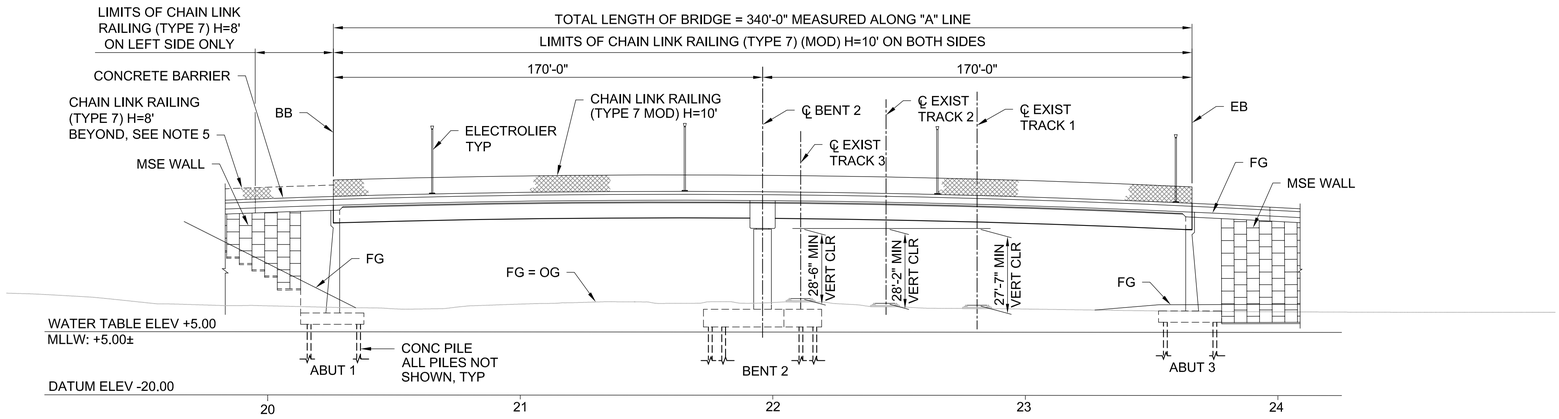

2S-01 / S-01 DEVELOPED ELEVATION

SCALE: 1"=30'

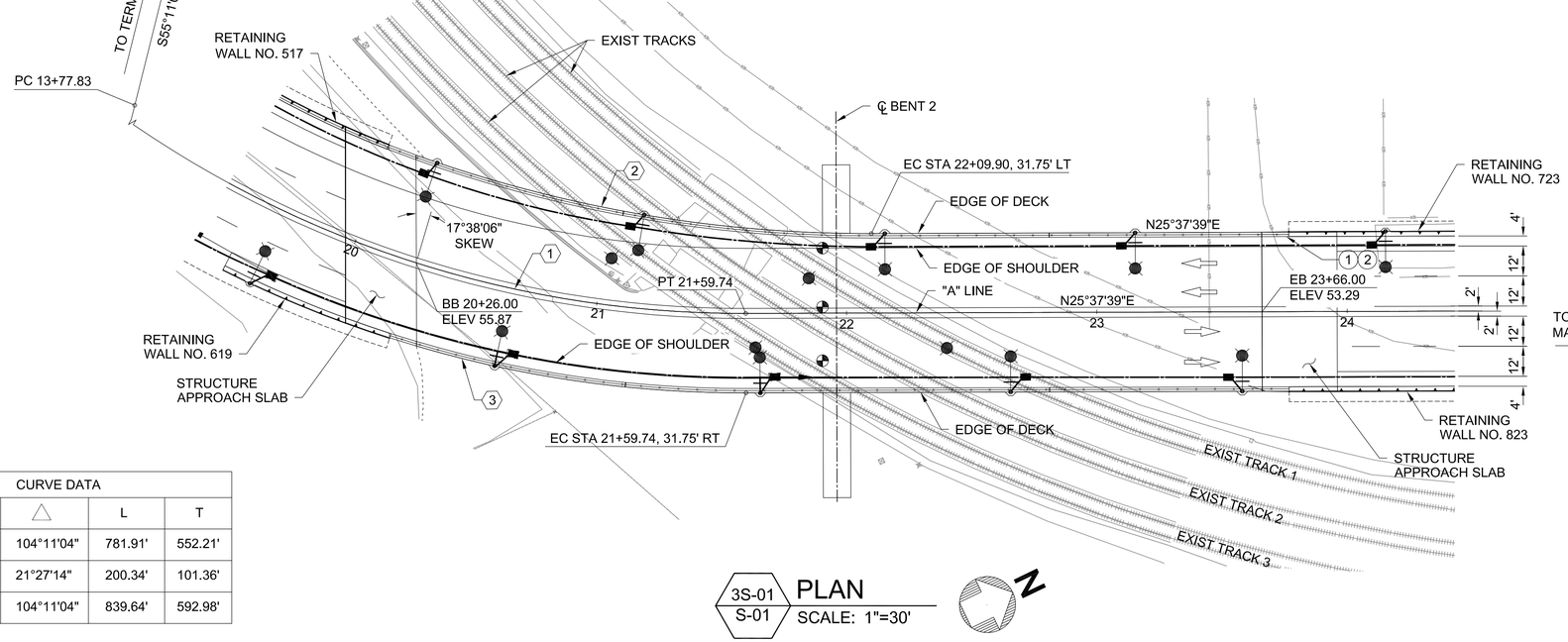

3S-01 / S-01 PLAN

SCALE: 1"=30'

CURVE DATA				
⬡	R	△	L	T
1	430.00'	104°11'04"	781.91'	552.21'
2	535.03'	21°27'14"	200.34'	101.36'
3	461.75'	104°11'04"	839.64'	592.98'

INDEX TO STRUCTURAL PLANS

SHEET NO.	TITLE
S-01	GENERAL PLAN
S-02	STRUCTURE TYPICAL SECTION
S-03	GENERAL NOTES
S-04	DECK CONTOURS
S-05	FOUNDATION PLAN
S-06	ABUTMENT 1 LAYOUT
S-07	ABUTMENT 3 LAYOUT
S-08	ABUTMENT PILE LAYOUT
S-09	ABUTMENT DETAILS NO. 1
S-10	ABUTMENT DETAILS NO. 2
S-11	ABUTMENT DETAILS NO. 3
S-12	ABUTMENT DETAILS NO. 4
S-13	BENT 2 LAYOUT
S-14	BENT DETAILS NO. 1
S-15	BENT DETAILS NO. 2
S-16	BENT DETAILS NO. 3
S-17	BENT DETAILS NO. 4
S-18	PILE DETAILS
S-19	TYPICAL SECTION NO. 1
S-20	TYPICAL SECTION NO. 2
S-21	GIRDER LAYOUT
S-22	GIRDER DETAILS AND CAMBER DIAGRAM
S-23	DECK REINFORCEMENT
S-24	STRUCTURE APPROACH & DRAINAGE DETAILS NO. 1
S-25	STRUCTURE APPROACH & DRAINAGE DETAILS NO. 2
S-25	JOINT SEAL DETAILS
S-27	CHAIN LINK RAILING (TYPE 7) (MOD)
S-28	LOG OF TEST BORINGS LAYOUT
S-29	LOG OF TEST BORINGS - BRIDGE (1 OF 5)
S-30	LOG OF TEST BORINGS - BRIDGE (2 OF 5)
S-31	LOG OF TEST BORINGS - BRIDGE (3 OF 5)
S-32	LOG OF TEST BORINGS - BRIDGE (4 OF 5)
S-33	LOG OF TEST BORINGS - BRIDGE (5 OF 5)

PLAN SYMBOLS

CALTRANS STADNDARD PLAN SHEET NO.

DETAIL NO.

NOTES

1. FOR STRUCTURE TYPICAL SECTION, SEE S-02.
2. FOR GENERAL NOTES, SEE S-03.
3. FOR RETAINING WALLS, SEE RW SHEETS.
4. FOR LIGHTING INFORMATION, SEE EL SHEETS.
5. FOR CHAIN LINK RAILING (TYPE 7) H=8', SEE RW-30

LEGEND

- POINT OF MINIMUM VERTICAL CLEARANCE
- DIRECTION OF TRAFFIC
- ELECTROLIER, SEE NOTE 5
- SOFFIT LIGHTING
- (1) PAINT "BRIDGE NO." AND YEAR OF CONSTRUCTION PER CALTRANS STANDARD PLANS
- (2) PAINT "TERMINAL ISLAND GRADE SEPARATION"

NOTE: THE CONTRACTOR SHALL VERIFY ALL CONTROLLING FIELD DIMENSIONS BEFORE ORDERING OR FABRICATING ANY MATERIAL

SHEET ____ OF 400

NO.	DATE	DRAWN	REVISIONS -	CHK'D	APP'D
			NOT FOR CONSTRUCTION		

NO.	DATE	DRAWN	REVISIONS -	CHK'D	APP'D
			80% DESIGN		

Jacobs
2050 MICHELSON DRIVE, SUITE 150
IRVINE, CA 92612
T: (949) 224-7500
F: (949) 224-7501

SCALE:	1"=30'
DRAWN:	S. LEONG
CHECKED:	B. DENG
DESIGNED:	D. GUEST
ENGINEER / ARCHITECT	B. DENG

TERMINAL ISLAND GRADE SEPARATION

GENERAL PLAN

THE PORT OF LOS ANGELES
ENGINEERING DIVISION
425 S. PALOS VERDES STREET SAN PEDRO CA 90731-3309

DRAWING NUMBER 1-3497

SHEET NUMBER S-01

POLAPRO1_04/2021_BWD

NOTES

1. FOR PLAN AND DEVELOPED ELEVATION, SEE S-01.
2. ALL PILES NOT SHOWN.
3. OUTRIGGER AND COLUMNS ARE MASS CONCRETE. CONTRACTOR SHALL HAVE MITIGATION FOR MASS CONCRETE CONSTRUCTION FOR CRACK CONTROL.

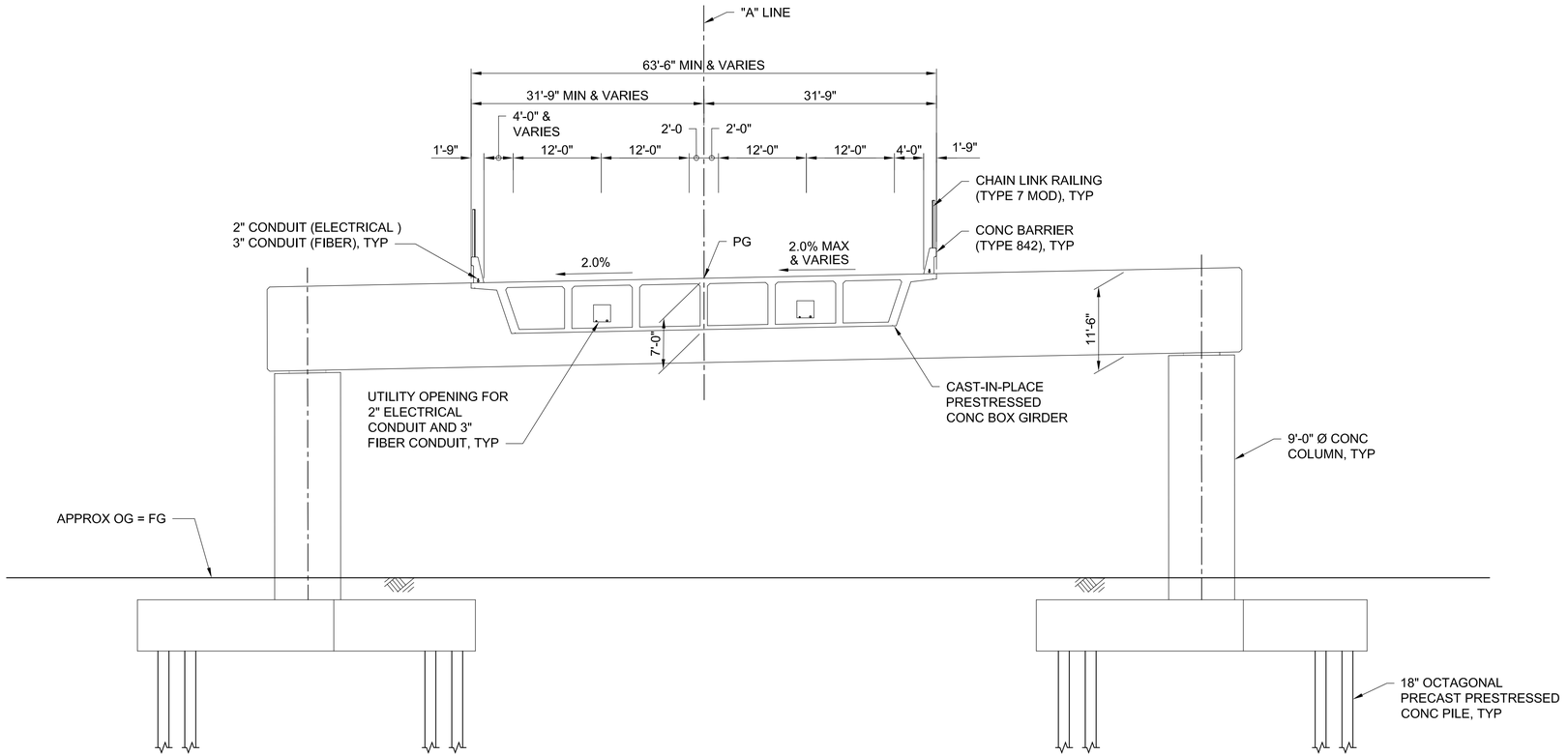

1S-02 / S-02 STRUCTURE TYPICAL SECTION

SCALE: 1"=10'

NOTE: THE CONTRACTOR SHALL VERIFY ALL CONTROLLING FIELD DIMENSIONS BEFORE ORDERING OR FABRICATING ANY MATERIAL

SHEET ____ OF 400

NO.	DATE	DRAWN	REVISIONS -	CHK'D	APP'D
			NOT FOR CONSTRUCTION		

NO.	DATE	DRAWN	REVISIONS -	CHK'D	APP'D
			80% DESIGN		

Jacobs
2600 MICHELSON DRIVE, SUITE 500
IRVINE, CA 92612
T: (949) 224-7500
F: (949) 224-7501

SCALE:	AS SHOWN
DRAWN:	S. LEONG
CHECKED:	B. DENG
DESIGNED:	D. GUEST
ENGINEER / ARCHITECT	B. DENG

TERMINAL ISLAND GRADE SEPARATION

STRUCTURE TYPICAL SECTION

THE PORT OF LOS ANGELES
ENGINEERING DIVISION
425 S. PALOS VERDES STREET SAN PEDRO CA 90731-3309

DRAWING NUMBER	SHEET NUMBER
1-3497	S-02

GENERAL NOTES
LOAD AND RESISTANCE FACTOR DESIGN

DESIGN:	AASHTO LRFD BRIDGE DESIGN SPECIFICATIONS, 8TH EDITION WITH INTERIMS THROUGH JUNE 2025. STRUCTURAL TECHNICAL POLICIES AS OF NOVEMEMBER 2024.
SEISMIC DESIGN:	CALTRANS SEISMIC DESIGN CRITERIA VERSION 2.1 (SDC 2.1) DATED JANUARY 2025.
DEAD LOAD:	INCLUDES 35 PSF FOR FUTURE WEARING SURFACE AND 0.10 KLF FOR UTILITY LOAD
LIVE LOAD:	HL93, TANDEM AND PERMIT DESIGN LOAD
SEISMIC LOADING:	SITE SPECIFIC ARS AS SHOWN MODIFIED SDC ARS CURVE FOR SOIL PROFILE (PEAK ROCK ACCELERATION = 0.653g)

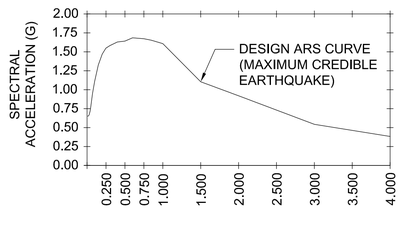

REINFORCED CONCRETE:	fy = 60 KSI f'c = 3.6 KSI (MIN) @ 28 DAYS n = 8 (MAX)
PRESTRESSED CONCRETE:	SEE "PRESTRESSING NOTES" ON S-13 AND S-21

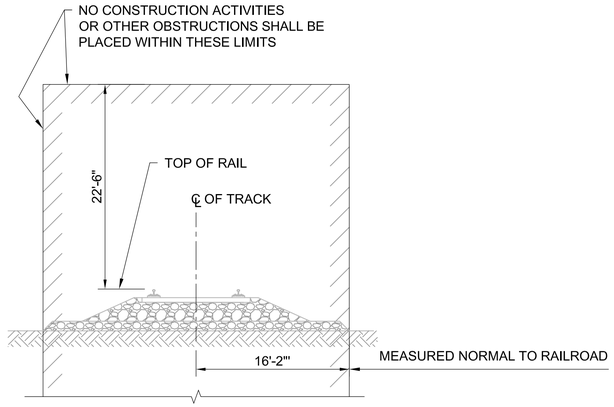

1S-03 / S-03 MINIMUM CONSTRUCTION CLEARANCE ENVELOPE
SCALE: NTS

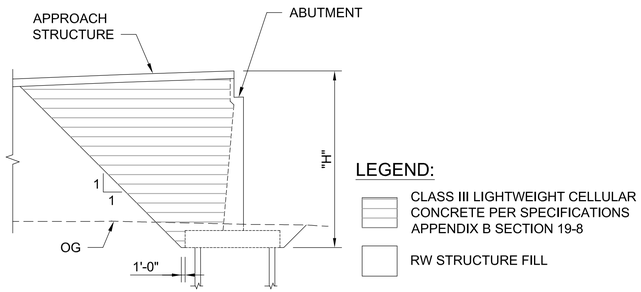

3S-03 / S-03 LIMITS OF LIGHT WEIGHT CELLULAR CONCRETE FILL
SCALE: NTS

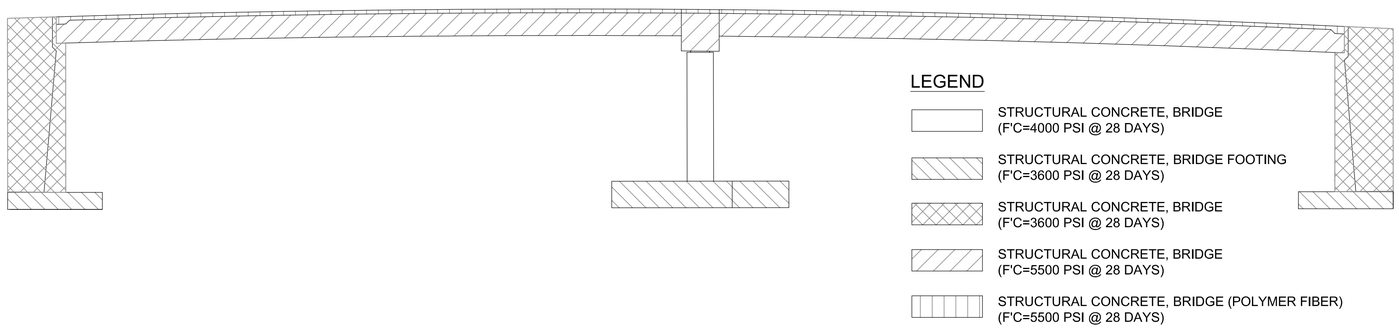

4S-03 / S-03 CONCRETE STRENGTH AND TYPE LIMITS
SCALE: NTS

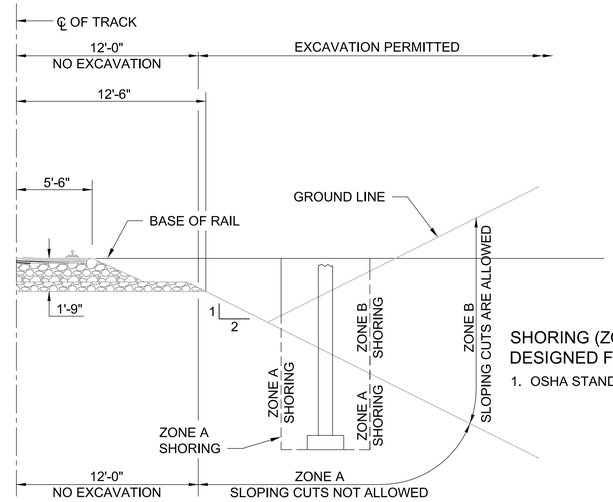

SHORING (ZONE B) DESIGNED FOR:
1. OSHA STANDARD LOADS.

SHORING (ZONE A) DESIGNED FOR:
1. RAIROAD LIVE LOAD SURCHARGE.
2. OSHA STANDARD LOADS.

ALL SHORING WITHIN THE LIMITS OF ZONE A MUST BE PLACED PRIOR TO THE START OF EXCAVATION.

2S-03 / S-03 GENERAL EXCAVATION ZONES
SCALE: NTS

CALTRANS STANDARD PLANS 2024 EDITION

A3A	ABBREVIATIONS (SHEET 1 OF 3)
A3B	ABBREVIATIONS (SHEET 2 OF 3)
A3C	ABBREVIATIONS (SHEET 3 OF 3)
A10A	LEGEND OF LINES AND SYMBOLS (SHEET 1 OF 5)
A10B	LEGEND OF LINES AND SYMBOLS (SHEET 2 OF 5)
A10C	LEGEND OF LINES AND SYMBOLS (SHEET 3 OF 5)
A10D	LEGEND OF LINES AND SYMBOLS (SHEET 4 OF 5)
A10E	LEGEND OF LINES AND SYMBOLS (SHEET 5 OF 5)
A62C	LIMITS OF PAYMENT FOR EXCAVATION AND BACKFILL BRIDGE
B0-1	BRIDGE DETAILS
B0-3	BRIDGE DETAILS
B0-5	BRIDGE DETAILS
B0-13	BRIDGE DETAILS
B7-1	BOX GIRDER DETAILS
B7-10	UTILITY OPENING BOX GIRDER
B8-5	CAST-IN-PLACE POST-TENSIONED GIRDER DETAILS
B9-1	STRUCTURE APPROACH TYPE N (30)
B9-6	STRUCTURE APPROACH DRAINAGE DETAILS
B11-81	CONCRETE BARRIER TYPE 842 DETAILS NO. 1
B11-82	CONCRETE BARRIER TYPE 842 DETAILS NO. 2
B11-82A	CONCRETE BARRIER TYPE 842 DETAILS NO. 3
B14-3	COMMUNICATION AND SPRINKLER CONTROL CONDUITS (CONDUIT LESS THAN 4")
B14-5	WATER SUPPLY LINE (DETAILS) (PIPE SIZES LESS THAN 4")
ES-9C	ELECTRICAL SYSTEMS (STRUCTURE PULL BOX)
ES-9D	ELECTRICAL SYSTEMS (STRUCTURE PULL BOX INSTALLATIONS)
ES-9E	ELECTRICAL SYSTEMS (FLUSH-MOUNTED SOFFIT, PENDANT SOFFIT AND WALL-MOUNTED LUMINAIRE STRUCTURE INSTALLATIONS)

NOTE: THE CONTRACTOR SHALL VERIFY ALL CONTROLLING FIELD DIMENSIONS BEFORE ORDERING OR FABRICATING ANY MATERIAL

SHEET ____ OF 400

NO.	DATE	DRAWN	REVISIONS -	CHK'D	APP'D
			NOT FOR CONSTRUCTION		
			80% DESIGN		

Jacobs
2600 MICHELSON DRIVE, SUITE 500
IRVINE, CA 92612
T: (949) 224-7500
F: (949) 224-7501

SCALE: AS SHOWN
DRAWN: S. LEONG
CHECKED: B. DENG
DESIGNED: D. GUEST
ENGINEER / ARCHITECT
B. DENG

TERMINAL ISLAND GRADE SEPARATION
GENERAL NOTES

THE PORT OF LOS ANGELES
ENGINEERING DIVISION
425 S. PALOS VERDES STREET SAN PEDRO CA 90731-3309

DRAWING NUMBER 1-3497
SHEET NUMBER S-03

POLAPRD1_04/2023_BWD

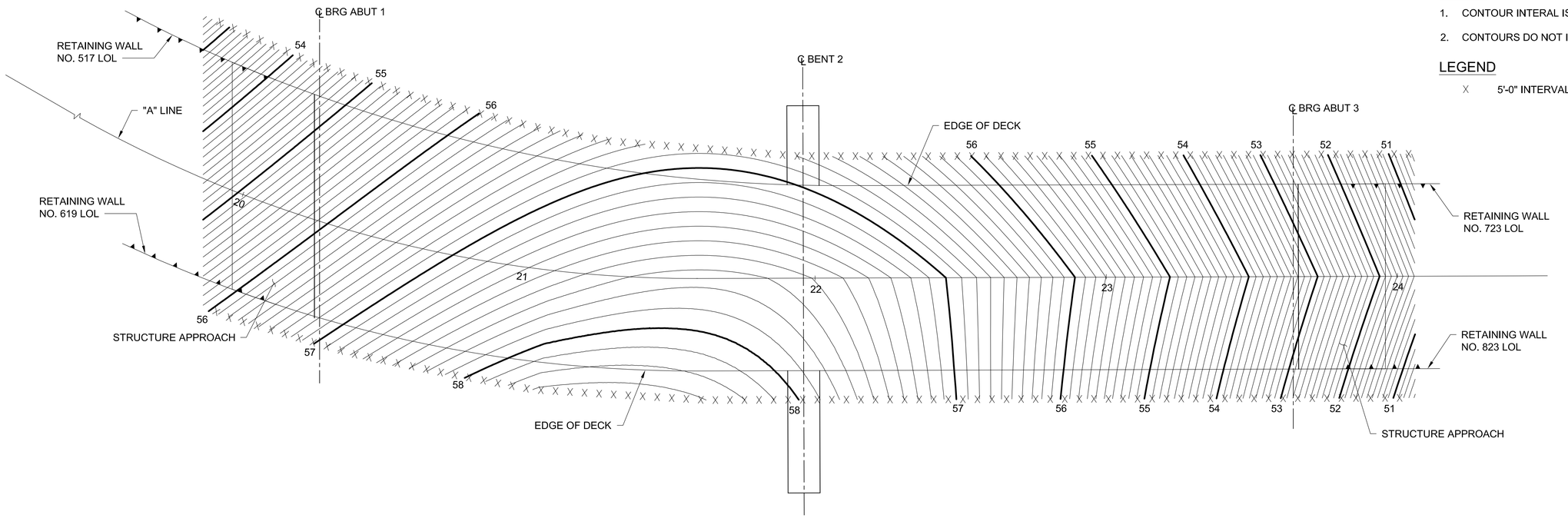

NOTES

1. CONTOUR INTERAL IS 0.10'.
2. CONTOURS DO NOT INCLUDE CAMBER.

LEGEND

X 5'-0" INTERVALS ALONG "A" LINE

1S-04 / S-04 **PLAN**
SCALE: 1'=20'

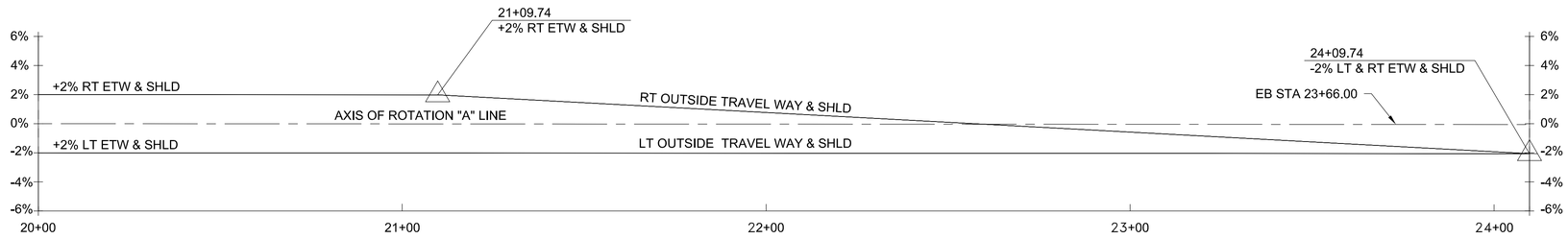

2S-04 / S-04 **SUPER ELEVATION DIAGRAM**
SCALE: NTS

NOTE: THE CONTRACTOR SHALL VERIFY ALL CONTROLLING FIELD DIMENSIONS BEFORE ORDERING OR FABRICATING ANY MATERIAL

SHEET ____ OF 400

NO.	DATE	DRAWN	REVISIONS -	CHK'D	APP'D
			NOT FOR CONSTRUCTION		

NO.	DATE	DRAWN	REVISIONS -	CHK'D	APP'D
			80% DESIGN		

Jacobs
2600 MICHELSON DRIVE, SUITE 500
IRVINE, CA 92612
T: (949) 224-7500
F: (949) 224-7501

SCALE: AS SHOWN
DRAWN: S. LEONG
CHECKED: B. DENG
DESIGNED: D. GUEST
ENGINEER / ARCHITECT
B. DENG

TERMINAL ISLAND GRADE SEPARATION

DECK CONTOURS

THE PORT OF LOS ANGELES
ENGINEERING DIVISION
425 S. PALOS VERDES STREET SAN PEDRO CA 90731-3309

DRAWING NUMBER 1-3497
SHEET NUMBER S-04

C:\Users\ZucchiPlDC\ACCDocs\Jacobs\US CA_d3391901_POLA Terminal Island GS\Project Files\30 PROJECT DATA\PID\STRUCTURE\Drawings\1-3497 S-04.dwg, 8/11/2025 5:31:35 AM
POLAPRO1_042023_BW3

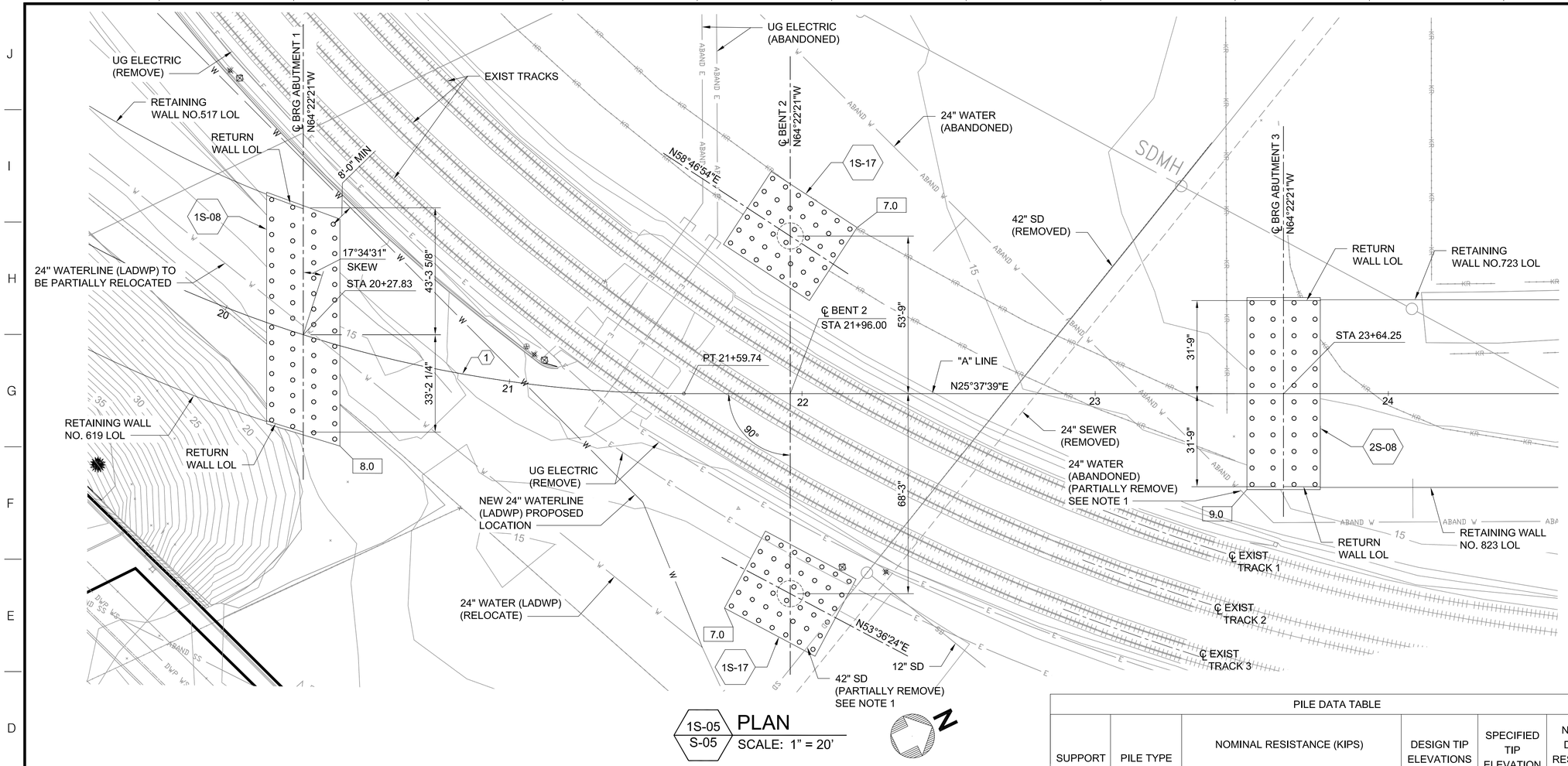

BENCH MARK

FOR SURVEY CONTROL, SEE GN-05.

LEGEND

XX.X — INDICATES BOTTOM OF FOOTING ELEVATION

○ — 18" OCTAGONAL PRECAST PRESTRESSED PILE

NOTES:

1. FOR ADDITIONAL UTILITY DETAILS, SEE U SHEETS.

CURVE DATA				
⬡	R	△	L	T
1	430.00'	104°11'04"	781.91'	552.21'

PILE DATA TABLE						
SUPPORT	PILE TYPE	NOMINAL RESISTANCE (KIPS)		DESIGN TIP ELEVATIONS (FEET)	SPECIFIED TIP ELEVATION (FEET)	NOMINAL DRIVING RESISTANCE REQUIRED (KIPS)
		COMPRESSION	TENSION			
ABUT 1	18-INCH OCTAGONAL CONCRETE	380	160	-85 (a-I) -83 (a-II) -55 (b) -72 (c) -34 (d)	-85	890
BENT 2 (LEFT)		490	230	-65 (a-I) -93 (a-II) -65 (b) -73 (c) -34 (d)	-93	970
BENT 2 (RIGHT)		490	230	-65 (a-I) -93 (a-II) -65 (b) -74 (c) -34 (d)	-93	970
ABUT 3		360	130	-85 (a-I) -82 (a-II) -48 (b) -71 (c) -34 (d)	-85	890

NOTES:

1. DESIGN TIP ELEVATION IS CONTROLLED BY: (a-I) COMPRESSION (STRENGTH LIMIT), (a-II) COMPRESSION (EXTREME EVENT), (b) TENSION, (c) SETTLEMENT, AND (d) LATERAL LOAD.
2. SPECIFIED TIP ELEVATIONS AT ABUTMENT SHALL NOT BE RAISED ABOVE TIP ELEVATIONS FOR SETTLEMENT AND LATERAL LOAD.
3. LIQUEFACTION-INDUCED DOWNDRAG LOAD IS 200 KIPS. LIQUEFIABLE SOIL LAYERS EXTEND FROM ELEVATION +5 TO -55 FEET.

NOTE: THE CONTRACTOR SHALL VERIFY ALL CONTROLLING FIELD DIMENSIONS BEFORE ORDERING OR FABRICATING ANY MATERIAL

SHEET ____ OF 400

NO.	DATE	DRAWN	REVISIONS -	CHK'D	APP'D
			NOT FOR CONSTRUCTION		

NO.	DATE	DRAWN	REVISIONS -	CHK'D	APP'D
			80% DESIGN		

Jacobs
2600 MICHELSON DRIVE, SUITE 550
IRVINE, CA 92612
T: (949) 224-7500
F: (949) 224-7501

SCALE: AS SHOWN
DRAWN: S. LEONG
CHECKED: B. DENG
DESIGNED: D. GUEST
ENGINEER / ARCHITECT
B. DENG

TERMINAL ISLAND GRADE SEPARATION

FOUNDATION PLAN

THE PORT OF LOS ANGELES
ENGINEERING DIVISION
425 S. PALOS VERDES STREET SAN PEDRO CA 90731-3309

DRAWING NUMBER 1-3497
SHEET NUMBER S-05

POLAPRO1_04/2021_BWD

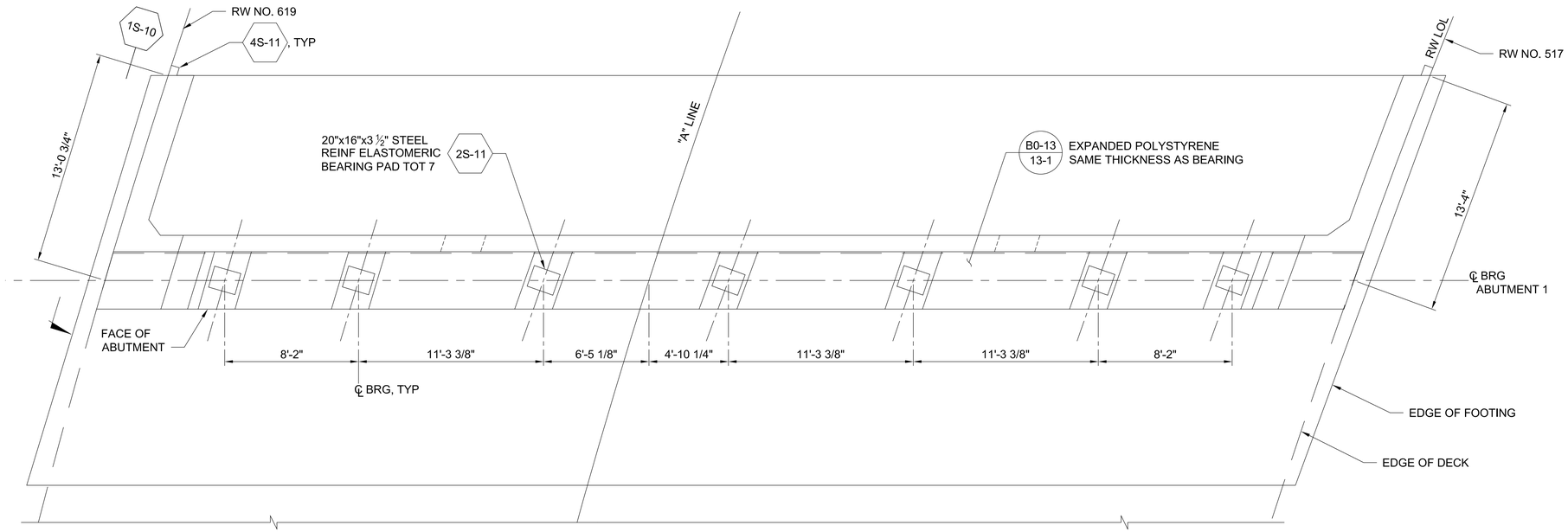

1S-06 / S-06 **PLAN**
SCALE: 1/4" - 1'-0"

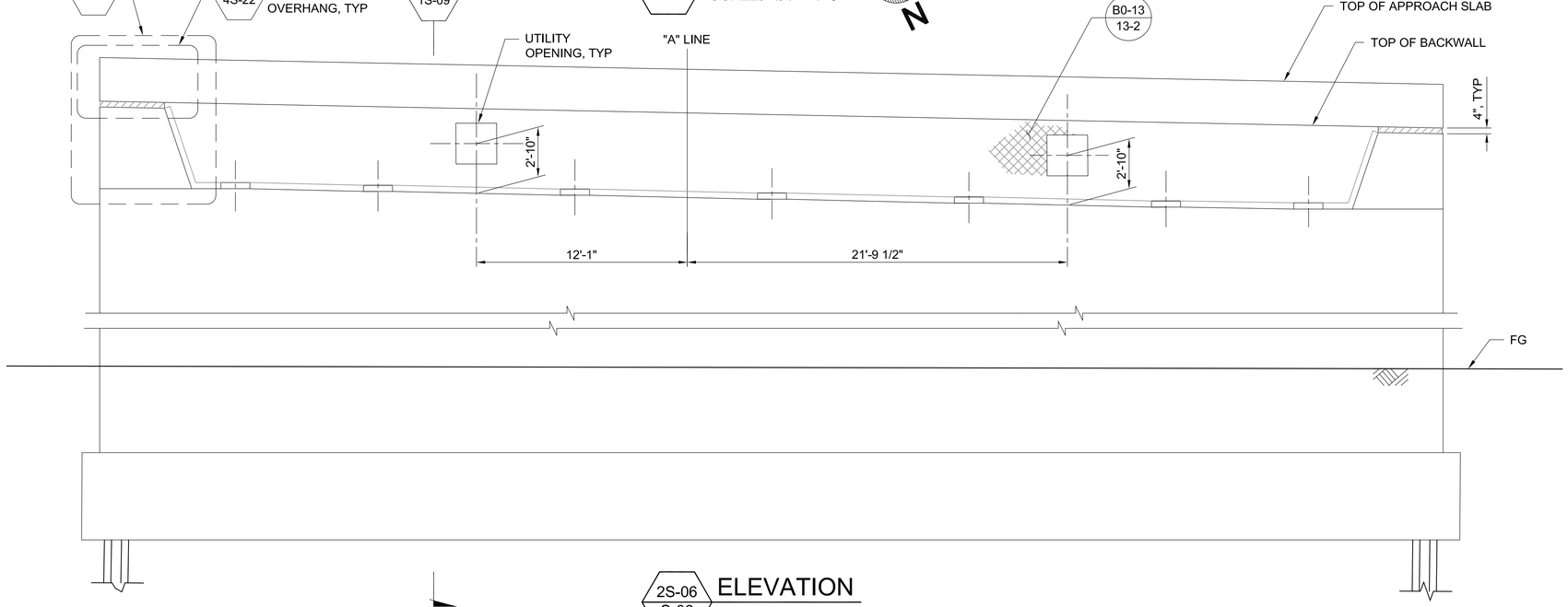

2S-06 / S-06 **ELEVATION**
SCALE: 1/4" =1'-0"

NOTES

1. CONCRETE BARRIER NOT SHOWN.
2. ALL PILES NOT SHOWN FOR CLARITY.

NOTE: THE CONTRACTOR SHALL VERIFY ALL CONTROLLING FIELD DIMENSIONS BEFORE ORDERING OR FABRICATING ANY MATERIAL

SHEET ____ OF 400

NO.	DATE	DRAWN	REVISIONS -	CHK'D	APP'D
			NOT FOR CONSTRUCTION		

NO.	DATE	DRAWN	REVISIONS -	CHK'D	APP'D
			80% DESIGN		

Jacobs
2600 MICHELSON DRIVE, SUITE 500
IRVINE, CA 92612
T: (949) 224-7500
F: (949) 224-7501

SCALE: AS SHOWN
DRAWN: S. LEONG
CHECKED: B. DENG
DESIGNED: D. GUEST
ENGINEER / ARCHITECT
B. DENG

TERMINAL ISLAND GRADE SEPARATION

ABUTMENT 1 LAYOUT

THE PORT OF LOS ANGELES
ENGINEERING DIVISION
425 S. PALOS VERDES STREET SAN PEDRO CA 90731-3309

DRAWING NUMBER 1-3497
SHEET NUMBER S-06

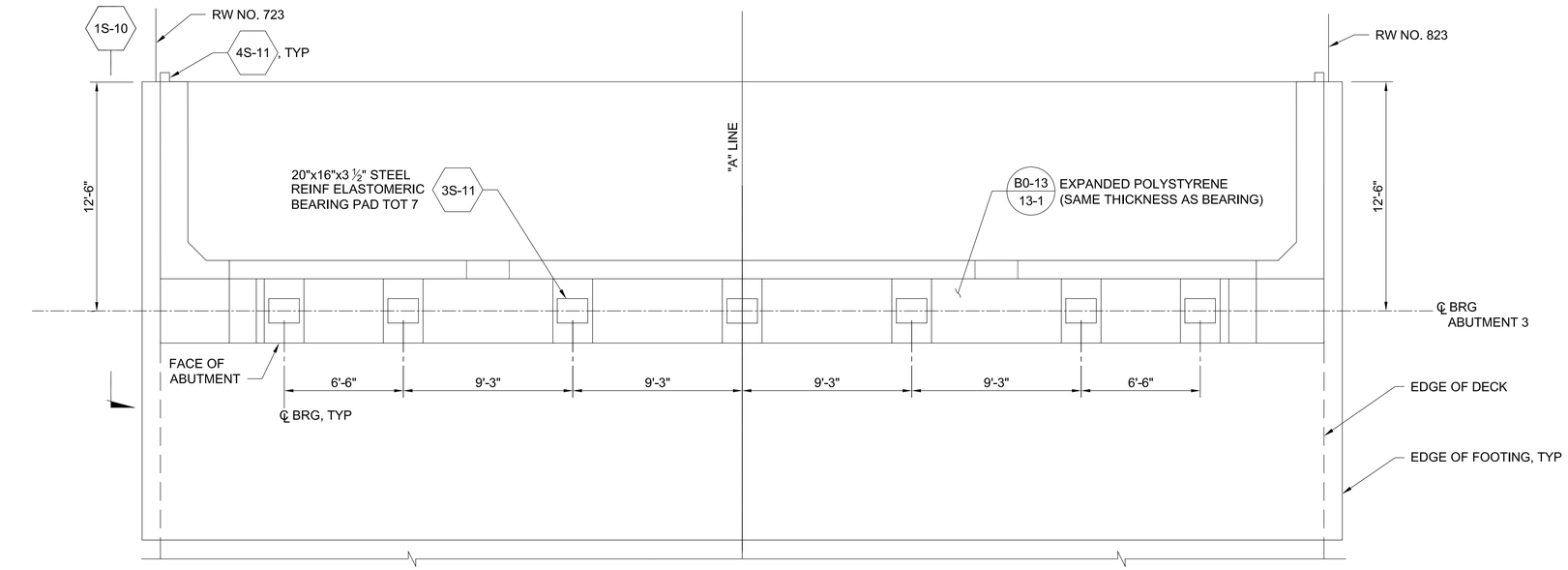

1S-07 / S-07 **PLAN**
SCALE: 1/4"=1'-0"

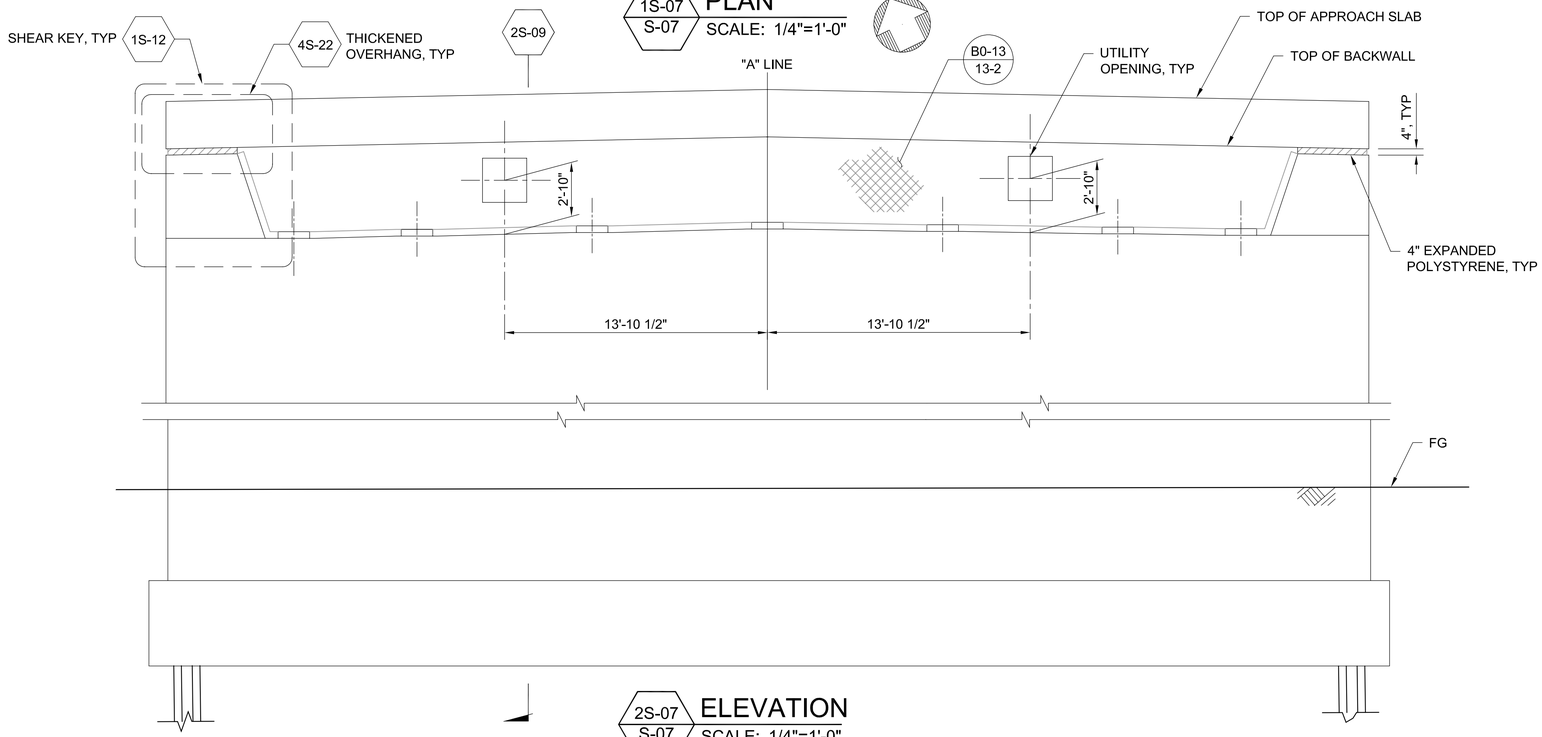

2S-07 / S-07 **ELEVATION**
SCALE: 1/4"=1'-0"

NOTES

1. CONCRETE BARRIER NOT SHOWN.
2. ALL PILES NOT SHOWN FOR CLARITY.

NOTE: THE CONTRACTOR SHALL VERIFY ALL CONTROLLING FIELD DIMENSIONS BEFORE ORDERING OR FABRICATING ANY MATERIAL

SHEET ____ OF 400

NO.	DATE	DRAWN	REVISIONS -	CHK'D	APP'D
			NOT FOR CONSTRUCTION		

NO.	DATE	DRAWN	REVISIONS -	CHK'D	APP'D
			80% DESIGN		

Jacobs
2600 MICHELSON DRIVE, SUITE 500
IRVINE, CA 92612
T: (949) 224-7500
F: (949) 224-7501

SCALE: AS SHOWN
DRAWN: S. LEONG
CHECKED: B. DENG
DESIGNED: D. GUEST
ENGINEER / ARCHITECT
B. DENG

TERMINAL ISLAND GRADE SEPARATION

ABUTMENT 3 LAYOUT

THE PORT OF LOS ANGELES
ENGINEERING DIVISION
425 S. PALOS VERDES STREET SAN PEDRO CA 90731-3309

DRAWING NUMBER 1-3497
SHEET NUMBER S-07

POLAPRO1_04/2023_BWD

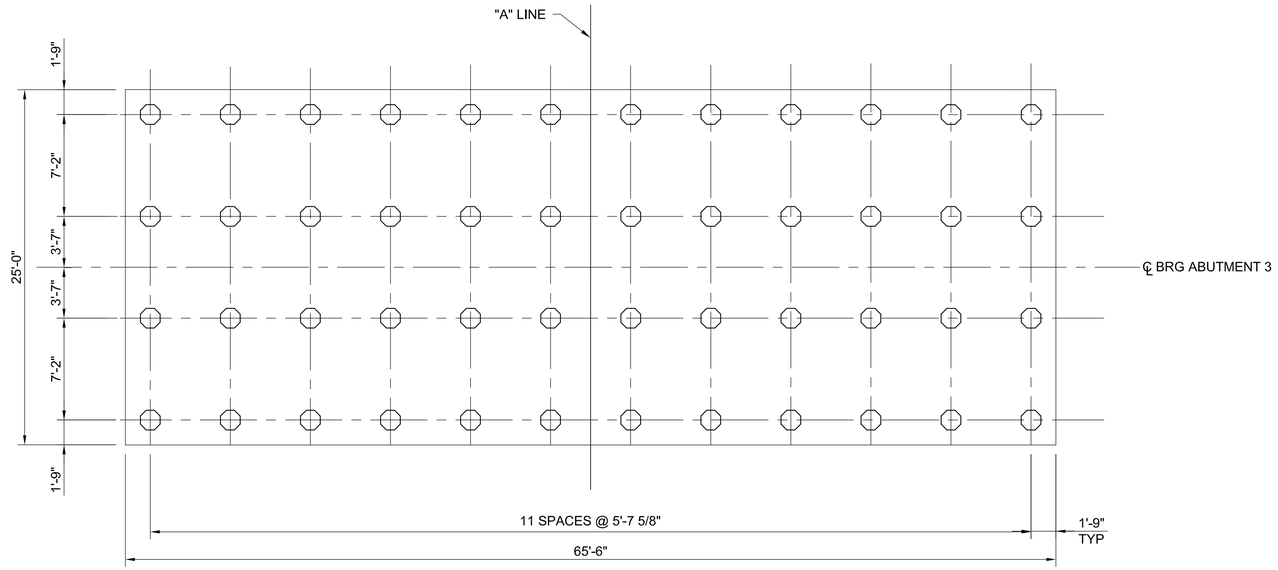

1S-08 / 1S-05 ABUTMENT 3 PILE LAYOUT

SCALE: 3/16"=1'-0"

N

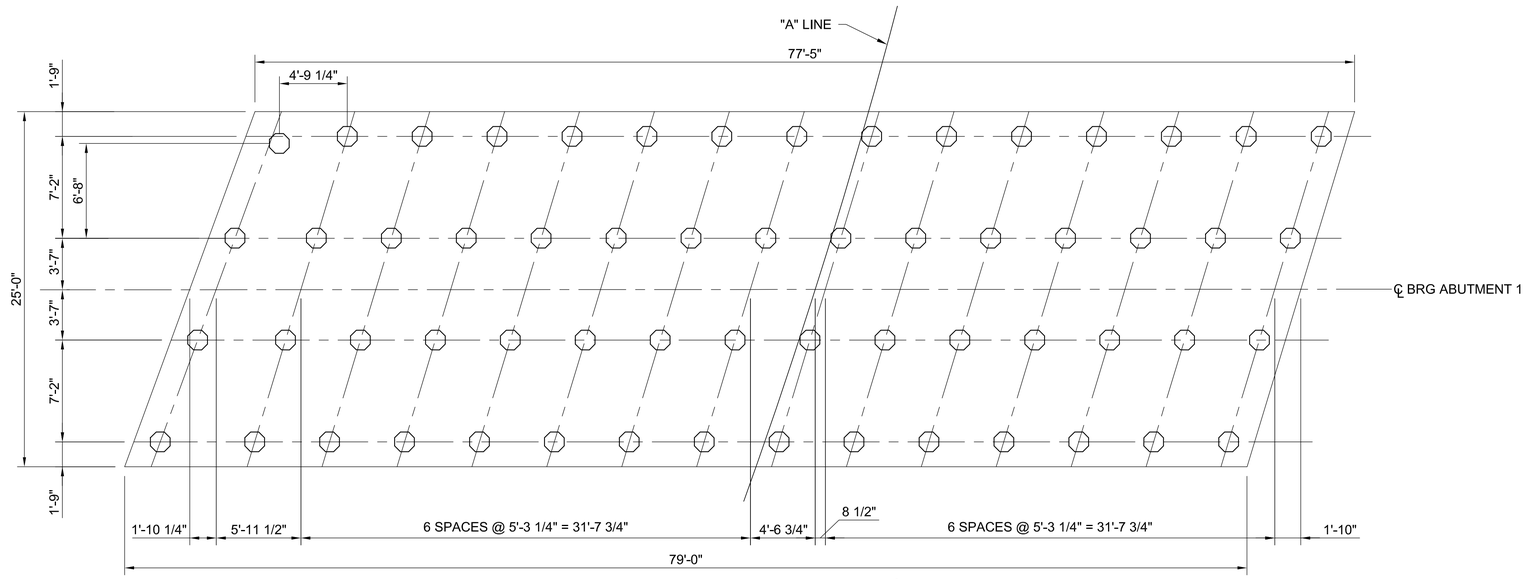

2S-08 / 1S-05 ABUTMENT 1 PILE LAYOUT

SCALE: 3/16"=1'-0"

N

NOTE: THE CONTRACTOR SHALL VERIFY ALL CONTROLLING FIELD DIMENSIONS BEFORE ORDERING OR FABRICATING ANY MATERIAL

SHEET ____ OF 400

NO.	DATE	DRAWN	REVISIONS -	CHK'D	APP'D
			NOT FOR CONSTRUCTION		

NO.	DATE	DRAWN	REVISIONS -	CHK'D	APP'D
			80% DESIGN		

Jacobs
2600 MICHELSON DRIVE, SUITE 500
IRVINE, CA 92612
T: (949) 224-7500
F: (949) 224-7501

SCALE: AS SHOWN
DRAWN: S. LEONG
CHECKED: B. DENG
DESIGNED: D. GUEST
ENGINEER / ARCHITECT
B. DENG

TERMINAL ISLAND GRADE SEPARATION

ABUTMENT PILE LAYOUT

THE PORT OF LOS ANGELES
ENGINEERING DIVISION
425 S. PALOS VERDES STREET SAN PEDRO CA 90731-3309

DRAWING NUMBER 1-3497

SHEET NUMBER S-08

POLAPRO1_040223_BWD

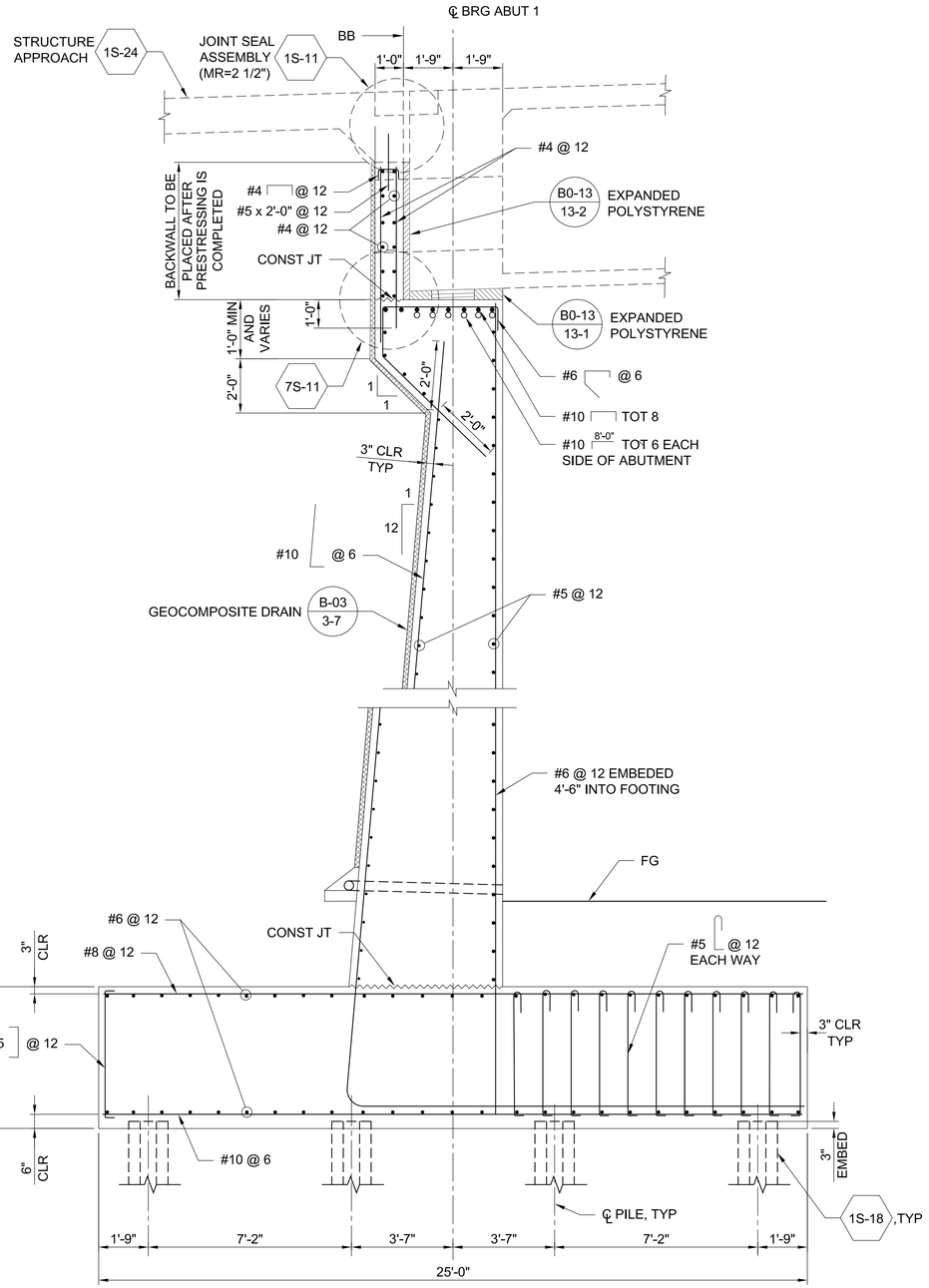

1S-09 / 2S-06 SECTION
SCALE: 3/8" =1'-0"

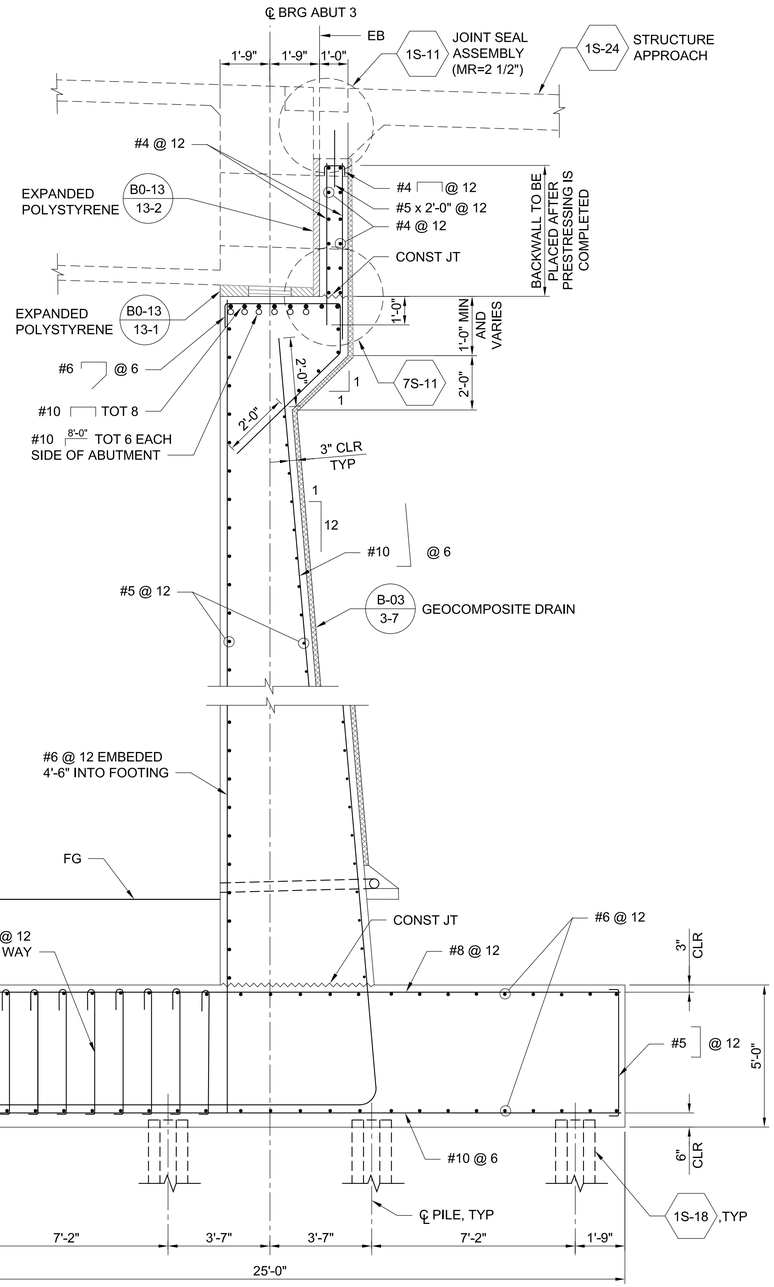

2S-09 / 2S-07 SECTION
SCALE: 3/8" =1'-0"

NOTE: THE CONTRACTOR SHALL VERIFY ALL CONTROLLING FIELD DIMENSIONS BEFORE ORDERING OR FABRICATING ANY MATERIAL

SHEET ___ OF 400

NO.	DATE	DRAWN	REVISIONS -	CHK'D	APP'D
			NOT FOR CONSTRUCTION		

NO.	DATE	DRAWN	REVISIONS -	CHK'D	APP'D
			80% DESIGN		

Jacobs
2050 MICHELSON DRIVE, SUITE 150
IRVINE, CA 92612
T: (949) 224-7500
F: (949) 224-7501

SCALE: AS SHOWN
DRAWN: S. LEONG
CHECKED: B. DENG
DESIGNED: D. GUEST
ENGINEER / ARCHITECT
B. DENG

TERMINAL ISLAND GRADE SEPARATION

ABUTMENT DETAIL NO. 1

THE PORT OF LOS ANGELES
ENGINEERING DIVISION
425 S. PALOS VERDES STREET SAN PEDRO CA 90731-3309

DRAWING NUMBER 1-3497
SHEET NUMBER S-09

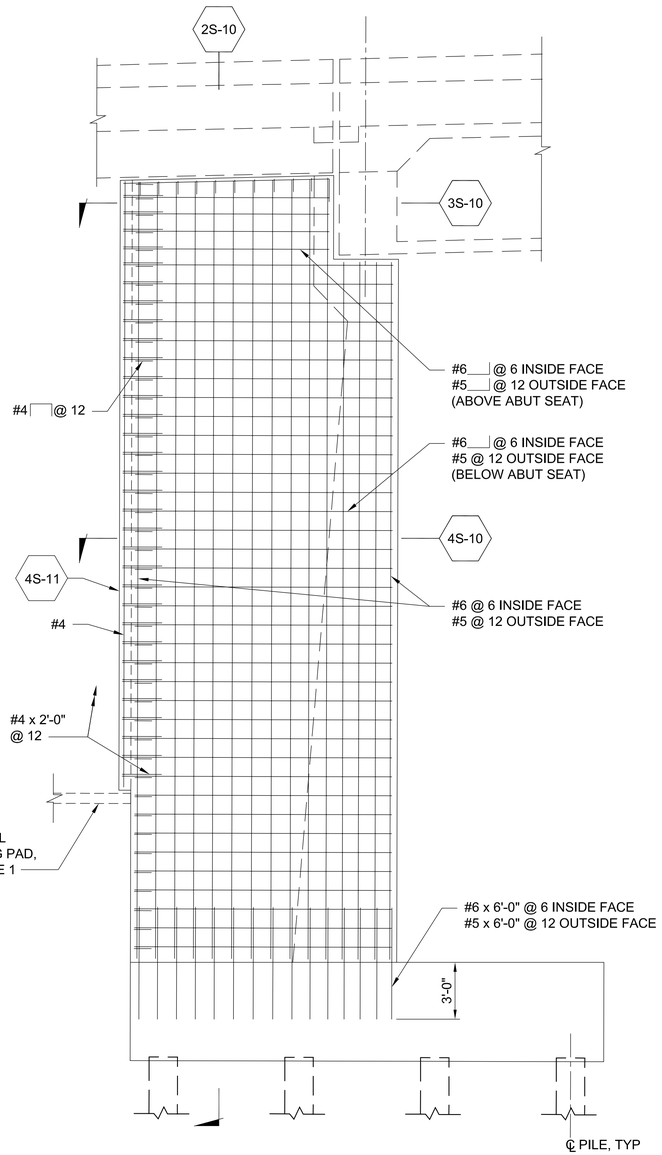

1S-10 / 1S-06, 1S-07 ABUTMENT RETURN WALL ELEVATION
SCALE: 1/4"=1'-0"

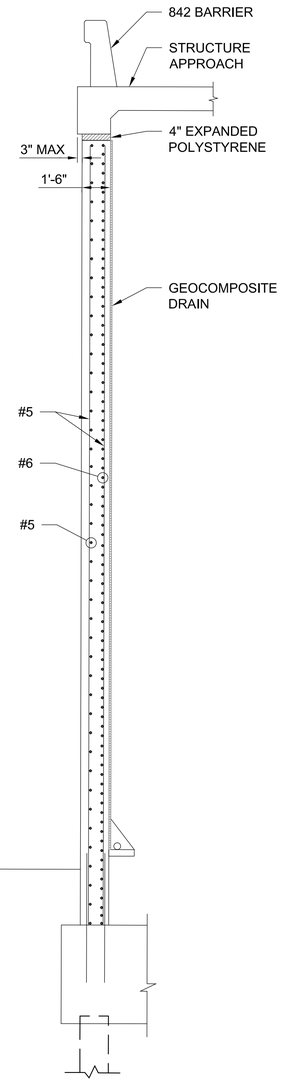

2S-10 / 1S-10 SECTION
SCALE: 1/4 = 1'-0"

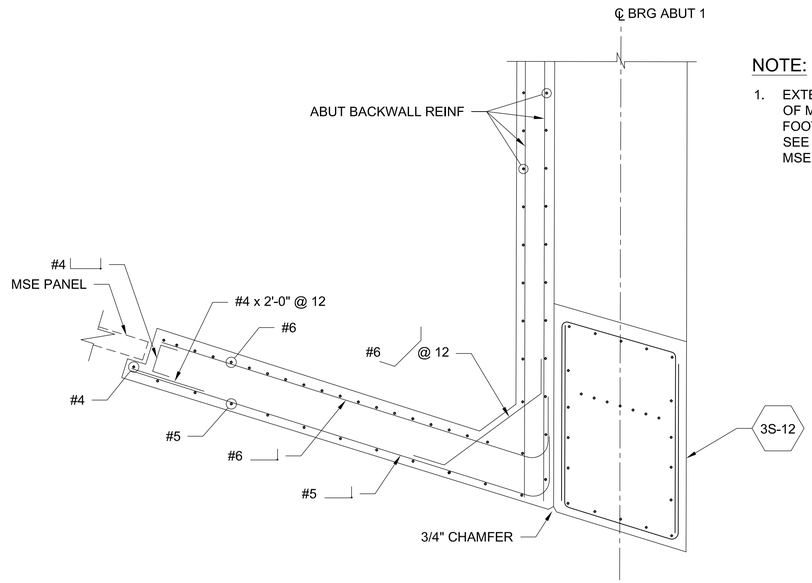

3S-10 / 1S-10 SECTION
SCALE: 1/2"=1'-0"

NOTE:

1. EXTEND RETURN WALL KEY TO TOP OF MSE LEVELING PAD OR TOP OF FOOTING, WHICHEVER IS HIGHER. SEE RW-03 THROUGH RW-08 FOR MSE LEVELING PAD ELEVATIONS.

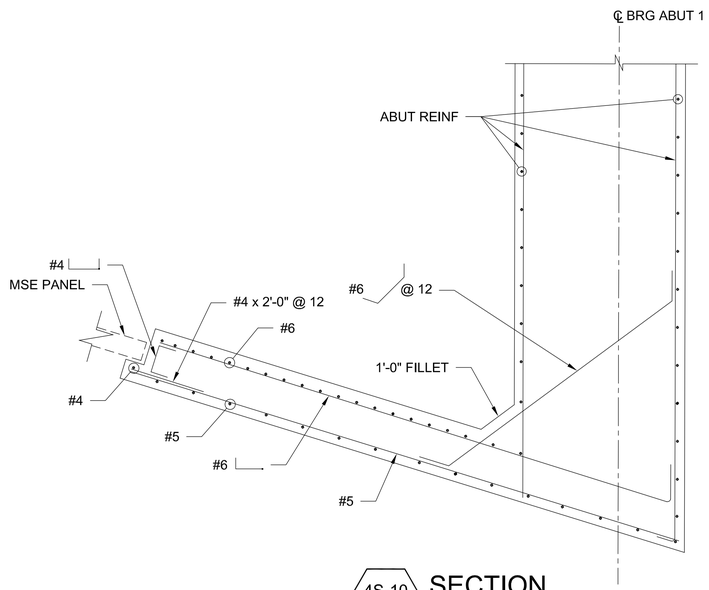

4S-10 / 1S-10 SECTION
SCALE: 1/2"=1'-0"

NOTE: THE CONTRACTOR SHALL VERIFY ALL CONTROLLING FIELD DIMENSIONS BEFORE ORDERING OR FABRICATING ANY MATERIAL

SHEET ____ OF 400

NO.	DATE	DRAWN	REVISIONS -	CHK'D	APP'D
			NOT FOR CONSTRUCTION		

NO.	DATE	DRAWN	REVISIONS -	CHK'D	APP'D
			80% DESIGN		

Jacobs
2600 MICHELSON DRIVE, SUITE 550
IRVINE, CA 92612
T: (949) 224-7500
F: (949) 224-7501

SCALE: AS SHOWN
DRAWN: S. LEONG
CHECKED: B. DENG
DESIGNED: D. GUEST
ENGINEER / ARCHITECT
B. DENG

TERMINAL ISLAND GRADE SEPARATION

ABUTMENT DETAILS NO. 2

THE PORT OF LOS ANGELES
ENGINEERING DIVISION
425 S. PALOS VERDES STREET SAN PEDRO CA 90731-3309

DRAWING NUMBER 1-3497
SHEET NUMBER S-10

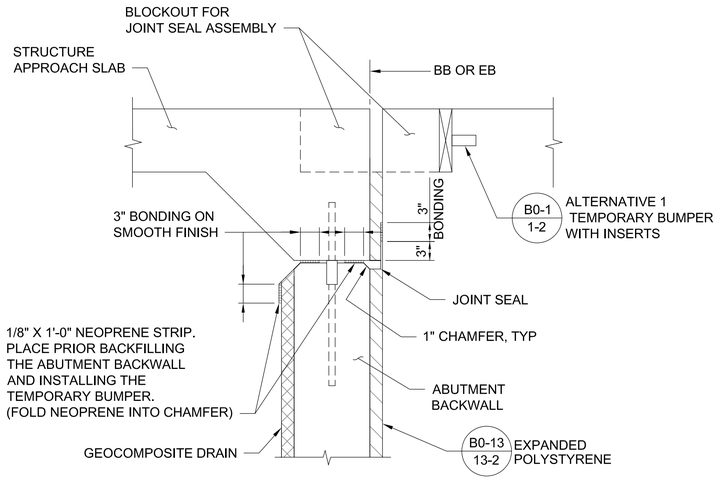

1S-11 / 1S-09, 2S-09 — **JOINT PROTECTION DETAIL** SCALE: NTS

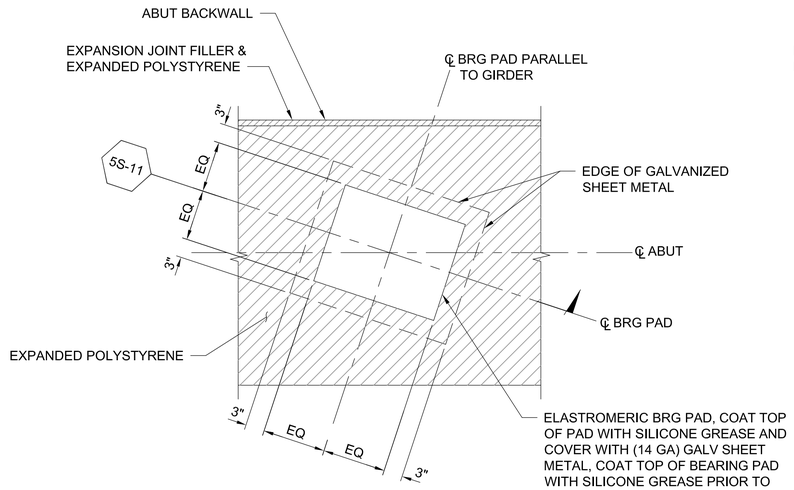

2S-11 / 1S-06 — **PLAN** SCALE: NTS

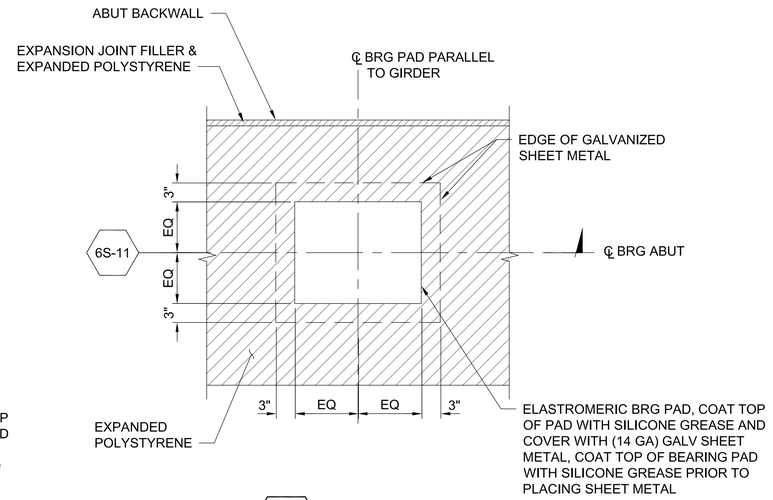

3S-11 / 1S-07 — **PLAN** SCALE: NTS

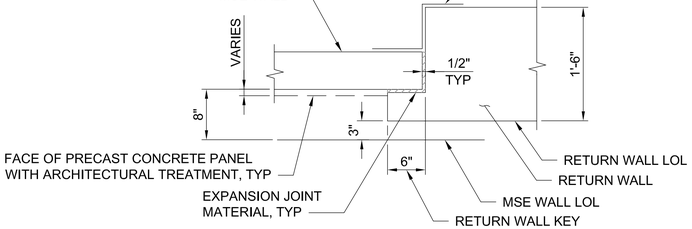

4S-11 / 1S-06, 1S-07, 1S-10 — **PRECAST PANEL TO CONCRETE WALL JOINT DETAILS** SCALE: NTS

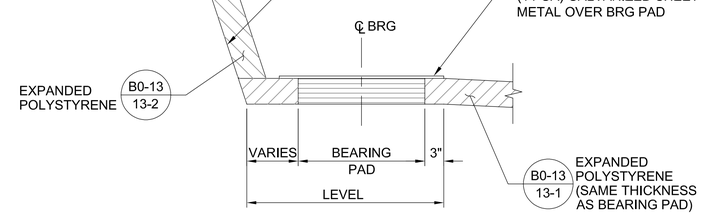

5S-11 / 2S-11 — **DETAIL** SCALE: NTS

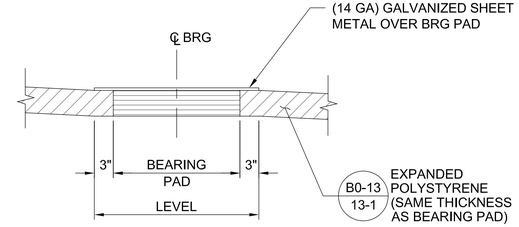

6S-11 / 3S-11 — **SECTION** SCALE: NTS

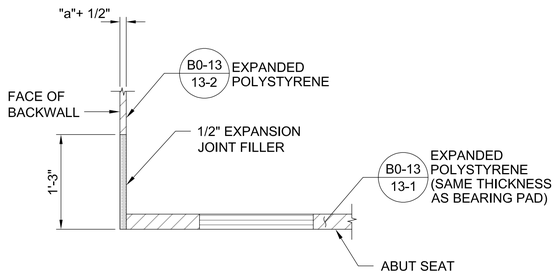

7S-11 / 1S-09, 2S-09 — **DETAILS** SCALE: NTS

NOTE: THE CONTRACTOR SHALL VERIFY ALL CONTROLLING FIELD DIMENSIONS BEFORE ORDERING OR FABRICATING ANY MATERIAL

SHEET ____ OF 400

NO.	DATE	DRAWN	REVISIONS -	CHK'D	APP'D
			NOT FOR CONSTRUCTION		

NO.	DATE	DRAWN	REVISIONS -	CHK'D	APP'D
			80% DESIGN		

Jacobs
2600 MICHELSON DRIVE, SUITE 500
IRVINE, CA 92612
T: (949) 224-7500
F: (949) 224-7501

SCALE: AS SHOWN
DRAWN: S. LEONG
CHECKED: B. DENG
DESIGNED: D. GUEST
ENGINEER / ARCHITECT
B. DENG

TERMINAL ISLAND GRADE SEPARATION

ABUTMENT DETAILS NO. 3

THE PORT OF LOS ANGELES
ENGINEERING DIVISION
425 S. PALOS VERDES STREET SAN PEDRO CA 90731-3309

DRAWING NUMBER: 1-3497
SHEET NUMBER: S-11

POLAPRO1_04/2021_BWD

C:\Users\ZucchiP\DOCACCDocs\Jacobs\US CA_d3391901_POLA Terminal Island GSI\Project Files\30 PROJECT DATA\PID\STRUCTURE\Drawings\1-3497 S-11.dwg, 8/11/2025 6:17:09 AM

LEGEND:

⊂ BUNDLED BARS

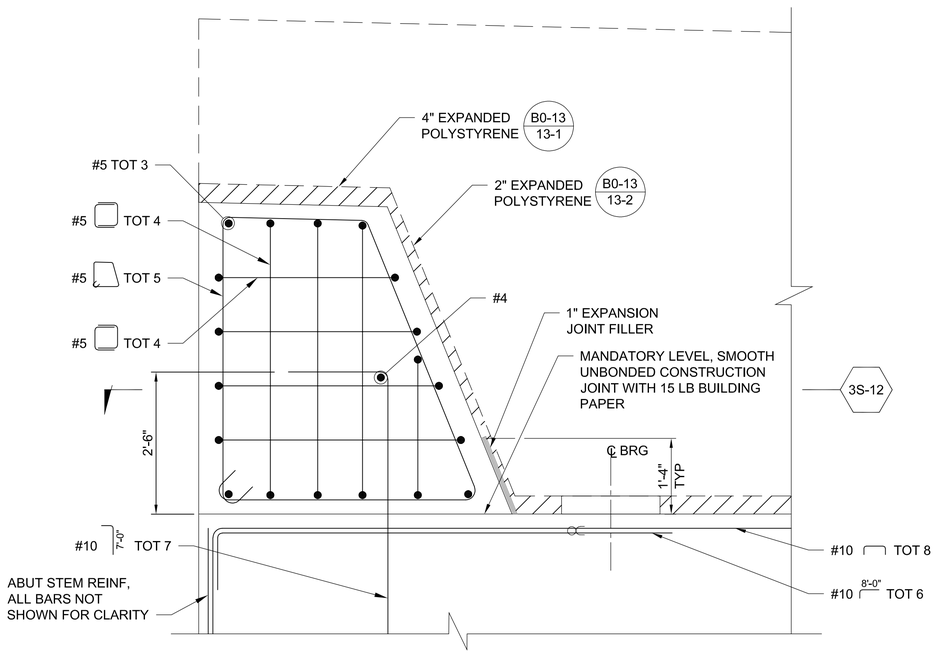

1S-12 / 2S-06 SHEAR KEY DETAIL
SCALE: 3/4" = 1'-0'

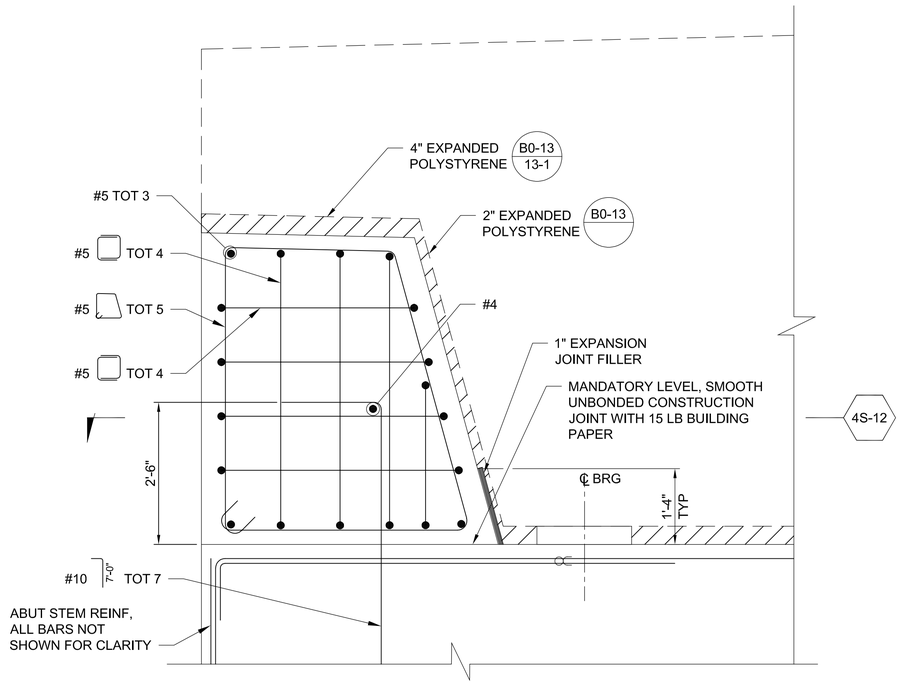

2S-12 / 2S-07 SHEAR KEY DETAIL
SCALE: 3/4" = 1'-0'

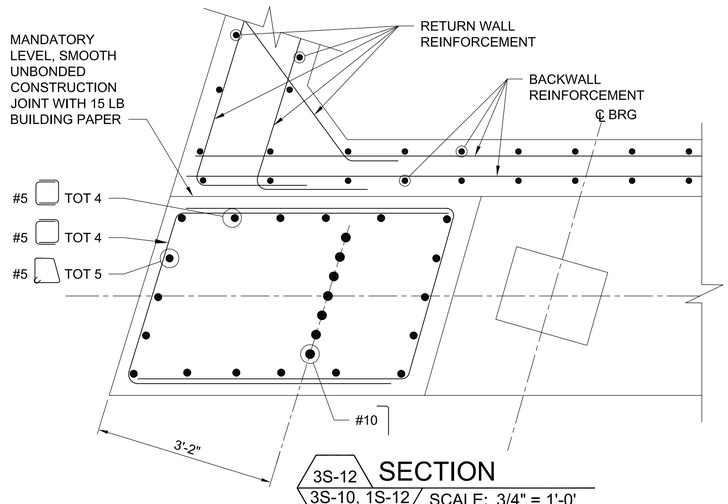

3S-12 / 3S-10, 1S-12 SECTION
SCALE: 3/4" = 1'-0'

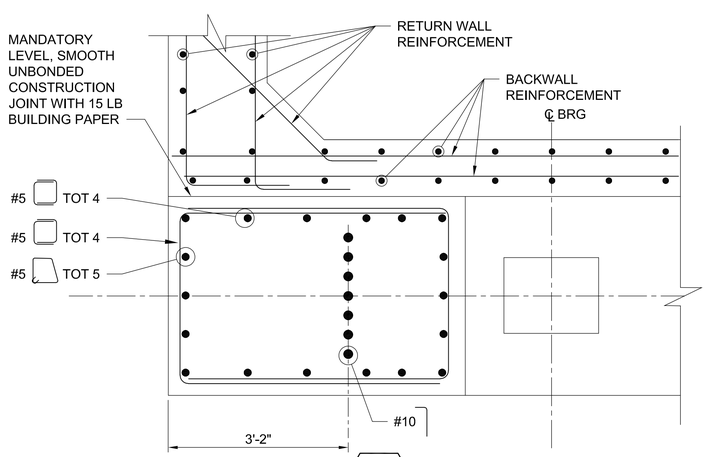

4S-12 / 2S-12 SECTION
SCALE: 3/4" = 1'-0'

NOTE: THE CONTRACTOR SHALL VERIFY ALL CONTROLLING FIELD DIMENSIONS BEFORE ORDERING OR FABRICATING ANY MATERIAL

SHEET ____ OF 400

NO.	DATE	DRAWN	REVISIONS -	CHK'D	APP'D
			NOT FOR CONSTRUCTION		

NO.	DATE	DRAWN	REVISIONS -	CHK'D	APP'D
			80% DESIGN		

Jacobs
300 E. ESPLANADE DRIVE, SUITE 500
OXNARD, CA 93036
T: (949) 224-7500
F: (949) 224-7501

SCALE: AS SHOWN
DRAWN: S. LEONG
CHECKED: B. DENG
DESIGNED: D. GUEST
ENGINEER / ARCHITECT
B. DENG

TERMINAL ISLAND GRADE SEPARATION

ABUTMENT DETAILS NO. 4

THE PORT OF LOS ANGELES
ENGINEERING DIVISION
425 S. PALOS VERDES STREET SAN PEDRO CA 90731-3309

DRAWING NUMBER: 1-3497
SHEET NUMBER: S-12

POLAPROT_040320_BWD

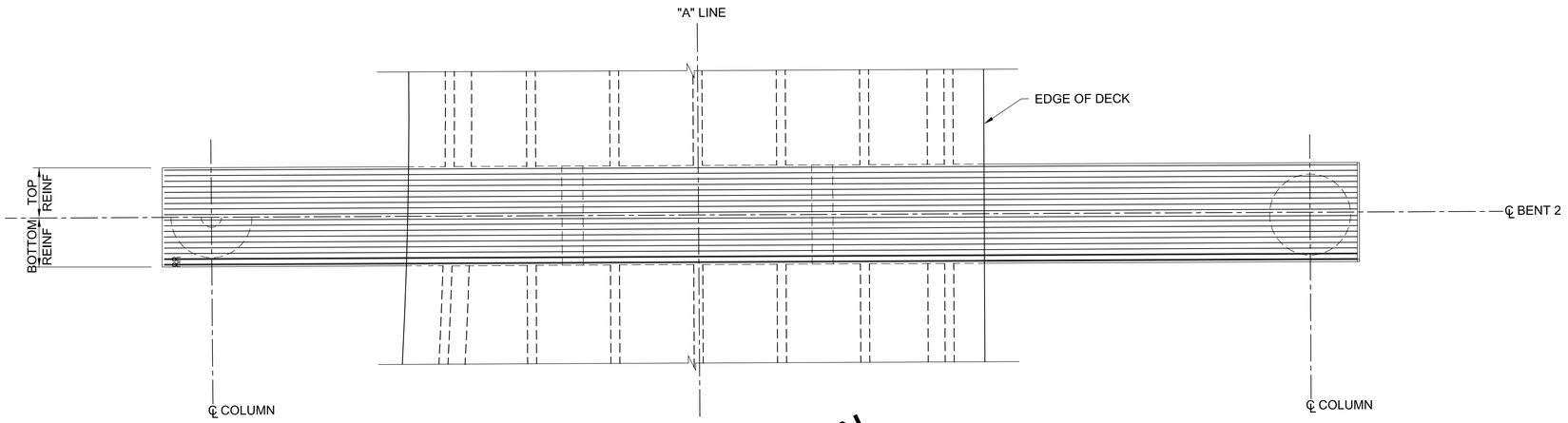

1S-13 / S-13 PLAN
SCALE: 1/8" = 1'-0"

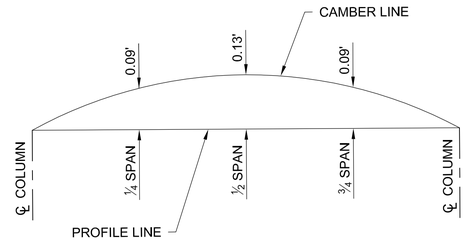

2S-13 / S-13 OUTRIGGER CAMBER DIAGRAM
SCALE: NTS

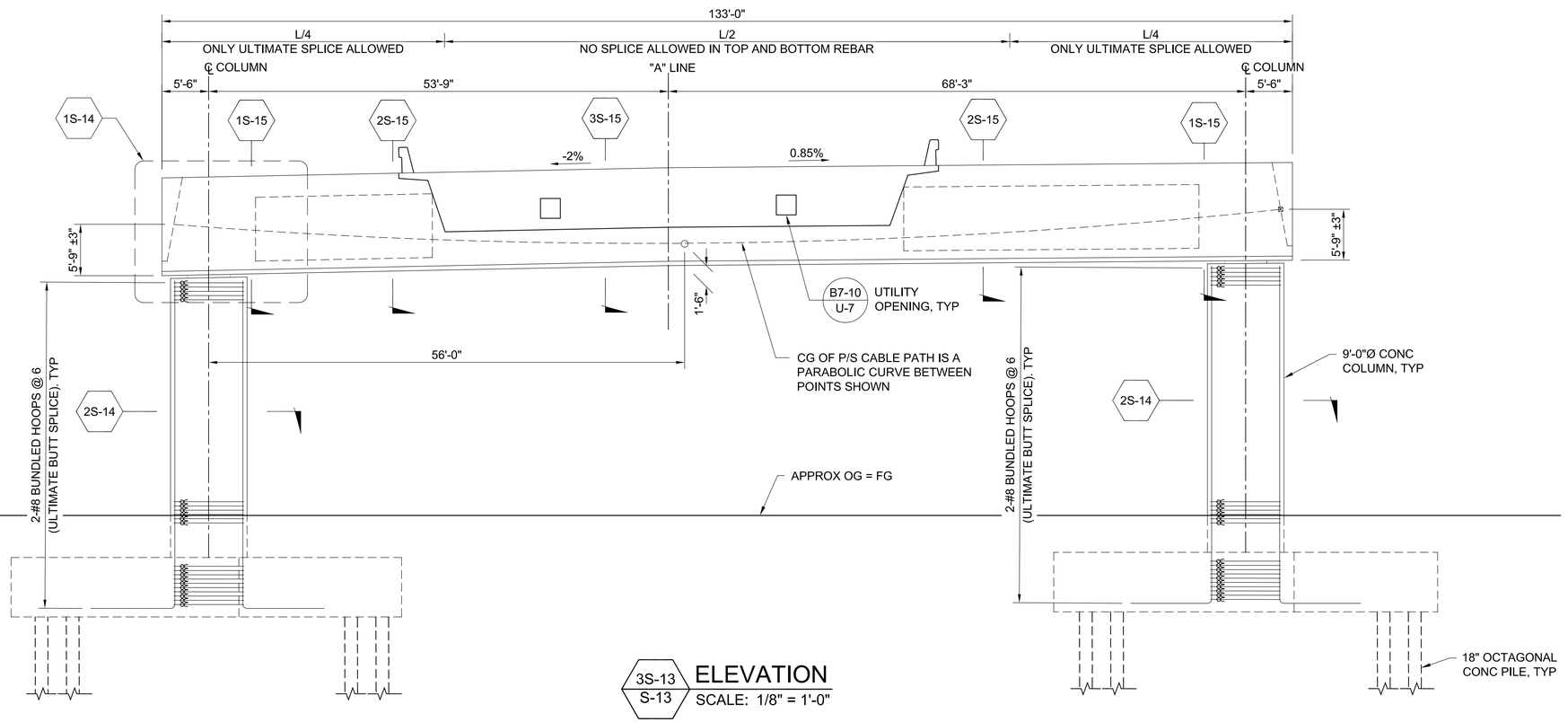

3S-13 / S-13 ELEVATION
SCALE: 1/8" = 1'-0"

PRESTRESSING NOTES

270 KSI LOW RELAXATION STRAND:

P_{jack} = 30,000 KIPS
ANCHOR SET = 3/8 INCH

DISTRIBUTION OF FINAL PRESTRESSING FORCE (P_{jack}) SHALL BE SYMMETRICAL ABOUT ℄ BENT 2

CONCRETE: f'c = 6,000 PSI @ 28 DAYS
f'c = 5,000 PSI @ TIME OF STRESSING

CONTRACTOR SHALL SUBMIT ELONGATION CALCULATIONS BASED ON INITIAL STRESS AT ☒ = 0.937 TIMES JACKING STRESS

ONE END STRESSING SHALL BE PERFORMED FROM WEST END

DESIGN IS BASED ON FRICTION CURVATURE COEFFICIENT (μ = 0.15) AND FRICTION WOBBLE COEFFICIENT K=0.0002/FT3

PRESTRESSING SEQUENCE

STRESSING SHALL NOT TAKE PLACE UNTIL THE DECK HAS BEEN PLACED AND REACHED REQUIRED STRENGTH

P_{jack} TO BE APPLIED IN STAGES

STAGE 1: STRESS OUTRIGGER CAP TO 50% OF P_{jack} = 15,000 KIPS

STAGE 2: STRESS GIRDERS TO 50% OF P_{jack} = 8,950 KIPS

STAGE 3: STRESS OUTRIGGER CAP TO 100% OF P_{jack} = 30,000 KIPS

STAGE 4: STRESS GIRDERS TO 100% OF P_{jack} = 17,900 KIPS

AT NO TIME DURING STRESSING OPERATIONS SHALL MORE THAN 1/8 OF THE TOTAL OUTRIGGER PRESTRESSING FORCE BE APPLIED ECCENTRICALLY ABOUT THE CENTERLINE OF THE BENT

NO REMOVAL OF FALSEWORK IS ALLOWED UNTIL ALL STRESSING AND GROUTING IF COMPLETE

FOR GIRDER PRESTRESSING, SEE S-21

LEGEND:

∝ BUNDLED BARS

NOTE: THE CONTRACTOR SHALL VERIFY ALL CONTROLLING FIELD DIMENSIONS BEFORE ORDERING OR FABRICATING ANY MATERIAL

SHEET ____ OF 400

NO.	DATE	DRAWN	REVISIONS -	CHK'D	APP'D	NO.	DATE	DRAWN	REVISIONS -	CHK'D	APP'D
			NOT FOR CONSTRUCTION						80% DESIGN		

Jacobs
2600 MICHELSON DRIVE, SUITE 500
IRVINE, CA 92612
T: (949) 224-7500
F: (949) 224-7501

SCALE: AS SHOWN
DRAWN: S. LEONG
CHECKED: B. DENG
DESIGNED: D. GUEST
ENGINEER / ARCHITECT
B. DENG

TERMINAL ISLAND GRADE SEPARATION

BENT 2 LAYOUT

THE PORT OF LOS ANGELES
ENGINEERING DIVISION
425 S. PALOS VERDES STREET SAN PEDRO CA 90731-3309

DRAWING NUMBER 1-3497
SHEET NUMBER S-13

POLAPRO1_04/2021_BWD

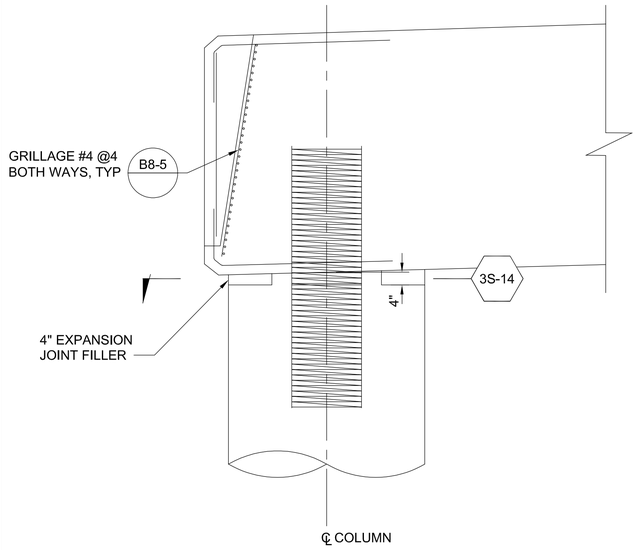

1S-14 / 3S-13 END ANCHORAGE DETAIL
SCALE: NTS

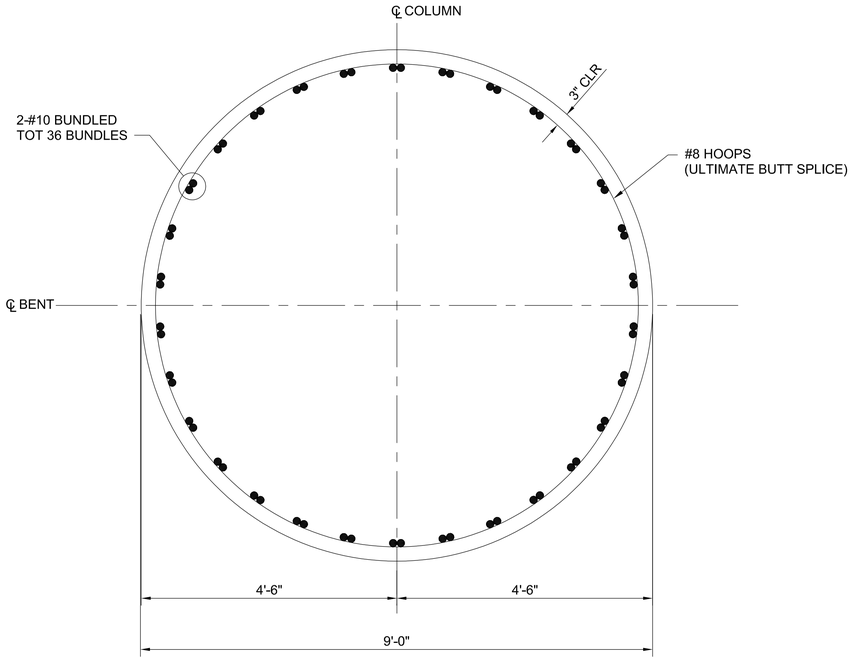

2S-14 / 3S-13 SECTION
SCALE: 3/4"=1'-0"

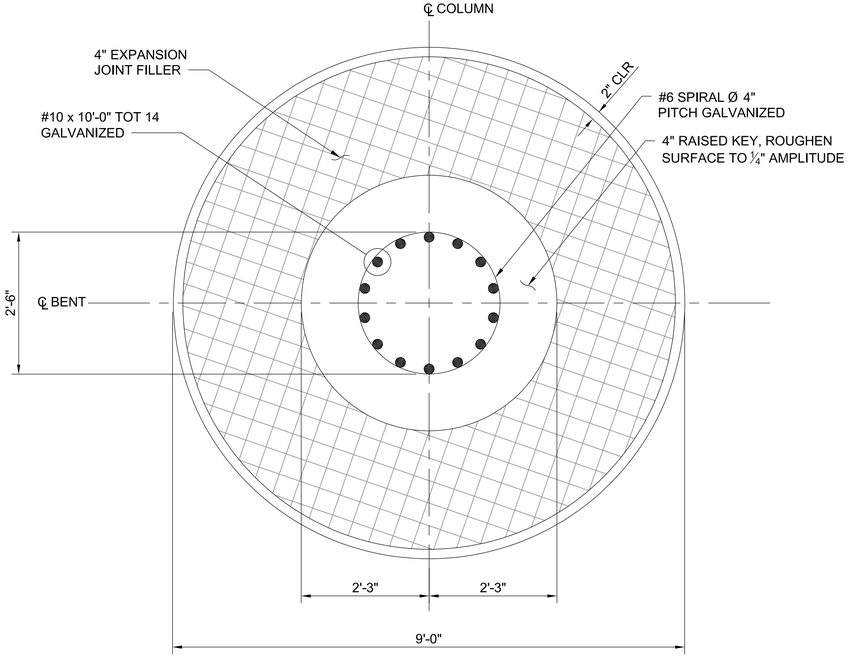

3S-14 / 1S-14 SECTION
SCALE: 3/4"=1'-0"

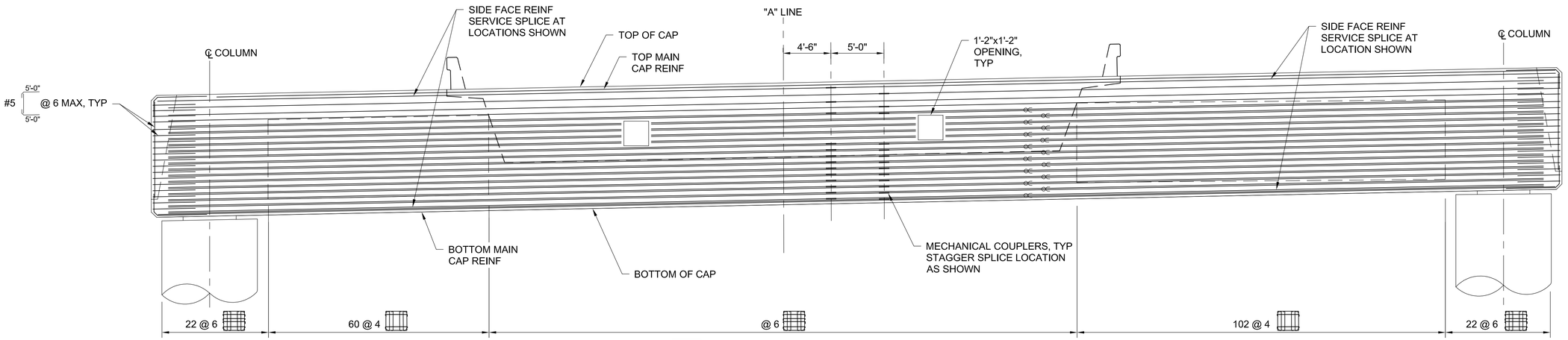

LEGEND:
⊂⊂ BUNDLED BARS

4S-14 / S-14 SIDE FACE REINFORCEMENT LAYOUT
SCALE: 3/16"=1'-0"

NOTE: THE CONTRACTOR SHALL VERIFY ALL CONTROLLING FIELD DIMENSIONS BEFORE ORDERING OR FABRICATING ANY MATERIAL

SHEET ____ OF 400

NO.	DATE	DRAWN	REVISIONS -	CHK'D	APP'D
			NOT FOR CONSTRUCTION		

NO.	DATE	DRAWN	REVISIONS -	CHK'D	APP'D
			80% DESIGN		

Jacobs
3600 MICHELSON DRIVE, SUITE 500
IRVINE, CA 92612
T: (949) 224-7500
F: (949) 224-7501

SCALE: AS SHOWN
DRAWN: S. LEONG
CHECKED: B. DENG
DESIGNED: D. GUEST
ENGINEER / ARCHITECT
B. DENG

TERMINAL ISLAND GRADE SEPARATION

BENT DETAILS NO. 1

THE PORT OF LOS ANGELES
ENGINEERING DIVISION
425 S. PALOS VERDES STREET SAN PEDRO CA 90731-3309

DRAWING NUMBER 1-3497
SHEET NUMBER S-14

POLAPROT_040320_BWD

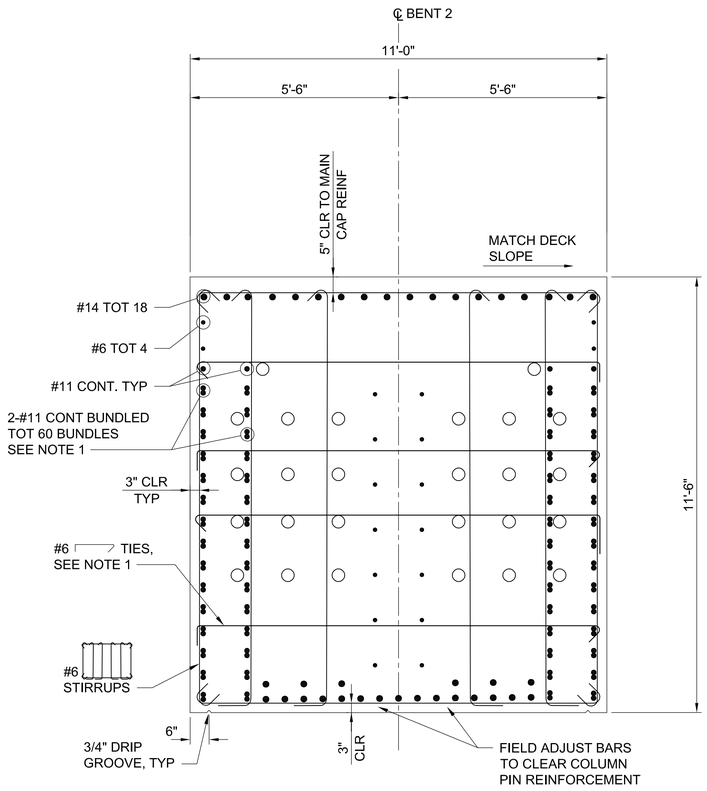

1S-15 / 3S-13 SECTION
SCALE: 1/2" = 1'-0"

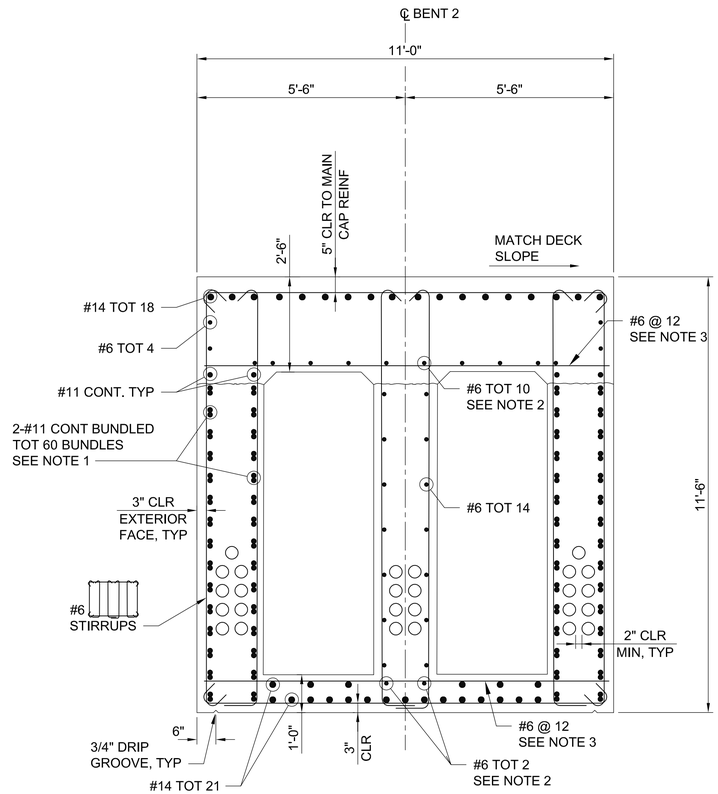

2S-15 / 3S-13 SECTION
SCALE: 1/2" = 1'-0"

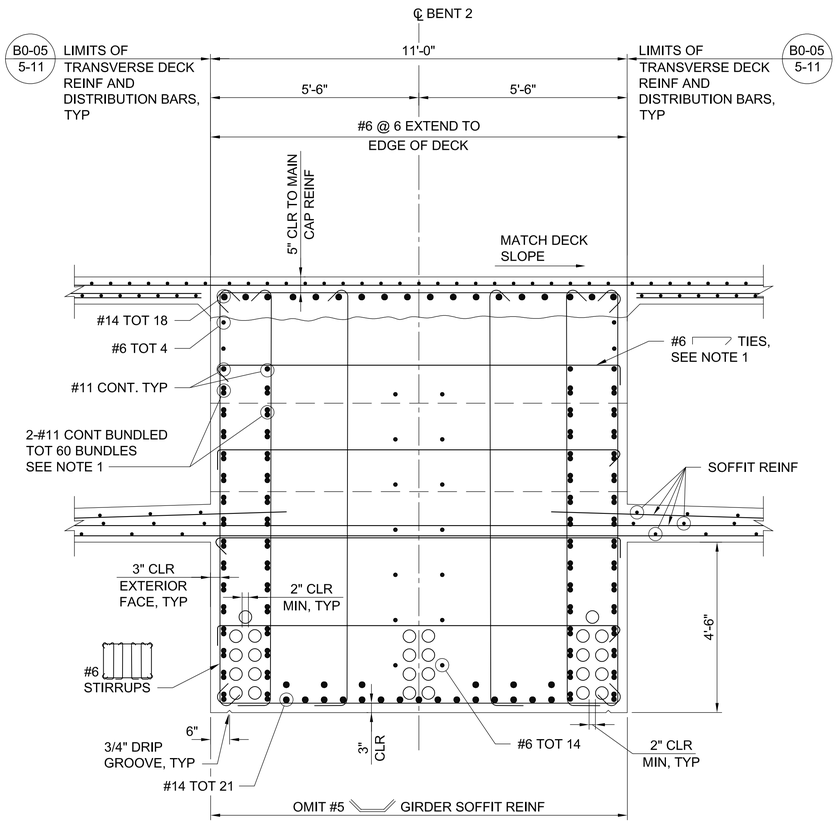

3S-15 / 3S-13 SECTION
SCALE: 1/2" = 1'-0"

NOTES

1. ADJUST BENT CAP REINFORCEMENT TO CLEAR LONGITUDINAL GIRDER P/S DUCTS AS NECESSARY.
2. BENT CAP SIDE FACE BARS MAY BE DISCONTINUOUS BETWEEN OPENINGS. SEE SHEET S-14 FOR DETAILS.
3. EXTEND #6 BARS 2'-0" INTO SOLID BENT CAP SECTIONS STOP #6 BAR 3" FROM SOLID SECTIONS.

NOTE: THE CONTRACTOR SHALL VERIFY ALL CONTROLLING FIELD DIMENSIONS BEFORE ORDERING OR FABRICATING ANY MATERIAL

SHEET ____ OF 400

NO.	DATE	DRAWN	REVISIONS -	CHK'D	APP'D
			NOT FOR CONSTRUCTION		

NO.	DATE	DRAWN	REVISIONS -	CHK'D	APP'D
			80% DESIGN		

Jacobs
2600 MICHELSON DRIVE, SUITE 500
IRVINE, CA 92612
T: (949) 224-7500
F: (949) 224-7501

SCALE: AS SHOWN
DRAWN: S. LEONG
CHECKED: B. DENG
DESIGNED: D. GUEST
ENGINEER / ARCHITECT
B. DENG

TERMINAL ISLAND GRADE SEPARATION

BENT DETAILS NO. 2

THE PORT OF LOS ANGELES
ENGINEERING DIVISION
425 S. PALOS VERDES STREET SAN PEDRO CA 90731-3309

DRAWING NUMBER: 1-3497
SHEET NUMBER: S-15

POLAPROT_04/2021_BWD

LEGEND:

XX WIDTH OF GIRDER STEM IN INCHES

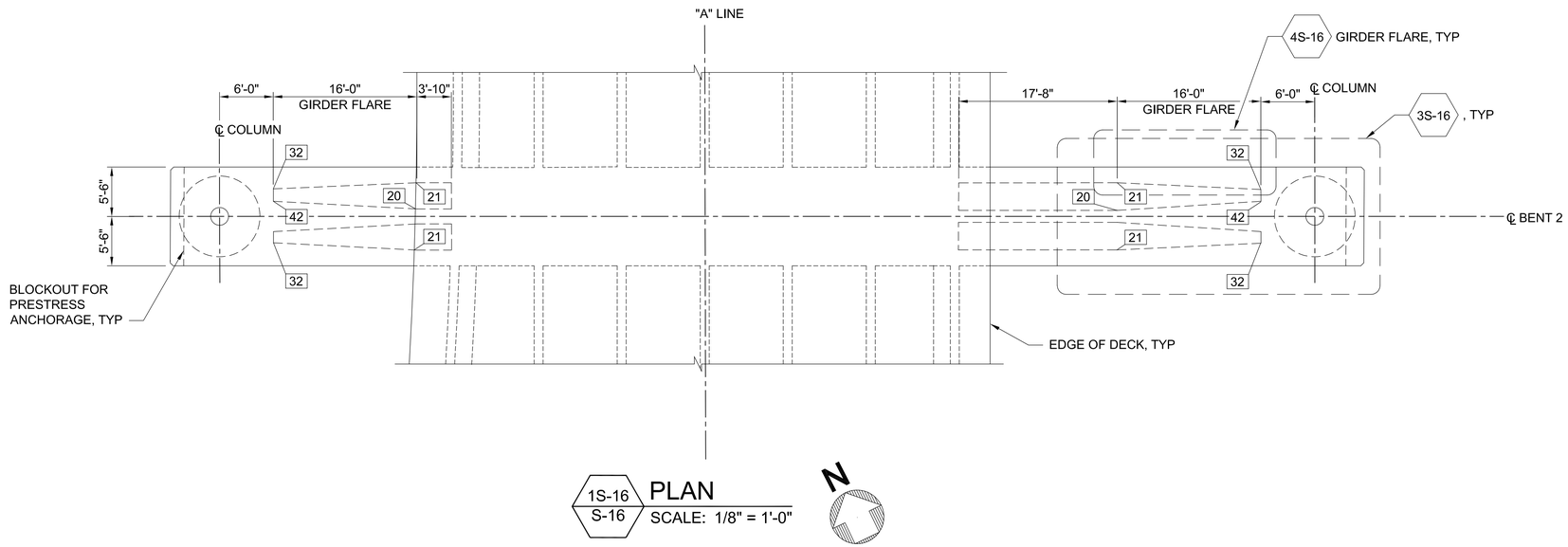

1S-16 / S-16 PLAN
SCALE: 1/8" = 1'-0"

N

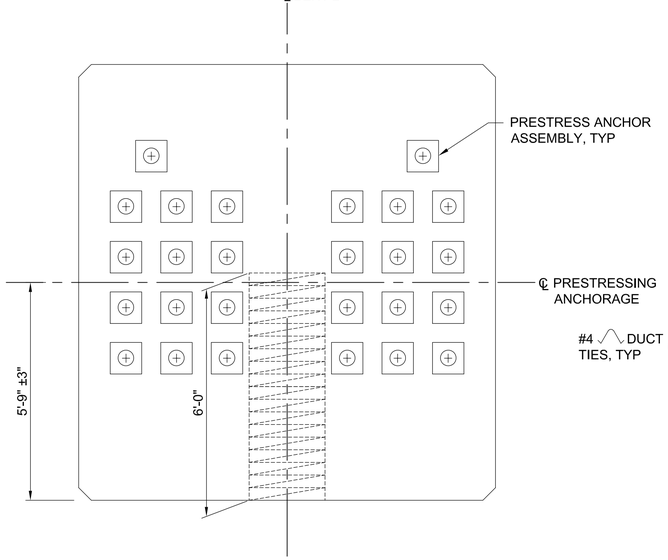

2S-16 / S-16 POST-TENSION ANCHORAGE LAYOUT
SCALE: 1/2" = 1'-0"

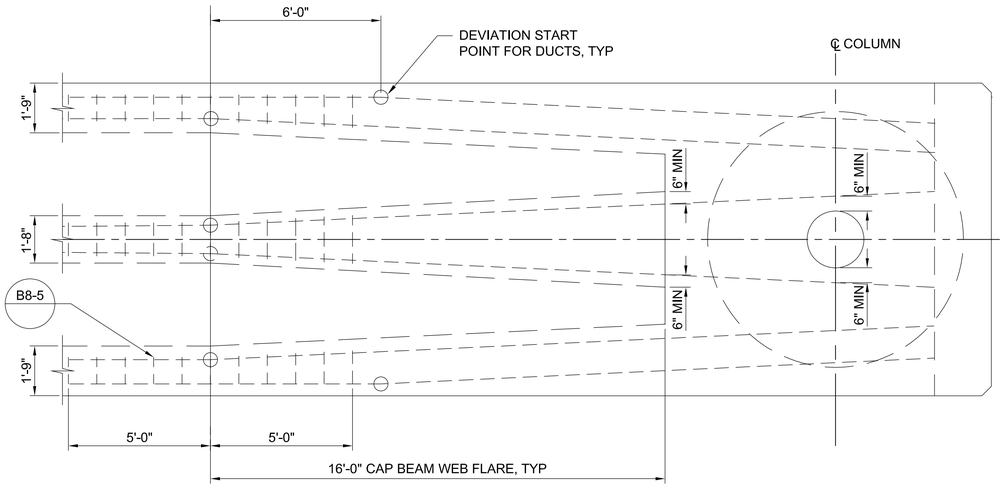

3S-16 / 1S-16 POST-TENSION DUCT LAYOUT
SCALE: 3/8" = 1'-0"

EAST SIDE SHOWN, WEST SIDE SIMILAR

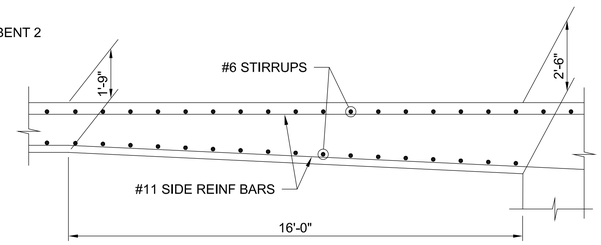

4S-16 / 1S-16 GIRDER FLARE DETAIL
SCALE: 3/8" = 1'-0"

NOTE: THE CONTRACTOR SHALL VERIFY ALL CONTROLLING FIELD DIMENSIONS BEFORE ORDERING OR FABRICATING ANY MATERIAL

SHEET ____ OF 400

NO.	DATE	DRAWN	REVISIONS -	CHK'D	APP'D
			NOT FOR CONSTRUCTION		

NO.	DATE	DRAWN	REVISIONS -	CHK'D	APP'D
			80% DESIGN		

Jacobs
2600 MICHELSON DRIVE, SUITE 500
IRVINE, CA 92612
T: (949) 224-7500
F: (949) 224-7501

SCALE: AS SHOWN
DRAWN: S. LEONG
CHECKED: B. DENG
DESIGNED: D. GUEST
ENGINEER / ARCHITECT
B. DENG

TERMINAL ISLAND GRADE SEPARATION

BENT DETAILS NO. 3

THE PORT OF LOS ANGELES
ENGINEERING DIVISION
425 S. PALOS VERDES STREET SAN PEDRO CA 90731-3309

DRAWING NUMBER 1-3497
SHEET NUMBER S-16

C:\Users\ZucchiP\DC\ACCDocs\Jacobs\US CA_d3391901_POLA Terminal Island GS\Project Files\30 PROJECT DATA\PID\STRUCTURE\Drawings\1-3497 S-16.dwg, 8/11/2025 7:36:45 AM
POLAPRO1_04/2023_BWD

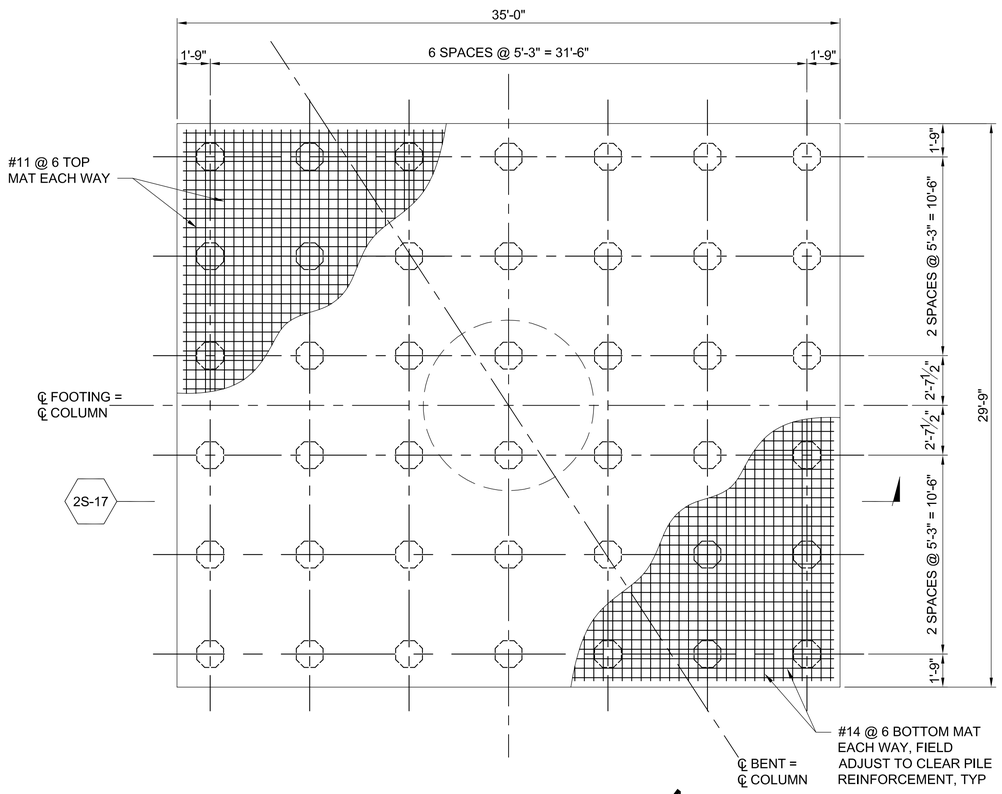

1S-17 / 1S-05 **PILE LAYOUT**
SCALE: 1/4" = 1'-0"

LEFT FOOTING SHOWN, RIGHT FOOTING SIMILAR

NOTE

1. ADJUST COLUMN TRANSVERSE REINFORCE SPACING TO CLEAR FOOTING MAIN REINFROCEMENT AS NECESSARY.

LEGEND

18" OCTAGONAL PRECAST PRESTRESSED CONCRETE PILE

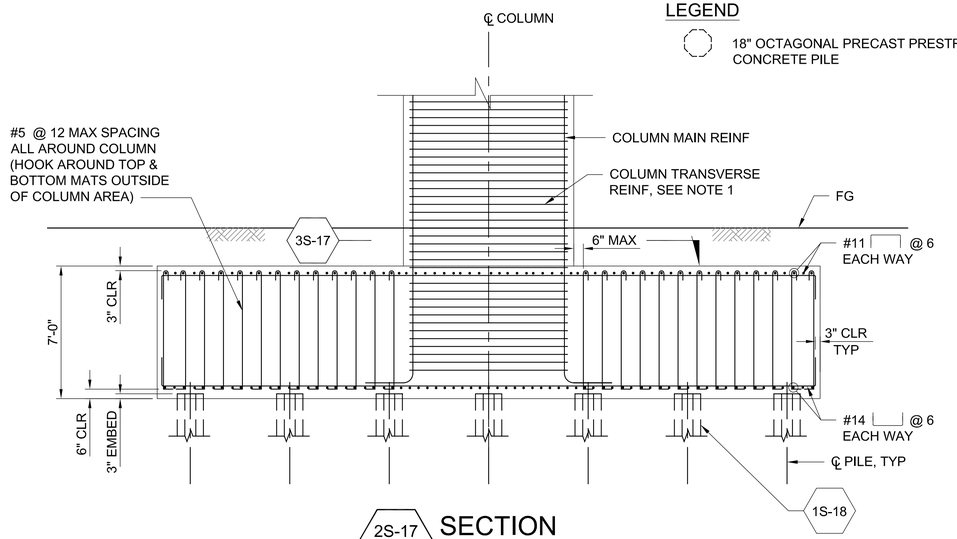

2S-17 / 1S-17 **SECTION**
SCALE: 1/4" = 1'-0"

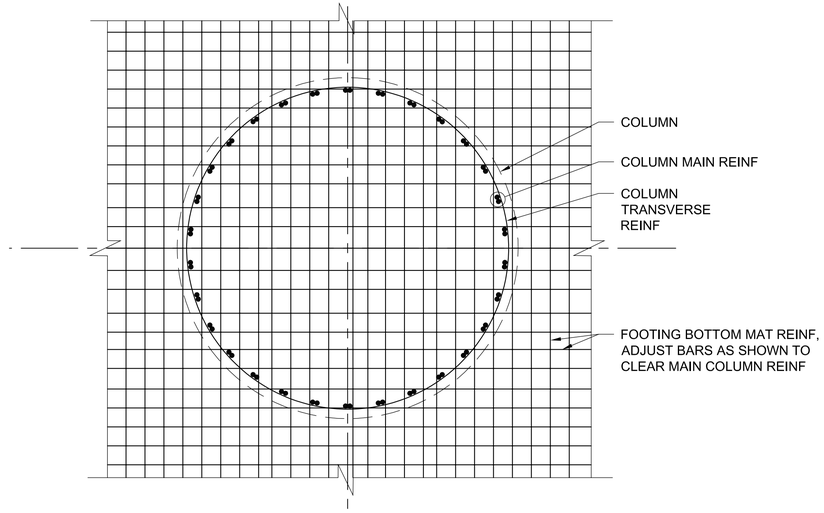

3S-17 / 2S-17 **FOOTING TOP REINF MAT AT COLUMN**
SCALE: 1/2" = 1'-0"

NOTE: THE CONTRACTOR SHALL VERIFY ALL CONTROLLING FIELD DIMENSIONS BEFORE ORDERING OR FABRICATING ANY MATERIAL

SHEET ____ OF 400

NO.	DATE	DRAWN	REVISIONS -	CHK'D	APP'D
			NOT FOR CONSTRUCTION		

NO.	DATE	DRAWN	REVISIONS -	CHK'D	APP'D
			80% DESIGN		

Jacobs
2600 MICHELSON DRIVE, SUITE 500
IRVINE, CA 92612
T: (949) 224-7500
F: (949) 224-7501

SCALE:	AS SHOWN
DRAWN:	S. LEONG
CHECKED:	B. DENG
DESIGNED:	D. GUEST
ENGINEER / ARCHITECT	B. DENG

TERMINAL ISLAND GRADE SEPARATION

BENT DETAILS NO. 4

THE PORT OF LOS ANGELES
ENGINEERING DIVISION
425 S. PALOS VERDES STREET SAN PEDRO CA 90731-3309

DRAWING NUMBER	SHEET NUMBER
1-3497	S-17

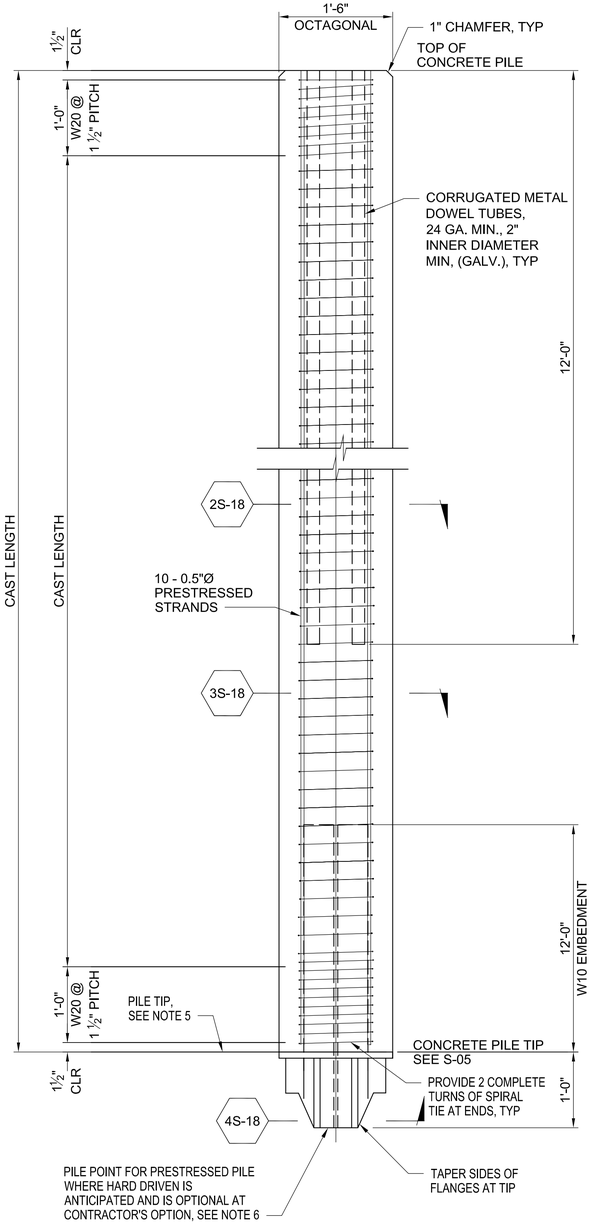

1S-18 / 1S-09, 2S-09, 2S-17 **PRECAST PRESTRESSED CONCRETE PILE DETAILS**
SCALE: 1" = 1'-0"

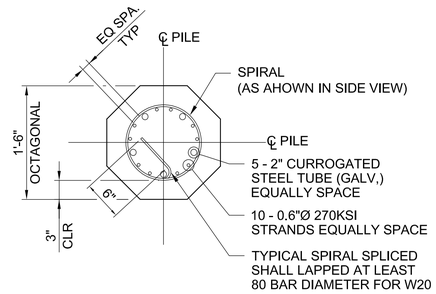

2S-18 / 1S-18 **SECTION**
SCALE: 1" = 1'-0"

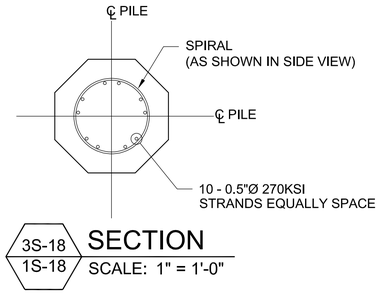

3S-18 / 1S-18 **SECTION**
SCALE: 1" = 1'-0"

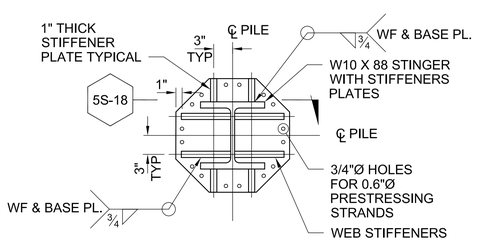

4S-18 / 1S-18 **SECTION**
SCALE: 1" = 1'-0"

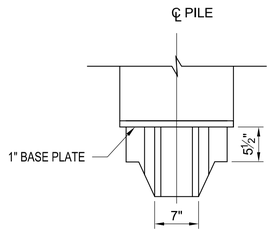

5S-18 / 1S-18 **SECTION**
SCALE: 1" = 1'-0"

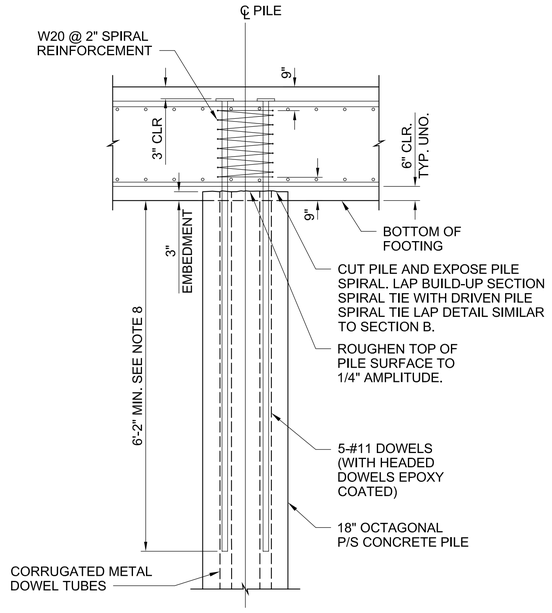

6S-18 / 1S-18 **PILE DOWEL DETAIL**
SCALE: 3/4" = 1'-0"

NOTE

1. CONCRETE STRENGTH AT 28 DAYS, f'c = 6,500 PSI, UNO
   CONCRETE STRENGTH AT TRANSFER, f'c = 4,500 PSI
2. JACKING FORCE STRAND SHALL BE 70% ULTIMATE = 41 KIPS
   ASSUMED LOSSES 35,000 PSI = 7.6 KIPS
   WORKING FORCE PER STRAND = 33.4 KIPS
   EFFECTIVE PRESTRESS = 1195 PSI
3. DESIGN PILE TIP ELEVATIONS, SEE S-05.
4. PRESTRESSED CONCRETE PILE SHALL BE DRIVEN TO PILE TIP ELEVATION OR REFUSAL PER SPECIFICATIONS SECTION 31 62 13.23 PRESTRESSED CONCRETE PILES.
5. JETTING FOR PILE INSTALLATION WILL NOT BE ALLOWED.
6. PILE POINTS FOR PRESTRESSED PILES WHERE HARD DRIVEN IS ANTICIPATED AND IS OPTIONAL AT CONTRACTOR OPTION, PILE POINT SHALL BE MANUFACTURED PER CONTRACT REQUIREMENTS BASED ON THE DETAILS PROVIDED.
7. IF PILE IS DRIVEN LESS THAN 6" BELOW CUT-OFF ELEVATION, REMOVE UPPER PART OF PILE UNTIL TOP OF PILE IS 6" BELOW CUT-OFF ELEVATION FOR PILE BUILD-UP.
8. IF NO CORRUGATED METAL TUBING REMAINS AFTER CUT-OFF, DRILL 2" DIAMETER HOLES AND GROUT DOWELS USING NON-SHRINK GROUT. IF APORTION OF THE CORRUGATED METAL TUBING REMAINS AFTER CUT-OFF, DRILL 10" DIAMETER HOLES. FOR GROUTING DOWELS, DOWEL TUBES SHALL BE FILLED WITHIN 2 FT FROM TOP WITH GROUT MATERIAL. PLACE DOWELS IMMEDIATELY AFTER GROUTING. MINIMUM DOWEL EMBEDMENT LENGTH IS MEASURED FROM TOP OF CUT OFF.
9. PILE POINTS SHALL CONFORM TO ASTM A572.

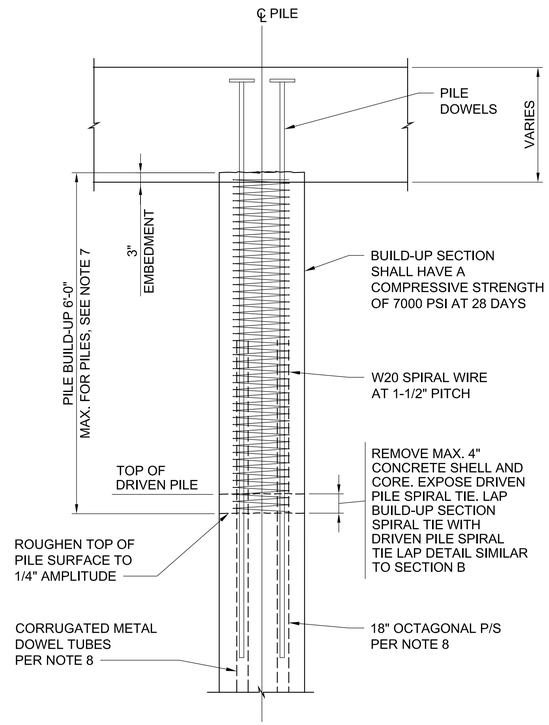

7S-18 / 1S-18 **PILE BUILD-UP DETAIL**
SCALE: 3/4" = 1'-0"

NOTE: THE CONTRACTOR SHALL VERIFY ALL CONTROLLING FIELD DIMENSIONS BEFORE ORDERING OR FABRICATING ANY MATERIAL

SHEET ____ OF 400

NO.	DATE	DRAWN	REVISIONS -	CHK'D	APP'D
			NOT FOR CONSTRUCTION		

NO.	DATE	DRAWN	REVISIONS -	CHK'D	APP'D
			80% DESIGN		

Jacobs
2600 MICHELSON DRIVE, SUITE 500
IRVINE, CA 92612
T: (949) 224-7500
F: (949) 224-7501

SCALE:	AS SHOWN
DRAWN:	N. MORALES
CHECKED:	B. DENG
DESIGNED:	D. GUEST
ENGINEER / ARCHITECT	
	B. DENG

TERMINAL ISLAND GRADE SEPARATION

PILE DETAILS

THE PORT OF LOS ANGELES
ENGINEERING DIVISION
425 S. PALOS VERDES STREET SAN PEDRO CA 90731-3309

DRAWING NUMBER	SHEET NUMBER
1-3497	S-18

POLAPR01_042023_BWD

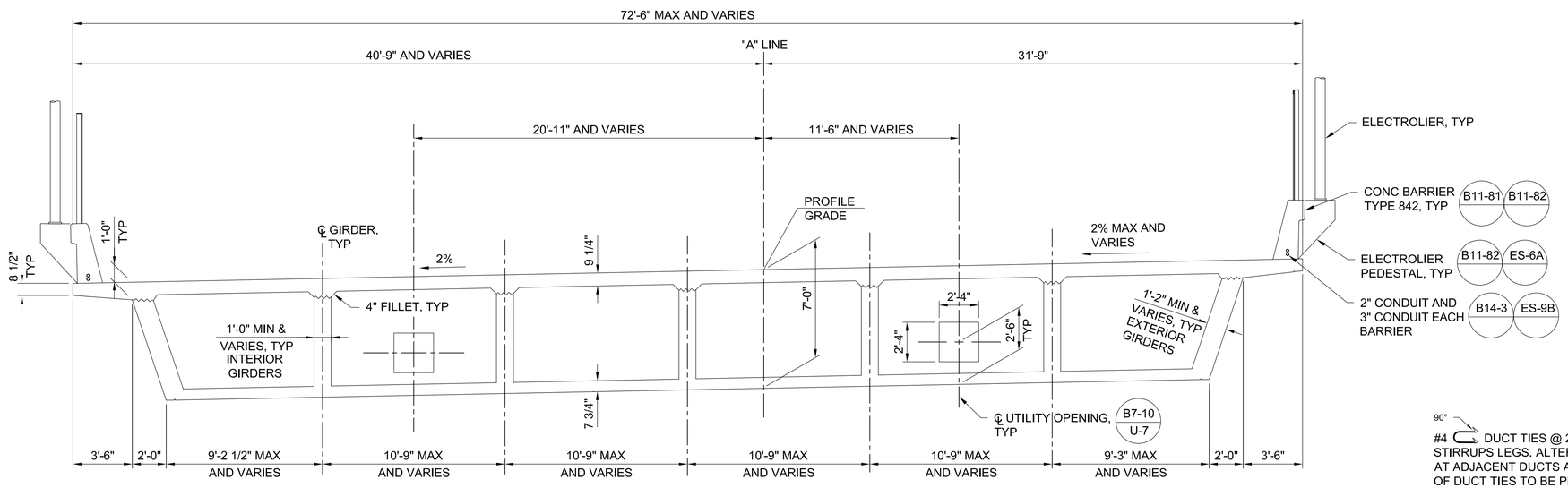

1S-19 / S-19 **TYPICAL SECTION SPAN 1**
SCALE: 1/4" = 1'-0"

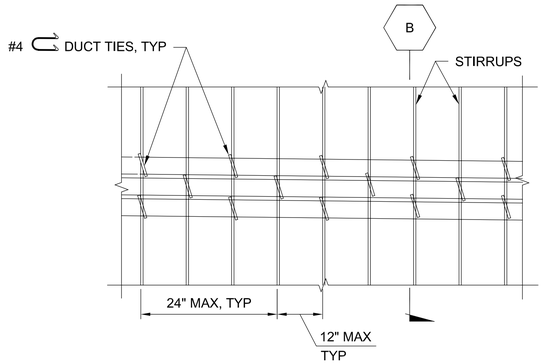

NOTE: HORIZONTAL GIRDER REINFORCEMENT NOT SHOWN.

A / 3S-19 **ELEVATION**

90°
#4 DUCT TIES @ 24" MAX HOOK AROUNDBOTH STIRRUPS LEGS. ALTERNATE DUCT TILE PLACEMENT AT ADJACENT DUCTS AT 12" MAX CLOSED LOOP END OF DUCT TIES TO BE PLACEDON THE INSIDE OFCURVE

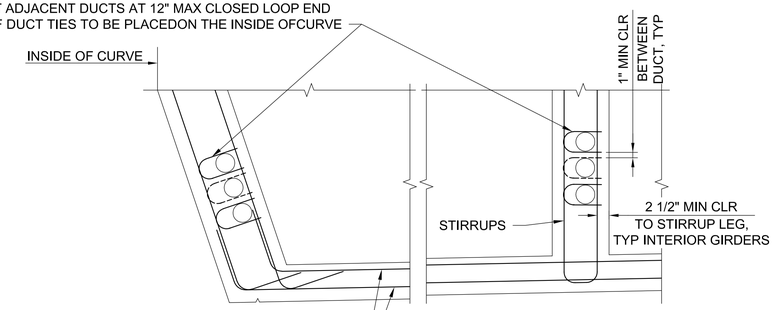

B / 3S-19 **PART SECTION**

3S-19 / S-19 **PRESTRESSING DUCT DETAILS (SPAN 1)**
SCALE: NTS

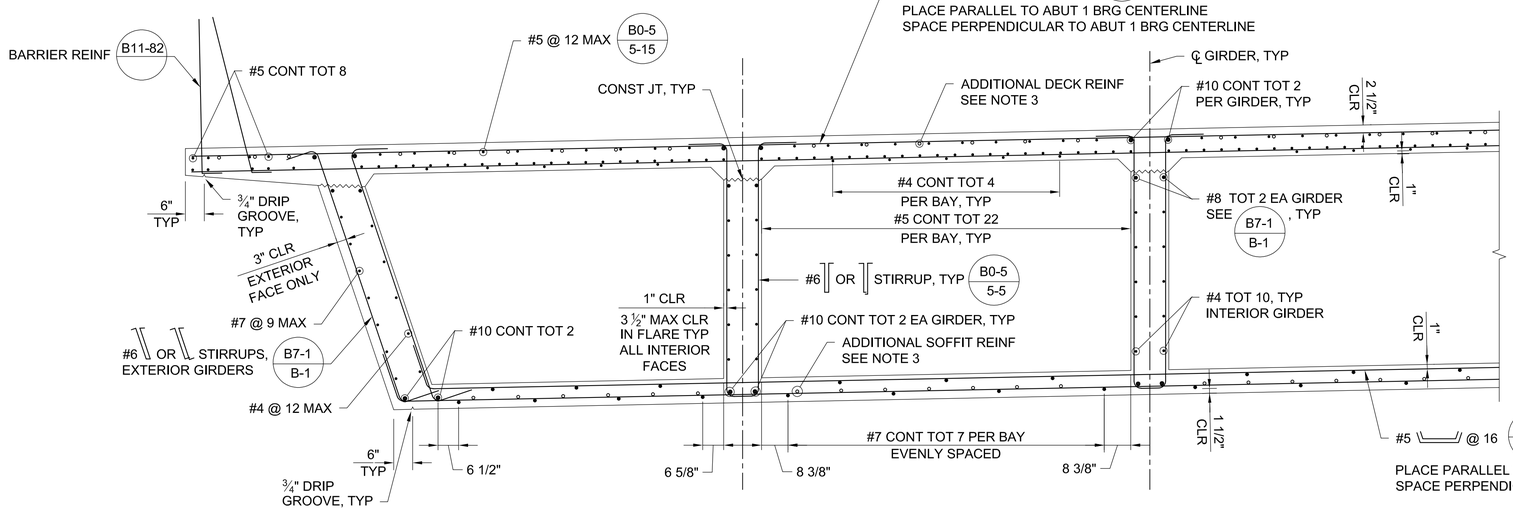

2S-19 / S-19 **PARTIAL TYPICAL SECTION SPAN 1** B0-5 B7-1 B8-5
SCALE: 1/2" = 1'-0"

NOTES

1. DIMENSIONS ARE MEASURED NORMAL TO "A" LINE UNLESS NOTED OTHERWISE.
2. FOR ELECTRICAL CONDUITS, SEE EL SHEETS.
3. FOR ADDITIONAL DECK AND SOFFIT LONGITUDINAL REINFORCEMENT, SEE "GIRDER REINFORCEMENT' SHEET.
4. ALL CONTINUOUS BARS SHALL BE SERVICE SPLICED.

LEGEND

- ADDITIONAL LONGITUDINAL REINFORCEMENT

NOTE: THE CONTRACTOR SHALL VERIFY ALL CONTROLLING FIELD DIMENSIONS BEFORE ORDERING OR FABRICATING ANY MATERIAL

SHEET ____ OF 400

NO.	DATE	DRAWN	REVISIONS -	CHK'D	APP'D
			NOT FOR CONSTRUCTION		

NO.	DATE	DRAWN	REVISIONS -	CHK'D	APP'D
			80% DESIGN		

Jacobs
2600 MICHELSON DRIVE, SUITE 500
IRVINE, CA 92612
T: (949) 224-7500
F: (949) 224-7501

SCALE:	AS SHOWN
DRAWN:	S. LEONG
CHECKED:	B. DENG
DESIGNED:	D. GUEST
ENGINEER / ARCHITECT	B. DENG

TERMINAL ISLAND GRADE SEPARATION

TYPICAL SECTION NO. 1

THE PORT OF LOS ANGELES
ENGINEERING DIVISION
425 S. PALOS VERDES STREET SAN PEDRO CA 90731-3309

DRAWING NUMBER	SHEET NUMBER
1-3497	S-19

POLAPRO1_042023_BWD

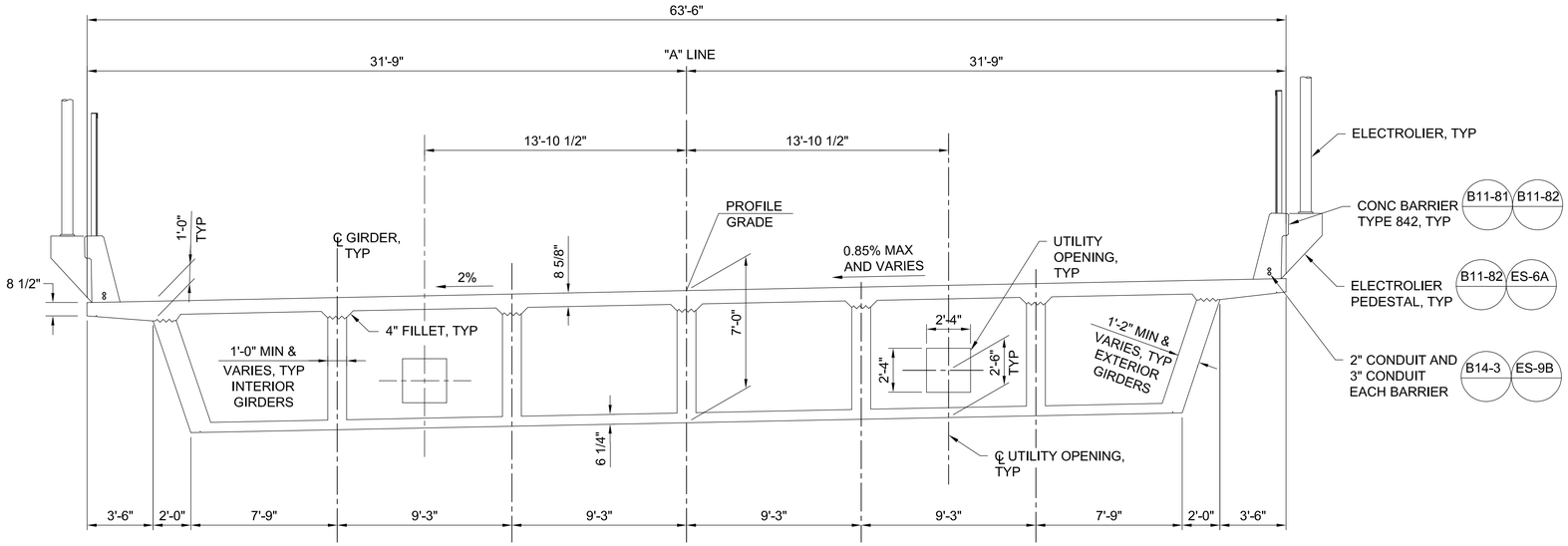

1S-20 / S-20 **TYPICAL SECTION SPAN 2**

SCALE: 1/4" = 1'-0"

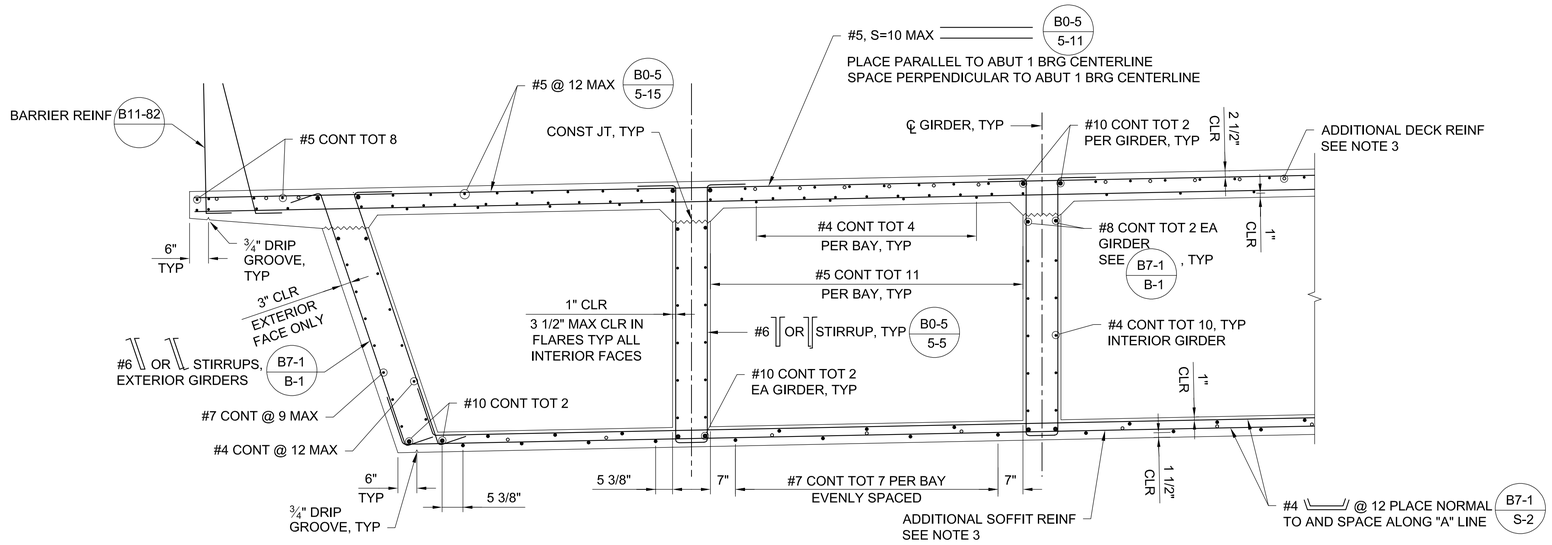

2S-20 / S-20 **PARTIAL TYPICAL SECTION SPAN 2** B0-5 B7-1 B8-5

SCALE: 1/2" = 1'-0"

NOTES

1. DIMENSIONS ARE MEASURED NORMAL TO "A" LINE UNLESS NOTED OTHERWISE.
2. FOR ELECTRICAL CONDUITS, SEE EL SHEETS.
3. FOR ADDITIONAL DECK AND SOFFIT LONGITUDINAL REINFORCEMENT, SEE "GIRDER REINFORCEMENT" SHEET.
4. ALL CONTINUOUS BARS SHALL BE SERVICE SPLICED.

LEGEND

◦ DENOTES ADDITIONAL LONGITUDINAL REINFORCEMENT

NOTE: THE CONTRACTOR SHALL VERIFY ALL CONTROLLING FIELD DIMENSIONS BEFORE ORDERING OR FABRICATING ANY MATERIAL

SHEET ____ OF 400

NO.	DATE	DRAWN	REVISIONS -	CHK'D	APP'D
			NOT FOR CONSTRUCTION		

NO.	DATE	DRAWN	REVISIONS -	CHK'D	APP'D
			80% DESIGN		

Jacobs
2600 MICHELSON DRIVE, SUITE 500
IRVINE, CA 92612
T: (949) 224-7500
F: (949) 224-7501

SCALE: AS SHOWN
DRAWN: S. LEONG
CHECKED: B. DENG
DESIGNED: D. GUEST
ENGINEER / ARCHITECT
E. DEMARCO

TERMINAL ISLAND GRADE SEPARATION

TYPICAL SECTION NO.2

THE PORT OF LOS ANGELES
ENGINEERING DIVISION
425 S. PALOS VERDES STREET SAN PEDRO CA 90731-3309

DRAWING NUMBER 1-3497

SHEET NUMBER S-20

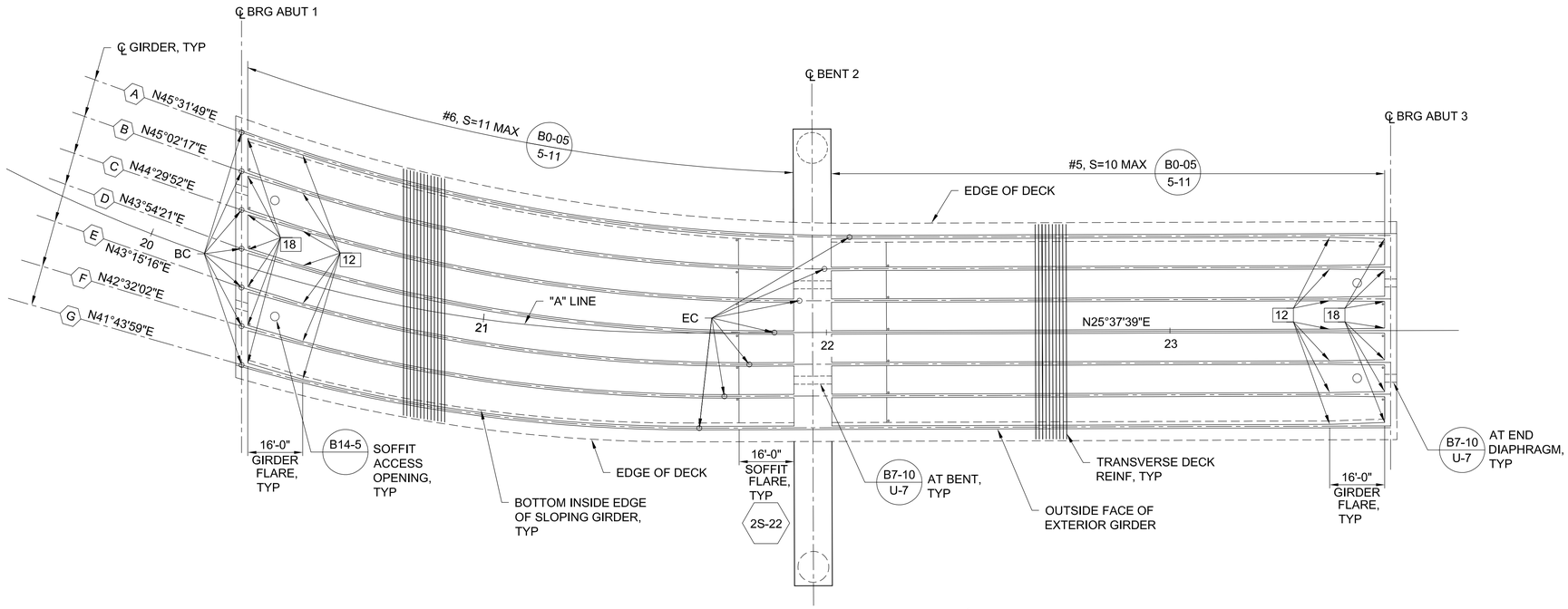

1S-21 / S-21 **PLAN**
SCALE: 1'=20'

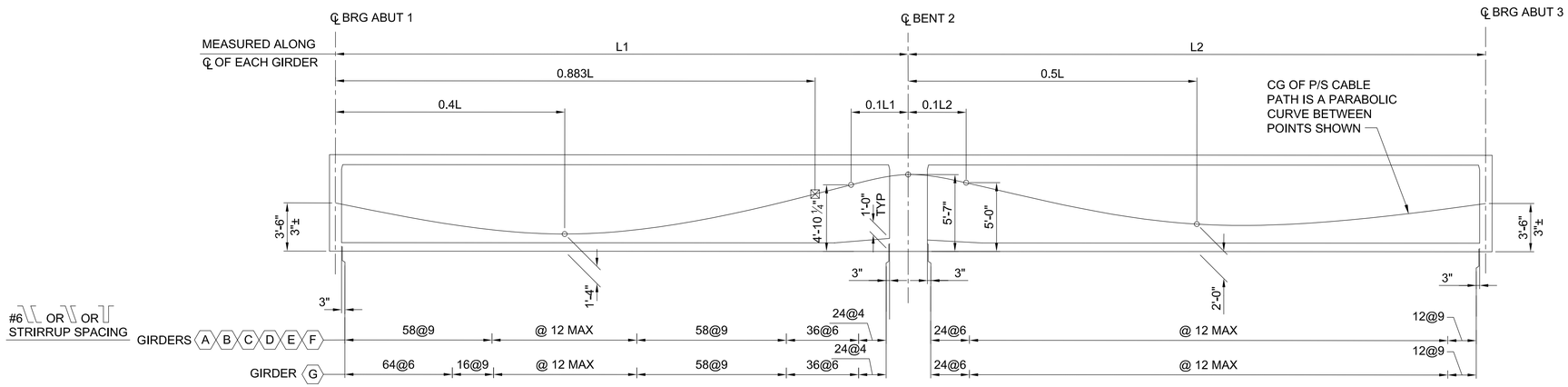

2S-21 / S-21 **LONGITUDINAL SECTION**
SCALE: NTS

LEGEND

- XX — WIDTH OF GIRDER STEM IN INCHES
- ⊠ — POINT OF NO MOVEMENT FOR PRETRESS SHORTENING
- X — GIRDER DESIGNATION
- ○ — SOFFIT ACCESS OPENING
- · — SOFFIT VENT

PRESTRESSING NOTES

270 KSI LOW RELAXATION STRAND:
Pjack = 17,900 KIPS
ANCHOR SET = 3/8 INCH
FRICTION CURVATURE COEFFICIENT (μ = 0.15)
FRICTION WOBBLE COEFFICIENT K = 0.0002/FT
TOTAL NUMBER OF GIRDERS = 7

THE FINAL FORCE RATIO (LARGER DIVIDED BY SMALLER) BETWEEN ANY TWO GIRDERS SHALL NOT EXCEED THE RATIO OF 10 TO 9

CONCRETE: f'c = 6,000 PSI @ 28 DAYS
f'ci = 5,000 PSI @ TIME OF STRESSING

CONTRACTOR SHALL SUBMIT ELONGATION CACULATIONS BASED ON INTIAL STRESS AT ⊠ = 0.925 TIMES JACKING STRESS

BOTH ENDS STRESSING SHALL BE PERFORMED.

GIRDER CURVE DATA (STATIONS MEASURED ALONG "A" LINE)

GIRDER	R	Δ	T	L	BC	EC
A	519.39'	19°54'10"	91.13'	180.42'	20+15.18, 36.76' LT	22+06.83, 27.75' LT
B	510.12'	19°24'38"	87.24'	172.82'	20+19.11, 26.11' LT	21+99.51, 18.51' LT
C	501.64'	18°52'13"	83.36'	165.22'	20+22.83, 15.37' LT	21+92.19, 9.25' LT
D	494.08'	18°16'42"	79.49'	157.62'	20+26.37, 4.63' LT	21+84.87 0.00' RT
E	487.67'	17°37'37"	75.61'	150.03'	20+29.73, 6.14' RT	21+77.55, 9.25' RT
F	482.76'	16°54'23"	71.75'	142.45'	20+32.93, 16.93' RT	21+70.23, 18.50' RT
G	479.82'	16°06'20"	67.89'	134.88'	20+35.98, 27.75' RT	20+62.91, 27.75' RT

NOTE: THE CONTRACTOR SHALL VERIFY ALL CONTROLLING FIELD DIMENSIONS BEFORE ORDERING OR FABRICATING ANY MATERIAL

SHEET ____ OF 400

NO.	DATE	DRAWN	REVISIONS -	CHK'D	APP'D
			NOT FOR CONSTRUCTION		

NO.	DATE	DRAWN	REVISIONS -	CHK'D	APP'D
			80% DESIGN		

Jacobs
2600 MICHELSON DRIVE, SUITE 500
IRVINE, CA 92612
T: (949) 224-7500
F: (949) 224-7501

SCALE: AS SHOWN
DRAWN: S. LEONG
CHECKED: B. DENG
DESIGNED: D. GUEST
ENGINEER / ARCHITECT
B. DENG

TERMINAL ISLAND GRADE SEPARATION

GIRDER LAYOUT

THE PORT OF LOS ANGELES
ENGINEERING DIVISION
425 S. PALOS VERDES STREET SAN PEDRO CA 90731-3309

DRAWING NUMBER 1-3497
SHEET NUMBER S-21

POLAPRO1_040320_BWD

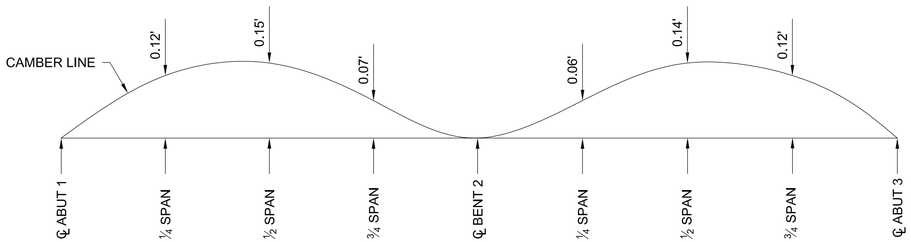

1S-22 / S-22 **CAMBER DIAGRAM**
SCALE: NTS

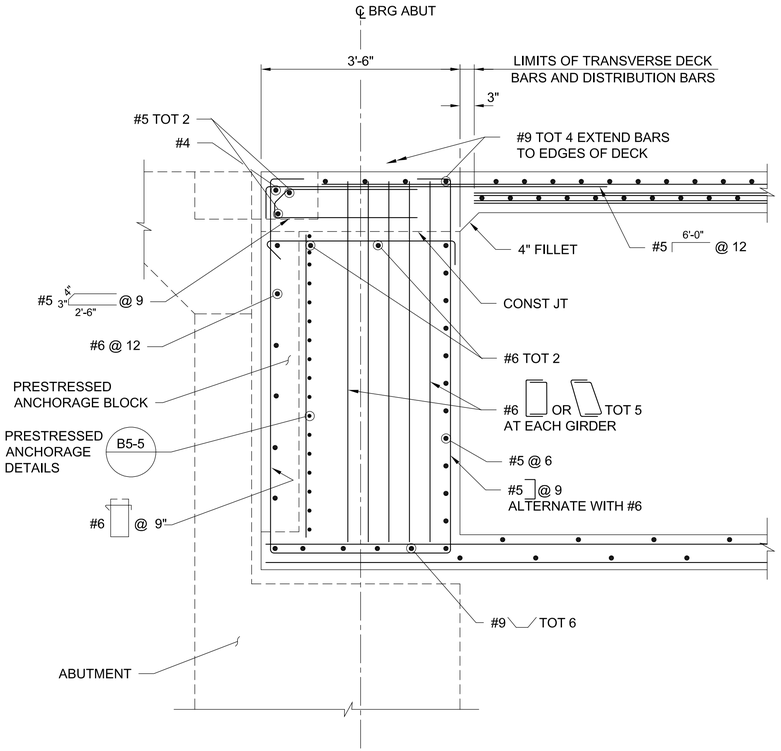

2S-22 / S-22 **END DIAPHRAGM DETAIL**
SCALE: 3/4" =1'-0"

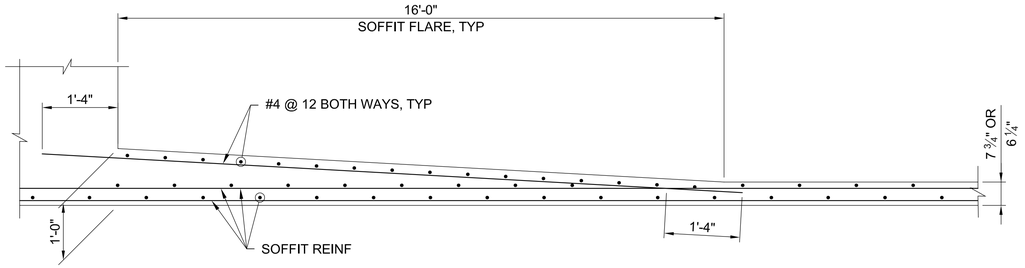

3S-22 / S-22 **SOFFIT FLARE DETAIL**
SCALE: 1/2" =1'-0"

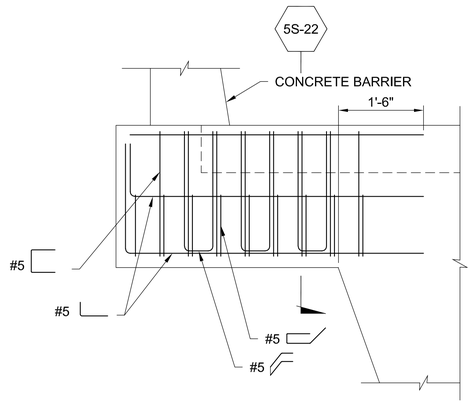

4S-22 / 2S-06, 2S-07 **THICKENED OVERHANG DETAIL**
SCALE: 3/4" =1'-0"

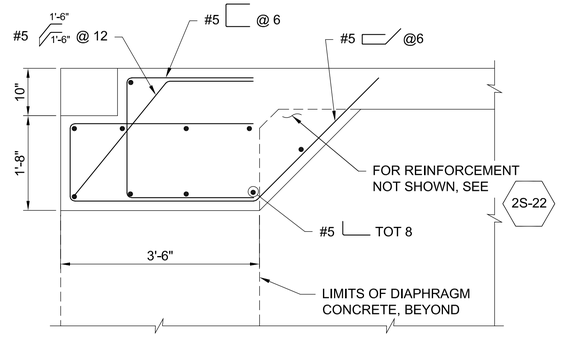

5S-22 / 4S-22 **SECTION**
SCALE: 3/4" =1'-0"

NOTE: THE CONTRACTOR SHALL VERIFY ALL CONTROLLING FIELD DIMENSIONS BEFORE ORDERING OR FABRICATING ANY MATERIAL

SHEET ____ OF 400

NO.	DATE	DRAWN	REVISIONS -	CHK'D	APP'D
			NOT FOR CONSTRUCTION		

NO.	DATE	DRAWN	REVISIONS -	CHK'D	APP'D
			80% DESIGN		

Jacobs
2600 MICHELSON DRIVE, SUITE 500
IRVINE, CA 92612
T: (949) 224-7500
F: (949) 224-7501

SCALE: AS SHOWN
DRAWN: S. LEONG
CHECKED: B. DENG
DESIGNED: D. GUEST
ENGINEER / ARCHITECT
E. DEMARCO

TERMINAL ISLAND GRADE SEPARATION

GIRDER DETAILS AND CAMBER DIAGRAM

THE PORT OF LOS ANGELES
ENGINEERING DIVISION
425 S. PALOS VERDES STREET SAN PEDRO CA 90731-3309

DRAWING NUMBER 1-3497
SHEET NUMBER S-22

NOTES

1. ONLY ADDITIONAL REINFORCEMENT IS SHOWN, TYPICAL REINFORCEMENT IS NOT SHOWN FOR CLARITY, FOR TYPICAL REINFORCEMENT, SEE "TYPICAL SECTION NO. 1" AND "TYPICAL SECTION NO. 2" SHEETS.
2. REBAR SPLICING IS NOT ALLOWED IN ADDITIONAL REINFORCEMENT.
3. ADJUST ADDITIONAL SOFFIT BAR AS NEEDED TO CLEAR SOFFIT LIGHTING.

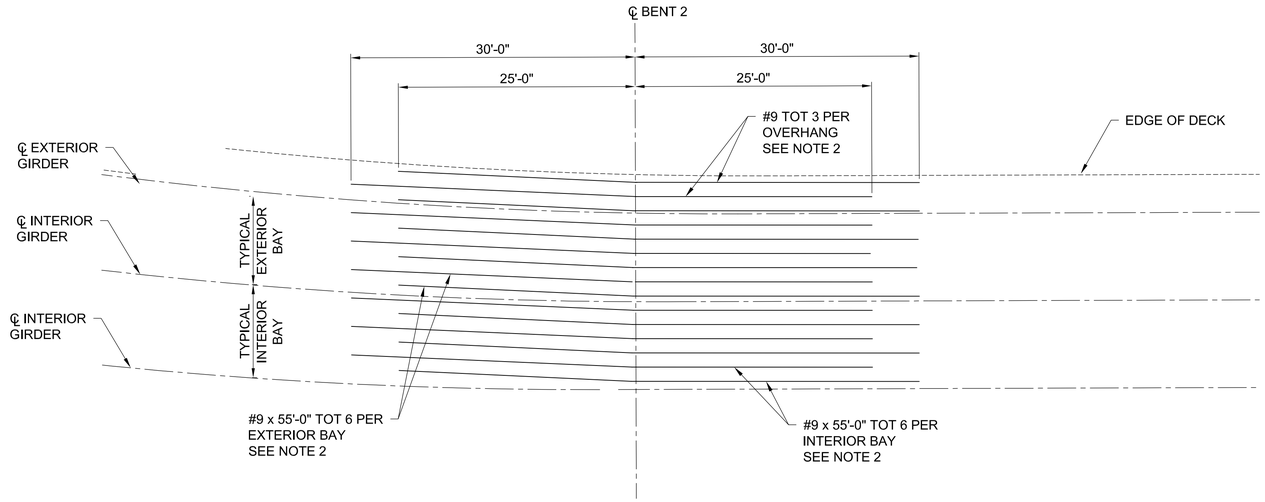

1S-23 / S-23 DECK SLAB REINFORCEMENT
SCALE: 1/8"=1'-0"

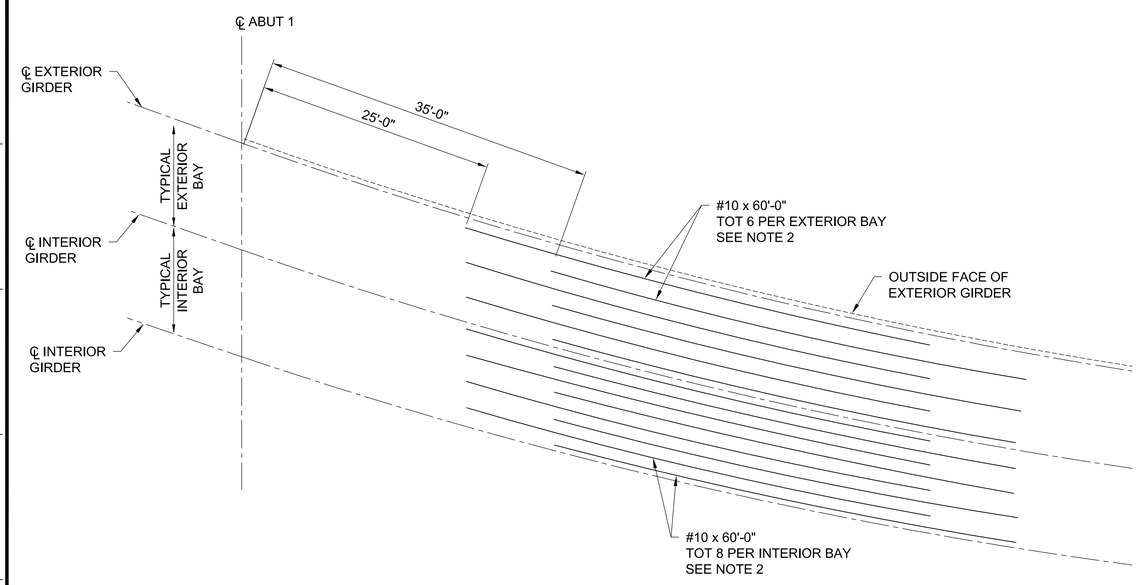

2S-23 / S-23 SOFFIT SLAB REINFORCEMENT
SCALE: 1/8"=1'-0"

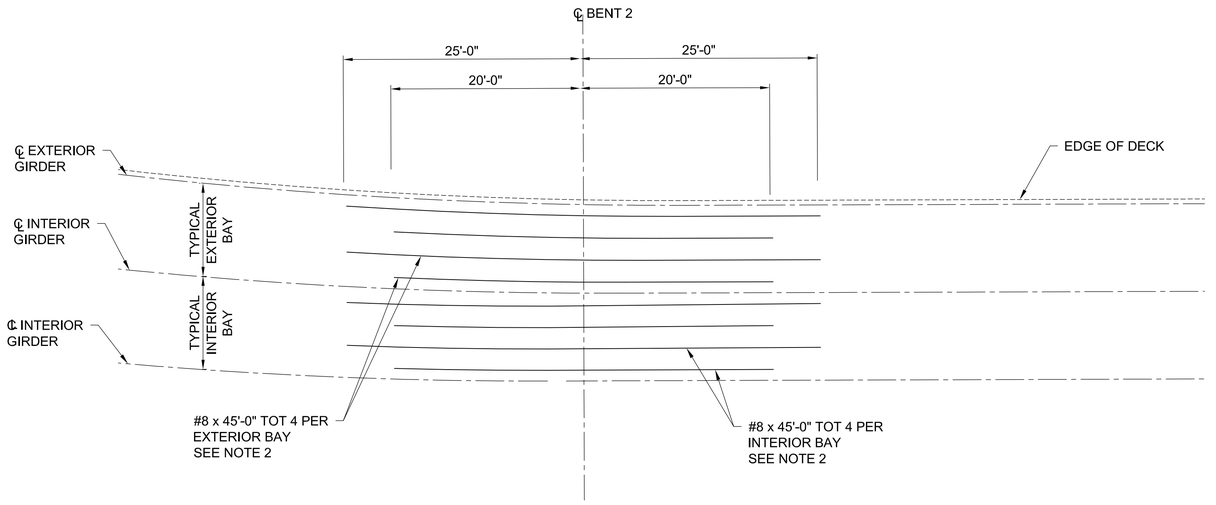

3S-23 / S-23 SOFFIT SLAB REINFORCEMENT
SCALE: 1/8"=1'-0"

NOTE: THE CONTRACTOR SHALL VERIFY ALL CONTROLLING FIELD DIMENSIONS BEFORE ORDERING OR FABRICATING ANY MATERIAL

SHEET ____ OF 400

NO.	DATE	DRAWN	REVISIONS -	CHK'D	APP'D
			NOT FOR CONSTRUCTION		

NO.	DATE	DRAWN	REVISIONS -	CHK'D	APP'D
			80% DESIGN		

Jacobs
2600 MICHELSON DRIVE, SUITE 500
IRVINE, CA 92612
T: (949) 224-7500
F: (949) 224-7501

SCALE: AS SHOWN
DRAWN: S. LEONG
CHECKED: B. DENG
DESIGNED: D. GUEST
ENGINEER / ARCHITECT
B. DENG

TERMINAL ISLAND GRADE SEPARATION

DECK REINFORCEMENT

THE PORT OF LOS ANGELES
ENGINEERING DIVISION
425 S. PALOS VERDES STREET SAN PEDRO CA 90731-3309

DRAWING NUMBER: 1-3497
SHEET NUMBER: S-23

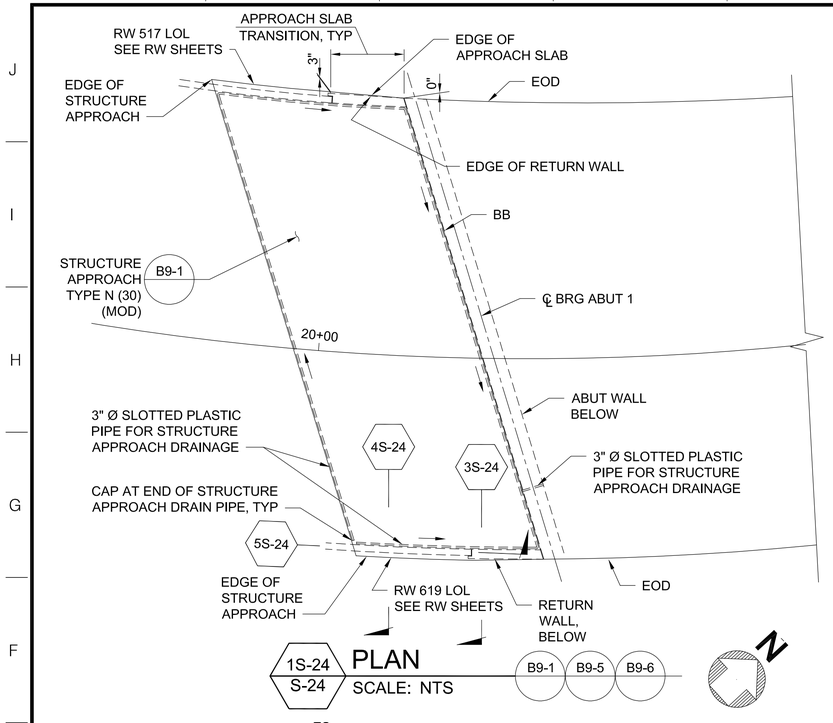

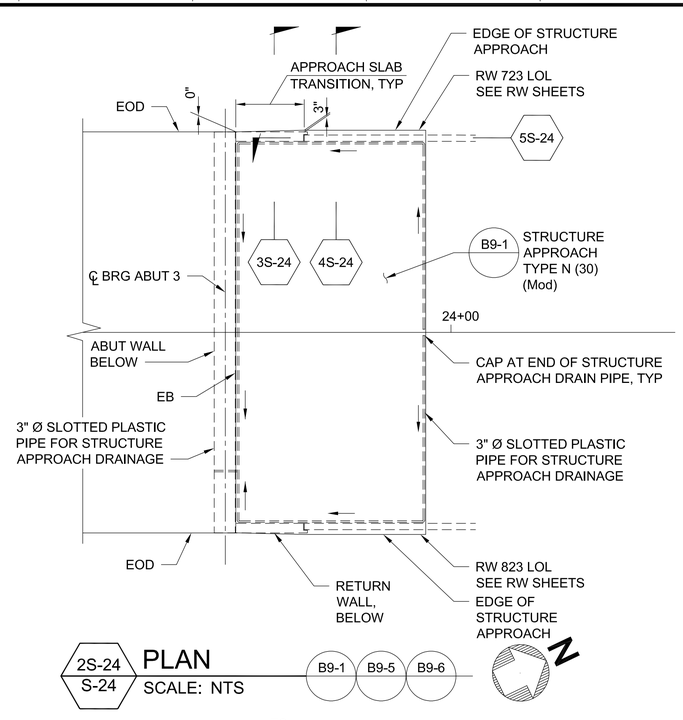

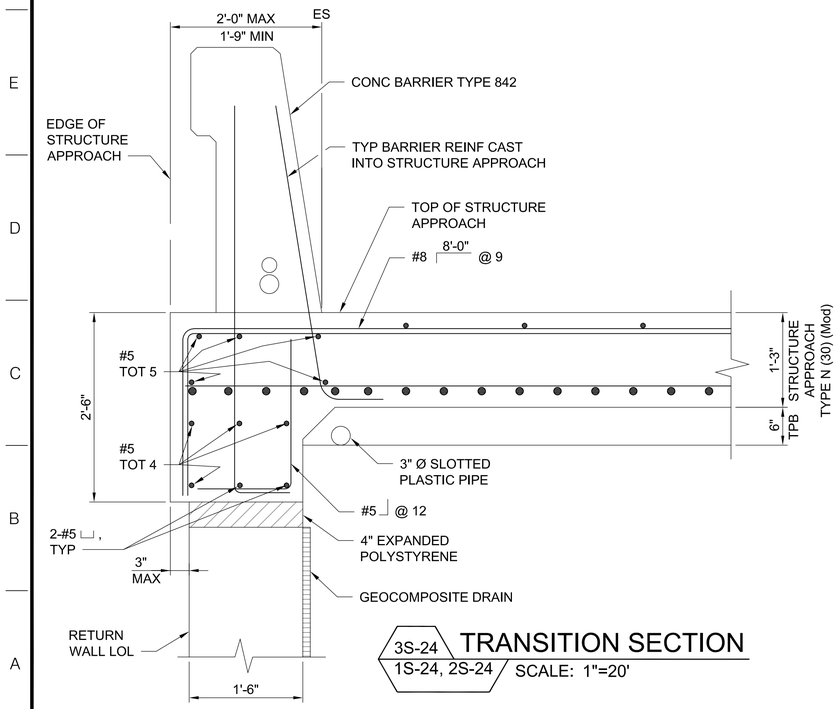

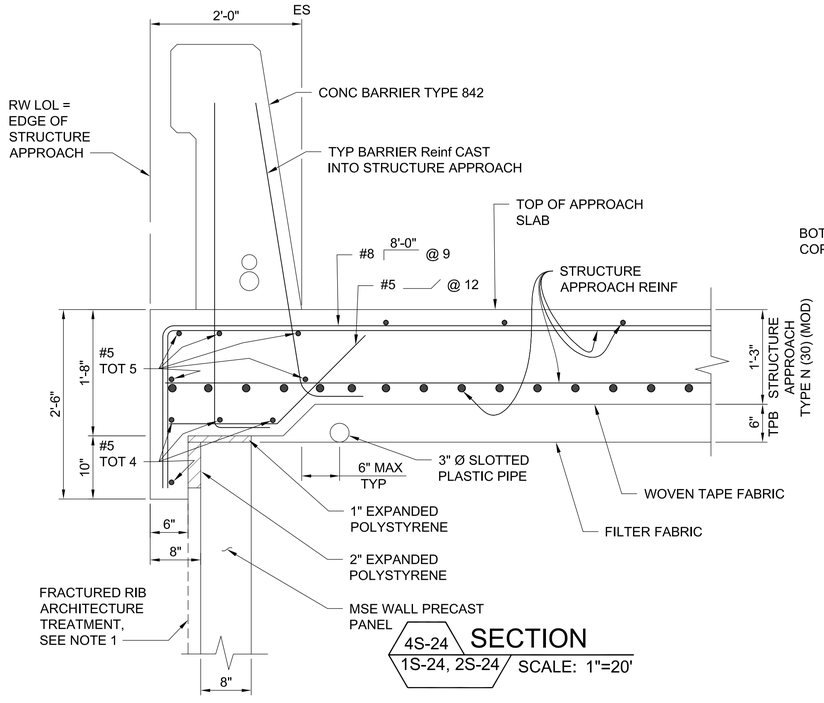

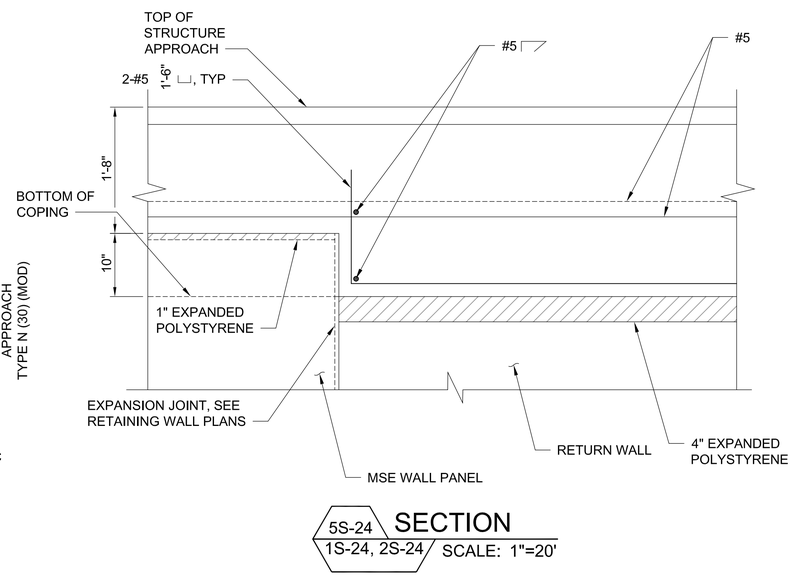

NOTE: THE CONTRACTOR SHALL VERIFY ALL CONTROLLING FIELD DIMENSIONS BEFORE ORDERING OR FABRICATING ANY MATERIAL

SHEET ____ OF 400

NO.	DATE	DRAWN	REVISIONS -	CHK'D	APP'D
			NOT FOR CONSTRUCTION		

NO.	DATE	DRAWN	REVISIONS -	CHK'D	APP'D
			80% DESIGN		

Jacobs
2600 MICHELSON DRIVE, SUITE 500
IRVINE, CA 92612
T: (949) 224-7500
F: (949) 224-7501

SCALE:	AS SHOWN
DRAWN:	S. LEONG
CHECKED:	B. DENG
DESIGNED:	D. GUEST
ENGINEER / ARCHITECT	B. DENG

TERMINAL ISLAND GRADE SEPARATION

STRUCTURE APPROACH AND DRAINAGE DETAILS NO.1

THE PORT OF LOS ANGELES
ENGINEERING DIVISION
425 S. PALOS VERDES STREET SAN PEDRO CA 90731-3309

DRAWING NUMBER	SHEET NUMBER
1-3497	S-24

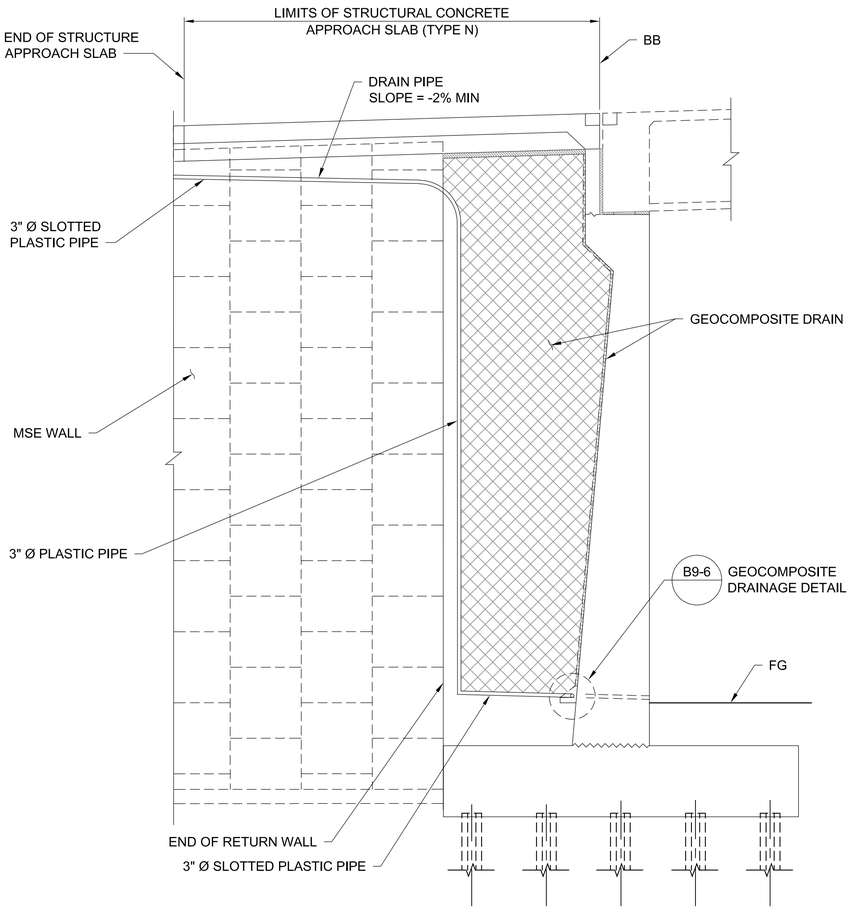

1S-25 / S-25 SECTION
SCALE: 3/16"=1'-0"

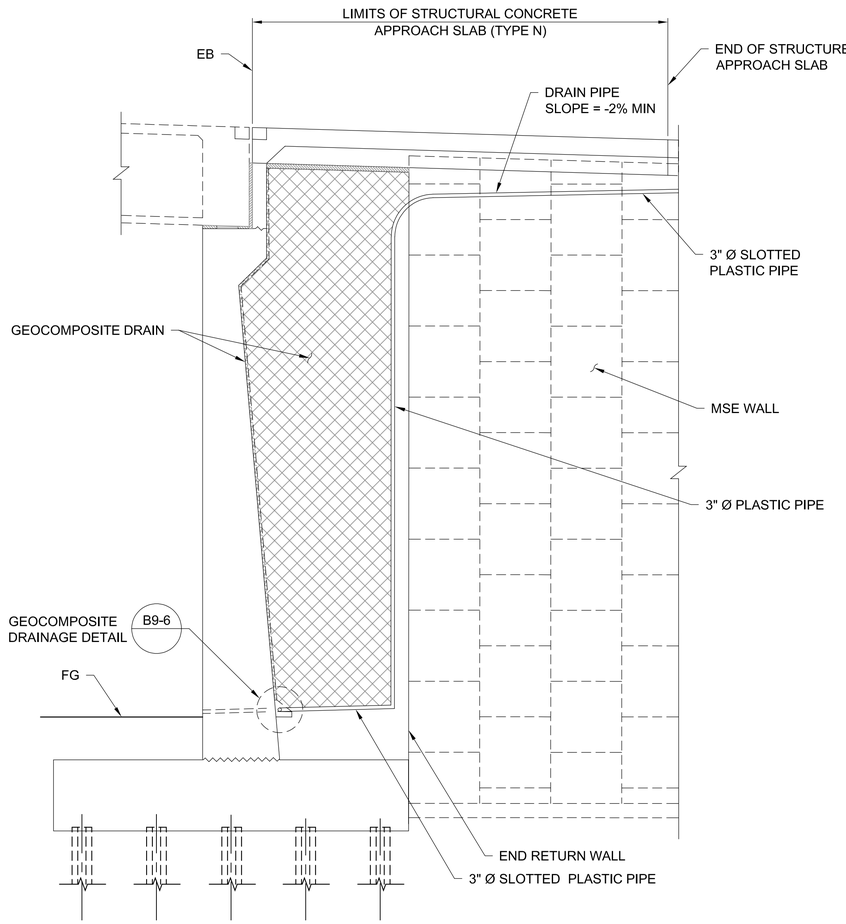

2S-25 / S-25 SECTION
SCALE: 3/16"=1'-0"

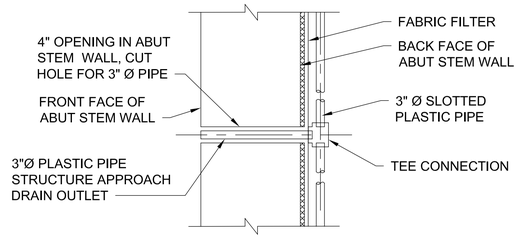

PLAN

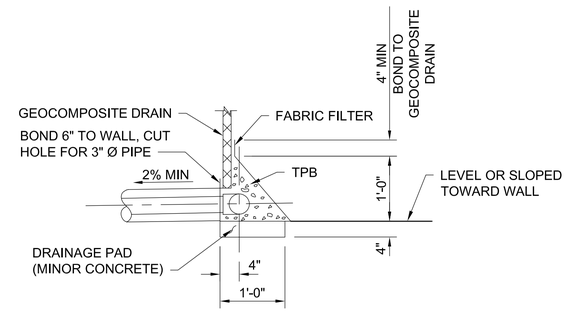

ELEVATION AT OUTLET

3S-25 / S-25 GEOCOMPOSITE DRAINAGE DETAILS
SCALE: NTS

NOTE: THE CONTRACTOR SHALL VERIFY ALL CONTROLLING FIELD DIMENSIONS BEFORE ORDERING OR FABRICATING ANY MATERIAL

SHEET ____ OF 400

NO.	DATE	DRAWN	REVISIONS -	CHK'D	APP'D
			NOT FOR CONSTRUCTION		

NO.	DATE	DRAWN	REVISIONS -	CHK'D	APP'D
			80% DESIGN		

Jacobs
2600 MICHELSON DRIVE, SUITE 500
IRVINE, CA 92612
T: (949) 224-7500
F: (949) 224-7501

SCALE:	AS SHOWN
DRAWN:	S. LEONG
CHECKED:	B. DENG
DESIGNED:	D. GUEST
ENGINEER / ARCHITECT	B. DENG

TERMINAL ISLAND GRADE SEPARATION

APPROACH SLAB AND DRAINAGE DETAILS NO. 2

THE PORT OF LOS ANGELES
ENGINEERING DIVISION
425 S. PALOS VERDES STREET SAN PEDRO CA 90731-3309

DRAWING NUMBER	SHEET NUMBER
1-3497	S-25

POLAPRD1_04/2023_BWD

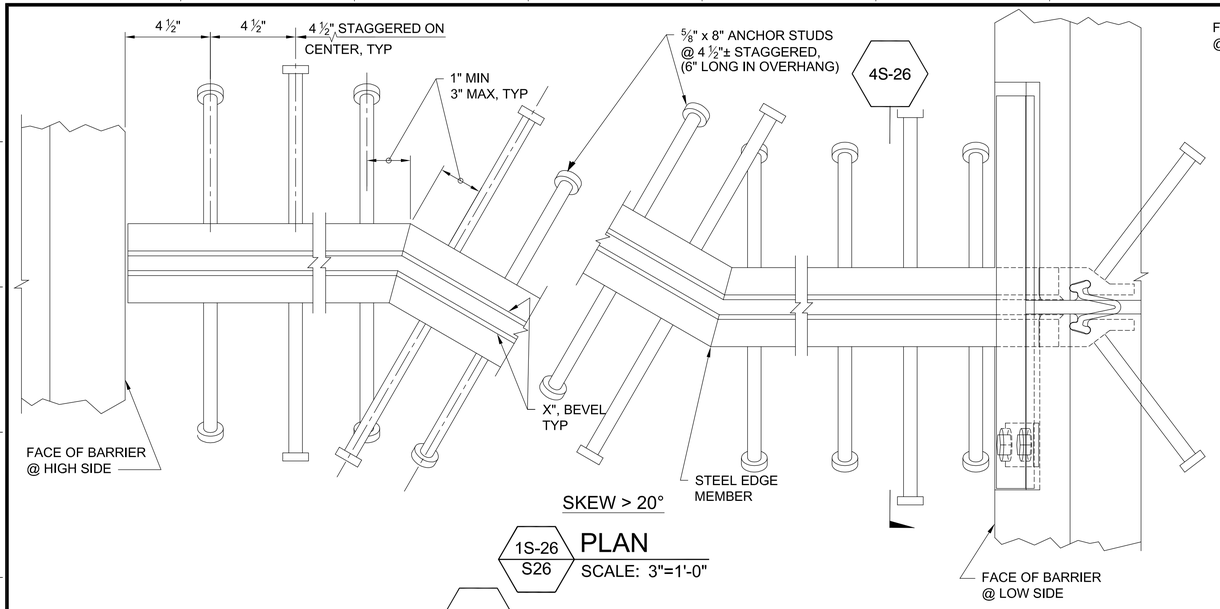

SKEW > 20°

1S-26 / S26 PLAN
SCALE: 3"=1'-0"

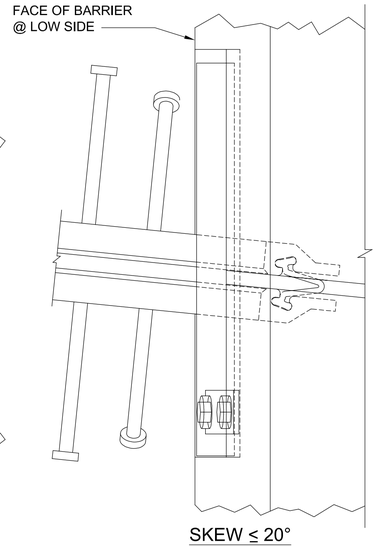

SKEW ≤ 20°

2S-26 / S26 PLAN
SCALE: 3"=1'-0"

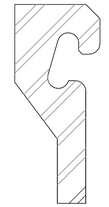

3S-26 / S-26 SCHEMATIC STEEL EDGE MEMBER
SCALE: NTS

NOTES:

1. ALTERNATIVELY, FILLET OR COMPLETE PENETRATION WELDS MAY BE USED AT ANCHOR STUDS.
2. ALTERNATE TYPES OF ANCHOR STUDS MAY BE PERMITTED SUBJECT TO THE AUTHORIZATION BY THE ENGINEER.
3. JOINT SEAL ASSEMBLY TO BE USED IN CONJUNCTION WITH CLOSURE POUR. (SEE OTHER SHEETS FOR LIMITS). CLOSURE POUR SHALL NOT BE PLACED UNTIL FINAL DECK SURFACE IS WITHIN THE TOLERANCES SPECIFIED.
4. USE JOINT AT CROWN OF ROADWAY, AT ANY CHANGE IN TRANSVERSE SLOPE IN DECK AND AT CHANGES IN HORIZONTAL DIRECTION. PLACE OTHER JOINTS AT OR NEAR LANES. ALL METAL PARTS TO BE PAINTED OR GALVANIZED AFTER FABRICATION.
5. SHEET NEOPRENE SHALL BE FABRICATED IN ONE CONTINUOUS PIECE AND SHALL BE FABRICATED TO BEND AROUND CORNERS. FIELD SPLICES OF THE NEOPRENE ARE NOT ALLOWED.
6. INSERT ASSEMBLY OR EXPANSION ANCHORAGE FOR ⅜" x1 ¾" BOLTS. USE INSTALLATION BOLTS EXTENDED ½" MINIMUM PAST NUT AND COAT WITH BOND BREAKER, AFTER CONCRETE HAS CURED, REMOVE INSTALLATION BOLTS, INSTALL HS BOLTS AND SHEET NEOPRENE.
7. USE SIDEWALK DETAIL AT ALL SIDEWALK JOINTS. USE BARRIER DETAIL LOW SIDE AT BOTH SIDES IF THE ROADWAY IS CROWNED, OR IF THE DIFFERENCE IN ELEVATION BETWEEN THE ENDS OF THE SEAL IS 6 INCHES OR LESS.
8. a_c , a_s , ARE THE THERMAL EXPANSION COEFFICIENTS FOR CONCRETE AND STEEL RESPECTIVELY.
9. ANCHOR STUDS SHALL CONFORM TO ASTM A108.

8S-26

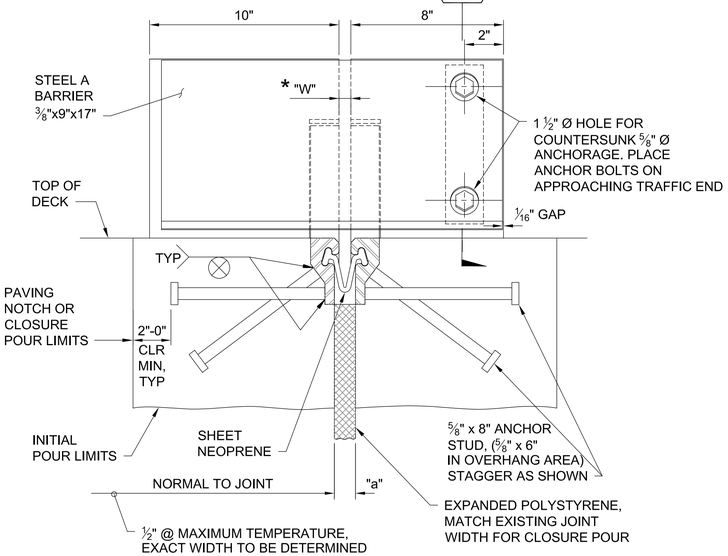

4S-26 / S-26 SECTION A-A
SCALE: 3"=1'-0"

JOINT INFORMATION			"a" DIMENSIONS		
LOCATION	MOVEMENT RANGE (MR)	SKEW	WINTER	SPRING & FALL	SUMMER
ABUT 1	2 1/2"	17 49'13"	1 1/2"	1"	3/4"
ABUT 3	2 1/2"	0°	1 1/2"	1"	3/4"

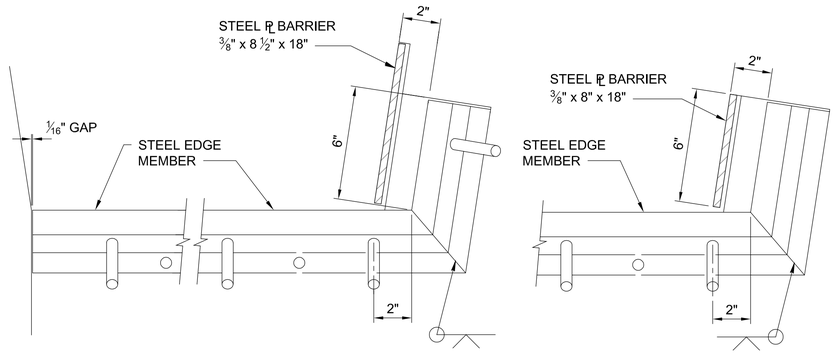

HIGH SIDE LOW SIDE

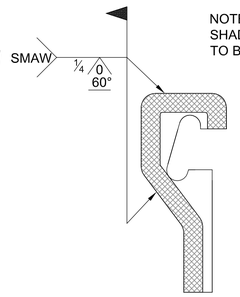

NOTE: SHADED AREAS TO BE WELDED

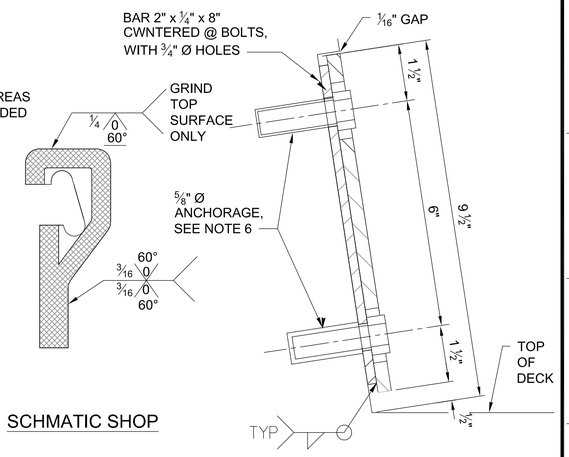

SCHMATIC FIELD SCHMATIC SHOP

* TO SET MINIMUM JOINT OPENING "W"

"W" = ½"+[(MAX STR TEMPORARTURE IN °F) - (ACTUAL STR TEMPORATURE IN °F)]*(a_c or a_s)(12) (CONTRIBUTORY L IN FEET)

- ½" MINIMUM
- a_C = 0.0000060
- a_S = 0.0000065

5S-26 / S-26 BARRIER DETAIL
SCALE: 3"=1'-0"

6S-26 / S-26 SIDEWALK DETAIL
SCALE: 3"=1'-0"

7S-26 / S-26 WELD DETAIL
SCALE: NTS

8S-26 / S-26 SECTION B-B
SCALE: 6"=1'-0"

NOTE: THE CONTRACTOR SHALL VERIFY ALL CONTROLLING FIELD DIMENSIONS BEFORE ORDERING OR FABRICATING ANY MATERIAL

SHEET ____ OF 400

NO.	DATE	DRAWN	REVISIONS -	CHK'D	APP'D
			NOT FOR CONSTRUCTION		

NO.	DATE	DRAWN	REVISIONS -	CHK'D	APP'D
			80% DESIGN		

Jacobs
2600 MICHELSON DRIVE, SUITE 500
IRVINE, CA 92612
T: (949) 224-7500
F: (949) 224-7501

SCALE:	AS SHOWN
DRAWN:	S. LEONG
CHECKED:	B. DENG
DESIGNED:	D. GUEST
	ENGINEER / ARCHITECT
	B. DENG

TERMINAL ISLAND GRADE SEPARATION

JOINT SEAL DETAILS

THE PORT OF LOS ANGELES
ENGINEERING DIVISION
425 S. PALOS VERDES STREET SAN PEDRO CA 90731-3309

DRAWING NUMBER	SHEET NUMBER
1-3497	S-26

POLAPR01_042022_BW2

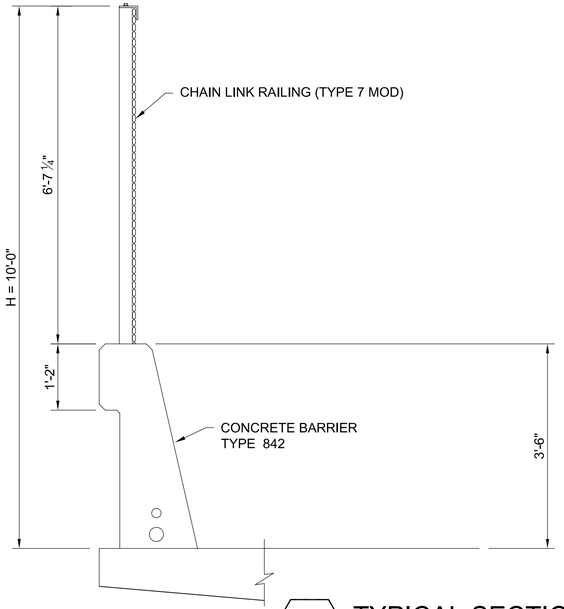

1S-27 / S-27 **TYPICAL SECTION**
SCALE: NTS

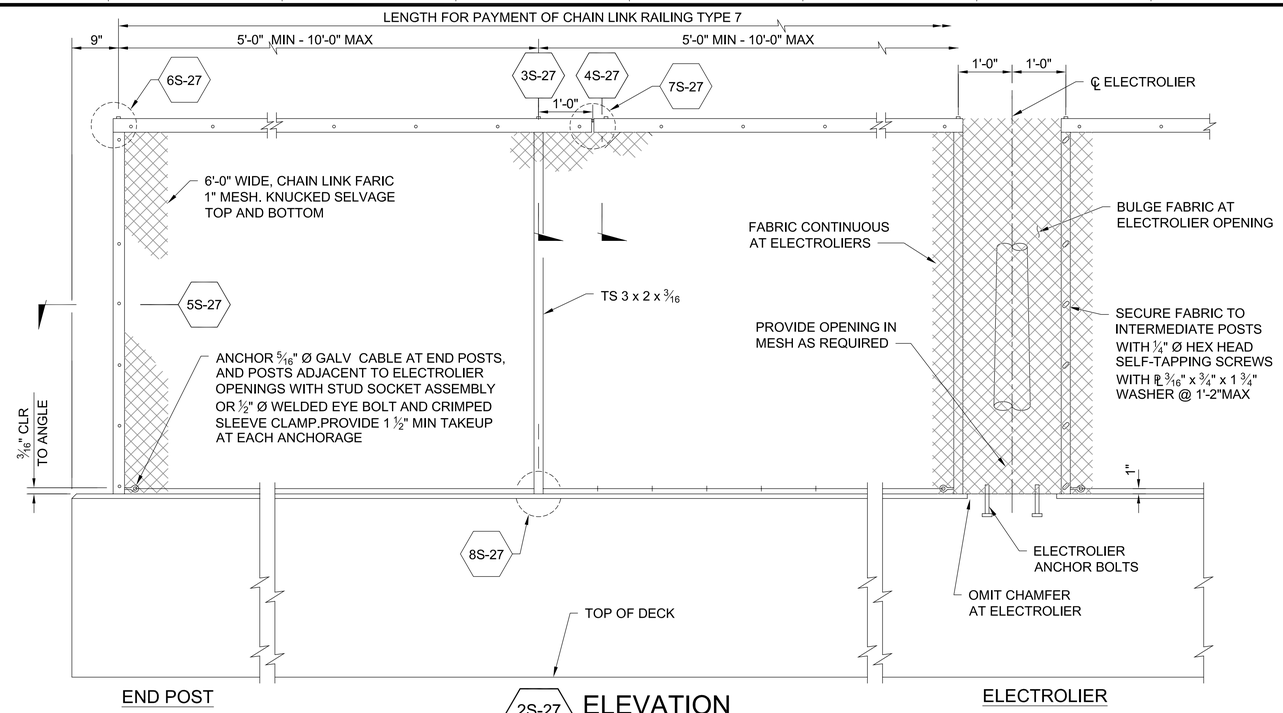

2S-27 / S-27 **ELEVATION**
SCALE: NTS

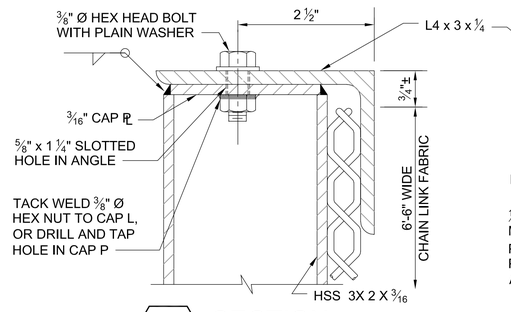

3S-27 / S-27 **SECTION**
SCALE: NTS

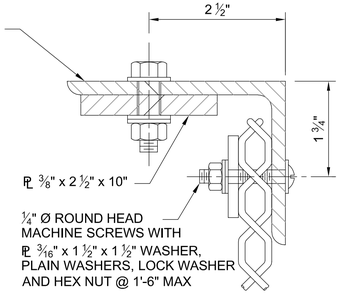

4S-27 / S-27 **SECTION**
SCALE: NTS

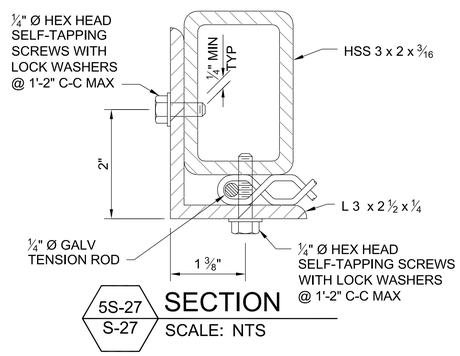

5S-27 / S-27 **SECTION**
SCALE: NTS

NOTES:

1. POSTS SHALL BE VERTICAL.
2. RAILING SHALL CONFORM TO HORIZONTAL AND VERTICAL ALIGNMENT.
3. HORIZONTAL ANGLE SHALL BE CONTINUOUS OVER NOT LESS THAN TWO INTERMEDIATE POSTS, EXCEPT THAT A SHORTER LENGTH IS PERMITTED AT EXPANSION JOINTS, ELECTROLIERS AND OTHER RAIL DISCONTINUITIES.
4. WHEN RAIL IS ON SLOPE, PLACE FABRIC PARALLEL TO SLOPE.
5 FOR DETAILS AND REINFORCEMENT NOT SHOWN SEE STANDARD PLANS B11-81 AND B11-82.

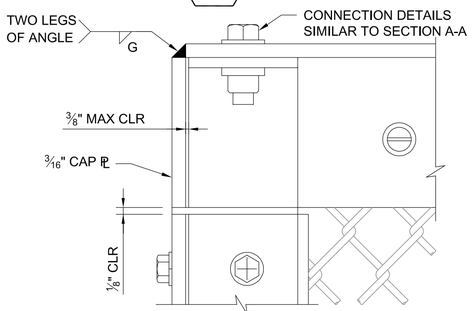

6S-27 / S-27 **END POST ELEVATION**
SCALE: NTS

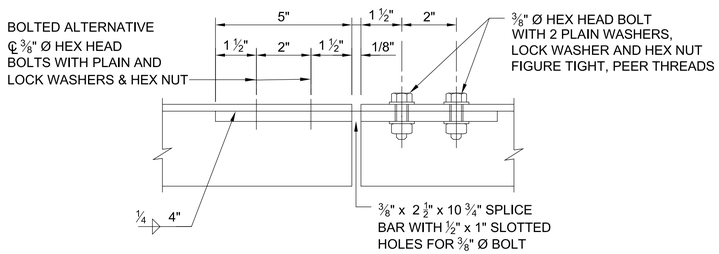

7S-27 / S-27 **SPLICE DETAIL**
SCALE: NTS

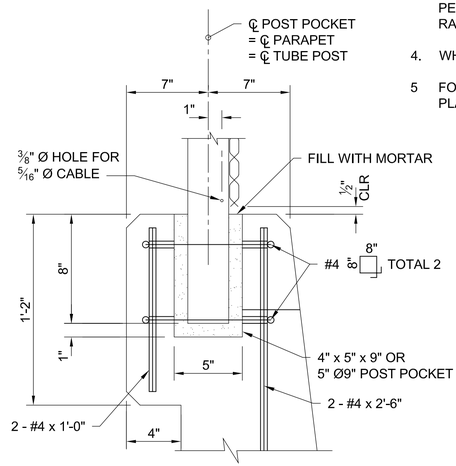

8S-27 / S-27 **POST ANCHORAGE DETAIL**
SCALE: NTS

SHEET ____ OF 400

NO.	DATE	DRAWN	REVISIONS -	CHK'D	APP'D
			NOT FOR CONSTRUCTION		

NO.	DATE	DRAWN	REVISIONS -	CHK'D	APP'D
			80% DESIGN		

Jacobs
2600 MICHELSON DRIVE, SUITE 500
IRVINE, CA 92612
T: (949) 224-7500
F: (949) 224-7501

SCALE:	AS SHOWN
DRAWN:	S. LEONG
CHECKED:	B. DENG
DESIGNED:	D. GUEST
ENGINEER / ARCHITECT	
B. DENG	

TERMINAL ISLAND GRADE SEPARATION

CHANIN LINK RAILING (TYPE 7) (MOD)

THE PORT OF LOS ANGELES
ENGINEERING DIVISION
425 S. PALOS VERDES STREET SAN PEDRO CA 90731-3309

DRAWING NUMBER	SHEET NUMBER
1-3497	S-27

BASIS OF BEARINGS AND COORDINATES:

COORDINATES ARE BASED ON THE 1983 CALIFORNIA COORDINATE SYSTEM (CCS83) ZONE 5 .

COORDINATES SHOWN ROUNDED OFF TO THE NEAREST TENTH ARE APPROXIMATE.

BASIS OF ELEVATIONS:

ELEVATIONS ARE BASED ON NATIONAL GEODETIC VERTICAL DATUM (NGVD 29).

NOTES:

THIS LOTB SHEET (BORING RECORD) WAS PREPARED IN ACCORDANCE WITH CALTRANS SOIL AND ROCK LOGGING, CLASSIFICATION AND PRESENTATION MANUAL (2022).

BOREHOLE LOCATION TABLE

H ID	N r	E	E ( )
B25-01	1729264	6482657	10.9
B25-02	1729218	6482699	11.1
B25-03	1729118	6482911	12.9
B25-04	1729056	6483275	14.4
B25-05	1729161	6483444	14.7
B25-06	1729328	6483509	15.3
B25-07	1729231	6483599	15.7
B25-08	1729485	6483664	13.6
B25-09	1729762	6483791	13.7
B25-10	1730029	6483915	13.5
CPT25-01	1728986	6483079	14.2
CPT25-02	1729231	6483599	15.8
CPT25-03	1729589	6483722	13.8
CPT25-04	1729881	6483871	14.1
CPT25-05	1730145	6483996	14.0

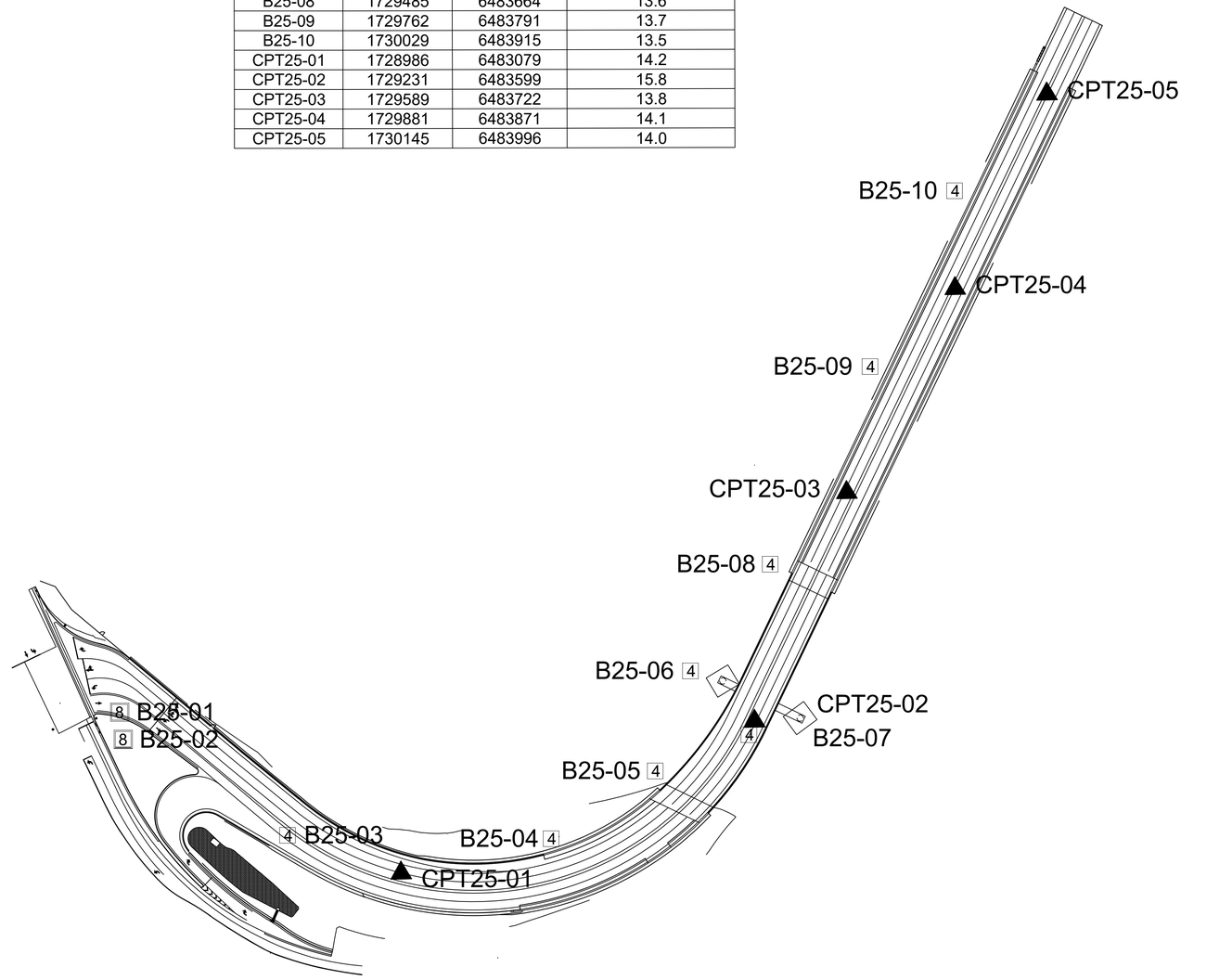

1RW-31
RW-31

PLAN
SCALE: 1" = 100'

N

100' 0'-0" 100' 200'
SCALE: 1" = 100'

SHEET ____ OF 400

NO.	DATE	DRAWN	REVISIONS -	CHK'D	APP'D
			NOT FOR CONSTRUCTION		

NO.	DATE	DRAWN	REVISIONS -	CHK'D	APP'D
			80% DESIGN		

Earth Mechanics, Inc.
Geotechnical and Earthquake Engineering

SCALE:	1" = 100'
DRAWN:	X T
CHECKED:	A dr K r
DESIGNED:	A dr K r

ENGINEER / ARCHITECT

TERMINAL ISLAND GRADE SEPARATION

LOG OF TEST BORINGS LAYOUT

THE PORT OF LOS ANGELES
ENGINEERING DIVISION
425 S. PALOS VERDES STREET SAN PEDRO CA 90731-3309

DRAWING NUMBER 1-3497

SHEET NUMBER S-28

POLAPR01_042023_BWD

N r	E	E ( )
1729161	6483444	14.7

NOTES:

THIS LOTB SHEET (BORING RECORD) WAS PREPARED IN ACCORDANCE WITH CALTRANS SOIL AND ROCK LOGGING, CLASSIFICATION AND PRESENTATION MANUAL (2022).

BASIS OF BEARINGS AND COORDINATES:

COORDINATES ARE BASED ON THE 1983 CALIFORNIA COORDINATE SYSTEM (CCS83) ZONE 5 .

COORDINATES SHOWN ROUNDED OFF TO THE NEAREST TENTH ARE APPROXIMATE.

BASIS OF ELEVATIONS:

ELEVATIONS ARE BASED ON NATIONAL GEODETIC VERTICAL DATUM (NGVD 29).

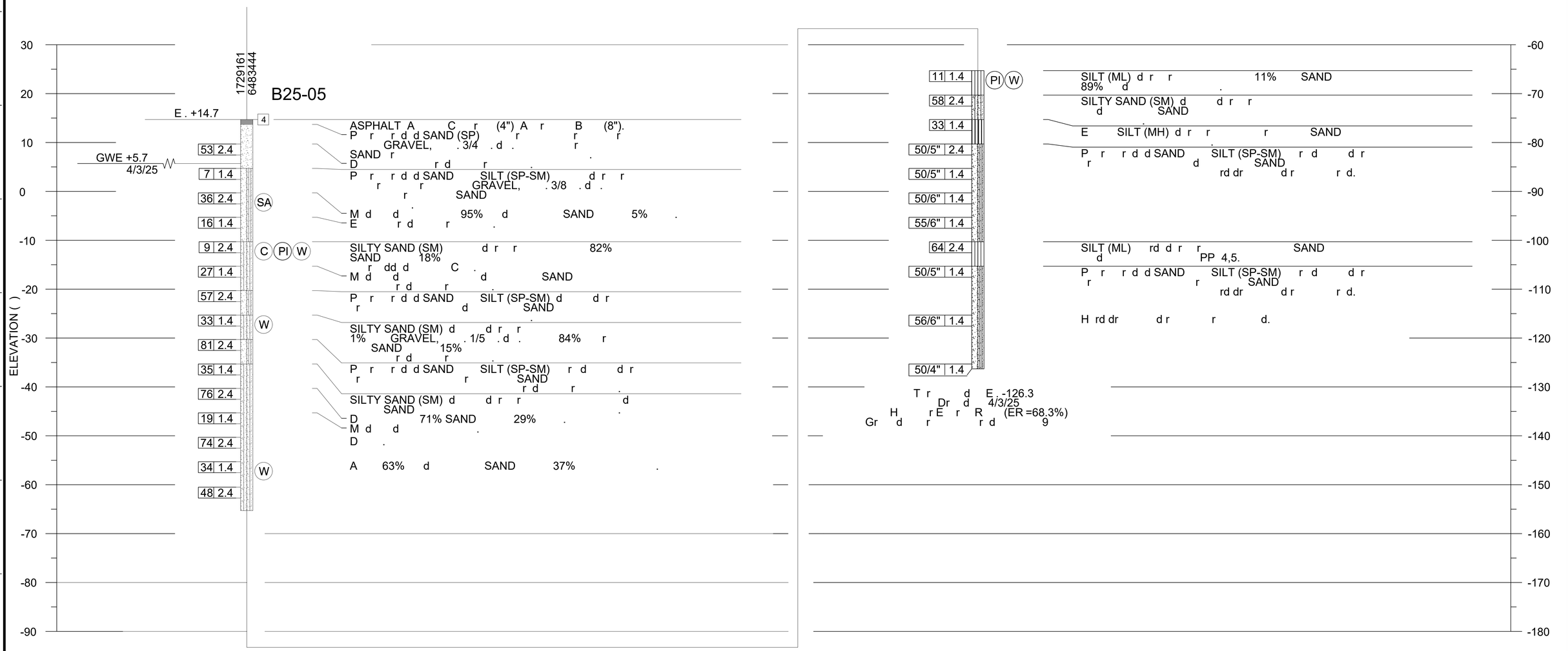

1RW-32
RW-32

LOTB

SCALE: 1" = 10'

SHEET ____ OF 400

NO.	DATE	DRAWN	REVISIONS -	CHK'D	APP'D
			NOT FOR CONSTRUCTION		

NO.	DATE	DRAWN	REVISIONS -	CHK'D	APP'D
			80% DESIGN		

Earth Mechanics, Inc.
Geotechnical and Earthquake Engineering

SCALE:	1" = 10'
DRAWN:	X T
CHECKED:	A dr K r
DESIGNED:	A dr K r

ENGINEER / ARCHITECT

TERMINAL ISLAND GRADE SEPARATION

LOG OF TEST BORINGS - BRIDGE (1 5)

THE PORT OF LOS ANGELES
ENGINEERING DIVISION
425 S. PALOS VERDES STREET SAN PEDRO CA 90731-3309

DRAWING NUMBER 1-3497

SHEET NUMBER S-29

POLAPROT_04/2023_BWD

N r	E	E ( )
1729231	6483599	15.8

NOTES:

THIS LOTB SHEET (BORING RECORD) WAS PREPARED IN ACCORDANCE WITH CALTRANS SOIL AND ROCK LOGGING, CLASSIFICATION AND PRESENTATION MANUAL (2022).

BASIS OF BEARINGS AND COORDINATES:

COORDINATES ARE BASED ON THE 1983 CALIFORNIA COORDINATE SYSTEM (CCS83) ZONE 5 .

COORDINATES SHOWN ROUNDED OFF TO THE NEAREST TENTH ARE APPROXIMATE.

BASIS OF ELEVATIONS:

ELEVATIONS ARE BASED ON NATIONAL GEODETIC VERTICAL DATUM (NGVD 29).

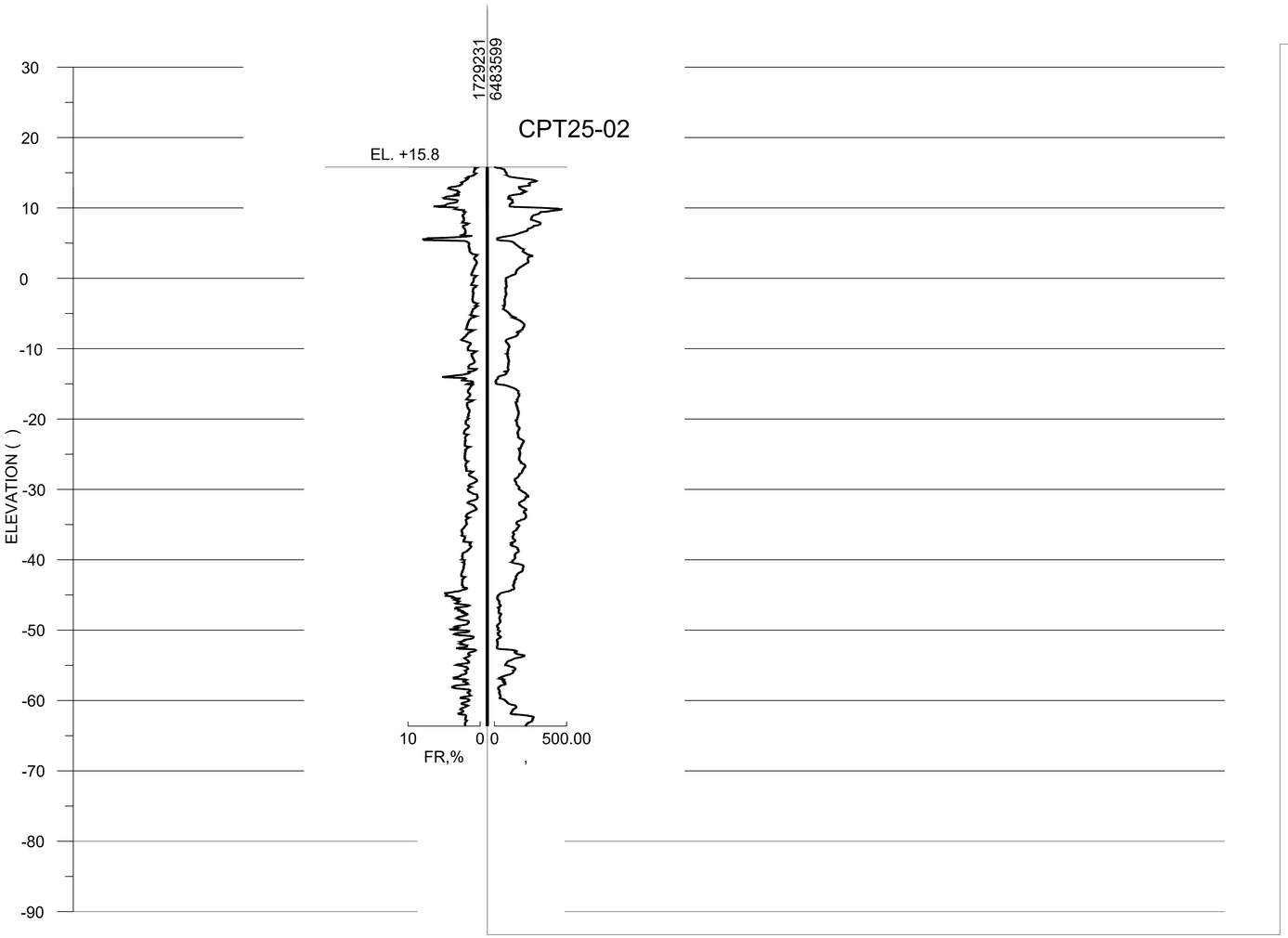

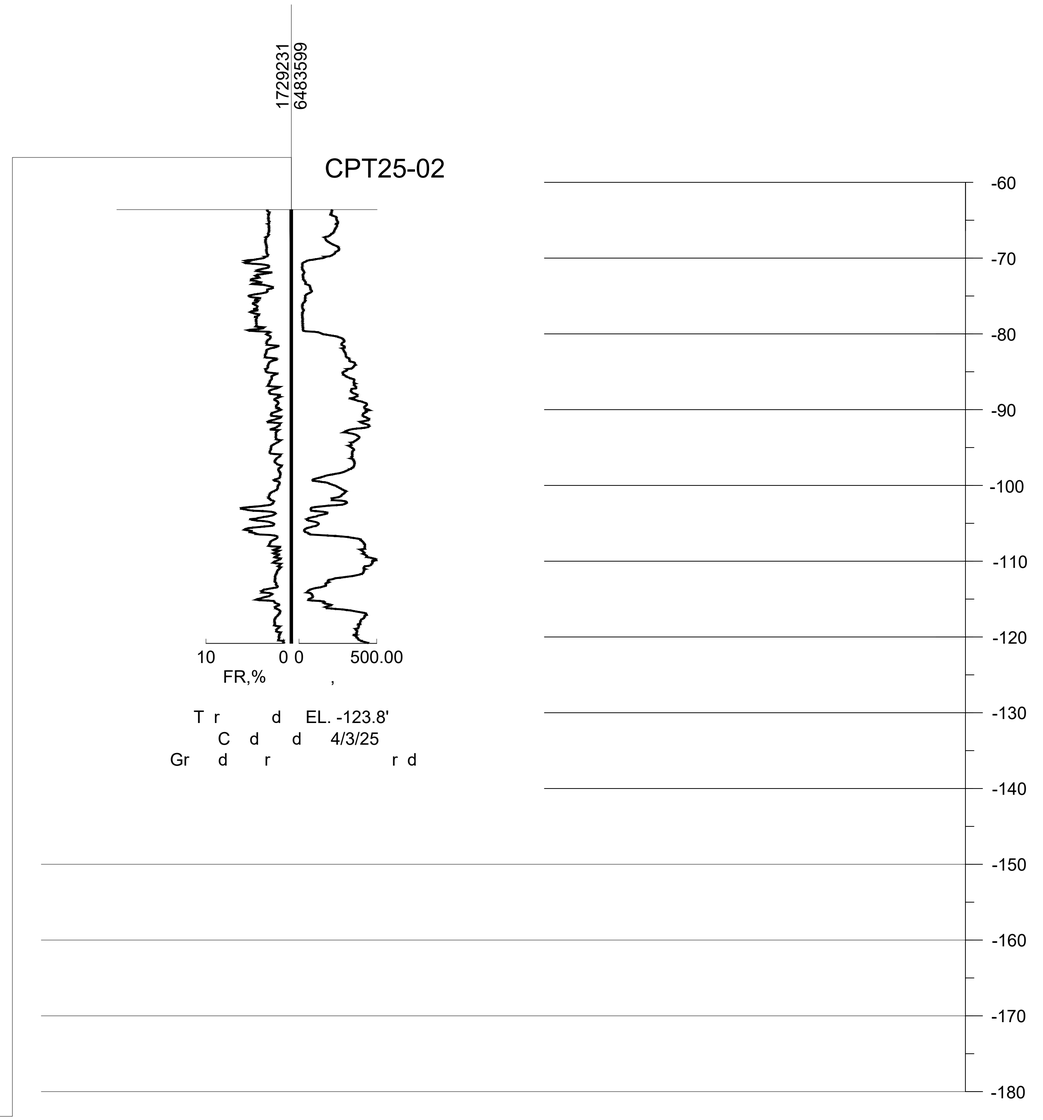

1RW-32
RW-32

LOTB

SCALE: 1" = 10'

SHEET ____ OF 400

NO.	DATE	DRAWN	REVISIONS -	CHK'D	APP'D
			NOT FOR CONSTRUCTION		

NO.	DATE	DRAWN	REVISIONS -	CHK'D	APP'D
			80% DESIGN		

Earth Mechanics, Inc.
Geotechnical and Earthquake Engineering

SCALE: 1" = 10'
DRAWN: X T
CHECKED: A dr K r
DESIGNED: A dr K r
ENGINEER / ARCHITECT

TERMINAL ISLAND GRADE SEPARATION

LOG OF TEST BORINGS - BRIDGE (2 5)

THE PORT OF LOS ANGELES
ENGINEERING DIVISION
425 S. PALOS VERDES STREET SAN PEDRO CA 90731-3309

DRAWING NUMBER 1-3497

SHEET NUMBER S-30

POLAPRO1_04/2023_BWD

N r	E	E ( )
1729328	6483509	15.3

NOTES:

THIS LOTB SHEET (BORING RECORD) WAS PREPARED IN ACCORDANCE WITH CALTRANS SOIL AND ROCK LOGGING, CLASSIFICATION AND PRESENTATION MANUAL (2022).

BASIS OF BEARINGS AND COORDINATES:

COORDINATES ARE BASED ON THE 1983 CALIFORNIA COORDINATE SYSTEM (CCS83) ZONE 5 .

COORDINATES SHOWN ROUNDED OFF TO THE NEAREST TENTH ARE APPROXIMATE.

BASIS OF ELEVATIONS:

ELEVATIONS ARE BASED ON NATIONAL GEODETIC VERTICAL DATUM (NGVD 29).

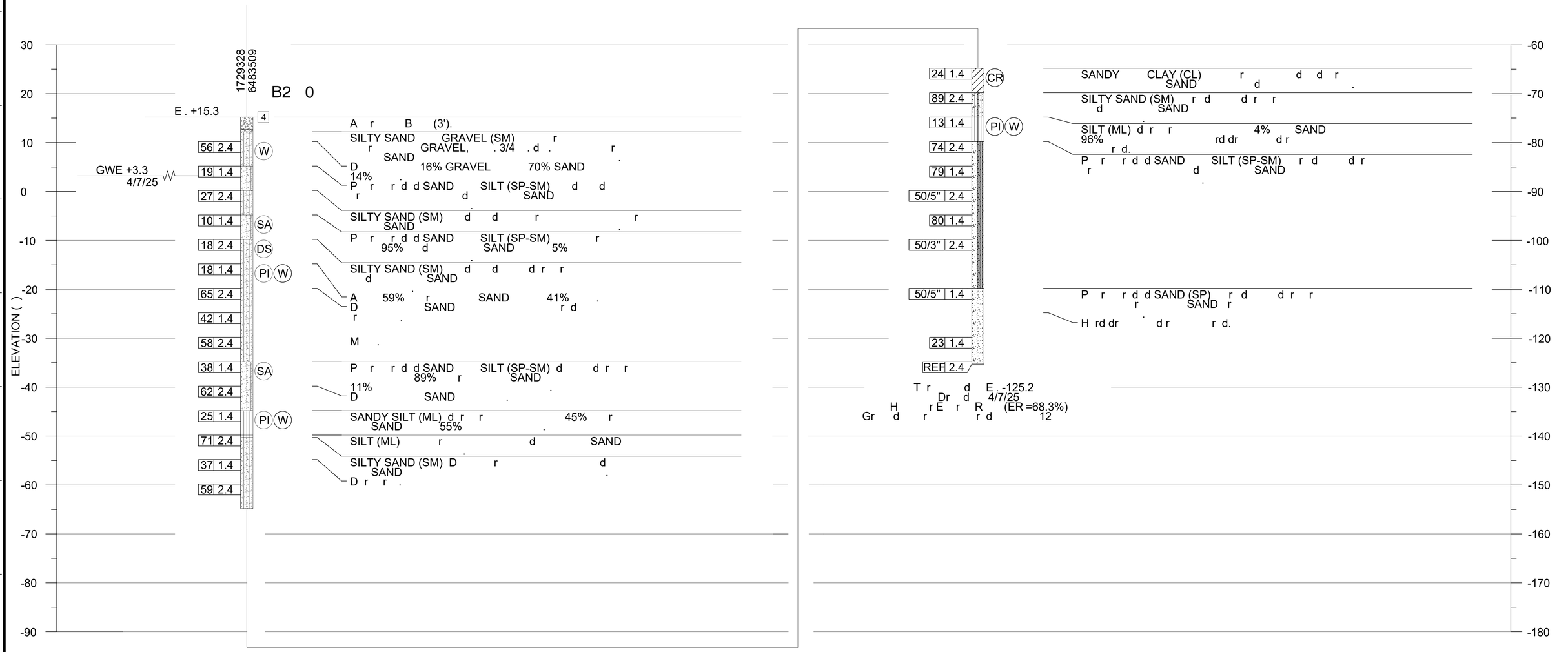

1RW-32
RW-32

LOTB
SCALE: 1" = 10'

SHEET ____ OF 400

NO.	DATE	DRAWN	REVISIONS -	CHK'D	APP'D
			NOT FOR CONSTRUCTION		

NO.	DATE	DRAWN	REVISIONS -	CHK'D	APP'D
			80% DESIGN		

Earth Mechanics, Inc.
Geotechnical and Earthquake Engineering

SCALE:	1" = 10'
DRAWN:	X T
CHECKED:	A dr K r
DESIGNED:	A dr K r

ENGINEER / ARCHITECT

TERMINAL ISLAND GRADE SEPARATION

LOG OF TEST BORINGS - BRIDGE (3 5)

THE PORT OF LOS ANGELES
ENGINEERING DIVISION
425 S. PALOS VERDES STREET SAN PEDRO CA 90731-3309

DRAWING NUMBER 1-3497

SHEET NUMBER S-31

POLAPRO1_040223_BWD

N r	E	E ( )
1729231	6483599	15.7

NOTES:

THIS LOTB SHEET (BORING RECORD) WAS PREPARED IN ACCORDANCE WITH CALTRANS SOIL AND ROCK LOGGING, CLASSIFICATION AND PRESENTATION MANUAL (2022).

BASIS OF BEARINGS AND COORDINATES:

COORDINATES ARE BASED ON THE 1983 CALIFORNIA COORDINATE SYSTEM (CCS83) ZONE 5 .

COORDINATES SHOWN ROUNDED OFF TO THE NEAREST TENTH ARE APPROXIMATE.

BASIS OF ELEVATIONS:

ELEVATIONS ARE BASED ON NATIONAL GEODETIC VERTICAL DATUM (NGVD 29).

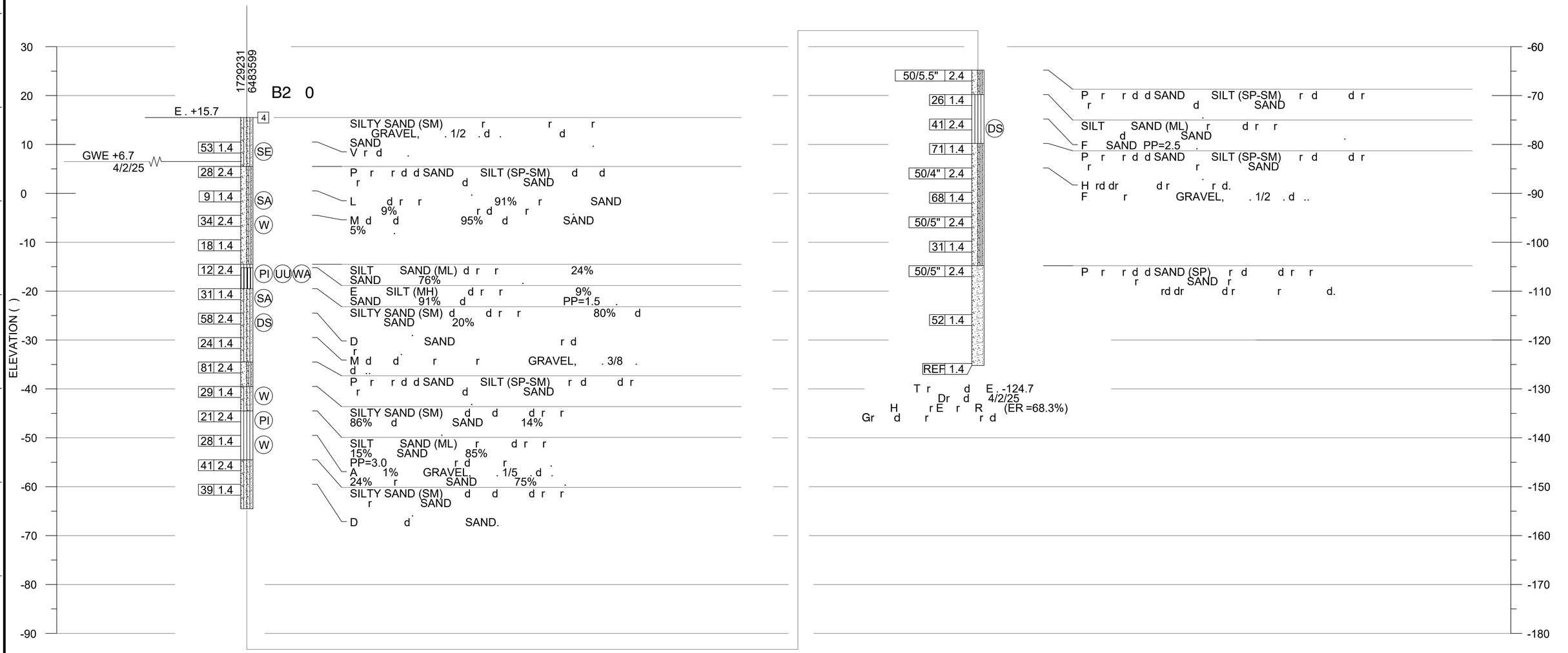

1RW-32
RW-32

LOTB

SCALE: 1" = 10'

SHEET ____ OF 400

NO.	DATE	DRAWN	REVISIONS -	CHK'D	APP'D
			NOT FOR CONSTRUCTION		

NO.	DATE	DRAWN	REVISIONS -	CHK'D	APP'D
			80% DESIGN		

Earth Mechanics, Inc.
Geotechnical and Earthquake Engineering

SCALE:	1" = 10'
DRAWN:	X T
CHECKED:	A dr K r
DESIGNED:	A dr K r

ENGINEER / ARCHITECT

TERMINAL ISLAND GRADE SEPARATION

LOG OF TEST BORINGS - BRIDGE (4 5)

THE PORT OF LOS ANGELES
ENGINEERING DIVISION
425 S. PALOS VERDES STREET SAN PEDRO CA 90731-3309

DRAWING NUMBER 1-3497

SHEET NUMBER S-32

POLAPRO1_042023_BWD

N r	E	E ( )
1729485	6483664	13.6

NOTES:

THIS LOTB SHEET (BORING RECORD) WAS PREPARED IN ACCORDANCE WITH CALTRANS SOIL AND ROCK LOGGING, CLASSIFICATION AND PRESENTATION MANUAL (2022).

BASIS OF BEARINGS AND COORDINATES:

COORDINATES ARE BASED ON THE 1983 CALIFORNIA COORDINATE SYSTEM (CCS83) ZONE 5 .

COORDINATES SHOWN ROUNDED OFF TO THE NEAREST TENTH ARE APPROXIMATE.

BASIS OF ELEVATIONS:

ELEVATIONS ARE BASED ON NATIONAL GEODETIC VERTICAL DATUM (NGVD 29).

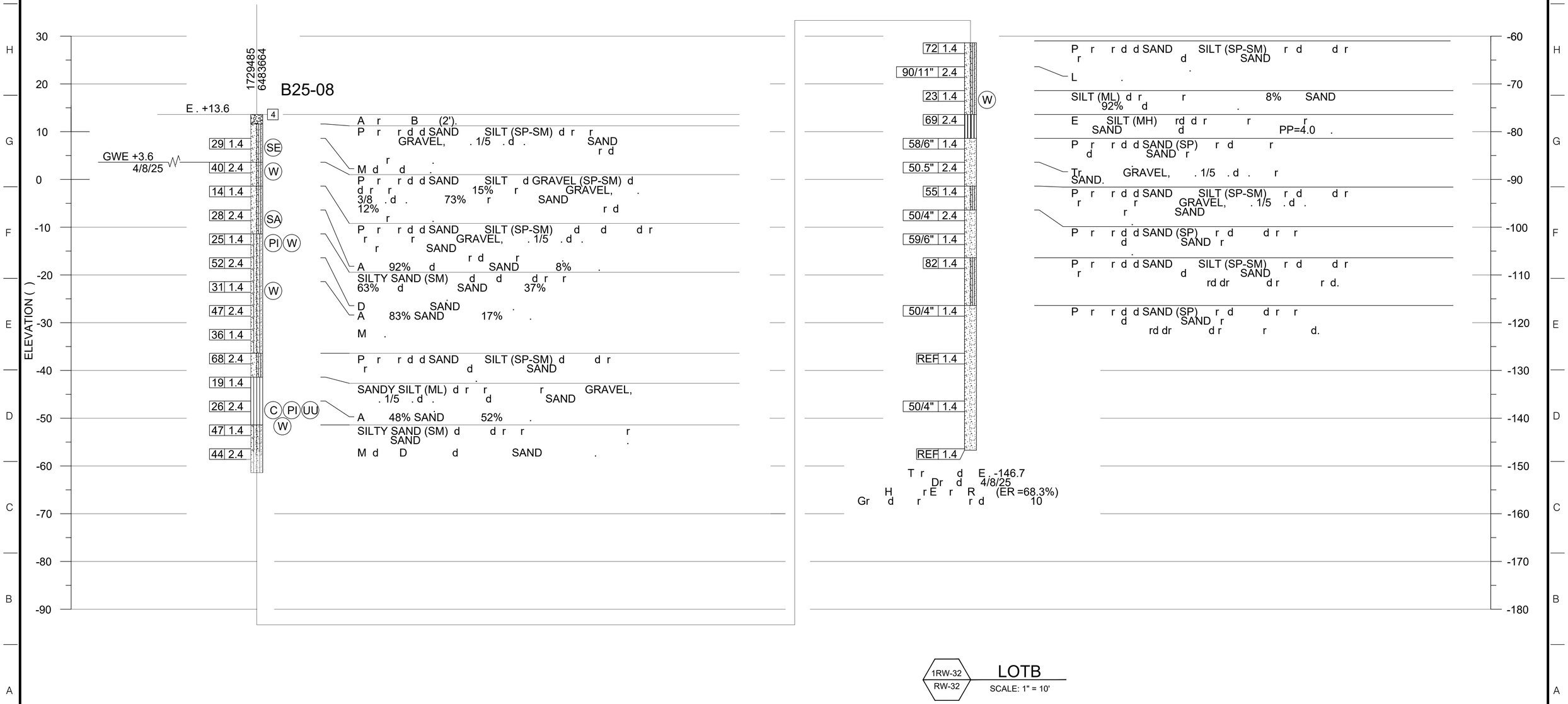

1RW-32
RW-32

LOTB

SCALE: 1" = 10'

SHEET ____ OF 400

NO.	DATE	DRAWN	REVISIONS -	CHK'D	APP'D
			NOT FOR CONSTRUCTION		

NO.	DATE	DRAWN	REVISIONS -	CHK'D	APP'D
			80% DESIGN		

Earth Mechanics, Inc.
Geotechnical and Earthquake Engineering

SCALE:	1" = 10'
DRAWN:	X T
CHECKED:	A dr K r
DESIGNED:	A dr K r

ENGINEER / ARCHITECT

TERMINAL ISLAND GRADE SEPARATION

LOG OF TEST BORINGS - BRIDGE (5 5)

THE PORT OF LOS ANGELES
ENGINEERING DIVISION
425 S. PALOS VERDES STREET SAN PEDRO CA 90731-3309

DRAWING NUMBER 1-3497

SHEET NUMBER S-33

POLAPROT_040223_BWD

INDEX TO STRUCTURAL PLANS

SHEET NO.	TITLE
RW-01	RETAINING WALL SITE PLAN
RW-02	RETAINING WALL NO. 417 PLAN & ELEVATION
RW-03	RETAINING WALL NO. 517 PLAN & ELEVATION
RW-04	RETAINING WALL NO. 619 PLAN & ELEVATION
RW-05	RETAINING WALL NO. 723 PLAN & ELEVATION NO. 1
RW-06	RETAINING WALL NO. 723 PLAN & ELEVATION NO. 2
RW-07	RETAINING WALL NO. 823 PLAN & ELEVATION NO. 1
RW-08	RETAINING WALL NO. 823 PLAN & ELEVATION NO. 2
RW-09	RETAINING WALL ELEVATIONS
RW-10	LIMITS OF EXCAVATION & BACKFILL NO. 1
RW-11	LIMITS OF EXCAVATION & BACKFILL NO. 2
RW-12	LIMITS OF EXCAVATION & BACKFILL NO. 3
RW-13	LIMITS OF EXCAVATION & BACKFILL NO. 4
RW-14	MECHANICALLY STABILIZED EMBANKMENT TYPICAL SECTION
RW-15	BARRIER SLAB DETAILS
RW-16	MECHANICALLY STABILIZED EMBANKMENT DETAIL NO. 1
RW-17	MECHANICALLY STABILIZED EMBANKMENT DETAIL NO. 2
RW-18	MECHANICALLY STABILIZED EMBANKMENT DETAIL NO. 3
RW-19	MECHANICALLY STABILIZED EMBANKMENT DETAIL NO. 4
RW-20	MECHANICALLY STABILIZED EMBANKMENT DETAIL NO. 5
RW-21	TYPE 5 WALL DETAILS
RW-22	DRAINAGE DETAILS NO. 1
RW-23	DRAINAGE DETAILS NO. 2
RW-24	DRAINAGE DETAILS NO. 3
RW-25	DRAINAGE DETAILS NO. 4
RW-26	DRAINAGE DETAILS NO. 5
RW-27	DRAINAGE INLET DETAILS NO. 1
RW-28	DRAINAGE INLET DETAILS NO. 2
RW-29	LIGHTING DETAILS
RW-30	FENCING DETAILS
RW-31	LOG OF TEST BORINGS LAYOUT
RW-32	LOG OF TEST BORINGS - RETAINING WALL (1 OF 6)
RW-33	LOG OF TEST BORINGS - RETAINING WALL (2 OF 6)
RW-34	LOG OF TEST BORINGS - RETAINING WALL (3 OF 6)
RW-35	LOG OF TEST BORINGS - RETAINING WALL (4 OF 6)
RW-36	LOG OF TEST BORINGS - RETAINING WALL (5 OF 6)
RW-37	LOG OF TEST BORINGS - RETAINING WALL (6 OF 6)

CALTRANS STANDARD PLANS 2024 EDITION

B0-3	BRIDGE DETAILS
B3-4A	RETAINING WALL TYPE 5 (CASE 1)
B3-5	RETAINING WALL DETAILS NO. 1
B11-52	CHAIN LINK RAILING TYPE 7
B11-81	CONCRETE BARRIER TYPE 842 DETAILS No. 1
B11-82	CONCRETE BARRIER TYPE 842 DETAILS No. 2
P18	CONCRETE PAVEMENT LANE SCHEMATICS AND ISOLATION JOINT SEAL

STANDARD PLAN SHEET NO.
DETAIL NO.

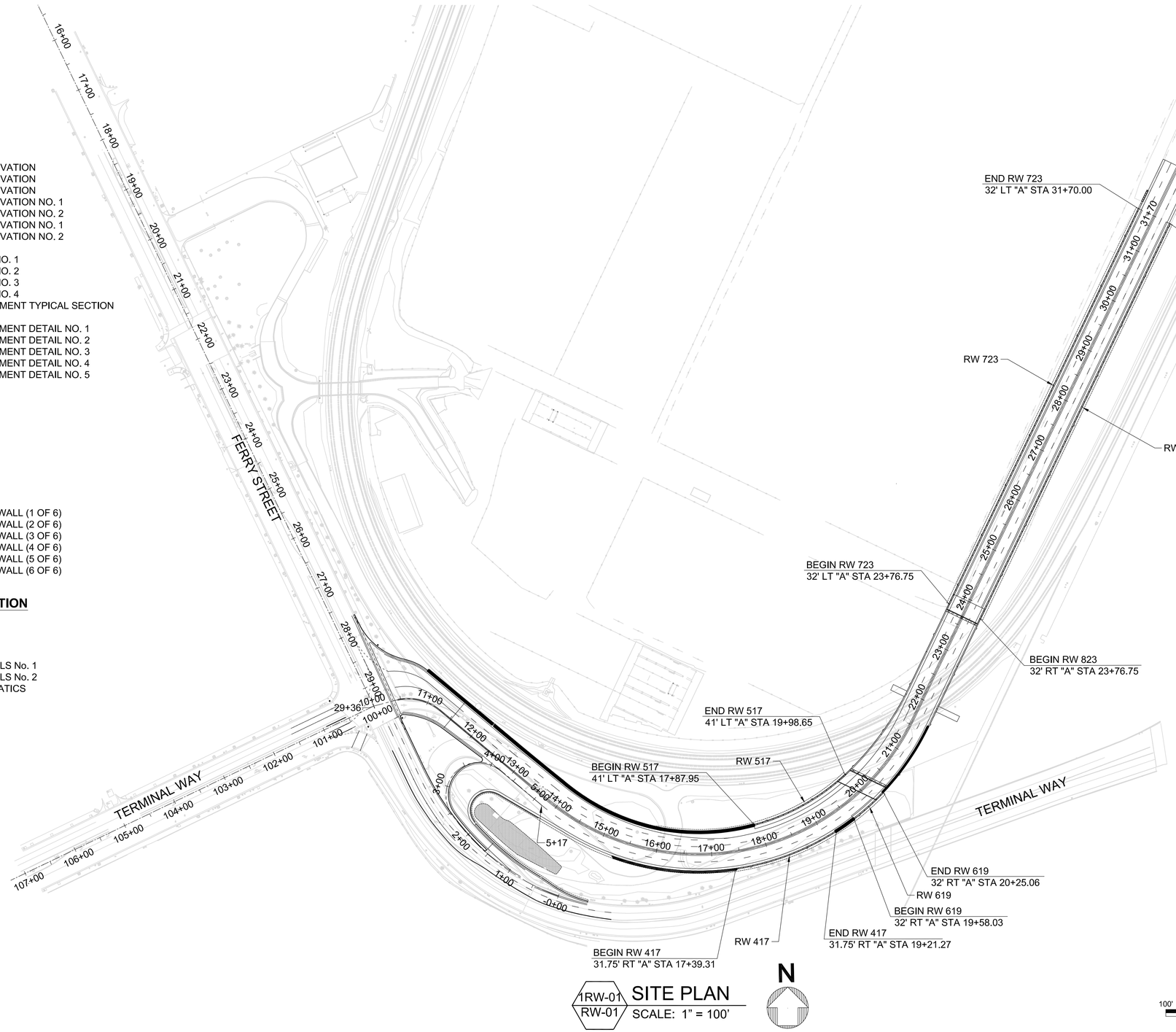

1RW-01 / RW-01 SITE PLAN
SCALE: 1" = 100'

100' 0' 100' 200'
SCALE: 1" = 100'

SHEET #### OF 400

NO.	DATE	DRAWN	REVISIONS -	CHK'D	APP'D
			NOT FOR CONSTRUCTION		

NO.	DATE	DRAWN	REVISIONS -	CHK'D	APP'D
			80% DESIGN		

Jacobs
2600 MICHELSON DRIVE, SUITE 500
IRVINE, CA 92612
T: (949) 224-7500
F: (949) 224-7501

SCALE:	AS SHOWN
DRAWN:	N. MORALES
CHECKED:	B. DENG
DESIGNED:	L. DIECKMANN
ENGINEER / ARCHITECT	B. DENG

TERMINAL ISLAND GRADE SEPARATION

RETAINING WALL SITE PLAN

THE PORT OF LOS ANGELES
ENGINEERING DIVISION
425 S. PALOS VERDES STREET SAN PEDRO CA 90731-3309

DRAWING NUMBER	SHEET NUMBER
1-3497	RW-01

C:\Users\kpope1\DC\ACCDocs\Jacobs\US CA_d3391901_POLA Terminal Island GS\Project Files\30 PROJECT DATA\PID\STRUCTURE\Drawings\1-3497 RW-01.dwg, 8/15/2025 12:52:11 PM
POLAPRO1_04-2023_BW0

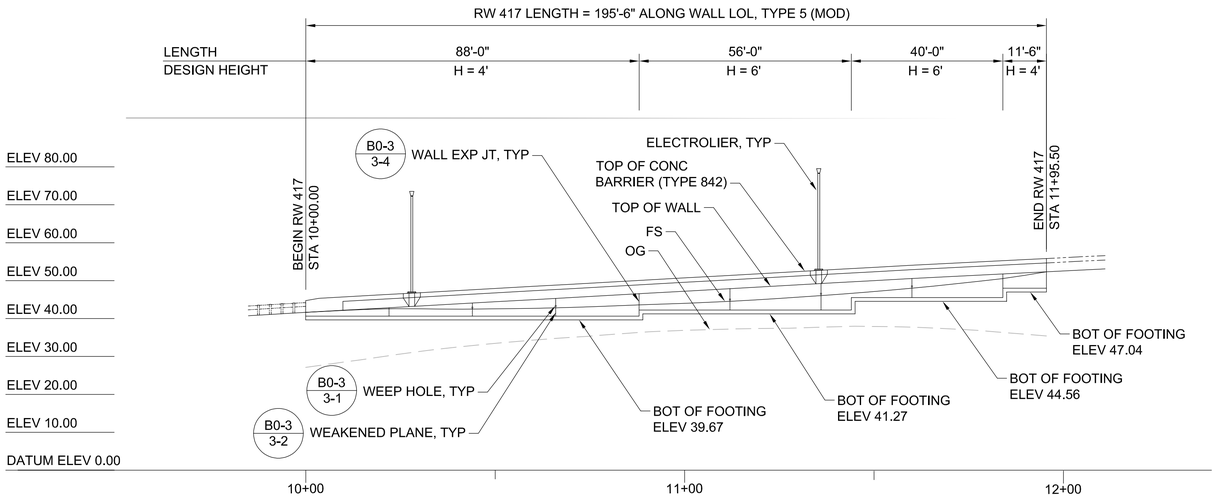

1RW-02 / RW-02 **DEVELOPED ELEVATION**
SCALE: 1"=20'

RW LOL STATION	TOP OF WALL	FG AT WALL FACE
10+00.00	41.95	41.96
10+25.00	43.06	42.48
10+50.00	44.46	42.59
10+75.00	45.86	43.17
11+00.00	47.26	44.10
11+25.00	48.65	44.78
11+50.00	50.05	47.16
11+75.00	51.36	49.69
11+95.50	52.36	52.36

NOTES

1. VERIFY EXISTING UTILITIES AND NOTIFY AGENCIES PRIOR TO ANY REMOVAL, RELOCATIONS OR NEW CONSTRUCTION. SEE ROADWAY PLANS FOR UTILITY DETAILS NOT SHOWN.
2. VERIFY CONTROLLING FIELD DIMENSIONS BEFORE ORDERING OR FABRICATING ANY MATERIAL.
3. FOR TYPICAL SECTION SEE SHEET RW-14.
4. FOR FACE OF WALL OFFSET, SEE 1RW-15.
5. FOR RETAINING WALL ELEVATION SEE TABLE ON SHEET RW-09.
6. FOR DRAINAGE SYSTEM AND DETAILS SEE SHEET RW-22.
7. FOR LIGHTING INFORMATION, SEE SHEET RW-29.

LEGEND

XX.X — INDICATES BOTTOM OF FOOTING ELEVATION

DENOTES ELECTROLIER, SEE NOTE 7

DENOTES PULL BOX

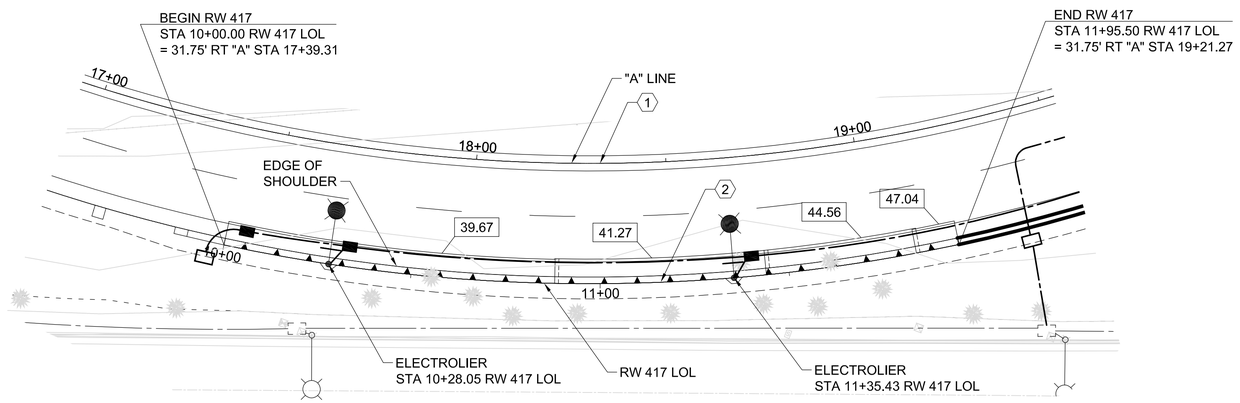

CURVE DATA				
⬡	R	△	L	T
1	430.00'	104°11'04"	781.91'	552.21'
2	461.75'	24°15'35"	195.50'	99.24'

2RW-02 / RW-02 **PLAN**
SCALE: 1"=20'

N

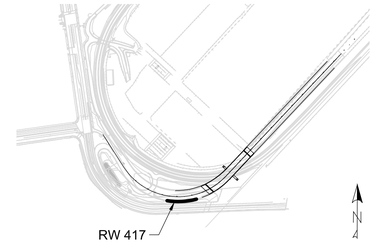

KEY MAP

20' 0' 20' 40'
SCALE: 1" = 20'

SHEET #### OF 400

NO.	DATE	DRAWN	REVISIONS -	CHK'D	APP'D
			NOT FOR CONSTRUCTION		

NO.	DATE	DRAWN	REVISIONS -	CHK'D	APP'D
			80% DESIGN		

Jacobs
300 NEW CHELSON DRIVE, SUITE 500
CA 90731-3309
T: (949) 224-7500
F: (949) 224-7501

SCALE:	AS SHOWN
DRAWN:	K. POPE
CHECKED:	B. DENG
DESIGNED:	L. DIECKMANN
ENGINEER / ARCHITECT	B. DENG

TERMINAL ISLAND GRADE SEPARATION

RETAINING WALL NO. 417 PLAN & ELEVATION

THE PORT OF LOS ANGELES
ENGINEERING DIVISION
425 S. PALOS VERDES STREET SAN PEDRO CA 90731-3309

DRAWING NUMBER: 1-3497
SHEET NUMBER: RW-02

C:\Users\kpope1\DC\ACCDocs\Jacobs\US CA_d3391901_POLA Terminal Island GS\Project Files\30 PROJECT DATA\PID\STRUCTURES\Drawings\1-3497 RW-02.dwg, 8/15/2025 12:55:10 PM
POLAPRO1_041020_BWD

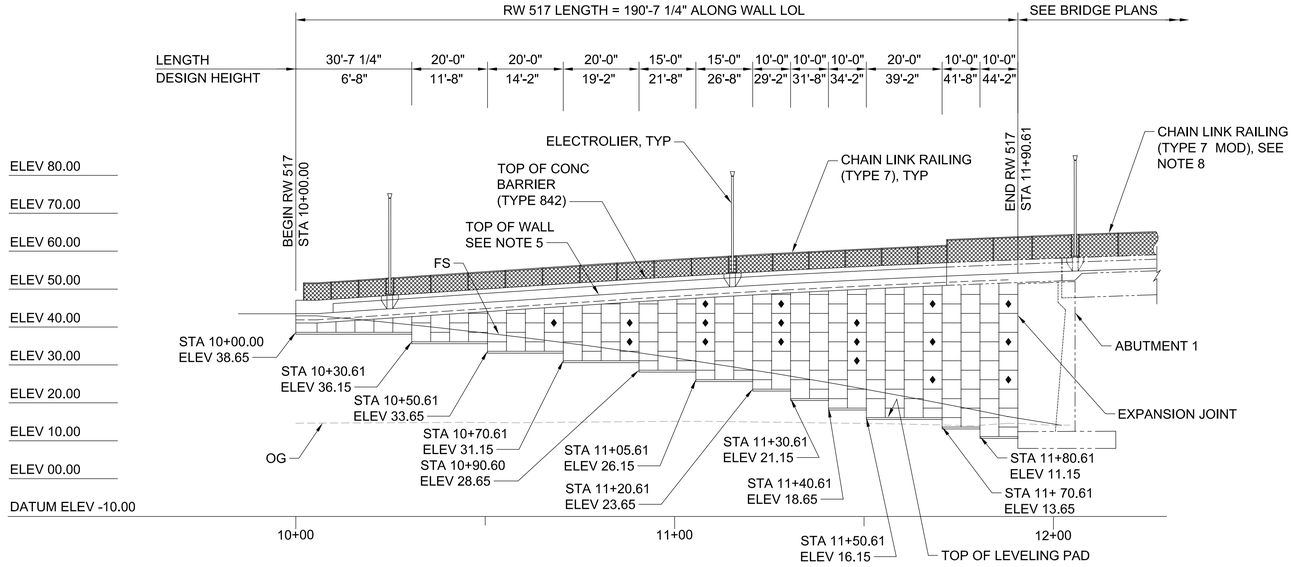

1RW-03 / RW-03 **MIRRORED DEVELOPED ELEVATION**
SCALE: 1"=20'

NOTES

1. VERIFY EXISTING UTILITIES AND NOTIFY AGENCIES PRIOR TO ANY REMOVAL, RELOCATIONS OR NEW CONSTRUCTION. SEE ROADWAY PLANS FOR UTILITY DETAILS NOT SHOWN.
2. VERIFY CONTROLLING FIELD DIMENSIONS BEFORE ORDERING OR FABRICATING ANY MATERIAL.
3. FOR TYPICAL SECTION SEE SHEET RW-14.
4. FOR FACE OF WALL OFFSET, SEE 1RW-15.
5. FOR RETAINING WALL ELEVATION SEE TABLE ON SHEET RW-09.
6. FOR DRAINAGE SYSTEM AND DETAILS SEE SHEET RW-22.
7. FOR LIGHTING INFORMATION, SEE SHEET RW-29.
8. FOR LIMITS OF CHAIN LINK RAILING (TYPE 7 MOD), SEE SHEET S-1.
9. FOR STRUCTURE APPROACH SLAB DETAILS ON MSE WALL AND BRIDGE, SEE RW-19 AND S-24.

LEGEND

- DENOTES ELECTROLIER, SEE NOTE 7
- DENOTES PULL BOX
- DENOTES INSPECTION WIRE

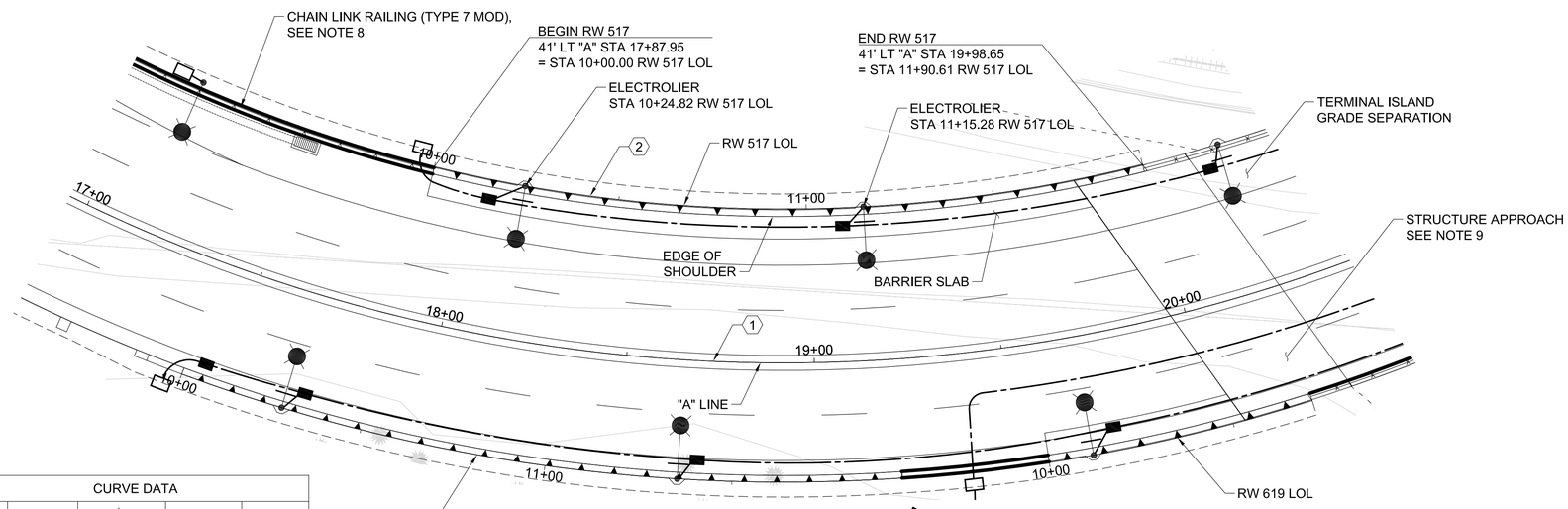

CURVE DATA				
⬡	R	△	L	T
1	430.00'	104°11'04"	781.91'	552.21'
2	389.00'	28°05'21"	190.71'	97.31'

2RW-03 / RW-03 **PLAN**
SCALE: 1"=20'

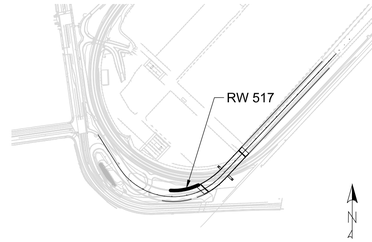

KEY MAP

20' 0' 20' 40'
SCALE: 1" = 20'

SHEET #### OF 400

NO.	DATE	DRAWN	REVISIONS -	CHK'D	APP'D
			NOT FOR CONSTRUCTION		

NO.	DATE	DRAWN	REVISIONS -	CHK'D	APP'D
			80% DESIGN		

Jacobs
2600 MICHELSON DRIVE, SUITE 500
IRVINE, CA 92612
T: (949) 224-7500
F: (949) 224-7501

SCALE:	AS SHOWN
DRAWN:	K. POPE
CHECKED:	B. DENG
DESIGNED:	L. DIECKMANN
ENGINEER / ARCHITECT	B. DENG

TERMINAL ISLAND GRADE SEPARATION

RETAINING WALL NO. 517 PLAN & ELEVATION

THE PORT OF LOS ANGELES
ENGINEERING DIVISION
425 S. PALOS VERDES STREET SAN PEDRO CA 90731-3309

DRAWING NUMBER	SHEET NUMBER
1-3497	RW-03

C:\Users\kpope1\DC\ACCDocs\Jacobs\US CA_d3391901_POLA Terminal Island GS\Project Files\30 PROJECT DATA\PID\STRUCTURE\Drawings\1-3497 RW-03.dwg, 8/15/2025 12:57:01 PM
POLAPROT_040320_BWD

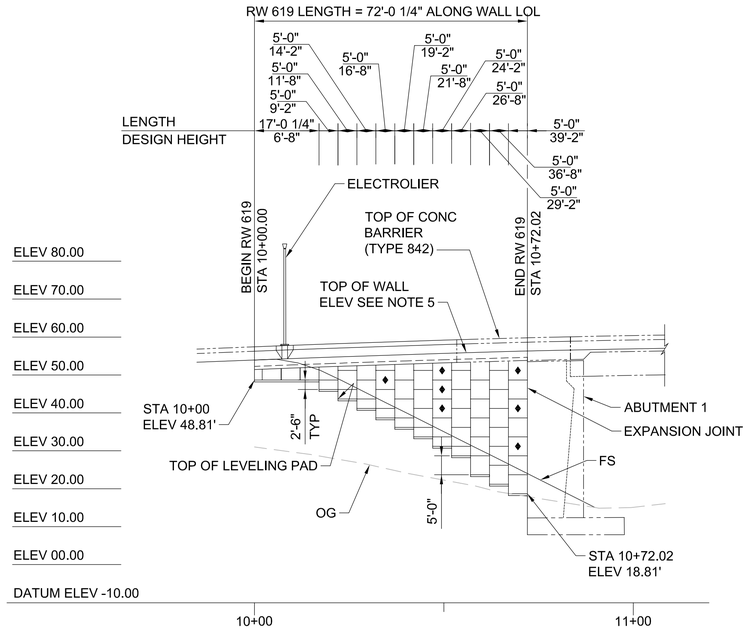

1RW-04 / RW-04 **DEVELOPED ELEVATION**
SCALE: 1"=20'

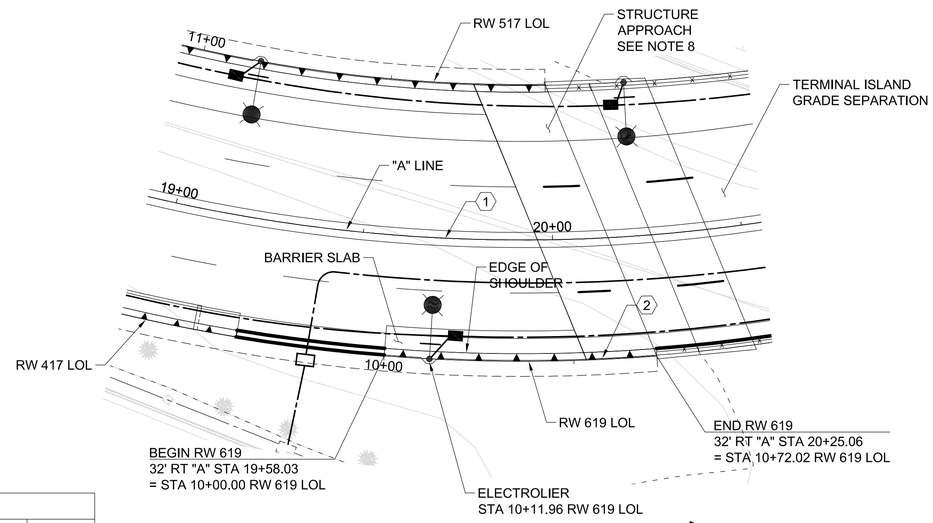

2RW-04 / RW-04 **PLAN**
SCALE: 1"=20'

CURVE DATA				
⬡	R	△	L	T
1	430.00'	104°11'04"	781.91'	552.21'
2	462.00'	08°55'54"	72.02'	36.08'

NOTES

1. VERIFY EXISTING UTILITIES AND NOTIFY AGENCIES PRIOR TO ANY REMOVAL, RELOCATIONS OR NEW CONSTRUCTION. SEE ROADWAY PLANS FOR UTILITY DETAILS NOT SHOWN.
2. VERIFY CONTROLLING FIELD DIMENSIONS BEFORE ORDERING OR FABRICATING ANY MATERIAL.
3. FOR TYPICAL SECTION SEE SHEET RW-14.
4. FOR FACE OF WALL OFFSET, SEE 1RW-15.
5. FOR RETAINING WALL ELEVATION SEE TABLE ON SHEET RW-09.
6. FOR DRAINAGE SYSTEM AND DETAILS SEE SHEET RW-22.
7. FOR LIGHTING INFORMATION, SEE SHEET RW-29.
8. FOR STRUCTURE APPROACH SLAB DETAILS ON MSE WALL AND BRIDGE, SEE RW-19 AND S-24.

LEGEND

- DENOTES ELECTROLIER, SEE NOTE 7
- DENOTES PULL BOX
- DENOTES INSPECTION WIRE

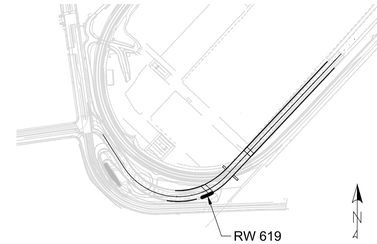

KEY MAP

20' 0'-0" 20' 40'
SCALE: 1" = 20'

SHEET #### OF 400

NO.	DATE	DRAWN	REVISIONS -	CHK'D	APP'D
			NOT FOR CONSTRUCTION		

NO.	DATE	DRAWN	REVISIONS -	CHK'D	APP'D
			80% DESIGN		

Jacobs
360 E. 2ND STREET, SUITE 600
LOS ANGELES, CA 90012
T: (949) 224-7500
F: (949) 224-7501

SCALE:	AS SHOWN
DRAWN:	K. POPE
CHECKED:	B. DENG
DESIGNED:	L. DIECKMANN
ENGINEER / ARCHITECT	B. DENG

TERMINAL ISLAND GRADE SEPARATION

RETAINING WALL NO. 619 PLAN & ELEVATION

THE PORT OF LOS ANGELES
ENGINEERING DIVISION
425 S. PALOS VERDES STREET SAN PEDRO CA 90731-3309

DRAWING NUMBER: 1-3497
SHEET NUMBER: RW-04

C:\Users\kpope1\DC\ACCDocs\Jacobs\US CA_d3391901_POLA Terminal Island GS\Project Files\30 PROJECT DATA\PID\STRUCTURES\Drawings\1-3497 RW-04.dwg, 8/15/2025 12:59:41 PM
POLAPROT_04/2021_BWD

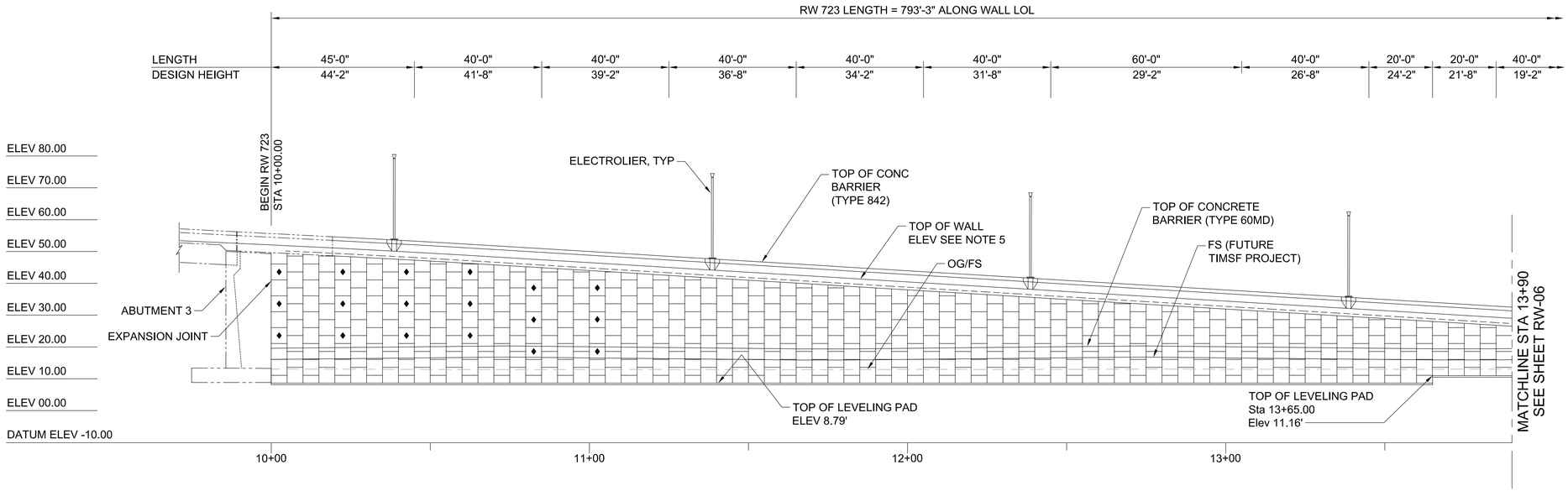

1RW-05 / RW-05 **MIRRORED ELEVATION**
SCALE: 1"=20'

NOTES

1. VERIFY EXISTING UTILITIES AND NOTIFY AGENCIES PRIOR TO ANY REMOVAL, RELOCATIONS OR NEW CONSTRUCTION. SEE ROADWAY PLANS FOR UTILITY DETAILS NOT SHOWN.
2. VERIFY CONTROLLING FIELD DIMENSIONS BEFORE ORDERING OR FABRICATING ANY MATERIAL.
3. FOR TYPICAL SECTION SEE SHEET RW-14.
4. FOR FACE OF WALL OFFSET, SEE 1RW-15.
5. FOR RETAINING WALL ELEVATION SEE TABLE ON SHEET RW-09.
6. FOR DRAINAGE SYSTEM AND DETAILS SEE SHEET RW-22.
7. FOR LIGHTING INFORMATION, SEE SHEET RW-29.
8. FOR CONCRETE BARRIER (TYPE 60MD) DETAILS, SEE SHEET RW-30.
9. FOR STRUCTURE APPROACH SLAB DETAILS ON MSE WALL AND BRIDGE, SEE RW-19 AND S-24.

LEGEND

- DENOTES ELECTROLIER, SEE NOTE 7
- DENOTES PULL BOX
- DENOTES INSPECTION WIRE

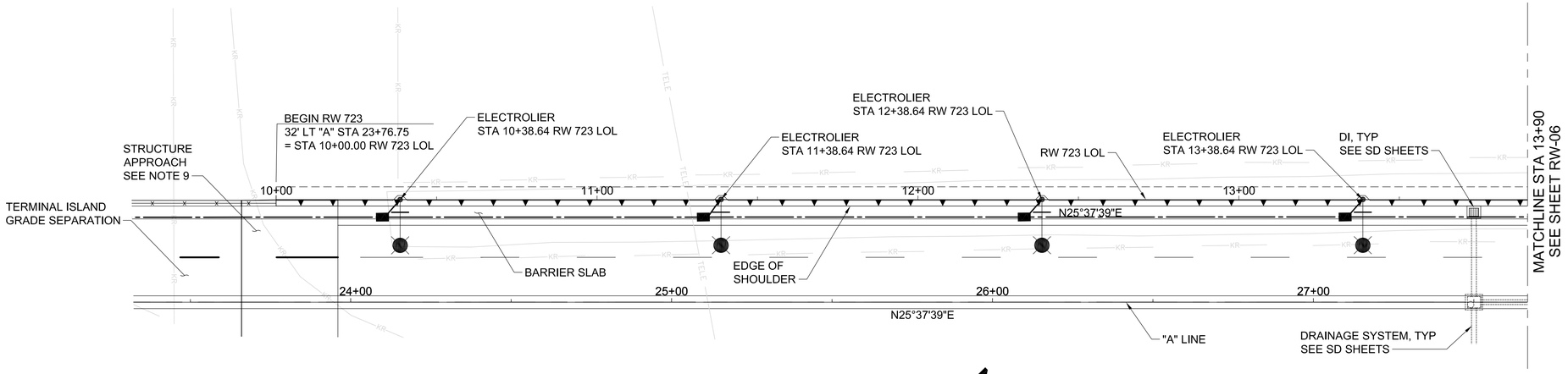

2RW-05 / RW-05 **PLAN**
SCALE: 1"=20'

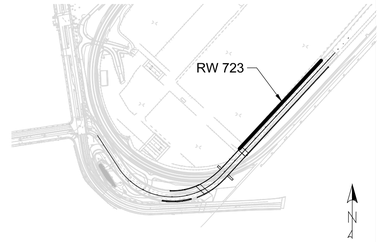

KEY MAP

20' 0' 20' 40'
SCALE: 1" = 20'

SHEET ---- OF 400

NO.	DATE	DRAWN	REVISIONS -	CHK'D	APP'D
			NOT FOR CONSTRUCTION		

NO.	DATE	DRAWN	REVISIONS -	CHK'D	APP'D
			80% DESIGN		

Jacobs
3600 MICHELSON DRIVE, SUITE 500
IRVINE, CA 92612
P: (949) 224-7500
F: (949) 224-7501

SCALE:	AS SHOWN
DRAWN:	K. POPE
CHECKED:	B. DENG
DESIGNED:	L. DIECKMANN
ENGINEER / ARCHITECT	B. DENG

TERMINAL ISLAND GRADE SEPARATION

RETAINING WALL NO. 723 PLAN & ELEVATION NO. 1

THE PORT OF LOS ANGELES
ENGINEERING DIVISION
425 S. PALOS VERDES STREET SAN PEDRO CA 90731-3309

DRAWING NUMBER	SHEET NUMBER
1-3497	RW-05

C:\Users\kpope1\DC\ACCDocs\Jacobs\US CA_d3391901_POLA Terminal Island GS\Project Files\30 PROJECT DATA\PID\STRUCTURES\Drawings\1-3497 RW-05.dwg, 8/15/2025 1:02:31 PM
POLAPRO1_041020_BWD

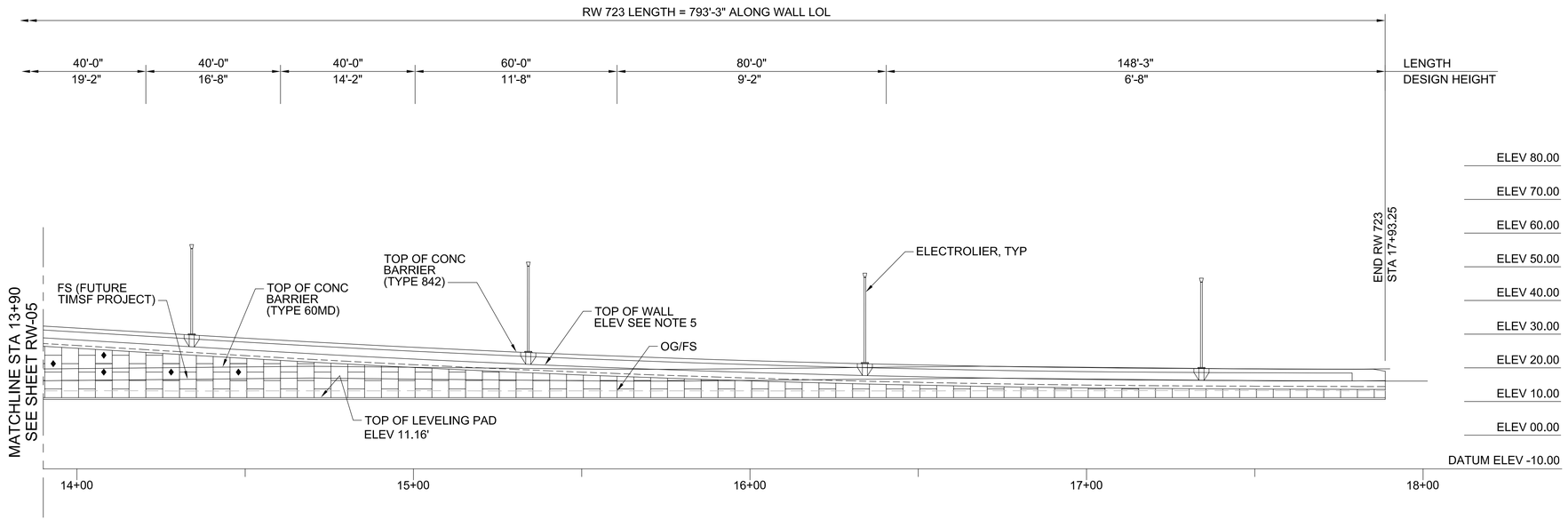

1RW-06 / RW-06 MIRRORED ELEVATION
SCALE: 1"=20'

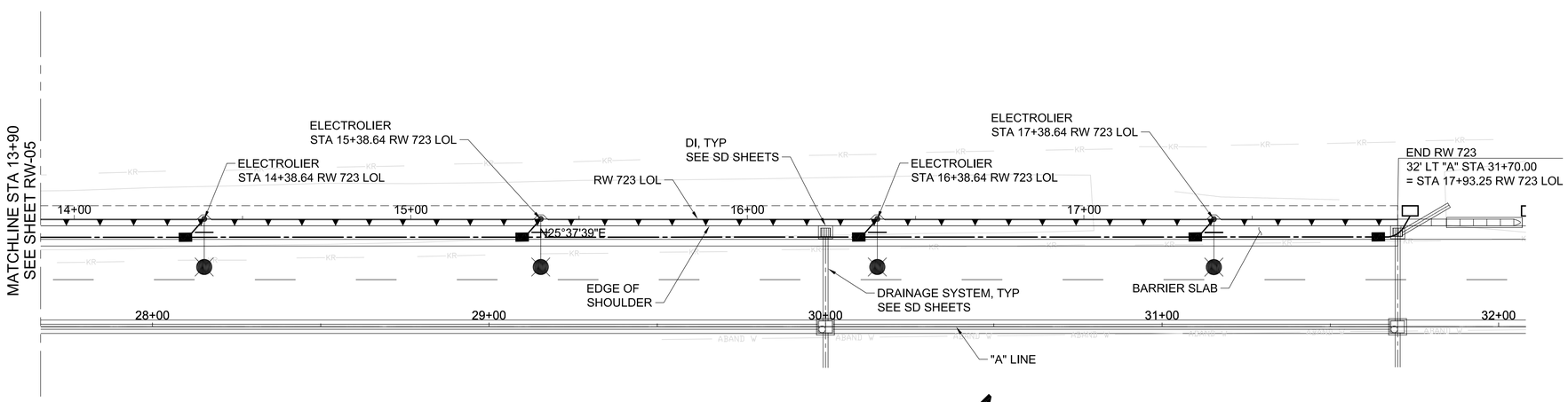

2RW-06 / RW-06 PLAN
SCALE: 1"=20'

NOTES

1. VERIFY EXISTING UTILITIES AND NOTIFY AGENCIES PRIOR TO ANY REMOVAL, RELOCATIONS OR NEW CONSTRUCTION. SEE ROADWAY PLANS FOR UTILITY DETAILS NOT SHOWN.
2. VERIFY CONTROLLING FIELD DIMENSIONS BEFORE ORDERING OR FABRICATING ANY MATERIAL.
3. FOR TYPICAL SECTION SEE SHEET RW-14.
4. FOR FACE OF WALL OFFSET, SEE 1 RW-15
5. FOR RETAINING WALL ELEVATION SEE TABLE ON SHEET RW-09.
6. FOR DRAINAGE SYSTEM AND DETAILS SEE SHEET RW-22.
7. FOR LIGHTING INFORMATION, SEE SHEET RW-29.
8. FOR CONCRETE BARRIER (TYPE 60MD) DETAILS, SEE SHEET RW-30.

LEGEND

DENOTES ELECTROLIER, SEE NOTE 7

DENOTES PULL BOX

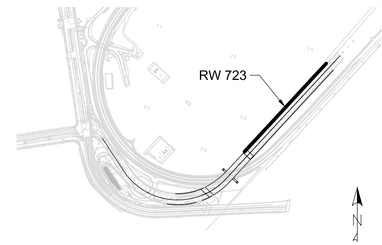

KEY MAP

20' 0' 20' 40'
SCALE: 1" = 20'

SHEET ---- OF 400

NO.	DATE	DRAWN	REVISIONS -	CHK'D	APP'D
			NOT FOR CONSTRUCTION		

NO.	DATE	DRAWN	REVISIONS -	CHK'D	APP'D
			80% DESIGN		

Jacobs
2600 MICHELSON DRIVE, SUITE 500
IRVINE, CA 92612
T: (949) 224-7500
F: (949) 224-7501

SCALE: AS SHOWN
DRAWN: K. POPE
CHECKED: B. DENG
DESIGNED: L. DIECKMANN
ENGINEER / ARCHITECT
B. DENG

TERMINAL ISLAND GRADE SEPARATION

RETAINING WALL NO. 723 PLAN & ELEVATION NO. 2

THE PORT OF LOS ANGELES
ENGINEERING DIVISION
425 S. PALOS VERDES STREET SAN PEDRO CA 90731-3309

DRAWING NUMBER 1-3497
SHEET NUMBER RW-06

C:\Users\kpope1\DC\ACCDocs\Jacobs\US CA_d3391901_POLA Terminal Island GS\Project Files\30 PROJECT DATA\PID\STRUCTURE\Drawings\1-3497 RW-06.dwg, 8/15/2025 1:06:01 PM

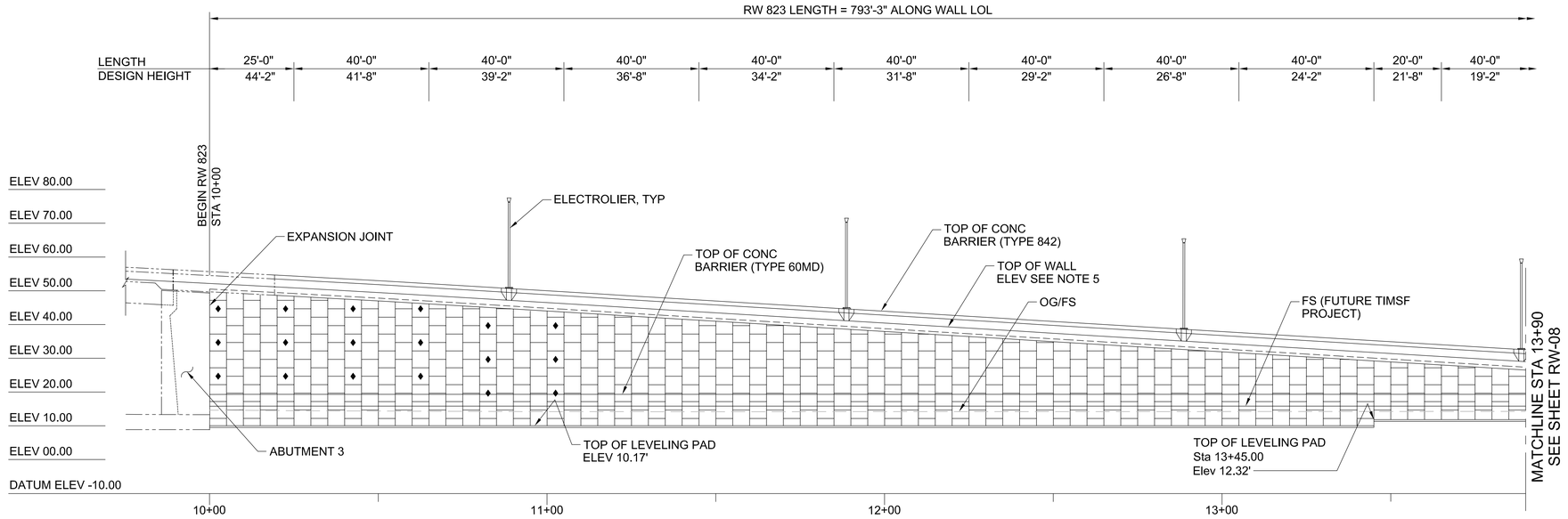

1RW-07 / RW-07 **ELEVATION**
SCALE: 1"=20'

NOTES

1. VERIFY EXISTING UTILITIES AND NOTIFY AGENCIES PRIOR TO ANY REMOVAL, RELOCATIONS OR NEW CONSTRUCTION. SEE ROADWAY PLANS FOR UTILITY DETAILS NOT SHOWN.
2. VERIFY CONTROLLING FIELD DIMENSIONS BEFORE ORDERING OR FABRICATING ANY MATERIAL.
3. FOR TYPICAL SECTION SEE SHEET RW-14.
4. FOR FACE OF WALL OFFSET, SEE 1 RW-15.
5. FOR RETAINING WALL ELEVATION SEE TABLE ON SHEET RW-09.
6. FOR DRAINAGE SYSTEM AND DETAILS SEE SHEET RW-22.
7. FOR LIGHTING INFORMATION, SEE SHEET RW-29.
8. FOR CONCRETE BARRIER (TYPE 60MD) DETAILS, SEE SHEET RW-30.
9. FOR STRUCTURE APPROACH SLAB DETAILS ON MSE WALL AND BRIDGE, SEE RW-19 AND S-24.

LEGEND

- DENOTES ELECTROLIER, SEE NOTE 7
- DENOTES PULL BOX
- DENOTES INSPECTION WIRE

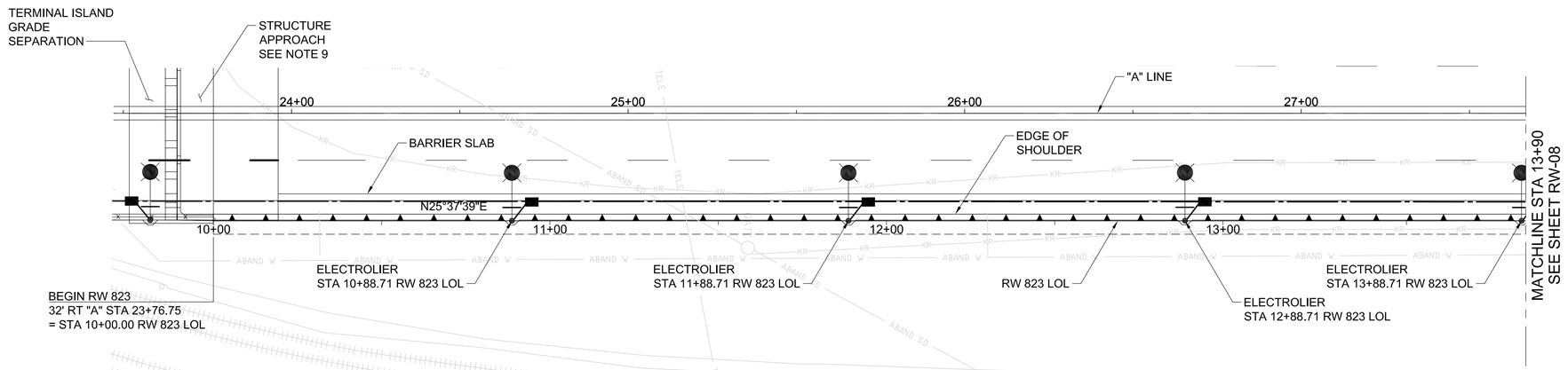

2RW-07 / RW-07 **PLAN**
SCALE: 1"=20'

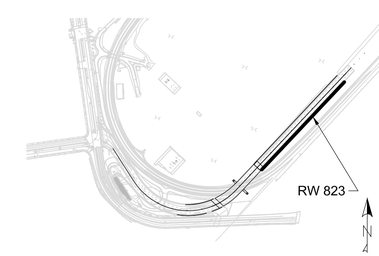

KEY MAP

20' 0' 20' 40'
SCALE: 1" = 20'

SHEET ---- OF 400

NO.	DATE	DRAWN	REVISIONS -	CHK'D	APP'D	NO.	DATE	DRAWN	REVISIONS -	CHK'D	APP'D
			NOT FOR CONSTRUCTION						80% DESIGN		

Jacobs
2600 MICHELSON DRIVE, SUITE 500
IRVINE, CA 92612
T: (949) 224-7500
F: (949) 224-7501

SCALE: AS SHOWN
DRAWN: K. POPE
CHECKED: B. DENG
DESIGNED: L. DIECKMANN
ENGINEER / ARCHITECT
B. DENG

TERMINAL ISLAND GRADE SEPARATION

RETAINING WALL NO. 823 PLAN & ELEVATION NO. 1

THE PORT OF LOS ANGELES
ENGINEERING DIVISION
425 S. PALOS VERDES STREET SAN PEDRO CA 90731-3309

DRAWING NUMBER 1-3497
SHEET NUMBER RW-07

C:\Users\kpope1\DC\ACCDocs\Jacobs\US CA_d3391901_POLA Terminal Island GS\Project Files\30 PROJECT DATA\PID\STRUCTURE\Drawings\1-3497 RW-07.dwg, 8/15/2025 1:10:28 PM

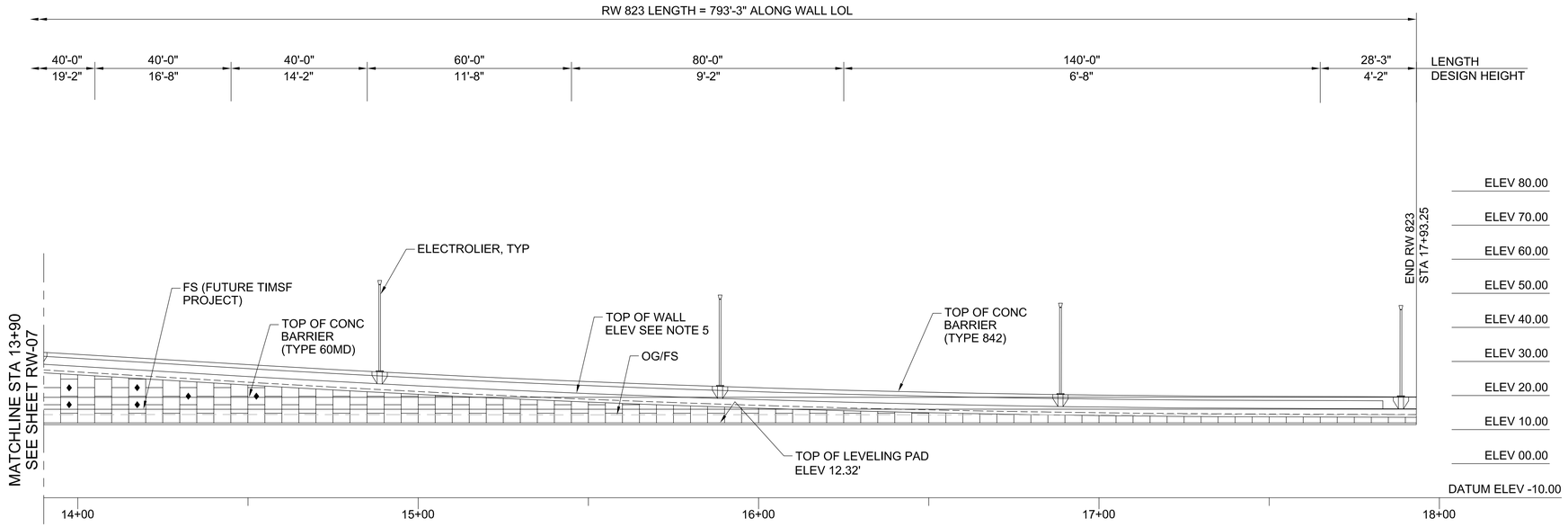

1RW-08 / RW-08 **ELEVATION**
SCALE: 1"=20'

NOTES

1. VERIFY EXISTING UTILITIES AND NOTIFY AGENCIES PRIOR TO ANY REMOVAL, RELOCATIONS OR NEW CONSTRUCTION. SEE ROADWAY PLANS FOR UTILITY DETAILS NOT SHOWN.
2. VERIFY CONTROLLING FIELD DIMENSIONS BEFORE ORDERING OR FABRICATING ANY MATERIAL.
3. FOR TYPICAL SECTION SEE SHEET RW-14.
4. FOR FACE OF WALL OFFSET, SEE 1RW-15.
5. FOR RETAINING WALL ELEVATION SEE TABLE ON SHEET RW-09.
6. FOR DRAINAGE SYSTEM AND DETAILS SEE SHEET RW-22.
7. FOR LIGHTING INFORMATION, SEE SHEET RW-29.
8. FOR CONCRETE BARRIER (TYPE60MD) DETAILS, SEE SHEET RW-30.

LEGEND

- DENOTES ELECTROLIER, SEE NOTE 7
- DENOTES PULL BOX
- DENOTES INSPECTION WIRE

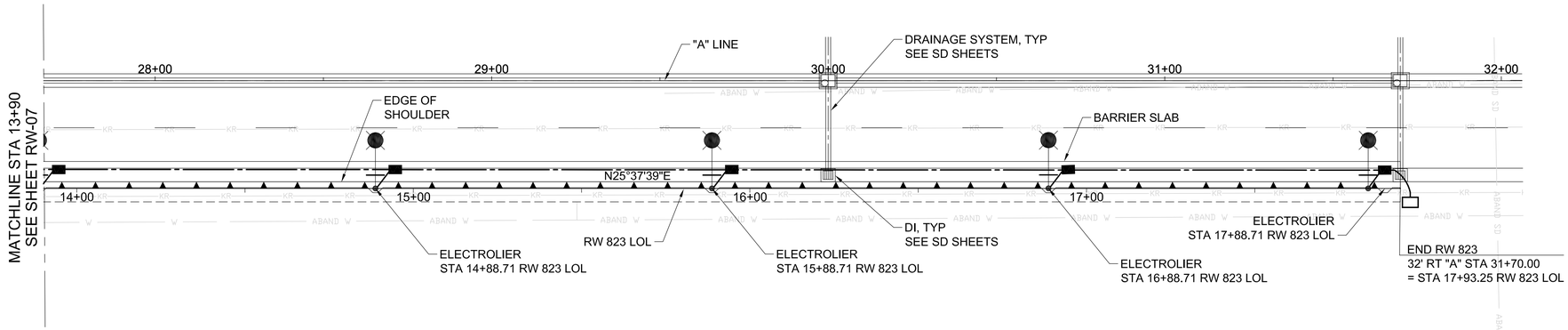

2RW-08 / RW-08 **PLAN**
SCALE: 1"=20'

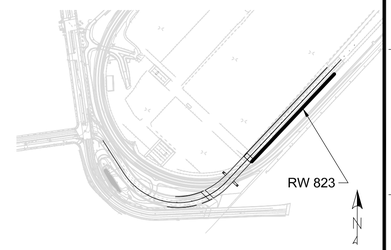

KEY MAP

20' 0' 20' 40'
SCALE: 1" = 20'

SHEET ____ OF 400

NO.	DATE	DRAWN	REVISIONS -	CHK'D	APP'D
			NOT FOR CONSTRUCTION		

NO.	DATE	DRAWN	REVISIONS -	CHK'D	APP'D
			80% DESIGN		

Jacobs
2600 MICHELSON DRIVE, SUITE 500
IRVINE, CA 92612
P: (949) 224-7500
F: (949) 224-7501

SCALE:	AS SHOWN
DRAWN:	K. POPE
CHECKED:	B. DENG
DESIGNED:	L. DIECKMANN
ENGINEER / ARCHITECT	B. DENG

TERMINAL ISLAND GRADE SEPARATION

RETAINING WALL NO. 823 PLAN & ELEVATION NO. 2

THE PORT OF LOS ANGELES
ENGINEERING DIVISION
425 S. PALOS VERDES STREET SAN PEDRO CA 90731-3309

DRAWING NUMBER	SHEET NUMBER
1-3497	RW-08

C:\Users\kpope1\DC\ACCDocs\Jacobs\US CA_d3391901_POLA Terminal Island GS\Project Files\30 PROJECT DATA\PID\STRUCTURE\Drawings\1-3497 RW-08.dwg, 8/15/2025 1:13:14 PM
POLAPRO1_041020_BWD

WELDED WIRE MAT SCHEDULE (LOADING CASE 1)

MAX DESIGN HEIGHT (FT)	6'-8"	9'-2"	11'-8"	14'-2"	16'-8"	19'-2"	21'-8"	24'-2"	26'-8"	29'-2"	31'-8"	34'-2"	36'-8"	39'-2"	41'-8"	44'-2"
SOIL REINF. LENGTH, L (FT)*	8'-0"	8'-0"	8'-0"	10'-0"	12'-0"	14'-0"	16'-0"	17'-0"	19'-0"	20'-0"	22'-0"	24'-0"	25'-0"	28'-0"	29'-0"	32'-0"
MIN BASE WIDTH, BW (FT)	9'-6"	9'-6"	9'-6"	11'-6"	13'-6"	15'-6"	17'-6"	18'-6"	20'-6"	21'-6"	23'-6"	25'-6"	26'-6"	29'-6"	30'-6"	33'-6"
TOP LEVELS OF MESH OVER OVER	TOP 4-W15xW15 @ 6 BOT. 4-W15xW15 @ 6	TOP 4-W15xW15 @ 6 1 OF 4-W15xW15 @ 6 BOT. 4-W15xW15 @ 6	TOP 4-W15xW15 @ 6 2 OF 4-W15xW15 @ 6 BOT. 4-W20xW15 @ 9	TOP 4-W15xW15 @ 6 3 OF 4-W15xW15 @ 6 BOT. 4-W20xW15 @ 9	TOP 4-W15xW15 @ 6 3 OF 4-W15xW15 @ 6 1 OF 4-W20xW15 @ 9 BOT. 4-W20xW15 @ 9	TOP 4-W15xW15 @ 6 4 OF 4-W15xW15 @ 6 1 OF 4-W20xW15 @ 9 BOT. 4-W20xW15 @ 9	TOP 4-W15xW15 @ 6 4 OF 4-W15xW15 @ 18 2 OF 4-W20xW15 @ 24 BOT. 4-W20xW15 @ 24	TOP 4-W15xW15 @ 6 4 OF 4-W15xW15 @ 18 3 OF 4-W20xW15 @ 24 BOT. 4-W20xW15 @ 24	TOP 4-W15xW15 @ 6 4 OF 4-W15xW15 @ 18 3 OF 4-W20xW15 @ 24 1 OF 6-W25xW15 @ 24 BOT. 6-W25xW15 @ 24	TOP 4-W15xW15 @ 6 4 OF 4-W15xW15 @ 18 4 OF 4-W15xW15 @ 18 2 OF 6-W25xW15 @ 24 BOT. 6-W25xW15 @ 24	TOP 4-W15xW15 @ 6 4 OF 4-W15xW15 @ 18 4 OF 4-W20xW15 @ 24 2 OF 6-W25xW15 @ 30 BOT. 6-W25xW15 @ 30	TOP 4-W15xW15 @ 18 4 OF 4-W15xW15 @ 18 4 OF 4-W20xW15 @ 24 3 OF 6-W25xW15 @ 30 BOT. 6-W25xW15 @ 30	TOP 4-W15xW15 @ 18 4 OF 4-W15xW15 @ 18 4 OF 4-W20xW15 @ 24 4 OF 6-W25xW15 @ 30 BOT. 6-W25xW15 @ 30	TOP 4-W15xW15 @ 18 4 OF 4-W15xW15 @ 18 5 OF 4-W20xW15 @ 24 4 OF 6-W25xW15 @ 30 BOT. 6-W25xW15 @ 30	TOP 4-W15xW15 @ 18 4 OF 4-W15xW15 @ 18 5 OF 4-W20xW15 @ 24 5 OF 6-W25xW15 @ 30 BOT. 6-W25xW15 @ 30	TOP 4-W15xW15 @ 18 4 OF 4-W15xW15 @ 18 5 OF 4-W20xW15 @ 24 6 OF 6-W25xW15 @ 30 BOT. 6-W25xW15 @ 30

NOTE:

* TOP TWO (2) LAYERS OF MESH ONLY. OTHER (OVER) LAYERS OF MESH SHALL HAVE SOIL REINFORCEMENT LENGTH EQUAL TO THE BASE WIDTH DIMENSION (BW)

RETAINING WALL RW 517 ELEVATIONS

RW 517 LOL STA	TOP OF WALL ELEV	FG ELEV
10+00.00	43.57'	43.25'
10+10.00	43.87'	42.43'
10+20.00	44.53'	41.56'
10+30.00	45.20'	40.70'
10+40.00	45.86'	39.61'
10+50.00	46.52'	38.51'
10+60.00	47.19'	37.30'
10+70.00	47.80'	36.08'
10+80.00	48.51'	34.74'
10+90.00	49.16'	33.39'
11+00.00	49.78'	31.91'
11+10.00	50.38'	30.41'
11+20.00	50.95'	28.83'
11+30.00	51.49'	27.23'
11+40.00	52.01'	25.50'
11+50.00	52.47'	23.75'
11+60.00	52.97'	21.89'
11+70.00	53.38'	20.02'
11+80.00	53.83'	18.06'
11+90.00	54.14'	16.08'
11+90.61	54.24'	15.96'

RETAINING WALL RW 619 ELEVATIONS

RW 619 LOL STA	TOP OF WALL ELEV	FG ELEV
10+00.00	54.07'	54.06'
10+10.00	54.45'	54.13'
10+20.00	54.82'	49.41'
10+30.00	55.17'	44.69'
10+40.00	55.50'	39.97'
10+50.00	55.82'	35.26'
10+60.00	56.10'	30.16'
10+70.00	56.38'	25.15'
10+72.02	56.44'	24.14'

RETAINING WALL RW 723 ELEVATIONS

RW 723 LOL STA	TOP OF WALL ELEV	FG ELEV
10+00.00	52.22'	13.19'
10+10.00	51.74'	13.18'
10+20.00	51.25'	13.17'
10+30.00	50.74'	13.14'
10+40.00	50.21'	13.11'
10+50.00	49.65'	13.09'
10+60.00	49.08'	13.08'
10+70.00	48.48'	13.06'
10+80.00	47.88'	13.05'
10+90.00	47.27'	13.08'
11+00.00	46.67'	13.10'
11+10.00	46.06'	13.09'
11+20.00	45.46'	13.07'
11+30.00	44.85'	13.06'
11+40.00	44.25'	13.04'
11+50.00	43.64'	13.02'
11+60.00	43.04'	13.04'
11+70.00	42.43'	13.03'
11+80.00	41.83'	13.07'
11+90.00	41.22'	13.10'
12+00.00	40.62'	13.11'
12+10.00	40.01'	13.11'
12+20.00	39.40'	13.09'
12+30.00	38.80'	13.10'
12+40.00	38.19'	13.11'
12+50.00	37.59'	13.12'
12+60.00	36.99'	13.15'
12+70.00	36.38'	13.18'
12+80.00	35.79'	13.19'
12+90.00	35.18'	13.17'
13+00.00	34.58'	13.15'
13+10.00	33.98'	13.14'
13+20.00	33.38'	13.16'
13+30.00	32.51'	13.16'
13+40.00	31.91'	13.15'
13+50.00	31.31'	13.15'
13+60.00	30.71'	13.16'
13+70.00	30.38'	13.17'
13+80.00	29.78'	13.18'
13+90.00	29.18'	13.18'

RETAINING WALL RW 723 ELEVATIONS

RW 723 LOL STA	TOP OF WALL ELEV	FG ELEV
14+00.00	28.58'	13.19'
14+10.00	27.98'	13.22'
14+20.00	27.38'	13.20'
14+30.00	26.78'	13.14'
14+40.00	26.18'	13.13'
14+50.00	25.59'	13.16'
14+60.00	25.01'	13.19'
14+70.00	24.44'	13.18'
14+80.00	23.89'	13.18'
14+90.00	23.36'	13.20'
15+00.00	22.85'	13.21'
15+10.00	22.36'	13.20'
15+20.00	21.89'	13.16'
15+30.00	21.44'	13.15'
15+40.00	21.00'	13.17'
15+50.00	20.59'	13.18'
15+60.00	20.19'	13.18'
15+70.00	19.82'	13.17'
15+80.00	19.46'	13.20'
15+90.00	19.12'	13.20'
16+00.00	18.80'	13.19'
16+10.00	18.49'	13.17'
16+20.00	18.21'	13.19'
16+30.00	17.95'	13.18'
16+40.00	17.70'	13.16'
16+50.00	17.48'	13.15'
16+60.00	17.27'	13.18'
16+70.00	17.08'	13.22'
16+80.00	16.91'	13.23'
16+90.00	16.76'	13.22'
17+00.00	16.63'	13.21'
17+10.00	16.52'	13.23'
17+20.00	16.42'	13.28'
17+30.00	16.35'	13.30'
17+40.00	16.29'	13.29'
17+50.00	16.25'	13.28'
17+60.00	16.22'	13.27'
17+70.00	16.18'	13.27'
17+80.00	16.15'	13.24'
17+90.00	16.12'	13.24'
17+93.25	16.11'	13.24'

RETAINING WALL RW 823 ELEVATIONS

RW 823 LOL STA	TOP OF WALL ELEV	FG ELEV
10+00.00	52.35'	14.77'
10+10.00	51.84'	14.70'
10+20.00	51.31'	14.64'
10+30.00	50.76'	14.57'
10+40.00	50.21'	14.54'
10+50.00	49.65'	14.51'
10+60.00	49.08'	14.47'
10+70.00	48.48'	14.43'
10+80.00	47.88'	14.39'
10+90.00	47.27'	14.36'
11+00.00	46.67'	14.35'
11+10.00	46.06'	14.34'
11+20.00	45.46'	14.33'
11+30.00	44.85'	14.32'
11+40.00	44.25'	14.32'
11+50.00	43.64'	14.32'
11+60.00	43.04'	14.32'
11+70.00	42.43'	14.33'
11+80.00	41.83'	14.33'
11+90.00	41.22'	14.33'
12+00.00	40.62'	14.33'
12+10.00	40.01'	14.33'
12+20.00	39.40'	14.34'
12+30.00	38.80'	14.34'
12+40.00	38.19'	14.34'
12+50.00	37.59'	14.34'
12+60.00	36.99'	14.35'
12+70.00	36.38'	14.35'
12+80.00	35.78'	14.35'
12+90.00	35.18'	14.36'
13+00.00	34.58'	14.36'
13+10.00	33.98'	14.37'
13+20.00	33.38'	14.38'
13+30.00	32.78'	14.39'
13+40.00	32.18'	14.39'
13+50.00	31.58'	14.39'
13+60.00	30.98'	14.39'
13+70.00	30.38'	14.40'
13+80.00	29.78'	14.40'
13+90.00	29.18'	14.40'

RETAINING WALL RW 823 ELEVATIONS

RW 823 LOL STA	TOP OF WALL ELEV	FG ELEV
14+00.00	28.58'	14.41'
14+10.00	27.98'	14.42'
14+20.00	27.38'	14.43'
14+30.00	26.78'	14.44'
14+40.00	26.18'	14.45'
14+50.00	25.59'	14.44'
14+60.00	25.01'	14.43'
14+70.00	24.44'	14.42'
14+80.00	23.89'	14.41'
14+90.00	23.36'	14.41'
15+00.00	22.85'	14.39'
15+10.00	22.36'	14.38'
15+20.00	21.89'	14.37'
15+30.00	21.44'	14.36'
15+40.00	21.00'	14.35'
15+50.00	20.59'	14.35'
15+60.00	20.19'	14.36'
15+70.00	19.82'	14.37'
15+80.00	19.46'	14.38'
15+90.00	19.12'	14.39'
16+00.00	18.80'	14.40'
16+10.00	18.36'	14.39'
16+20.00	18.09'	14.38'
16+30.00	17.83'	14.37'
16+40.00	17.59'	14.36'
16+50.00	17.38'	14.35'
16+60.00	17.27'	14.34'
16+70.00	17.08'	14.34'
16+80.00	16.91'	14.34'
16+90.00	16.76'	14.33'
17+00.00	16.63'	14.33'
17+10.00	16.52'	14.38'
17+20.00	16.42'	14.42'
17+30.00	16.35'	14.43'
17+40.00	16.29'	14.40'
17+50.00	16.25'	14.37'
17+60.00	16.22'	14.34'
17+70.00	16.18'	14.34'
17+80.00	16.15'	14.33'
17+90.00	16.12'	14.33'
17+93.25	16.11'	14.33'

SHEET ___ OF 400

NO.	DATE	DRAWN	REVISIONS -	CHK'D	APP'D
			NOT FOR CONSTRUCTION		

NO.	DATE	DRAWN	REVISIONS -	CHK'D	APP'D
			80% DESIGN		

Jacobs
2600 MICHELSON DRIVE, SUITE 500
IRVINE, CA 92612
T: (949) 224-7500
F: (949) 224-7501

SCALE: NONE
DRAWN: K. POPE
CHECKED: B. DENG
DESIGNED: L. DIECKMANN
ENGINEER / ARCHITECT
B. DENG

TERMINAL ISLAND GRADE SEPARATION

RETAINING WALL ELEVATIONS

THE PORT OF LOS ANGELES
ENGINEERING DIVISION
425 S. PALOS VERDES STREET SAN PEDRO CA 90731-3309

DRAWING NUMBER 1-3497
SHEET NUMBER RW-09

C:\Users\kpoppe1\DC\ACCDocs\Jacobs\US CA_d3391901_POLA Terminal Island GS\Project Files\30 PROJECT DATA\PID\STRUCTURE\Drawings\1-3497 RW-09.dwg, 8/15/2025 1:14:15 PM
POLAPR01_042023_BW3

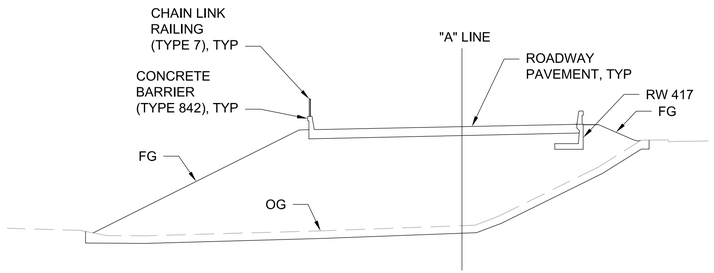

1RW-10 / RW-10 **TYPICAL SECTION** ("A" LINE STA 17+39.31 TO 17+87.95)
SCALE: 1"=20'

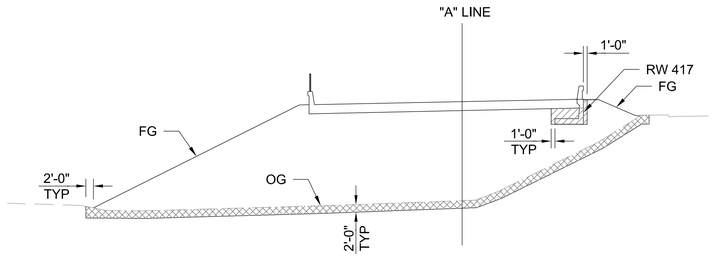

2RW-10 / RW-10 **LIMITS OF EXCAVATION** ("A" LINE STA 17+39.31 TO 17+87.95)
SCALE: 1"=20'

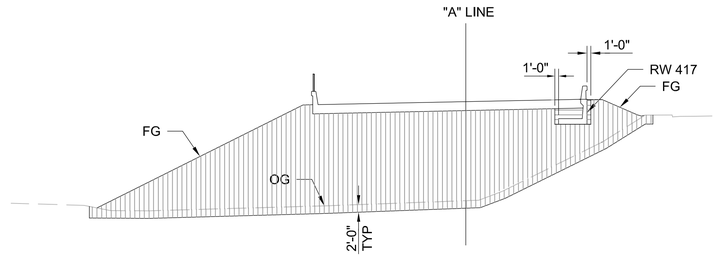

3RW-10 / RW-10 **LIMITS OF BACKFILL** ("A" LINE STA 17+39.31 TO 17+87.95)
SCALE: 1"=20'

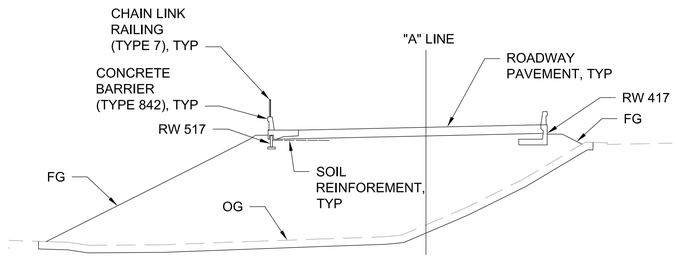

4RW-10 / RW-10 **TYPICAL SECTION** ("A" LINE STA 17+87.95 TO 19+21.27)
SCALE: 1"=20'

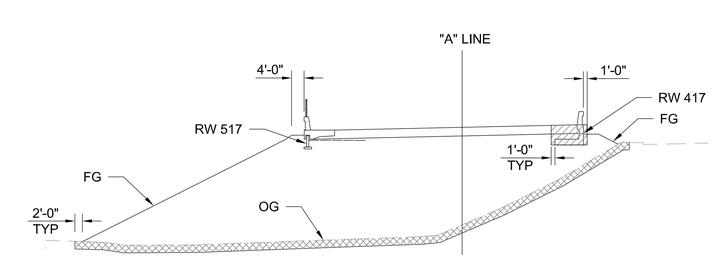

5RW-10 / RW-10 **LIMITS OF EXCAVATION** ("A" LINE STA 17+87.95 TO 19+21.27)
SCALE: 1"=20'

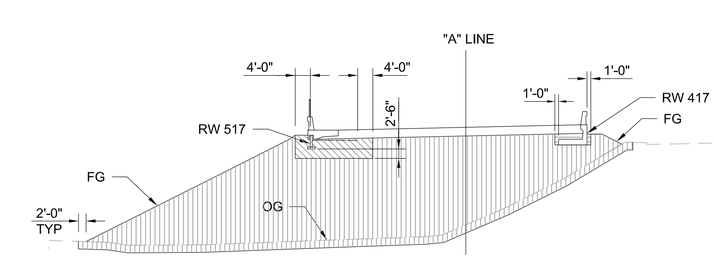

6RW-10 / RW-10 **LIMITS OF BACKFILL** ("A" LINE STA 17+87.95 TO 19+21.27)
SCALE: 1"=20'

LEGEND:
- ROADWAY IMPORT FILL
- STRUCTURAL BACKFILL (MSE)
- STRUCTURE EXCAVATION
- ROADWAY EXCAVATION
- STRUCTURAL BACKFILL (RETAINED SOIL)

SHEET ____ OF 400

NO.	DATE	DRAWN	REVISIONS -	CHK'D	APP'D
			NOT FOR CONSTRUCTION		

NO.	DATE	DRAWN	REVISIONS -	CHK'D	APP'D
			80% DESIGN		

Jacobs
2600 MICHELSON DRIVE, SUITE 500
IRVINE, CA 92612
T: (949) 224-7500
F: (949) 224-7501

SCALE: AS SHOWN
DRAWN: N. MORALES
CHECKED: B. DENG
DESIGNED: L. DIECKMANN
ENGINEER / ARCHITECT
B. DENG

TERMINAL ISLAND GRADE SEPARATION

EXCAVATION & BACKFILL LIMITS NO.1

THE PORT OF LOS ANGELES
ENGINEERING DIVISION
425 S. PALOS VERDES STREET SAN PEDRO CA 90731-3309

DRAWING NUMBER: 1-3497
SHEET NUMBER: RW-10

C:\Users\Zucchi\DCVACCDocs\Jacobs\US_CA_d3391901_POLA Terminal Island GS\Project Files\30 PROJECT DATA\PID\STRUCTURE\Drawings\1-3497 RW-10.dwg, 9/26/2025 9:05:57 AM
POLAPRO1_04/2023_BWD

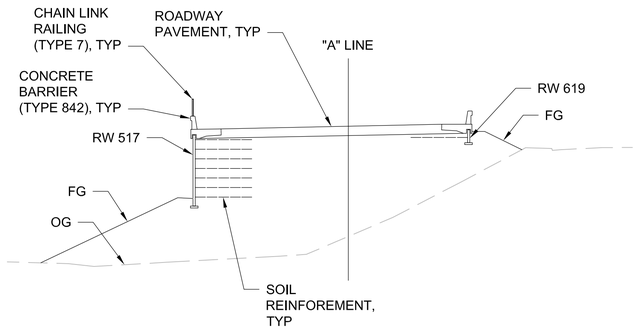

1RW-11 / RW-11 **TYPICAL SECTION** ("A" LINE STA 19+58.03 TO 19+98.65)
SCALE: 1"=20'

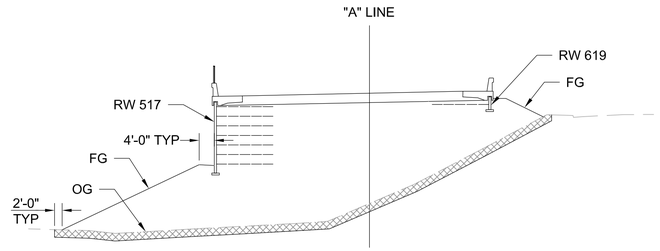

2RW-11 / RW-11 **LIMITS OF EXCAVATION** ("A" LINE STA 19+58.03 TO 19+98.65)
SCALE: 1"=20'

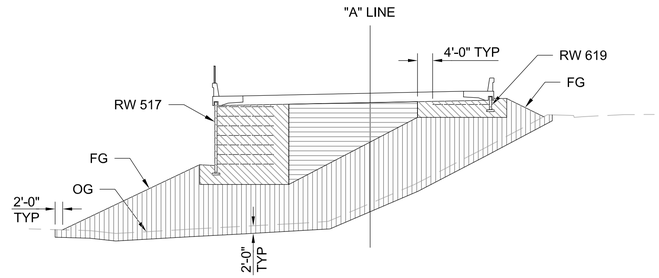

3RW-11 / RW-11 **LIMITS OF BACKFILL** ("A" LINE STA 19+58.03 TO 19+98.65)
SCALE: 1"=20'

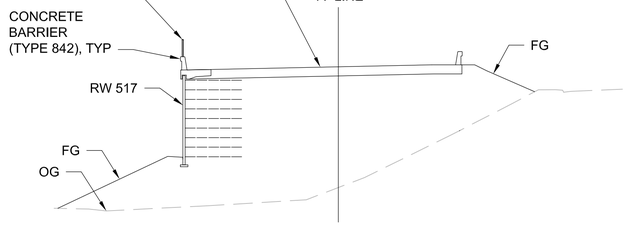

4RW-11 / RW-11 **TYPICAL SECTION** ("A" LINE STA 19+21.27 TO 19+58.03)
SCALE: 1"=20'

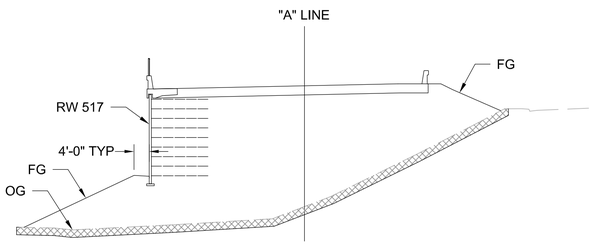

5RW-11 / RW-11 **LIMITS OF EXCAVATION** ("A" LINE STA 19+21.27 TO 19+58.03)
SCALE: 1"=20'

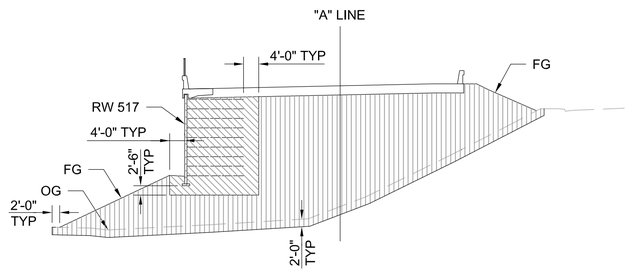

6RW-11 / RW-11 **LIMITS OF BACKFILL** ("A" LINE STA 19+21.27 TO 19+58.03)
SCALE: 1"=20'

LEGEND:
- ROADWAY IMPORT FILL
- STRUCTURAL BACKFILL (MSE)
- STRUCTURAL BACKFILL (RETAINED SOIL)
- STRUCTURE EXCAVATION
- ROADWAY EXCAVATION

SHEET ____ OF 400

NO.	DATE	DRAWN	REVISIONS -	CHK'D	APP'D
			NOT FOR CONSTRUCTION		

NO.	DATE	DRAWN	REVISIONS -	CHK'D	APP'D
			80% DESIGN		

Jacobs
2600 MICHELSON DRIVE, SUITE 500
IRVINE, CA 92612
T: (949) 224-7500
F: (949) 224-7501

SCALE: AS SHOWN
DRAWN: N. MORALES
CHECKED: B. DENG
DESIGNED: L. DIECKMANN
ENGINEER / ARCHITECT
B. DENG

TERMINAL ISLAND GRADE SEPARATION

EXCAVATION & BACKFILL LIMITS NO. 2

THE PORT OF LOS ANGELES
ENGINEERING DIVISION
425 S. PALOS VERDES STREET SAN PEDRO CA 90731-3309

DRAWING NUMBER: 1-3497
SHEET NUMBER: RW-11

POLAPRO1_042023_BWD

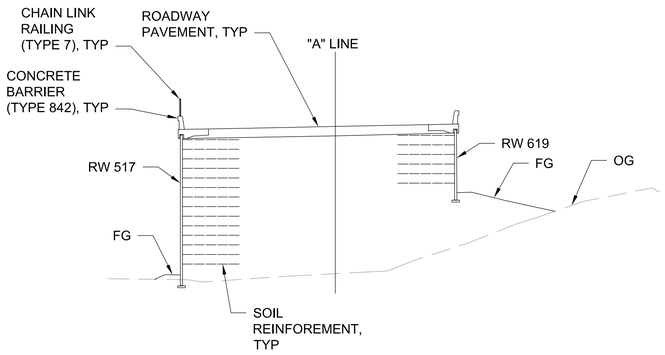

1RW-12 / RW-12 **TYPICAL SECTION** (RW 517 LOL STA 11+43.89 TO 11+90.61 & RW 619 LOL STA 10+25.02 TO 10+72.02)
SCALE: 1"=20'

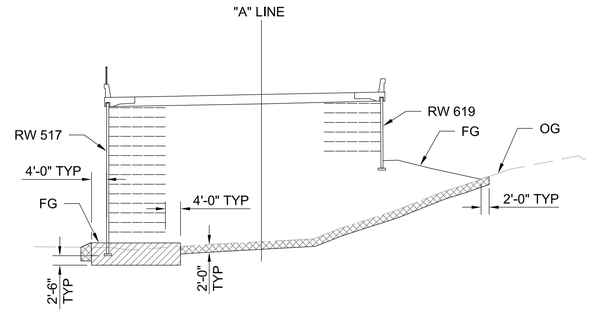

2RW-12 / RW-12 **LIMITS OF EXCAVATION** (RW 517 LOL STA 11+43.89 TO 11+90.61 & RW 619 LOL STA 10+25.02 TO 10+72.02)
SCALE: 1"=20'

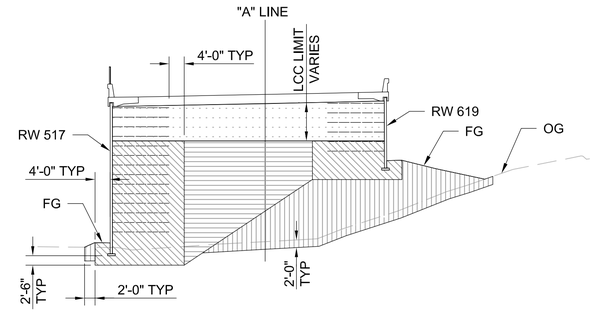

3RW-12 / RW-12 **LIMITS OF BACKFILL** (RW 517 LOL STA 11+43.89 TO 11+90.61 & RW 619 LOL STA 10+25.02 TO 10+72.02)
SCALE: 1"=20'

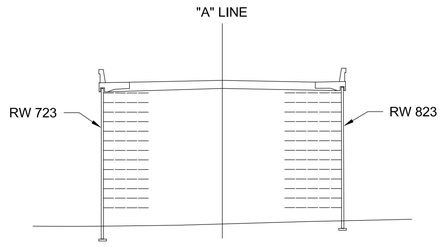

4RW-12 / RW-12 **TYPICAL SECTION** ("A" LINE STA 23+76.75 TO 24+01.75)
SCALE: 1"=20'

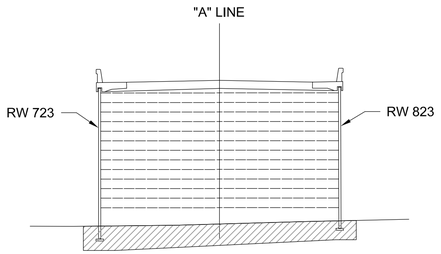

5RW-12 / RW-12 **LIMITS OF EXCAVATION** ("A" LINE STA 23+76.75 TO 24+01.75)
SCALE: 1"=20'

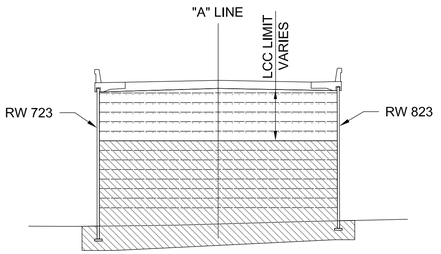

6RW-12 / RW-12 **LIMITS OF BACKFILL** ("A" LINE STA 23+76.75 TO 24+01.75)
SCALE: 1"=20'

NOTES:

1. FOR LIGHTWEIGHT CELLULAR CONCRETE LIMITS, SEE SHEET S-03.

LEGEND:

- ROADWAY IMPORT FILL
- STRUCTURAL BACKFILL (MSE)
- STRUCTURAL BACKFILL (RETAINED SOIL)
- STRUCTURE EXCAVATION
- ROADWAY EXCAVATION
- LIGHTWEIGHT CELLULAR CONCRETE (CLASS 1)

SHEET ---- OF 400

NO.	DATE	DRAWN	REVISIONS -	CHK'D	APP'D
			NOT FOR CONSTRUCTION		

NO.	DATE	DRAWN	REVISIONS -	CHK'D	APP'D
			80% DESIGN		

Jacobs
2950 MICHELSON DRIVE, SUITE 500
IRVINE, CA 92612
T: (949) 224-7500
F: (949) 224-7501

SCALE: AS SHOWN
DRAWN: N. MORALES
CHECKED: B. DENG
DESIGNED: L. DIECKMANN
ENGINEER / ARCHITECT
B. DENG

TERMINAL ISLAND GRADE SEPARATION

EXCAVATION & BACKFILL LIMITS NO. 3

THE PORT OF LOS ANGELES
ENGINEERING DIVISION
425 S. PALOS VERDES STREET SAN PEDRO CA 90731-3309

DRAWING NUMBER 1-3497
SHEET NUMBER RW-12

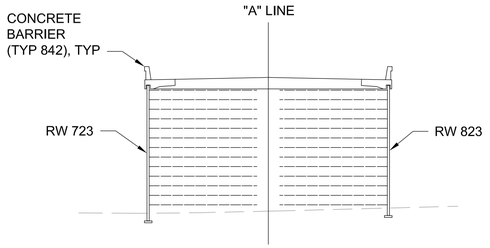

1RW-13 / RW-13 **TYPICAL SECTION** ("A" LINE STA 24+01.75 TO 30+18.60)
SCALE: 1"=20'

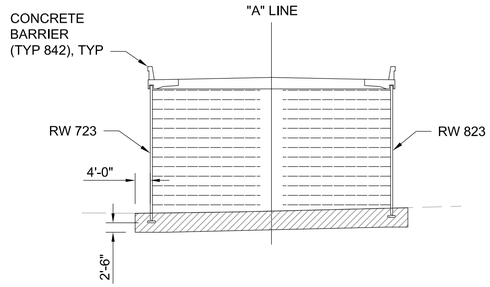

2RW-13 / RW-13 **LIMITS OF EXCAVATION** ("A" LINE STA 24+01.75 TO 30+18.60)
SCALE: 1"=20'

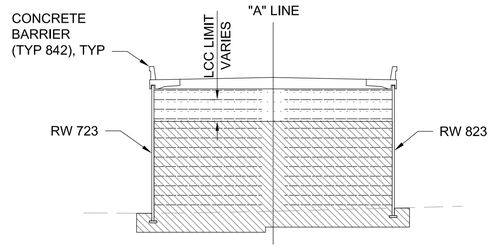

3RW-13 / RW-13 **LIMITS OF BACKFILL** ("A" LINE STA 24+01.75 TO 30+18.60)
SCALE: 1"=20'

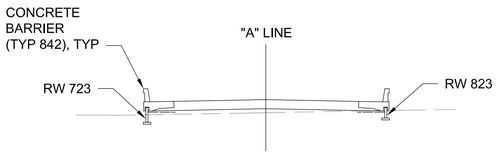

4RW-13 / RW-13 **TYPICAL SECTION** ("A" LINE STA 30+18.60 TO 31+70.00)
SCALE: 1"=20'

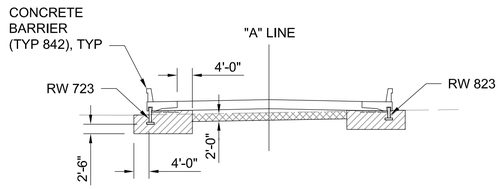

5RW-13 / RW-13 **LIMITS OF EXCAVATION** ("A" LINE STA 30+18.60 TO 31+70.00)
SCALE: 1"=20'

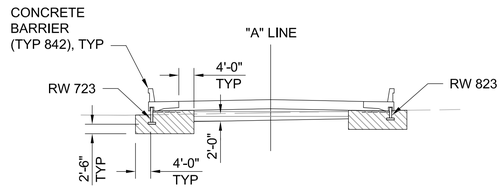

6RW-13 / RW-13 **LIMITS OF BACKFILL** ("A" LINE STA 30+18.60 TO 31+70.00)
SCALE: 1"=20'

NOTES:

1. FOR LIGHTWEIGHT CELLULAR CONCRETE LIMITS, SEE SHEET S-03.

LEGEND:

- ROADWAY IMPORT FILL
- STRUCTURAL BACKFILL (MSE)
- STRUCTURAL BACKFILL (RETAINED SOIL)
- STRUCTURE EXCAVATION
- ROADWAY EXCAVATION
- LIGHTWEIGHT CELLULAR CONCRETE (CLASS 1)

SHEET ____ OF 400

NO.	DATE	DRAWN	REVISIONS -	CHK'D	APP'D
			NOT FOR CONSTRUCTION		

NO.	DATE	DRAWN	REVISIONS -	CHK'D	APP'D
			80% DESIGN		

Jacobs
2600 MICHELSON DRIVE, SUITE 500
IRVINE, CA 92612
T: (949) 224-7500
F: (949) 224-7501

SCALE:	AS SHOWN
DRAWN:	N. MORALES
CHECKED:	B. DENG
DESIGNED:	L. DIECKMANN
ENGINEER / ARCHITECT	E. DEMARCO

TERMINAL ISLAND GRADE SEPARATION

EXCAVATION & BACKFILL LIMITS NO. 4

THE PORT OF LOS ANGELES
ENGINEERING DIVISION
425 S. PALOS VERDES STREET SAN PEDRO CA 90731-3309

DRAWING NUMBER	SHEET NUMBER
1-3497	RW-13

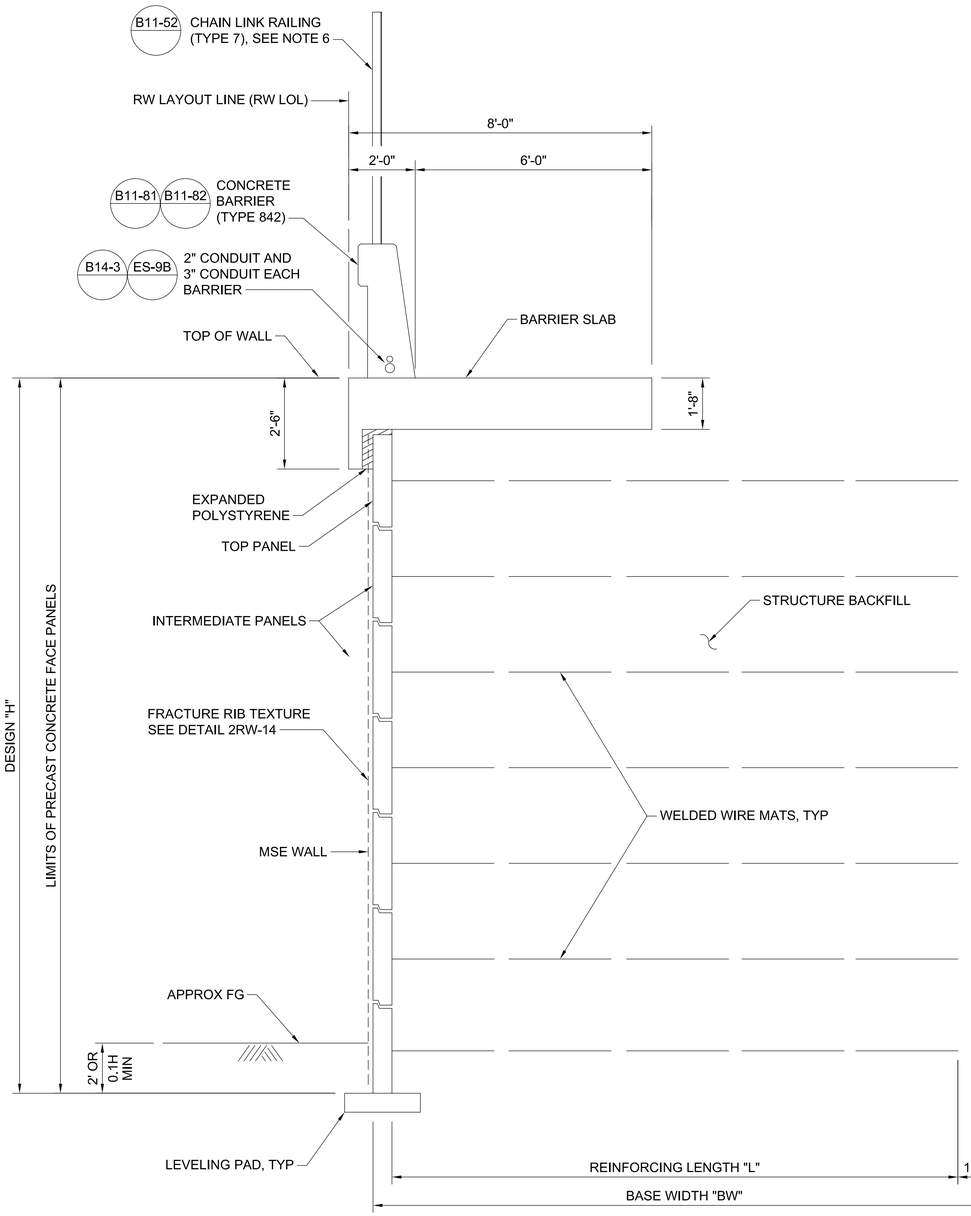

1RW-14 / RW-14 **TYPICAL SECTION**
SCALE: NTS

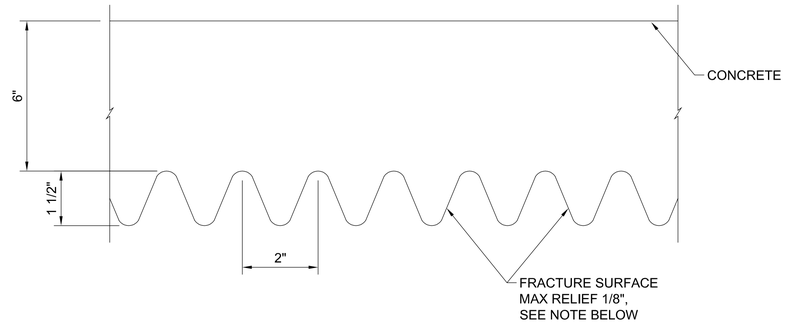

NOTE:
EXTEND FRACTURED RIB TEXTURE 6" MIN. BELOW FINISHED GRADE OR SIDEWALK.

2RW-14 / RW-14 **FRACTURE RIB TEXTURE**
SCALE: NTS

MSE NOTES:

1. FOR DESIGN HEIGHT "H" AND BASE WIDTH "BW", SEE "RETAINING WALL PLAN AND ELEVATION (RW-02 THROUGH RW-08)" SHEETS.
2. FOR BARRIER SLAB DETAILS, SEE SHEET RW-15.
3. FOR PANEL DETAILS, SEE SHEET RW-16.
4. FOR GENERAL NOTE AND WIRE MAT DETAILS, SEE SHEET RW-17.
5. FOR FENCE DETAILS, SEE RW-30 SHEET.
6. FOR LIMITS OF CHAIN LINK RAILING (TYPE 7), SEE RW-03 SHEET.
7. VERIFY EXISTING UTILITIES AND NOTIFY AGENCIES PRIOR TO ANY REMOVAL, RELOCATIONS, OR NEW CONSTRUCTION. SEE ROADWAY PLANS FOR UTILITY DETAILS NOT SHOWN.
8. VERIFY CONTROLLING FIELD DIMENSIONS BEFORE ORDERING OR FABRICATING ANY MATERIALS.
9. FOR CONCRETE BARRIER AND BARRIER SLAB DETAILS SEE SHEET RW-15.

SHEET ____ OF 400

NO.	DATE	DRAWN	REVISIONS -	CHK'D	APP'D
			NOT FOR CONSTRUCTION		

NO.	DATE	DRAWN	REVISIONS -	CHK'D	APP'D
			80% DESIGN		

Jacobs
3600 MICHELSON DRIVE, SUITE 500
IRVINE, CA 92612
T: (949) 224-7500
F: (949) 224-7501

SCALE: AS SHOWN
DRAWN: K. POPE
CHECKED: B. DENG
DESIGNED: L. DIECKMANN
ENGINEER / ARCHITECT
B. DENG

TERMINAL ISLAND GRADE SEPARATION

MECHANICALLY STABILIZED EMBANKMENT TYPICAL SECTION

THE PORT OF LOS ANGELES
ENGINEERING DIVISION
425 S. PALOS VERDES STREET SAN PEDRO CA 90731-3309

DRAWING NUMBER: 1-3497
SHEET NUMBER: RW-14

C:\Users\kpope1\DC\ACCDocs\Jacobs\US CA_d3391901_POLA Terminal Island GS\Project Files\30 PROJECT DATA\PID\STRUCTURE\Drawings\1-3497 RW-14.dwg, 8/15/2025 1:52:40 PM
POLAPRO1_042023_BWD

NOTES
1. CLEARANCE TO REINFORCING STEEL IN CONCRETE BARRIER TO BE 2".
2. NOT ALL BARRIER REINFORCEMENT SHOWN.
3. NO EXPANSION JOINTS IN CONCRETE BARRIER OR BARRIER SLAB WITHIN WALL LIMITS.
4. FOR LIGHTING ON BARRIER DETAILS, SEE RW-29.
5. MINIMUM SLAB LENGTH: 40 FT.

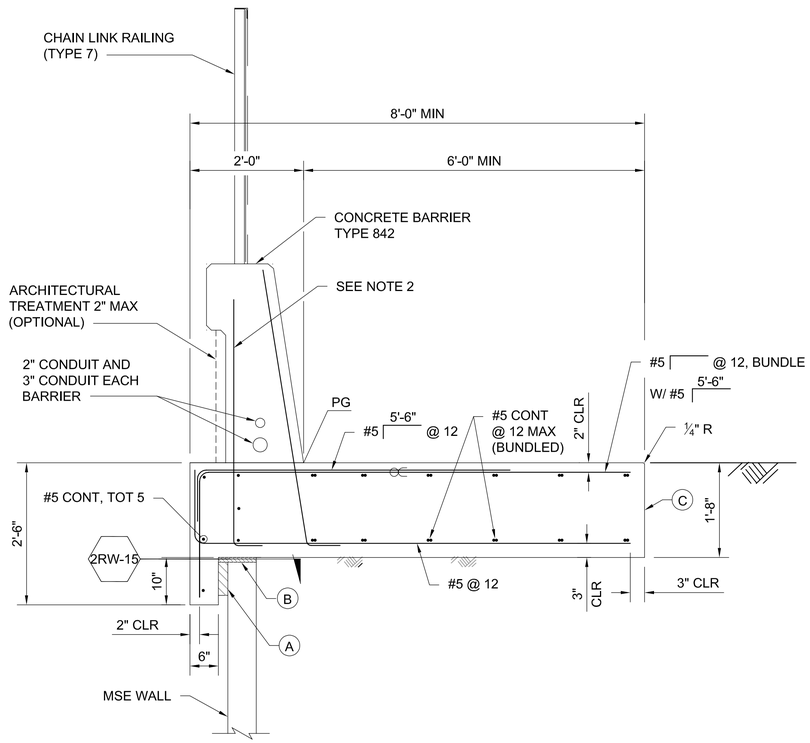

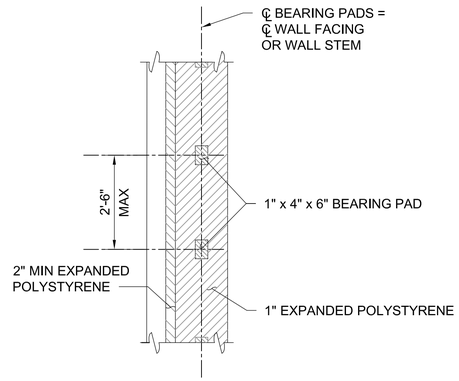

NOTES
- (A) 2" MIN EXPANDED POLYSTYRENE
- (B) 1" EXPANDED POLYSTYRENE ON MSE AND CONCRETE STEM WALLS
- (C) CONTACT JOINT
- ⊂ INDICATES BUNDLED BARS

1RW-15 / RW-15 BARRIER SLAB AND CONCRETE BARRIER
SCALE: ¾"=1'-0"

2RW-15 / 1RW-15 SECTION
SCALE: ½ "=1'-0"

SHEET ____ OF 400

NO.	DATE	DRAWN	REVISIONS -	CHK'D	APP'D
			NOT FOR CONSTRUCTION		

NO.	DATE	DRAWN	REVISIONS -	CHK'D	APP'D
			80% DESIGN		

Jacobs
2600 MICHELSON DRIVE, SUITE 500
IRVINE, CA 92612
T: (949) 224-7500
F: (949) 224-7501

SCALE: AS SHOWN
DRAWN: S. LEONG
CHECKED: B. DENG
DESIGNED: L. DIECKMANN
ENGINEER / ARCHITECT
B. DENG

TERMINAL ISLAND GRADE SEPARATION

BARRIER SLAB DETAILS

THE PORT OF LOS ANGELES
ENGINEERING DIVISION
425 S. PALOS VERDES STREET SAN PEDRO CA 90731-3309

DRAWING NUMBER: 1-3497
SHEET NUMBER: RW-15

C:\Users\kpoppe1\DC\ACCDocs\Jacobs\US CA_d3391901_POLA Terminal Island GS\Project Files\30 PROJECT DATA\PID\STRUCTURE\Drawings\1-3497 RW-15.dwg, 8/15/2025 1:53:19 PM
POLAPRO1_04/2023_BW3

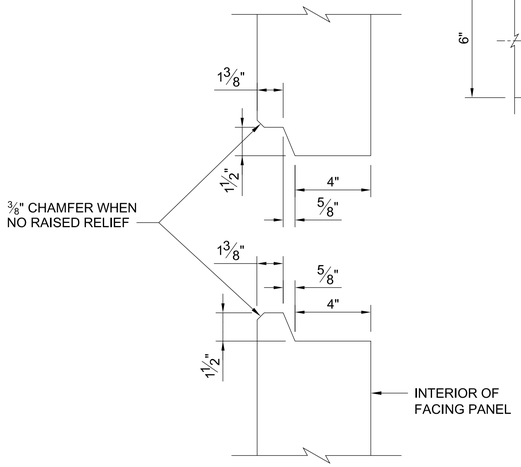

1RW-16 / RW-16 **HORIZONTAL JOINT DETAIL**
SCALE: 3"=1'-0"

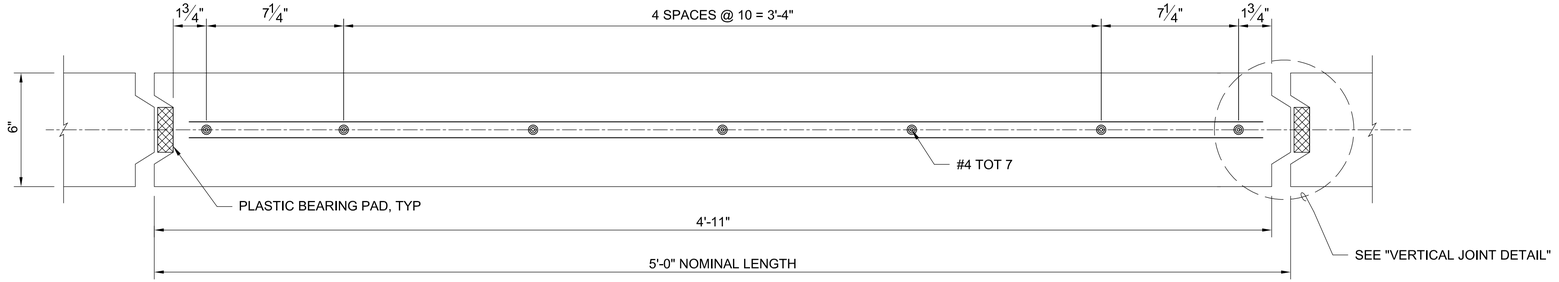

2RW-16 / RW-16 **PLAN - FACE PANEL**
SCALE: 3"=1'-0"

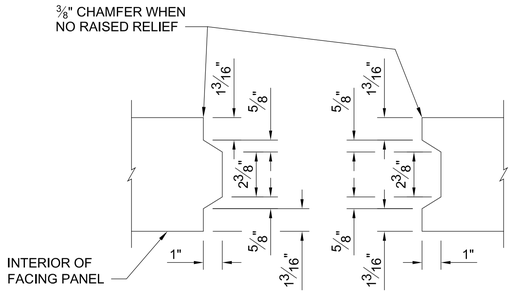

3RW-16 / RW-16 **VERTICAL JOINT DETAIL**
SCALE: 3"=1'-0"

LEGEND

PLAIN PLASTIC BEARING PAD

NOTES

1. CONCRETE SURFACE TEXTURE AND TREATMENT NOT SHOWN.
2. PLACE PLAIN PLASTIC BEARING PADS IN THE PANEL JOINTS BETWEEN THE PANELS. PLACE ONE IN EACH VERTICAL JOINT WHERE THE HORIZONTAL JOINTS INTERSECT. PLACE TWO PER PANEL IN EACH HORIZONTAL JOINT:

   3/4" x 2 3/8" x 6" FOR VERTICAL JOINTS
   3/4" x 4" x 6" FOR HORIZONTAL JOINTS
3. BOND A STRIP OF FILTER FABRIC CLASS A, 1'-0" WIDE, OVER THE FULL LENGTH OF PANEL JOINTS.
4. TOP LAYER OF WELDED WIRE MATS ATTACHED PARALLEL TO TOP OF PANEL WHEN TOP OF WALL IS ANGLED OR CURVED.
5. ELIMINATE MID-LEVEL MAT WHEN CLOSER THAN 6" TO TOP MAT, CONTINUE VARIABLE DIMENSIONS BETWEEN REMAINING MATS.

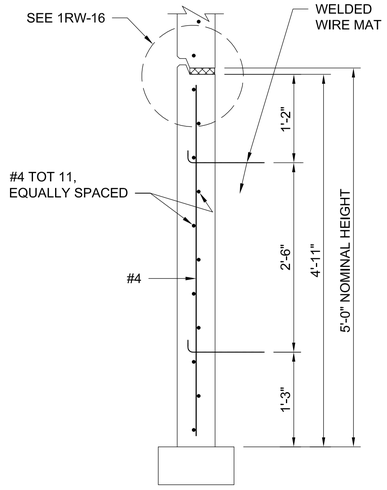

4RW-16 / RW-16 **BOTTOM PANEL**
SCALE: 1"=1'-0"

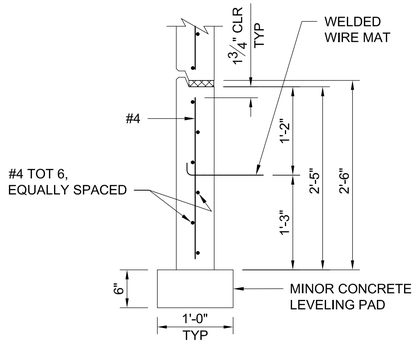

5RW-16 / RW-16 **BOTTOM HALF PANEL**
SCALE: 1"=1'-0"

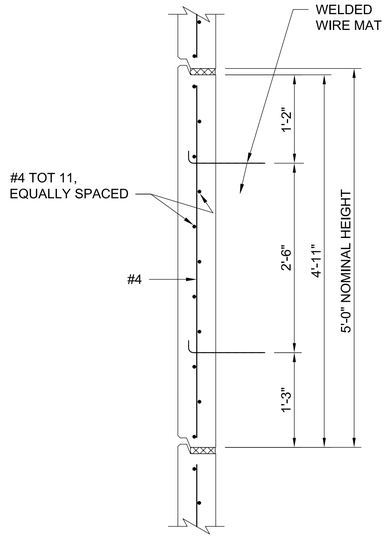

6RW-16 / RW-16 **INTERMEDIATE PANEL**
SCALE: 1"=1'-0"

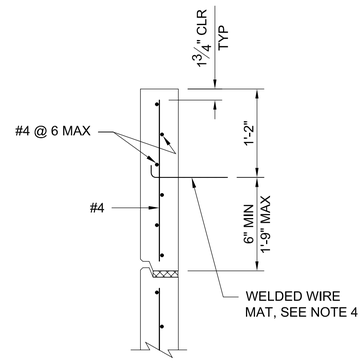

7RW-16 / RW-16 **TOP HALF PANEL**
SCALE: 1"=1'-0"

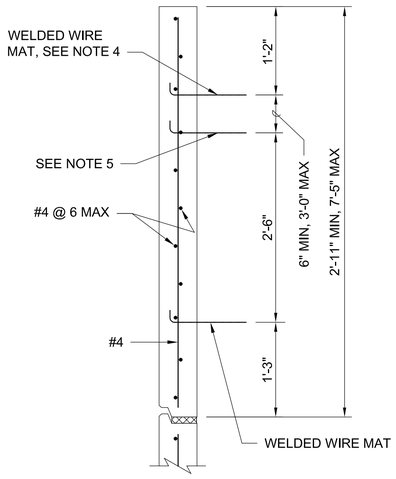

8RW-16 / RW-16 **TOP PANEL WITH MULTIPLE MATS**
SCALE: 1"=1'-0"

SHEET ____ OF 400

NO.	DATE	DRAWN	REVISIONS -	CHK'D	APP'D
			NOT FOR CONSTRUCTION		

NO.	DATE	DRAWN	REVISIONS -	CHK'D	APP'D
			80% DESIGN		

Jacobs
2600 MICHELSON DRIVE, SUITE 500
IRVINE, CA 92612
T: (949) 224-7500
F: (949) 224-7501

SCALE: AS SHOWN
DRAWN: N. MORALES
CHECKED: B. DENG
DESIGNED: L. DIECKMANN
ENGINEER / ARCHITECT
B. DENG

TERMINAL ISLAND GRADE SEPARATION

MECHANICALLY STABILIZED EMBANKMENT DETAIL NO.1

THE PORT OF LOS ANGELES
ENGINEERING DIVISION
425 S. PALOS VERDES STREET SAN PEDRO CA 90731-3309

DRAWING NUMBER: 1-3497
SHEET NUMBER: RW-16

C:\Users\kpoppe1\DC\ACCDocs\Jacobs\US CA_d3391901_POLA Terminal Island GS\Project Files\30 PROJECT DATA\PID\STRUCTURE\Drawings\1-3497 RW-16.dwg, 8/15/2025 1:58:47 PM
POLAPRO1_04/2023_BWD

GENERAL NOTES
LOAD AND RESISTANCE FACTOR DESIGN

DESIGN:	AASHTO LRFD BRIDGE DESIGN SPECIFIATIONS, 2007 EDITION WITH CALIFORNIA AMENDMENTS
LIVE LOAD:	2'-0" LIVE LOAD SURCHARGE
TRAFFIC COLLISION LOAD:	f_t= 54 KIPS
SEISMIC LOADING:	K_h = 0.2
REINFORCED CONCRETE:	f_y = 60 KSI f'_c = 3.6 KSI
PRECAST CONCRETE PANELS:	f_y = 60 KSI f'_c = 4.0 KSI
SOIL REINFORCEMENT:	WELDED WIRE MATS: F_y = 65 KSI COUPLER: F_y = 36 KSI CORROSION RATE = 0.001 IN/YEAR
SOIL PARAMETERS:	INTERNAL DESIGN Φ = 34°, γ = 0.120 KIP/FT EXTERNAL DESIGN Φ = (RETAINED BACKFILL) = 30°, γ= 0.12 KIP/FT Φ = (FOUNDATION) = 30°

NOTES

1. DISTANCE AS REQUIRED TO PERMIT COUPLER TO BE SWAGED.
2. PLACE #4 x 3'-2", CENTERED ON CONNECTOR MAT, BUT NOT WELDED TO IT.
3. ALL TRANSVERSE WIRES SIZE W15 AT VARIOUS SPACING AS SHOWN ELSEWHERE.
4. SIZE OF LONGITUDINAL WIRES SHOWN ELSEWHERE.

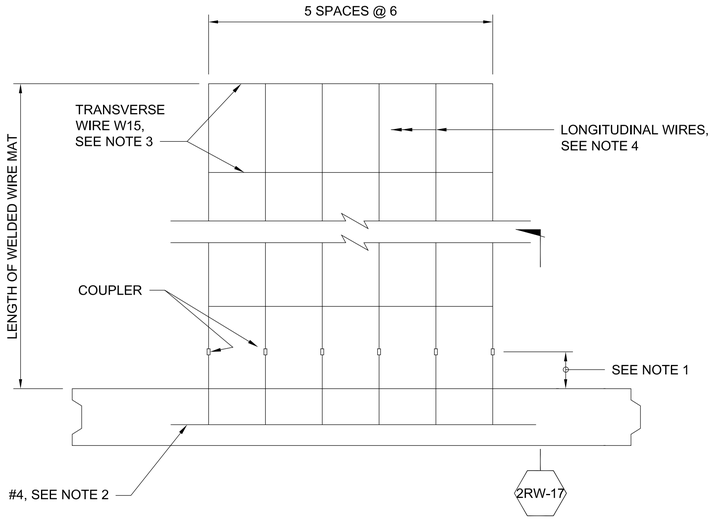

1RW-17, RW-17 PLAN (SIX WELDED WIRE MAT)
SCALE: NTS

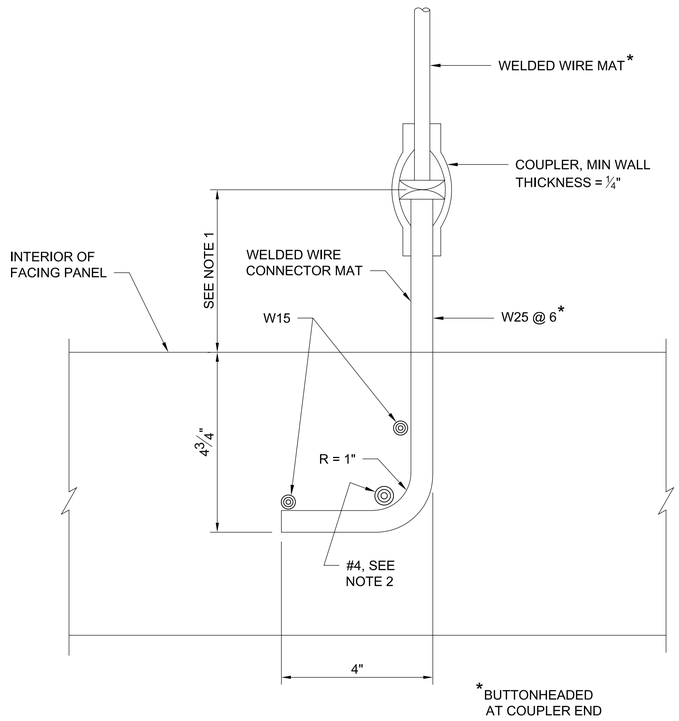

2RW-17, 1RW-17, 3RW-17 SECTION
SCALE: 6"=1'-0"

NOTE: PANEL REINFORCEMENT NOT SHOWN.

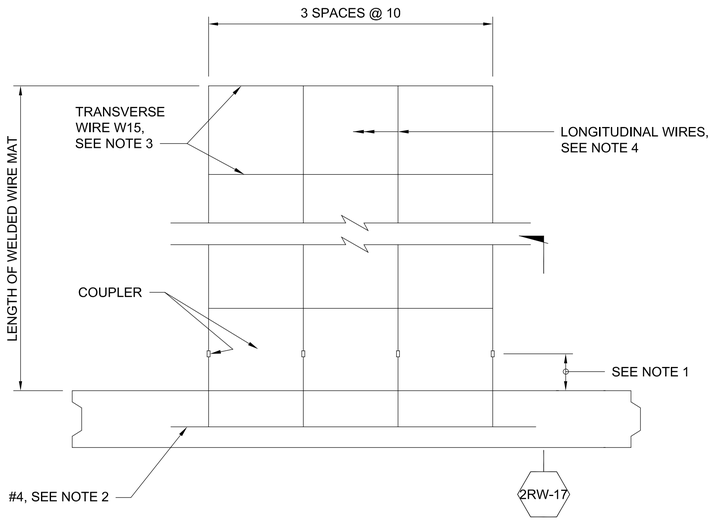

3RW-17, RW-17 PLAN (FOUR WELDED WIRE MAT)
SCALE: NTS

SHEET ____ OF 400

NO.	DATE	DRAWN	REVISIONS -	CHK'D	APP'D
			NOT FOR CONSTRUCTION		

NO.	DATE	DRAWN	REVISIONS -	CHK'D	APP'D
			80% DESIGN		

Jacobs
2600 MICHELSON DRIVE, SUITE 500
IRVINE, CA 92612
T: (949) 224-7500
F: (949) 224-7501

SCALE:	AS SHOWN
DRAWN:	N. MORALES
CHECKED:	B. DENG
DESIGNED:	L. DIECKMANN
ENGINEER / ARCHITECT	B. DENG

TERMINAL ISLAND GRADE SEPARATION

MECHANICALLY STABILIZED EMBANKMENT DETAIL NO.2

THE PORT OF LOS ANGELES
ENGINEERING DIVISION
425 S. PALOS VERDES STREET SAN PEDRO CA 90731-3309

DRAWING NUMBER 1-3497

SHEET NUMBER RW-17

C:\Users\kpoppe1\DCACCDocs\Jacobs\US CA_d3391901_POLA Terminal Island GS\Project Files\30 PROJECT DATA\PID\STRUCTURE\Drawings\1-3497 RW-17.dwg, 8/15/2025 1:59:19 PM
POLAPRO1_042022_BW3

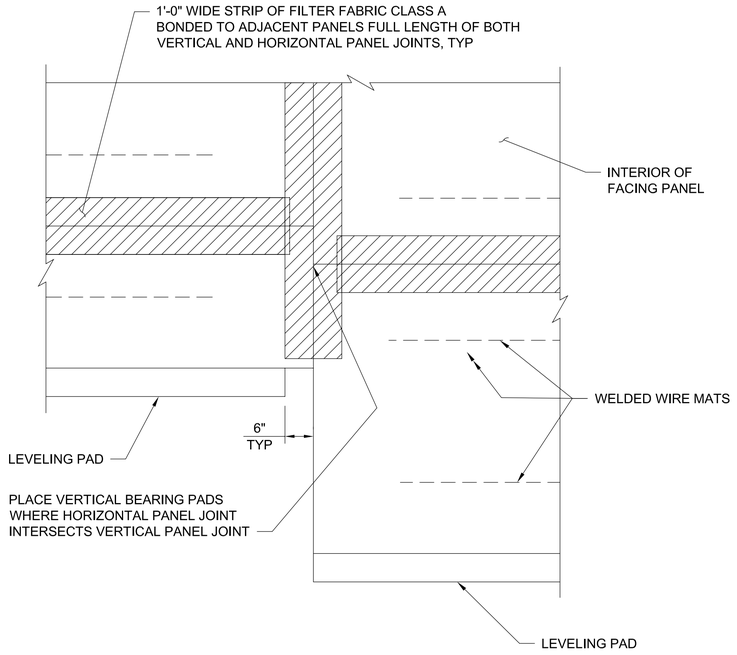

1RW-18 / RW-18 **PART ELEVATION**
SCALE: 3/4"=1'-0"

NOTES

1. CENTER INSPECTION WIRE IN FACING PANEL.
2. FABRICATE INSPECTION WIRE FROM W11 WIRE REPRESENTATIVE OF THE WELDED WIRE MATS, WITH ⅜"Ø -16 UNC THREADS FOR AT LEAST 1½" OF ONE END.
3. PLACE INSPECTION WIRE HORIZONTAL AND PERPENDICULAR TO THE WALL PANEL PRIOR TO BACKFILLING.
4. ENCAPSULATE THREADED END WITH CORROSION INHIBITING MASTIC, VINYL COVERING, AND SECURE WITH PLASTIC TIE.
5. FOR MSE FACING PANEL TO ABUTMENT RETURN WALL DETAIL, SEE 2S-11.

LEGEND

- FILTER FABRIC CLASS A
- NEOPRENE PLUG
- EXPANSION JOINT FILLER
- UNC UNIFIED COARSE THREAD

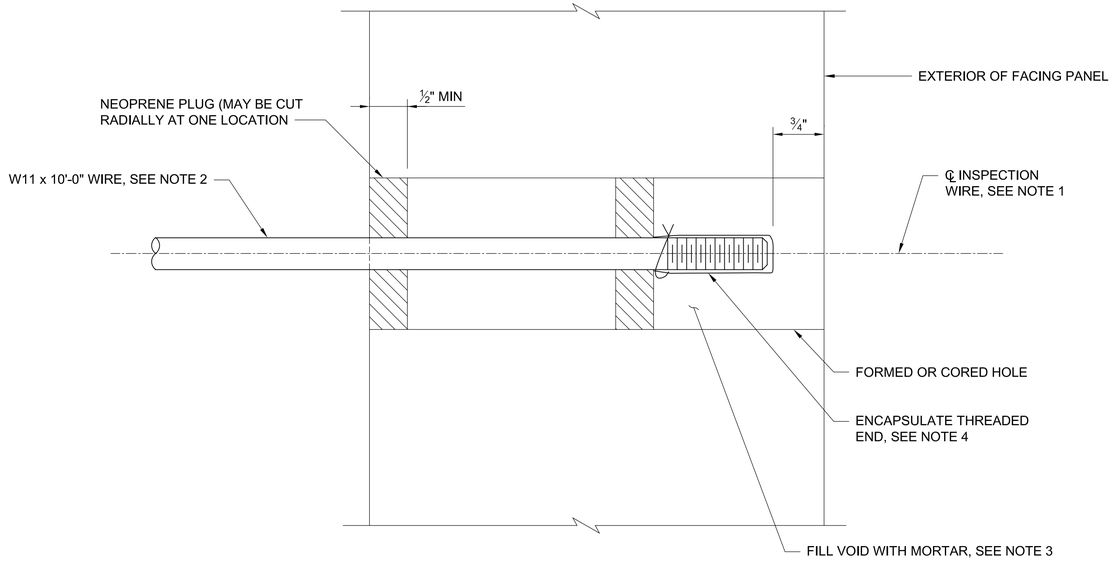

2RW-18 / RW-18 **INSPECTION WIRE DETAIL**
SCALE: NTS

SHEET ____ OF 400

NO.	DATE	DRAWN	REVISIONS -	CHK'D	APP'D
			NOT FOR CONSTRUCTION		

NO.	DATE	DRAWN	REVISIONS -	CHK'D	APP'D
			80% DESIGN		

Jacobs
2600 MICHELSON DRIVE, SUITE 500
IRVINE, CA 92612
T: (949) 224-7500
F: (949) 224-7501

SCALE: AS SHOWN
DRAWN: N. MORALES
CHECKED: B. DENG
DESIGNED: L. DIECKMANN
ENGINEER / ARCHITECT
B. DENG

TERMINAL ISLAND GRADE SEPARATION

MECHANICALLY STABILIZED EMBANKMENT DETAIL NO.3

THE PORT OF LOS ANGELES
ENGINEERING DIVISION
425 S. PALOS VERDES STREET SAN PEDRO CA 90731-3309

DRAWING NUMBER: 1-3497
SHEET NUMBER: RW-18

C:\Users\kpoppe1\DC\ACCDocs\Jacobs\US CA_d3391901_POLA Terminal Island GS\Project Files\30 PROJECT DATA\PID\STRUCTURE\Drawings\1-3497 RW-18.dwg, 8/15/2025 2:00:22 PM
POLAPRO1_04/2023_BWD

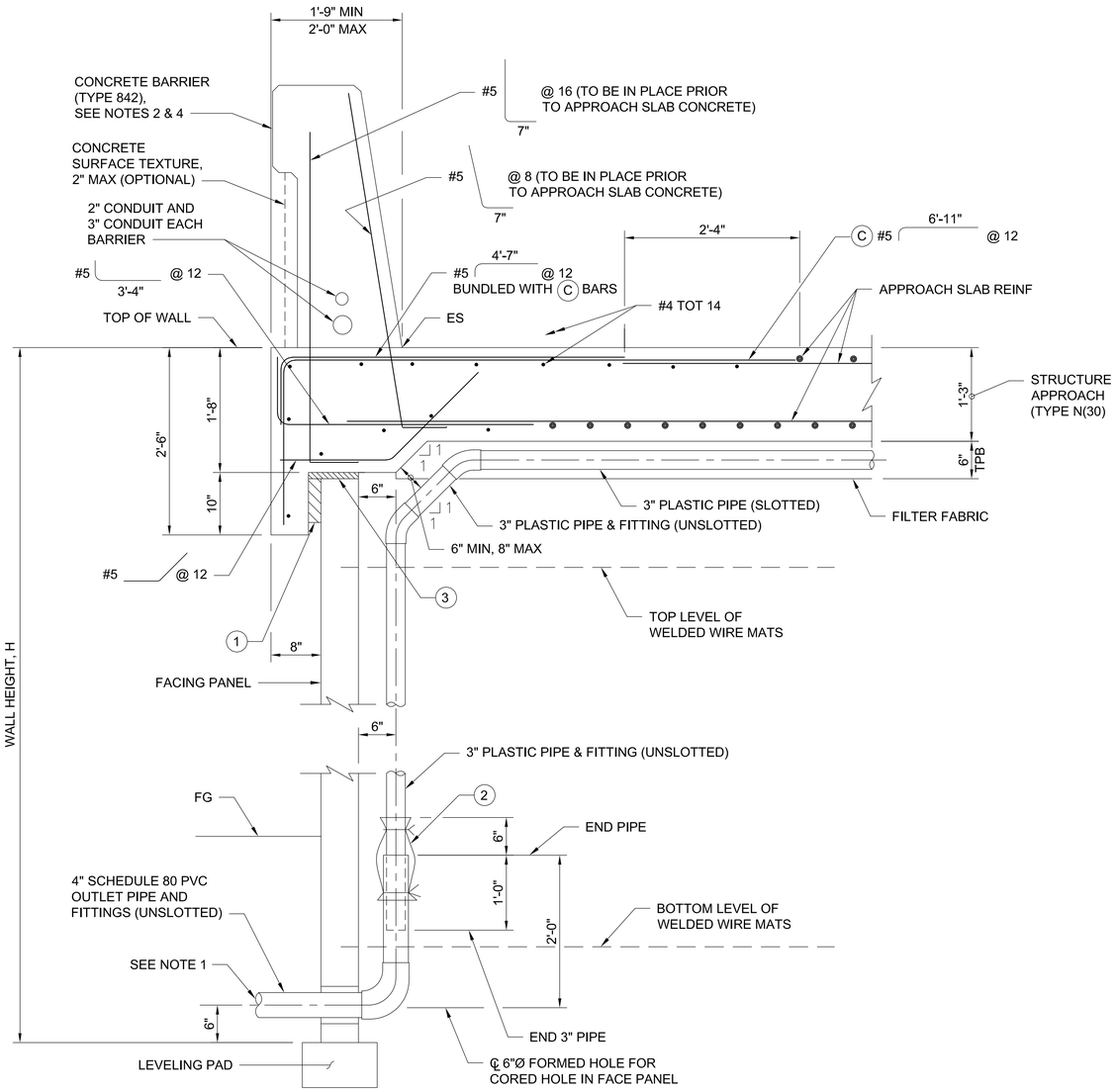

1RW-19 / RW-19 STRUCTURE APPROACH SLAB AND CONCRETE BARRIER

SCALE: 1"=1'-0"

NOTES

1. LOW END OF SUBGRADE DRAIN SHOWN, AT HIGH END INSTALL CAP AT END OF 3" SLOTTED PIPE. SUBGRADE DRAIN LOCATED AT END OF STRUCTURE APPROACH SLAB.
2. NOT ALL BARRIER REINFORCEMENT SHOWN.
3. AT ACUTE CORNERS OF STRUCTURE APPROACH SLAB, BEND REINFORCEMENT AS REQUIRED TO CLEAR EXPANSION JOINT.
4. SPECIFIC CONCRETE BARRIER TO BE UTILIZED AS SHOWN ON SHEET RW-14. FOR CONCRETE BARRIER SLAB WITHOUT SOUND WALL, USE CONCRETE BARRIER (TYPE 842); FOR ADDITIONAL DETAILS, SEE SHEET RW-15.
5. FOR RESERVOIR DEPTH, "S", SEE NOTES ON P18

(1) 2" EXPANDED POLYSTYRENE RECESSED 2" INTO BARRIER SLAB AT FRONT OF FACING PANEL

(2) 1'-0" WIDE x 2'-0" FILTER FABRIC CLASS A WRAPPED AROUND PIPE AND SECURED WITH NYLON TIES

(3) 1" EXPANDED POLYSTYRENE

2RW-19 / RW-19 BARRIER SLAB ISOLATION JOINT DETAIL

SCALE: NTS

SHEET ____ OF 400

NO.	DATE	DRAWN	REVISIONS -	CHK'D	APP'D
			NOT FOR CONSTRUCTION		

NO.	DATE	DRAWN	REVISIONS -	CHK'D	APP'D
			80% DESIGN		

Jacobs
2600 MICHELSON DRIVE, SUITE 500
IRVINE, CA 92612
T: (949) 224-7500
F: (949) 224-7501

SCALE:	AS SHOWN
DRAWN:	N. MORALES
CHECKED:	B. DENG
DESIGNED:	L. DIECKMANN
ENGINEER / ARCHITECT	B. DENG

TERMINAL ISLAND GRADE SEPARATION

MECHANICALLY STABILIZED EMBANKMENT DETAIL NO.4

THE PORT OF LOS ANGELES
ENGINEERING DIVISION
425 S. PALOS VERDES STREET SAN PEDRO CA 90731-3309

DRAWING NUMBER	SHEET NUMBER
1-3497	RW-19

C:\Users\kpoppe1\DC\ACCDocs\Jacobs\US CA_d3391901_POLA Terminal Island GS\Project Files\30 PROJECT DATA\PID\STRUCTURE\Drawings\1-3497 RW-19.dwg, 8/15/2025 2:01:18 PM
POLAPRO1_042023_BW3

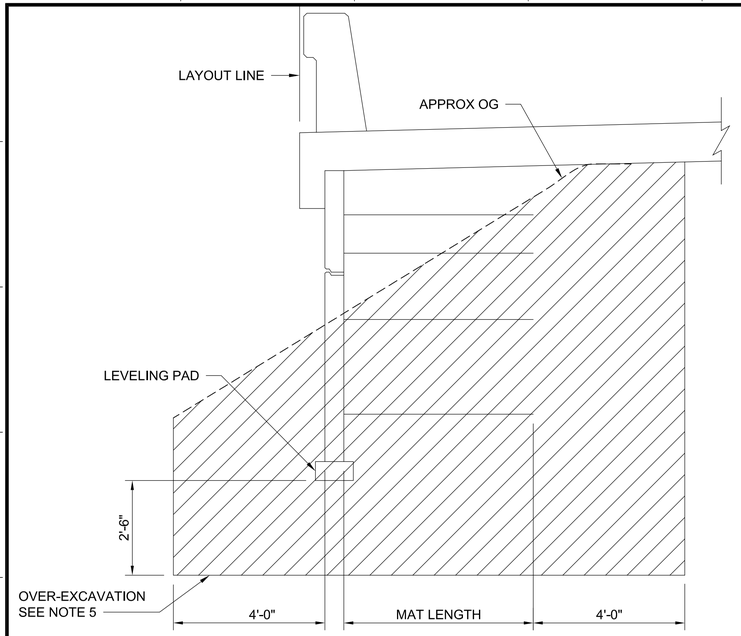

1RW-20 / RW-20 **LIMTS OF EXCAVATION**
SCALE: 1/2"=1'-0"

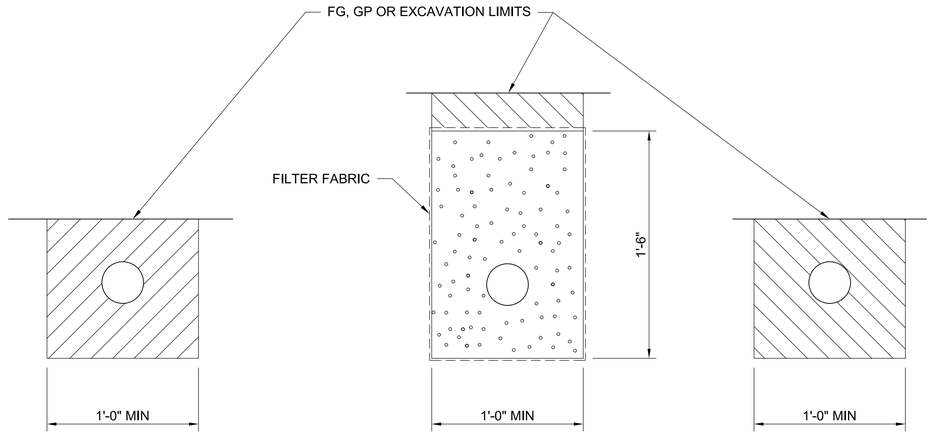

2RW-20 / RW-20 **UNPERFORATED OUTLET PIPE/CLEANOUT PIPE FOR UNDERDRAIN**
SCALE: NTS

NOTES

1. LOCATE UNDERDRAIN BEHIND BOTTOM LEVEL OF WELDED WIRE MATS WHENEVER POSSIBLE, OR AT ELEVATION NEEDED TO DRAIN.
2. PLACE PERFORATED PIPE UNDERDRAIN OF MINIMUM 8"Ø CORRUGATED HDPE.
3. MAXIMUM SPACING OF OUTLET PIPES AND CLEANOUT PIPES IS 200 FEET.
4. AT SAGS IN PROFILE OF UNDERDRAIN, INSTALL OUTLET PIPE FOR EACH DIRECTION OF FLOW.
5. OVER-EXCAVATION WITH TWO LAYERS OF GEOGRID FILL, SPACED VERTICALLY 18 INCHES.

LEGEND

- STRUCTURE EXCAVATION
- STRUCTURE BACKFILL
- PERMEABLE MATERIAL

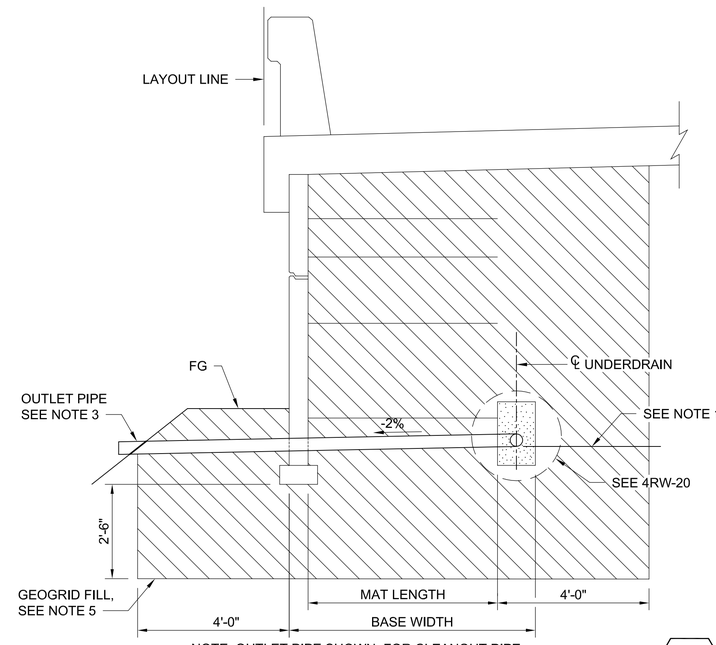

NOTE: OUTLET PIPE SHOWN, FOR CLEANOUT PIPE DETAILS SEE ROADWAY SECTION.

SLOPING FINISHED GRADE

3RW-20 / RW-20 **LIMITS OF BACKFILL**
SCALE: 1/2"=1'-0"

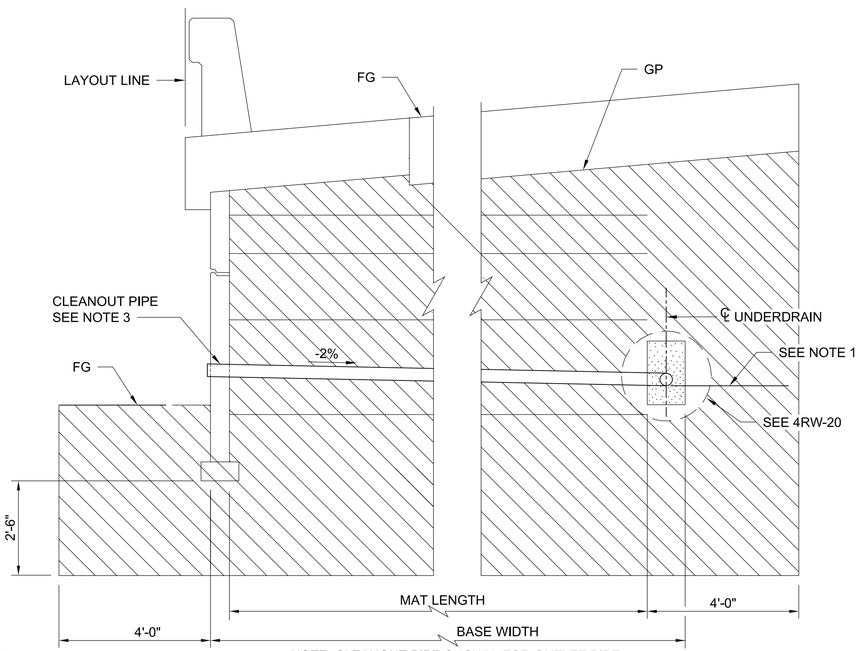

NOTE: CLEANOUT PIPE SHOWN, FOR OUTLET PIPE DETAILS SEE SLOPING FINISHED GRADE.

ROADWAY SECTION

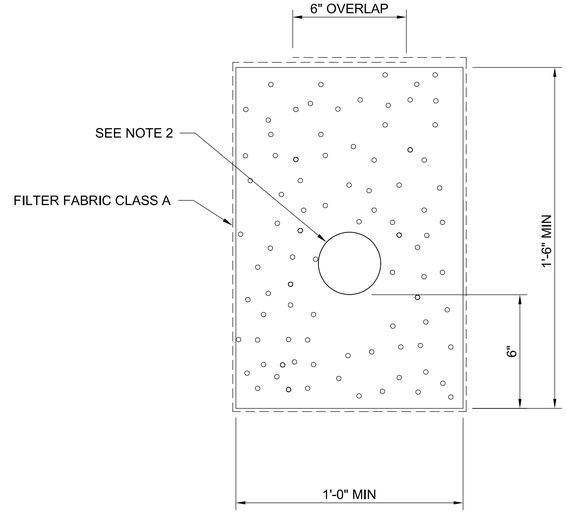

4RW-20 / RW-20 **UNDERDRAIN DETAIL**
SCALE: NTS

SHEET ____ OF ~~400~~

NO.	DATE	DRAWN	REVISIONS -	CHK'D	APP'D
			NOT FOR CONSTRUCTION		

NO.	DATE	DRAWN	REVISIONS -	CHK'D	APP'D
			80% DESIGN		

Jacobs
300 NEWPORT CENTER DRIVE, SUITE 500
NEWPORT BEACH, CA
T: (949) 224-7502
F: (949) 224-7501

SCALE:	AS SHOWN
DRAWN:	O. VEJAR
CHECKED:	B. DENG
DESIGNED:	L. DIECKMANN
ENGINEER / ARCHITECT	B. DENG

TERMINAL ISLAND GRADE SEPARATION

MECHANICALLY STABILIZED EMBANKMENT DETAIL NO.5

THE PORT OF LOS ANGELES
ENGINEERING DIVISION
425 S. PALOS VERDES STREET SAN PEDRO CA 90731-3309

DRAWING NUMBER	SHEET NUMBER
1-3497	RW-20

C:\Users\Zucchi\DCVACCDocs\Jacobs\US CA_d3391901_POLA Terminal Island GS\Project Files\30 PROJECT DATA\PID\STRUCTURE\Drawings\1-3497 RW-20.dwg, 8/26/2025 11:56:58 AM
POLAPRO1_041020_BWD

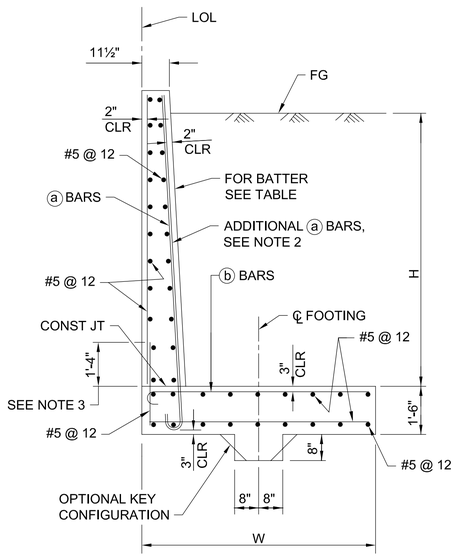

1RW-21 / RW-21 SPREAD FOOTING SECTION
SCALE: NTS

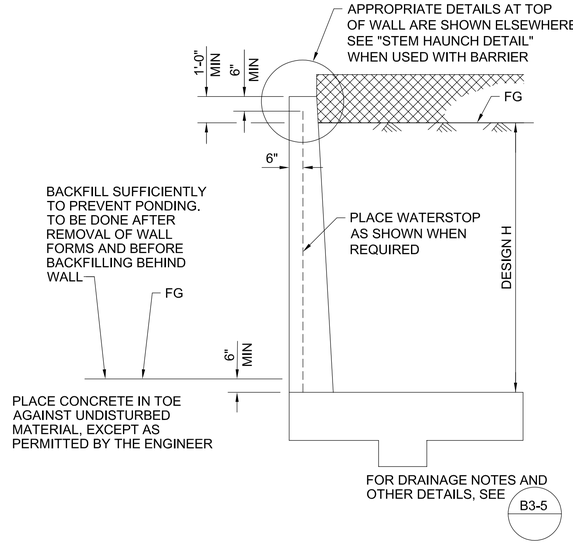

2RW-21 / RW-21 DESIGN SECTION
SCALE: NTS

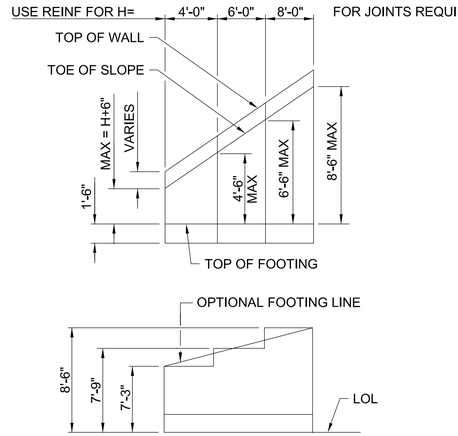

3RW-21 / RW-21 TYPICAL LAYOUT EXAMPLE
SCALE: NTS

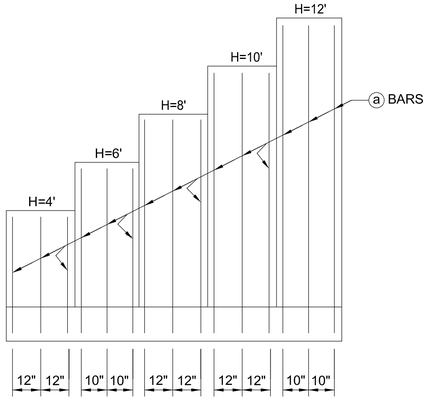

4RW-21 / RW-21 ELEVATION
SCALE: NTS

SYMBOLS:

SER - SERVICE LIMIT STATE I
STR - STRENGTH LIMIT STATE I
EXT I - EXTREME EVENT LIMIT STATE I
EXT II - EXTREME EVENT LIMIT STATE II
B' - EFFECTIVE FOOTING WIDTH (FT)
Q'_o - NET BEARING STRESS (KSF), OG ASSUMED TO BE FG AT TOE
Q_o - GROSS UNIFORM BEARING STRESS (KSF)

TABLE OF REINFORCING STEEL, DIMENSIONS AND DATA		
DESIGN H	4'	6'
W	6'-4"	6'-6"
BATTER	NONE	1/4:12
ⓐ BARS	#7 @ 12	#7 @ 12
ⓑ BARS	#5 @ 6	#5 @ 6
SER: B', q'_o	5.0, 1.6	4.6, 2.1
STR: B', q_o	3.6, 2.4	2.5, 3.3
EXT I: B', q_o	5.3, 1.3	5.0, 1.9
EXT II: B', q_o	2.5, 2.5	3.1, 2.8

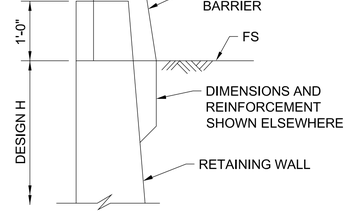

5RW-21 / RW-21 STEM HAUNCH DETAIL
SCALE: NTS

DESIGN CONDITIONS:

DESIGN H MAY BE EXCEEDED BY 6" BEFORE GOING TO THE NEXT SIZE. SPECIAL FOOTING DESIGN IS REQUIRED WHERE FOUNDATION MATERIAL IS INCAPABLE OF SUPPORTING BEARING STRESS LISTED IN THE TABLE.

DESIGN NOTES:	
DESIGN:	AASHTO LRFD BRIDGE DESIGN SPECIFICATIONS, 8TH EDITION WITH CALIFORNIA AMENDMENTS
LS:	VARIED SURCHARGE ON LEVEL GROUND SURFACE
DC:	STEM ARCHITECTURAL TREATMENT OF THICKNESS UP TO 2" OF CONCRETE (25 PSF) CONSIDERED
CT:	54 KIP TRANSVERSE FORCE APPLIED AT HE = 32", DISTRIBUTED OVER 10 FEET AT THE TOP OF WALL AND 1 : 1 DISTRIBUTION DOWN AND OUTWARD. DISTRIBUTION BELOW FOOTING TAKEN NO LESS THAN 40'.
SEISMIC:	k_h = 0.21 k_v = 0.0
SOIL:	Ø = 34° γ = 120 PCF
REINFORCED CONCRETE:	f'c = 3,600 PSI fy = 60,000 PSI
LOAD COMBINATIONS AND LIMIT STATES:	
SERVICE I	Q = 1.00DC+1.00EV+1.00EH+1.00LS
STRENGTH I	Q = αDC+βEV+ηEH+1.75LS
EXTREME I	Q = 1.00DC+1.00EV+1.00EH+1.00EQD+1.00EQE
EXTREME II	Q = 1.00DC+1.00EV+1.00EH+1.00CT

WHERE:

Q:	FORCE EFFECTS
α:	1.25 OR 0.90, WHICHEVER CONTROLS DESIGN
β:	1.35 OR 1.00, WHICHEVER CONTROLS DESIGN
η:	1.50 OR 0.90, WHICHEVER CONTROLS DESIGN
DC:	DEAD LOAD OF STRUCTURE COMPONENTS
EH:	HORIZONTAL EARTH FILL PRESSURE
EV:	VERTICAL EARTH PRESSURE FROM EARTH FILL WEIGHT
LS:	LIVE LOAD SURCHARGE
EQE:	SEISMIC EARTH PRESSURE
EQD:	SOIL AND STRUCTURAL AND NONSTRUCTURAL COMPONENTS INERTIA
CT:	VEHICULAR COLLISION FORCE

NOTES:

1. AT ⓐ MMBARS:
   H ≤ 6', NO SPLICES ARE ALLOWED WITHIN 1'-8" ABOVE THE TOP OF FOOTING.
   H > 6', NO SPLICES ARE ALLOWED WITHIN H/4 ABOVE THE TOP OF FOOTING.
2. PROVIDE #6 @ 8" ⓐ BARS IN ADDITION TO TABULATED ⓐ BARS OVER A DISTANCE OF 8'-0" MEASURED FROM ALL EXPANSION JOINTS, BEGIN WALL AND END WALL LOCATIONS.
3. NON-CONTACT LAP SPLICE LENGTH. MAXIMUM TRANSVERSE SPACING OF SPLICE REBARS TO BE 3 INCHES.

SHEET ____ OF 400

NO.	DATE	DRAWN	REVISIONS -	CHK'D	APP'D
			NOT FOR CONSTRUCTION		

NO.	DATE	DRAWN	REVISIONS -	CHK'D	APP'D
			80% DESIGN		

Jacobs
3600 MICHELSON DRIVE, SUITE 500
IRVINE, CA 92612
T: (949) 224-7500
F: (949) 224-7501

SCALE:	AS SHOWN
DRAWN:	N. MORALES
CHECKED:	B. DENG
DESIGNED:	L. DIECKMANN
ENGINEER / ARCHITECT	B. DENG

TERMINAL ISLAND GRADE SEPARATION

RETAINING WALL TYPE 5 DETAILS

THE PORT OF LOS ANGELES
ENGINEERING DIVISION
425 S. PALOS VERDES STREET SAN PEDRO CA 90731-3309

DRAWING NUMBER	SHEET NUMBER
1-3497	RW-21

POLAPRO1_042023_BWD

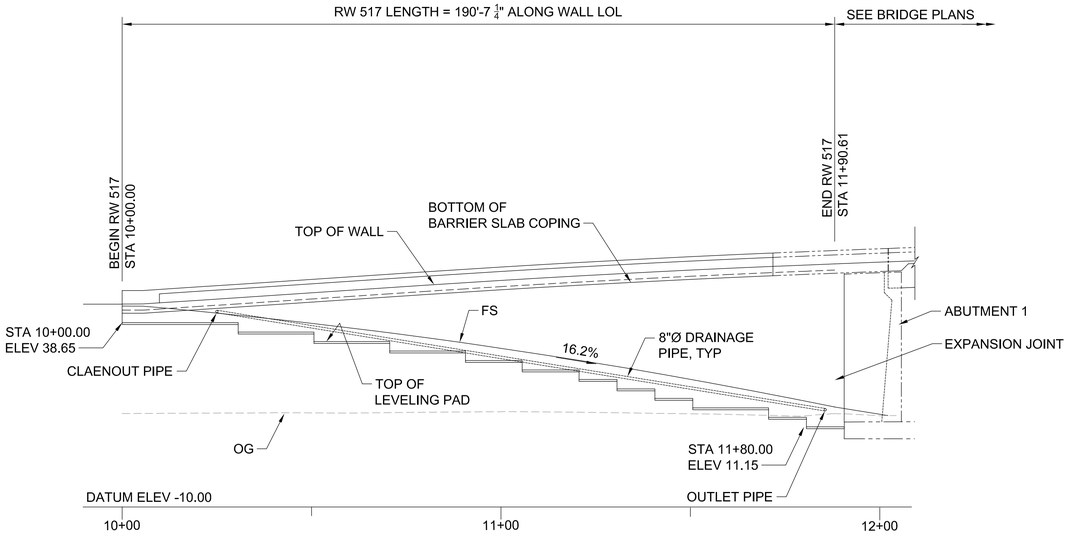

1RW-22 / RW-22 RW 517 MIRRORED DEVELOPED DRAINAGE ELEVATION
SCALE: 1"=20'

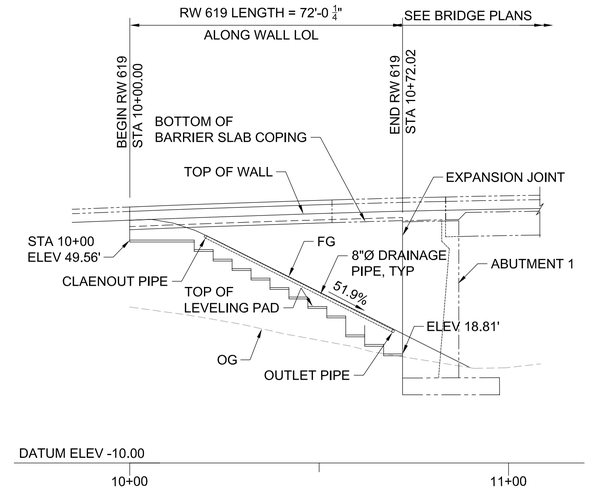

2RW-22 / RW-22 RW 619 DEVELOPED DRAINAGE ELEVATION
SCALE: 1"=20'

NOTES

1. FOR PIPE LOCATION AND ELEVATION ALONG DRAINAGE LINE, SEE "DRAINAGE PIPE LOCATION" TABLE.
2. ELEVATIONS ARE GIVEN AT INVERT OF PIPE.
3. USE PERFORATED 8" DIA. HDPE PIPE FOR DRAINAGE LINE.
4. USE UNPERFORATED 4" DIA. PVC PIPE FOR CLEANOUT PIPE AND OUTLET PIPE.

DRAINAGE PIPE LOCATION

LOCATION NUMBER	STATION	ELEVATION
1	0.67' RT STA 10+25.00 "RW 517" LOL	41.30'
2	9.67' RT STA 10+25.00 "RW 517" LOL	41.12'
3	33.67' RT STA 11+88.11 "RW 517" LOL	15.62'
4	0.67' RT STA 11+88.11 "RW 517" LOL	14.96'
5	0.67' LT STA 10+20.00 "RW 619" LOL	49.58'
6	9.67' LT STA 10+20.00 "RW 619" LOL	49.40'
7	26.67' LT STA 10+69.52 "RW 619" LOL	24.47'
8	0.67' LT STA 10+69.52 "RW 619" LOL	23.89'

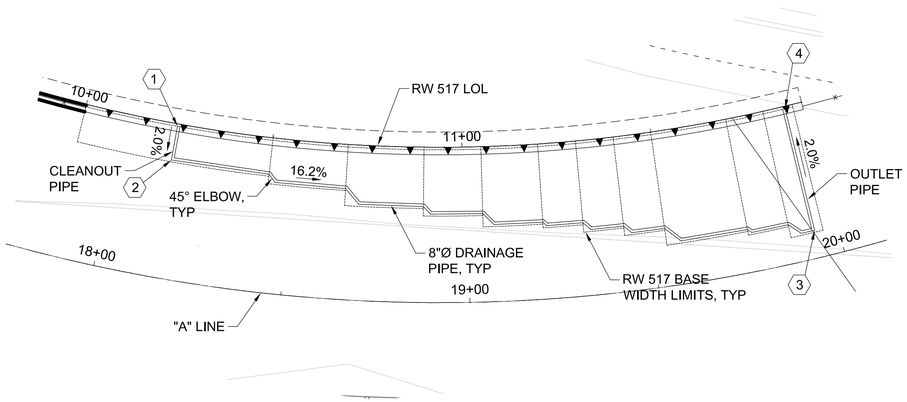

2RW-22 / RW-22 RW 517 DRAINAGE PLAN
SCALE: 1"=20'

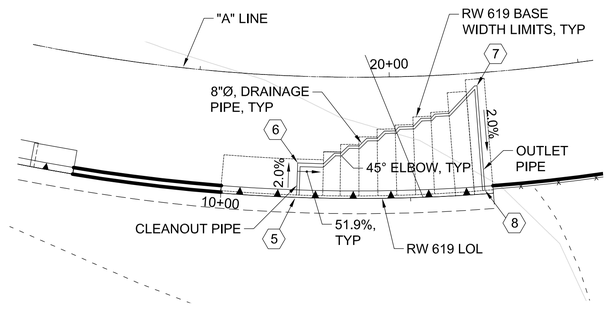

4RW-22 / RW-22 RW 619 DRAINAGE PLAN
SCALE: 1"=20'

20' 0' 20' 40'
SCALE: 1" = 20'

SHEET ####OF 400

NO.	DATE	DRAWN	REVISIONS -	CHK'D	APP'D
			NOT FOR CONSTRUCTION		

NO.	DATE	DRAWN	REVISIONS -	CHK'D	APP'D
			80% DESIGN		

Jacobs
300 NEWPORT CENTER DRIVE, SUITE 500
NEWPORT BEACH, CA
T: (949) 224-7500
F: (949) 224-7501

SCALE: AS SHOWN
DRAWN: P. ZUCCHI
CHECKED: B. DENG
DESIGNED: L. DIECKMANN
ENGINEER / ARCHITECT
B. DENG

TERMINAL ISLAND GRADE SEPARATION

DRAINAGE DETAILS NO. 1

THE PORT OF LOS ANGELES
ENGINEERING DIVISION
425 S. PALOS VERDES STREET SAN PEDRO CA 90731-3309

DRAWING NUMBER 1-3497
SHEET NUMBER RW-22

POLAPROT_040320_BWD

C:\Users\kpope1\DC\ACCDocs\Jacobs\US CA_d3391901_POLA Terminal Island GS\Project Files\30 PROJECT DATA\PID\STRUCTURE\Drawings\1-3497 RW-22.dwg, 8/15/2025 3:11:33 PM

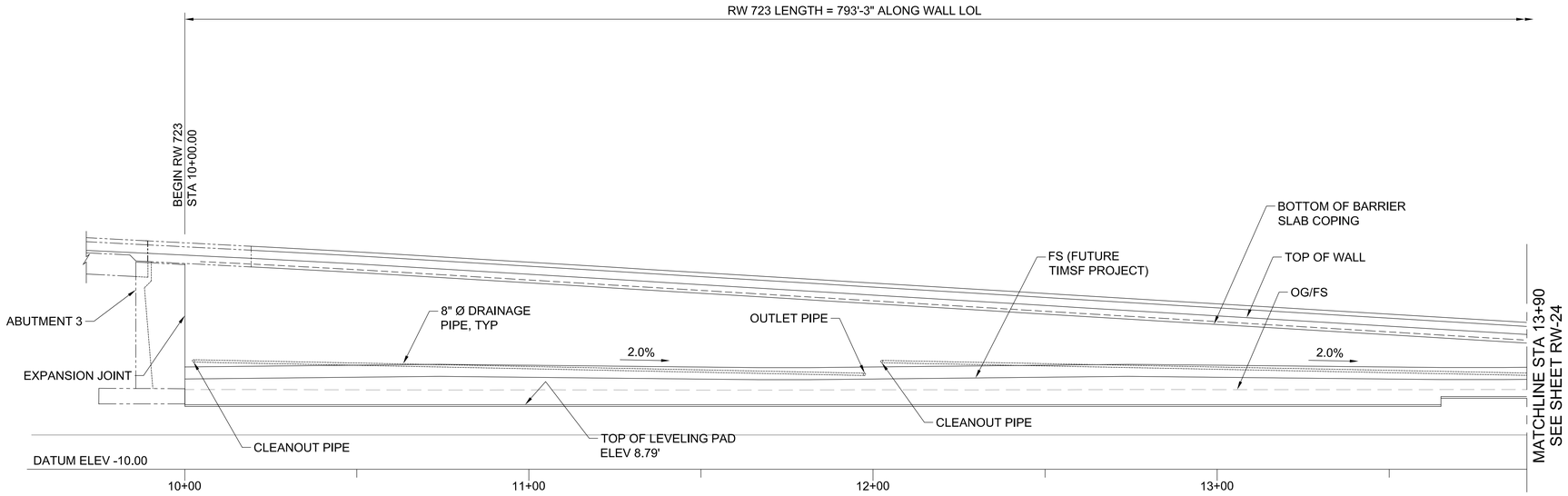

1RW-23
RW-23

PARTIAL - RW 723 MIRRORED DRAINAGE ELEVATION

SCALE: 1"=20'

NOTES

1. FOR PIPE LOCATION AND ELEVATION ALONG DRAINAGE LINE, SEE "DRAINAGE PIPE LOCATION" TABLE.
2. ELEVATIONS ARE GIVEN AT INVERT OF PIPE.
3. USE PERFORATED 8" DIA. HDPE PIPE FOR DRAINAGE LINE.
4. USE UNPERFORATED 4" DIA. PVC PIPE FOR CLEANOUT PIPE AND OUTLET PIPE.

DRAINAGE PIPE LOCATION

LOCATION NUMBER	STATION	ELEVATION
9	0.67' RT STA 10+02.50 "RW 723" LOL	21.83'
10	33.67' RT STA 10+02.50 "RW 723" LOL	21.17'
11	25.67' RT STA 11+97.50 "RW 723" LOL	17.27'
12	0.67' RT STA 12+02.50 "RW 723" LOL	16.77'
13	0.67' RT STA 12+02.50 "RW 723" LOL	21.47'
14	23.67' RT STA 12+02.50 "RW 723" LOL	20.97'

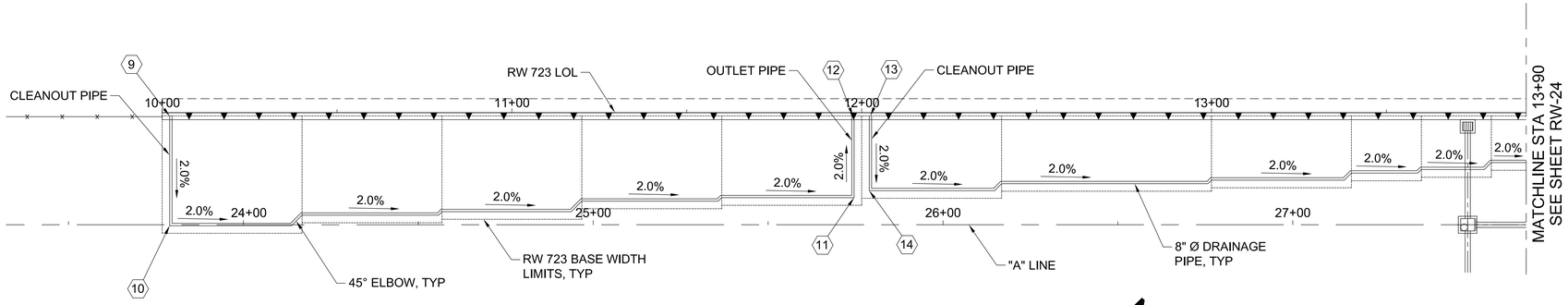

2RW-23
RW-23

PARTIAL - RW 723 DRAINAGE PLAN

SCALE: 1"=20'

SCALE: 1" = 20'

SHEET ####OF 400

NO.	DATE	DRAWN	REVISIONS -	CHK'D	APP'D
			NOT FOR CONSTRUCTION		

NO.	DATE	DRAWN	REVISIONS -	CHK'D	APP'D
			80% DESIGN		

Jacobs
2600 MICHELSON DRIVE, SUITE 500
IRVINE, CA 92612
T: (949) 224-7500
F: (949) 224-7501

SCALE:	AS SHOWN
DRAWN:	P. ZUCCHI
CHECKED:	B. DENG
DESIGNED:	L. DIECKMANN
ENGINEER / ARCHITECT	B. DENG

TERMINAL ISLAND GRADE SEPARATION

DRAINAGE DETAILS NO. 2

THE PORT OF LOS ANGELES
ENGINEERING DIVISION
425 S. PALOS VERDES STREET SAN PEDRO CA 90731-3309

DRAWING NUMBER: 1-3497

SHEET NUMBER: RW-23

C:\Users\kpope1\DC\ACCDocs\Jacobs\US CA_d3391901_POLA Terminal Island GS\Project Files\30 PROJECT DATA\PID\STRUCTURES\Drawings\1-3497 RW-23.dwg, 8/15/2025 2:25:41 PM
POLAPRO1_041020_BWD

NOTES

1. FOR PIPE LOCATION AND ELEVATION ALONG DRAINAGE LINE, SEE "DRAINAGE PIPE LOCATION" TABLE.
2. ELEVATIONS ARE GIVEN AT INVERT OF PIPE.
3. USE PERFORATED 8" DIA. HDPE PIPE FOR DRAINAGE LINE.
4. USE UNPERFORATED 4" DIA. PVC PIPE FOR CLEANOUT PIPE AND OUTLET PIPE.

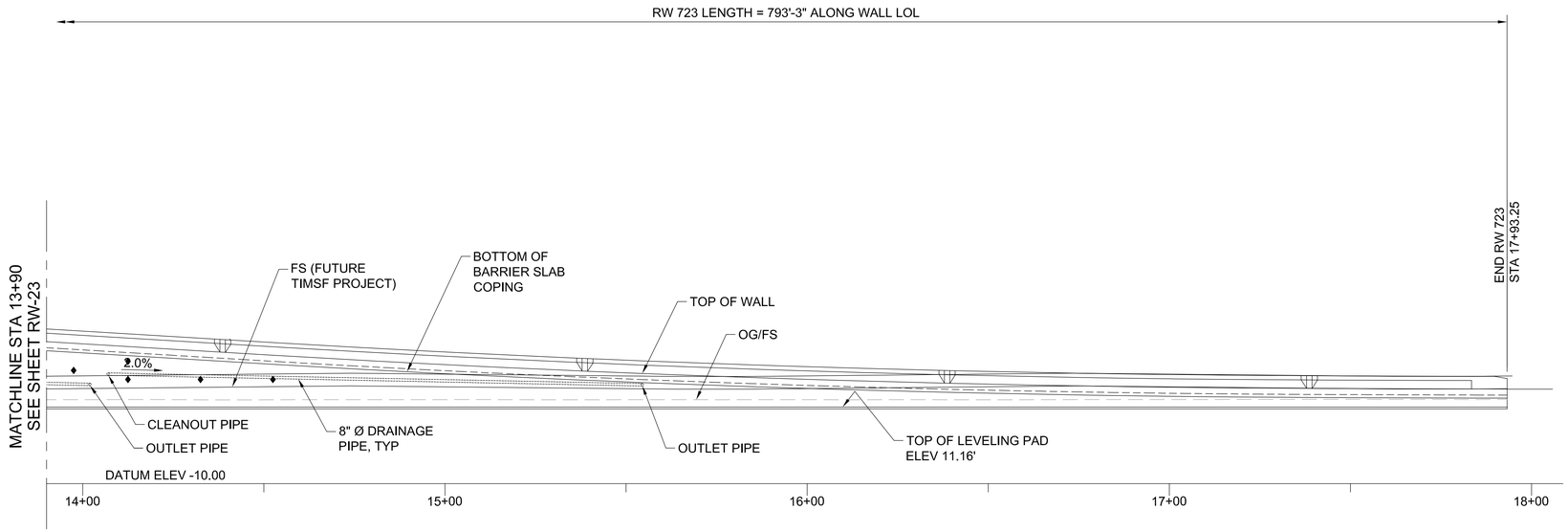

1RW-23 / RW-23 PARTIAL - RW 723 MIRRORED DRAINAGE ELEVATION
SCALE: 1"=20'

DRAINAGE PIPE LOCATION		
LOCATION NUMBER	STATION	ELEVATION
15	15.67' RT STA 13+97.50 "RW 723" LOL	17.07'
16	0.67' RT STA 13+97.50 "RW 723" LOL	16.77'
17	0.67' RT STA 14+02.50 "RW 723" LOL	20.21'
18	15.67' RT STA 14+02.50 "RW 723" LOL	19.91'
19	9.67' RT STA 15+50.00 "RW 723" LOL	16.96'
20	0.67' RT STA 15+50.00 "RW 723" LOL	16.78'

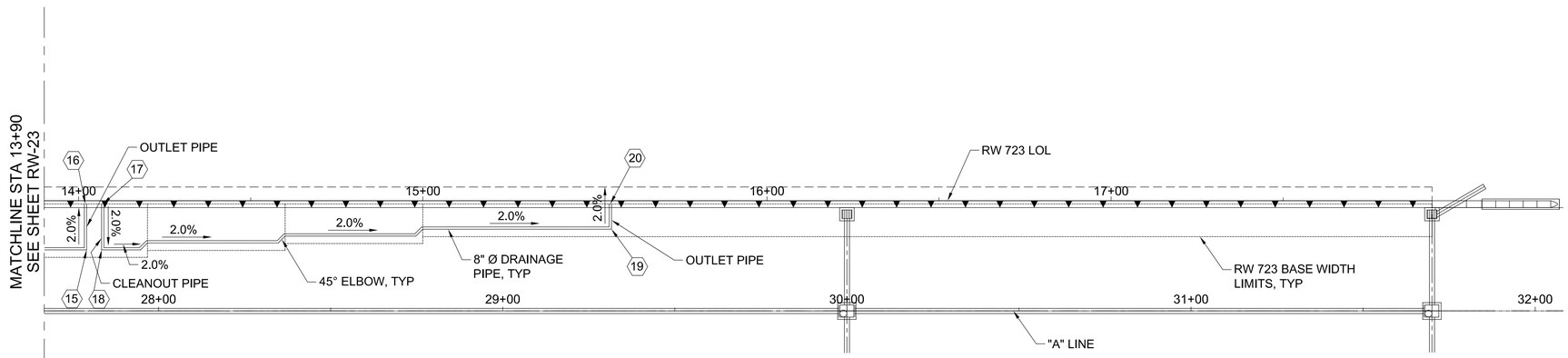

2RW-23 / RW-23 PARTIAL - RW 723 DRAINAGE PLAN
SCALE: 1"=20'

20' 0' 20' 40'
SCALE: 1" = 20'

SHEET ---- OF 400

NO.	DATE	DRAWN	REVISIONS -	CHK'D	APP'D	NO.	DATE	DRAWN	REVISIONS -	CHK'D	APP'D
			NOT FOR CONSTRUCTION						80% DESIGN		

Jacobs
2600 MICHELSON DRIVE, SUITE 500
IRVINE, CA 92612
T: (949) 224-7500
F: (949) 224-7501

SCALE: AS SHOWN
DRAWN: K. POPE
CHECKED: B. DENG
DESIGNED: L. DIECKMANN
ENGINEER / ARCHITECT
B. DENG

TERMINAL ISLAND GRADE SEPARATION
DRAINAGE DETAILS NO. 3

THE PORT OF LOS ANGELES
ENGINEERING DIVISION
425 S. PALOS VERDES STREET SAN PEDRO CA 90731-3309

DRAWING NUMBER 1-3497
SHEET NUMBER RW-24

C:\Users\kpope1\DC\ACCDocs\Jacobs\US CA_d3391901_POLA Terminal Island GS\Project Files\30 PROJECT DATA\PID\STRUCTURE\Drawings\1-3497 RW-24.dwg, 8/15/2025 2:26:21 PM

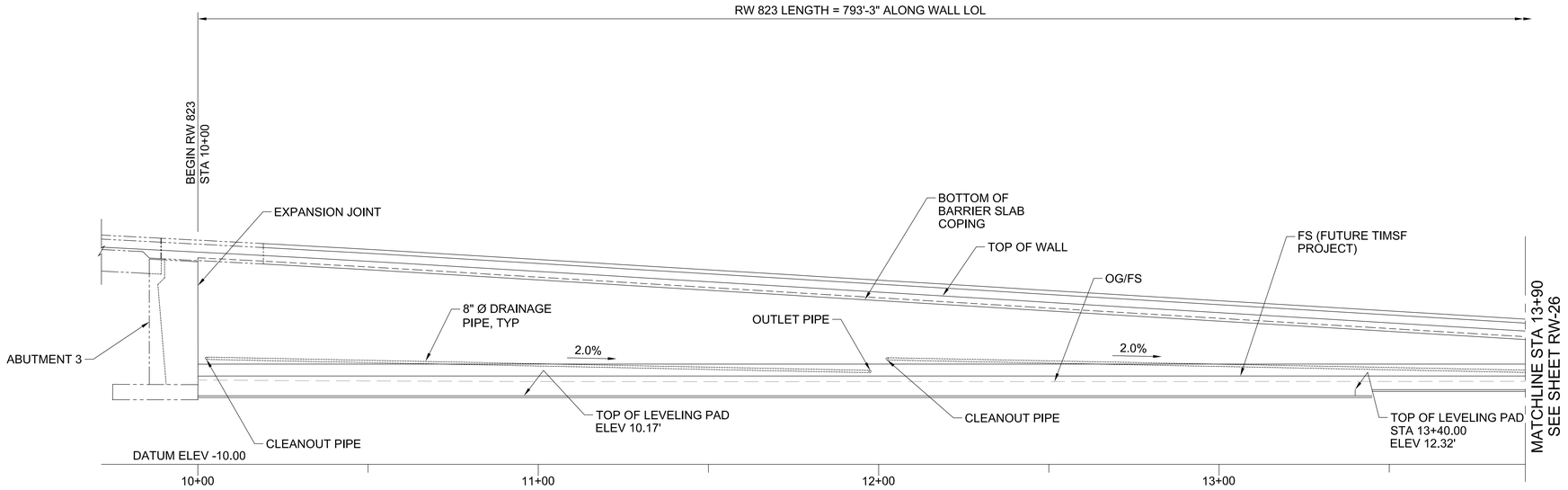

1RW-25
RW-25

RW 823 DRAINAGE ELEVATION

SCALE: 1"=20'

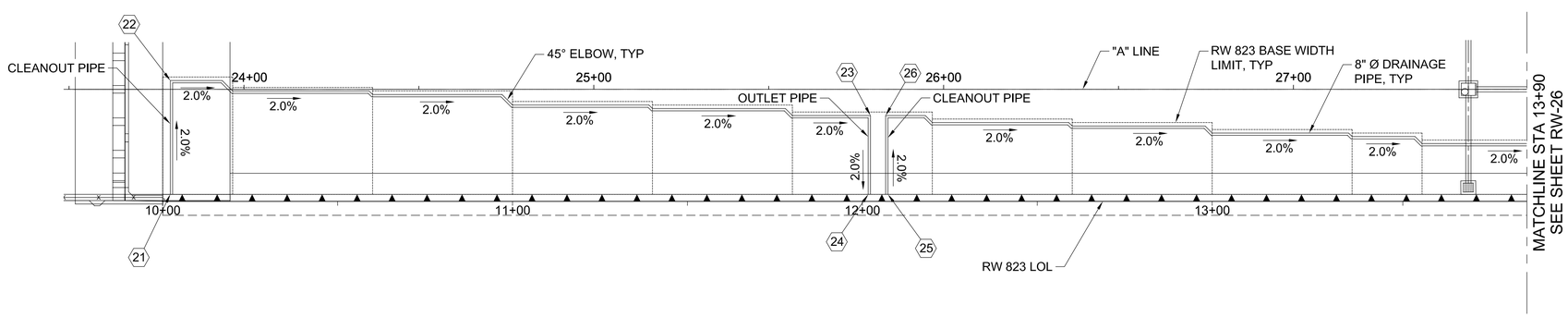

2RW-25
RW-25

RW 823 DRAINAGE PLAN

SCALE: 1"=20'

N

20' 0' 20' 40'

SCALE: 1" = 20'

NOTES

1. FOR PIPE LOCATION AND ELEVATION ALONG DRAINAGE LINE, SEE "DRAINAGE PIPE LOCATION" TABLE.
2. ELEVATIONS ARE GIVEN AT INVERT OF PIPE.
3. USE PERFORATED 8" DIA. HDPE PIPE FOR DRAINAGE LINE.
4. USE UNPERFORATED 4" DIA. PVC PIPE FOR CLEANOUT PIPE AND OUTLET PIPE.

DRAINAGE PIPE LOCATION

LOCATION NUMBER	STATION	ELEVATION
21	0.67' LT STA 10+02.50 "RW 823" LOL	21.52'
22	33.67' LT STA 10+02.50 "RW 823" LOL	20.86'
23	23.67' LT STA 11+97.50 "RW 823" LOL	16.96'
24	0.67' LT STA 11+97.50 "RW 823" LOL	16.50'
25	0.67' LT STA 12+02.50 "RW 823" LOL	21.14'
26	23.67' LT STA 12+02.50 "RW 823" LOL	20.68'

SHEET ---- OF 400

NO.	DATE	DRAWN	REVISIONS -	CHK'D	APP'D
			NOT FOR CONSTRUCTION		

NO.	DATE	DRAWN	REVISIONS -	CHK'D	APP'D
			80% DESIGN		

Jacobs
2600 MICHELSON DRIVE, SUITE 500
IRVINE, CA 92612
T: (949) 224-7500
F: (949) 224-7501

SCALE: AS SHOWN
DRAWN: P. ZUCCHI
CHECKED: B. DENG
DESIGNED: L. DIECKMANN
ENGINEER / ARCHITECT
B. DENG

TERMINAL ISLAND GRADE SEPARATION

DRAINAGE DETAILS NO. 4

THE PORT OF LOS ANGELES
ENGINEERING DIVISION
425 S. PALOS VERDES STREET SAN PEDRO CA 90731-3309

DRAWING NUMBER 1-3497
SHEET NUMBER RW-25

C:\Users\kpope1\DC\ACCDocs\Jacobs\US CA_d3391901_POLA Terminal Island GS\Project Files\30 PROJECT DATA\PID\STRUCTURE\Drawings\1-3497 RW-25.dwg, 8/15/2025 2:33:37 PM

NOTES

1. FOR PIPE LOCATION AND ELEVATION ALONG DRAINAGE LINE, SEE "DRAINAGE PIPE LOCATION" TABLE.
2. ELEVATIONS ARE GIVEN AT INVERT OF PIPE.
3. USE PERFORATED 8" DIA. HDPE PIPE FOR DRAINAGE LINE.
4. USE UNPERFORATED 4" DIA. PVC PIPE FOR CLEANOUT PIPE AND OUTLET PIPE.

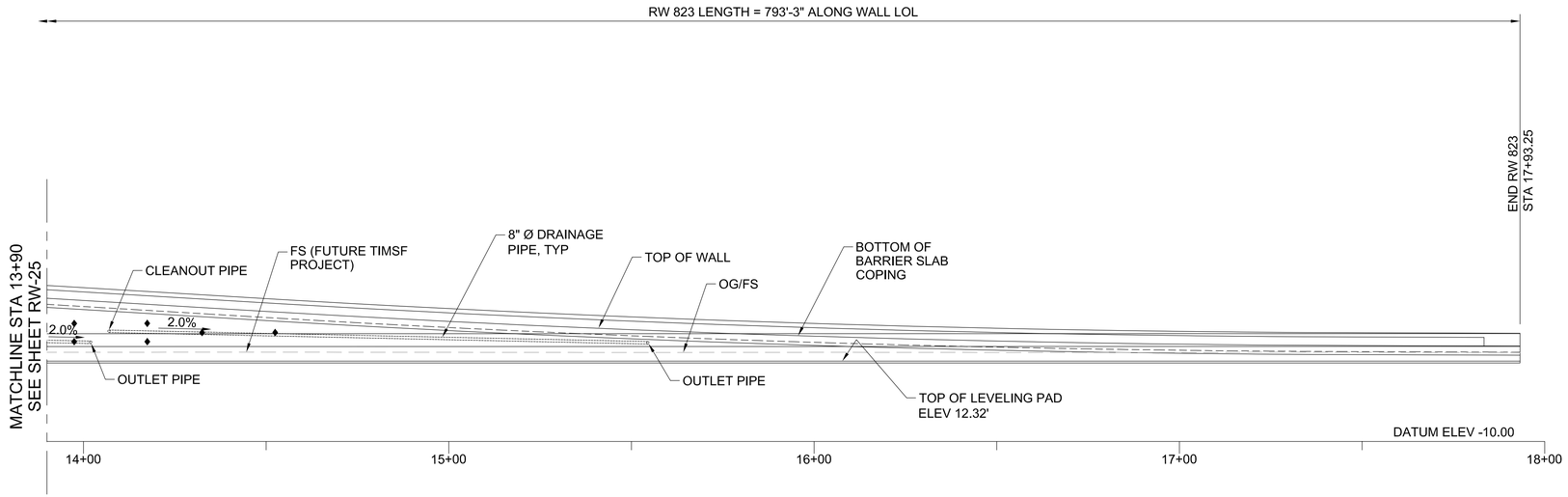

1RW-26 / RW-26 **RW 823 DRAINAGE ELEVATION**
SCALE: 1"=20'

DRAINAGE PIPE LOCATION		
LOCATION NUMBER	STATION	ELEVATION
27	15.67' LT STA 13+97.50 "RW823" LOL	16.78'
28	0.67' LT STA 13+97.50 "RW 823" LOL	16.48'
29	0.67' LT STA 14+02.50 "RW 823" LOL	20.08'
30	13.67' LT STA 14+02.50 "RW 823" LOL	19.82'
31	9.67' LT STA 15+60.00 "RW 823" LOL	16.67'
32	0.67' LT STA 15+60.00 "RW 823" LOL	16.49'

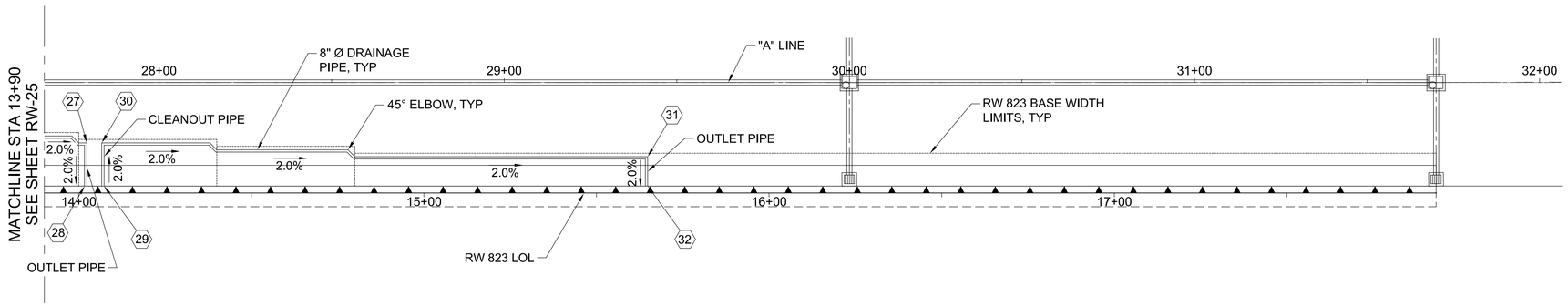

2RW-26 / RW-26 **RW 823 DRAINAGE PLAN**
SCALE: 1"=20'

20' 0' 20' 40'
SCALE: 1" = 20'

SHEET ____ OF 400

NO.	DATE	DRAWN	REVISIONS -	CHK'D	APP'D
			NOT FOR CONSTRUCTION		

NO.	DATE	DRAWN	REVISIONS -	CHK'D	APP'D
			80% DESIGN		

Jacobs
2600 MICHELSON DRIVE, SUITE 500
IRVINE, CA 92612
T: (949) 224-7500
F: (949) 224-7501

SCALE:	AS SHOWN
DRAWN:	P. ZUCCHI
CHECKED:	B. DENG
DESIGNED:	L. DIECKMANN
ENGINEER / ARCHITECT	B. DENG

TERMINAL ISLAND GRADE SEPARATION

DRAINAGE DETAILS NO. 5

THE PORT OF LOS ANGELES
ENGINEERING DIVISION
425 S. PALOS VERDES STREET SAN PEDRO CA 90731-3309

DRAWING NUMBER 1-3497

SHEET NUMBER RW-26

C:\Users\kpope1\DC\ACCDocs\Jacobs\US CA_d3391901_POLA Terminal Island GS\Project Files\30 PROJECT DATA\PID\STRUCTURE\Drawings\1-3497 RW-26.dwg, 8/15/2025 2:32:04 PM
POLAPRO1_041020_BWD

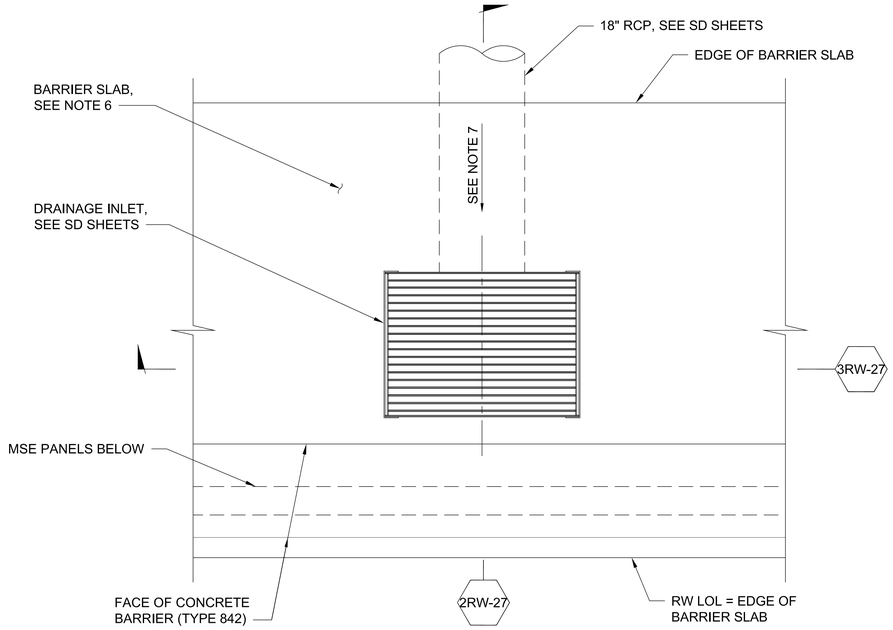

1RW-27 / RW-27 **PARTIALPLAN**
SCALE: 3/4" = 1'-0"

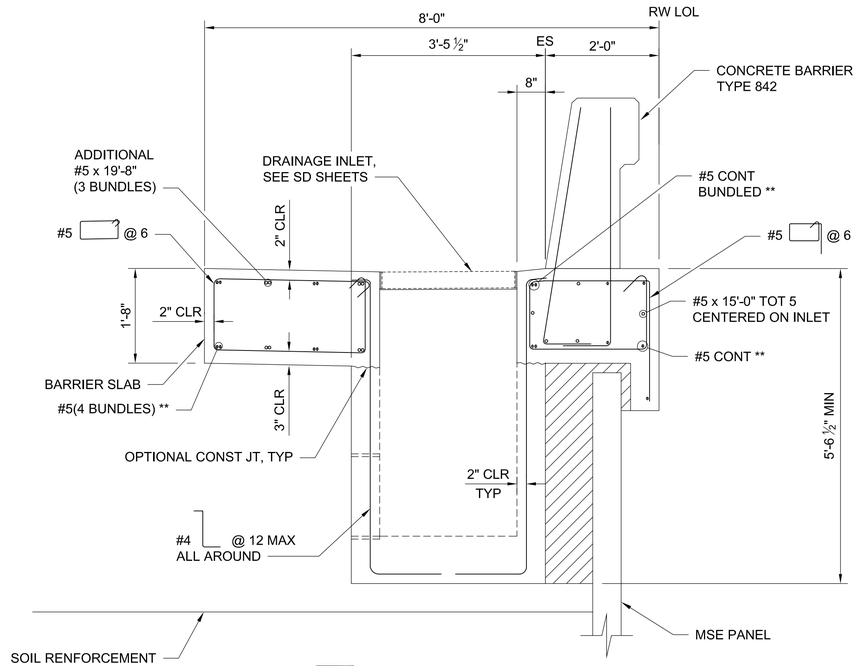

2RW-27 / RW-27 **SECTION**
SCALE: 3/4" = 1'-0"

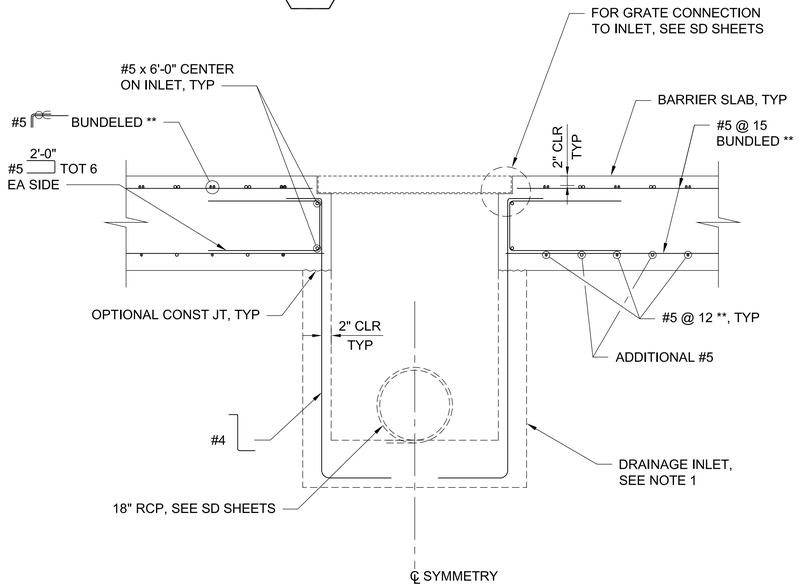

3RW-27 / RW-27 **SECTION**
SCALE: 3/4" = 1'-0"

NOTES:

1. DRAINAGE INLET REINFORCEMENT NOT SHOWN.
2. FOR CONCRETE BARRIER DETAILS AND REINFORCEMENT NOT SHOWN, SEE B11-79 AND B11-80 .
3. FOR BARRIER SLAB DETAILS NOT SHOWN, SEE SHEET RW-15.
4. FOR DRAINAGE SYSTEM LOCATION AND DETAILS, SEE SD SHEETS. PROVIDE WATERTIGHT CONNECTION BETWEEN BOTTOM OF INLET AND DRAINAGE PIPE.
5. ADJUST DRAINAGE INLET TO BE CENTERED ON WALL VERTICAL PANEL JOINT.
6. ADJUST REINFORCEMENT AT INLET DEPRESSION TO MAINTAIN A MINIMUM CONCRETE COVER OF 2".
7. FOR CROSS SLOPE, SEE ROADWAY PLANS.
8. WALL MANUFACTURER TO PROVIDE DETAILS FOR SOIL REINFORCEMENT WHERE INTERRUPTED BY DRAINAGE INLET.
9. FOR BARRIER SLAB REINFORCEMENT DETAILS AT DRAINAGE INLET, SEE RW-28 SHEET.

LEGEND:

- ** INDICATES BARRIER SLAB REINFORCEMENT
- ○C INDICATES BUNDLED BARS
- ∘ ADDITIONAL BARRIER REINFORCEMENT
- EXPANDED POLYSTYRENE

SHEET ---- OF 400

NO.	DATE	DRAWN	REVISIONS -	CHK'D	APP'D
			NOT FOR CONSTRUCTION		

NO.	DATE	DRAWN	REVISIONS -	CHK'D	APP'D
			80% DESIGN		

Jacobs
2600 MICHELSON DRIVE, SUITE 500
IRVINE, CA 92612
T: (949) 224-7500
F: (949) 224-7501

SCALE:	AS SHOWN
DRAWN:	N. MORALES
CHECKED:	B. DENG
DESIGNED:	L. DIECKMANN
ENGINEER / ARCHITECT	B. DENG

TERMINAL ISLAND GRADE SEPARATION

DRAINAGE INLET DETAILS NO.1

THE PORT OF LOS ANGELES
ENGINEERING DIVISION
425 S. PALOS VERDES STREET SAN PEDRO CA 90731-3309

DRAWING NUMBER	SHEET NUMBER
1-3497	RW-27

C:\Users\kpope1\DC\ACCDocs\Jacobs\US CA_d3391901_POLA Terminal Island GS\Project Files\30 PROJECT DATA\PID\STRUCTURE\Drawings\1-3497 RW-27.dwg, 8/15/2025 2:32:56 PM
POLAPRO1_04-2023_BWD

NOTES:

1. FOR NOTES, SEE RW-27 SHEET.

LEGEND:

** INDICATES BARRIER SLAB REINFORCEMENT

ꝏ INDICATES BUNDLED BARS

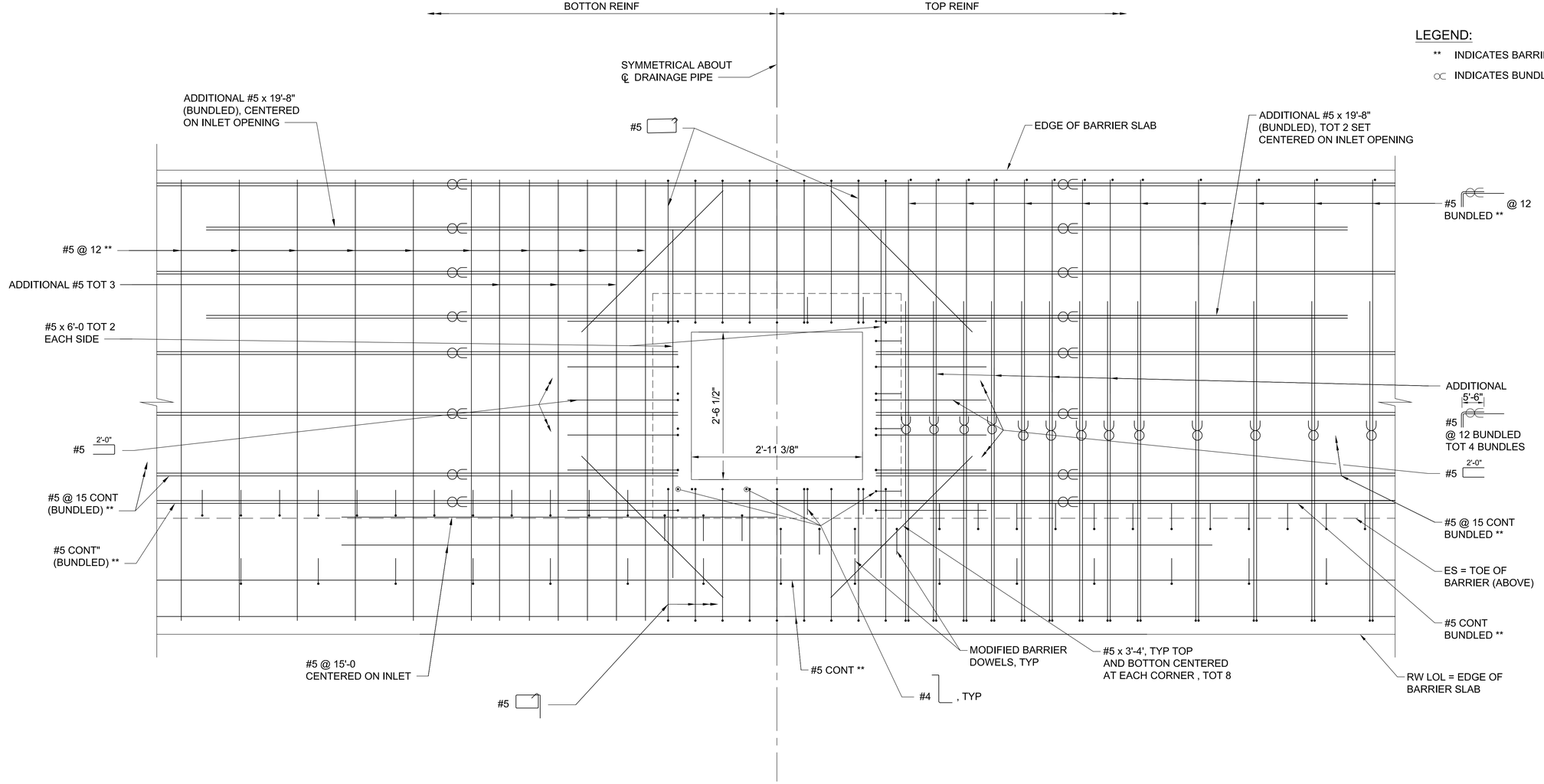

1RW-28
RW-28

PARTIAL PLAN - BARRIER SLAB REINFORCEMENT AT DRAINAGE INLET

SCALE: 1" = 1'-0"

SHEET ____ OF 400

NO.	DATE	DRAWN	REVISIONS -	CHK'D	APP'D
			NOT FOR CONSTRUCTION		

NO.	DATE	DRAWN	REVISIONS -	CHK'D	APP'D
			80% DESIGN		

Jacobs
3600 MICHELSON DRIVE, SUITE 500
IRVINE, CA 92612
T: (949) 224-7500
F: (949) 224-7501

SCALE:	AS SHOWN
DRAWN:	N. MORALES
CHECKED:	B. DENG
DESIGNED:	L. DIECKMANN
ENGINEER / ARCHITECT	B. DENG

TERMINAL ISLAND GRADE SEPARATION

DRAINAGE INLET DETAILS NO. 2

THE PORT OF LOS ANGELES
ENGINEERING DIVISION
425 S. PALOS VERDES STREET SAN PEDRO CA 90731-3309

DRAWING NUMBER: 1-3497

SHEET NUMBER: RW-28

C:\Users\kpoppe1\DC\ACCDocs\Jacobs\US CA_d3391901_POLA Terminal Island GS\Project Files\30 PROJECT DATA\PID\STRUCTURE\Drawings\1-3497 RW-28.dwg, 8/15/2025 2:34:17 PM
POLAPRO1_042023_BWD

NOTES

1. FOR CALTRANS REINFORCEMENT AND ADDITIONAL DETAILS, SEE CALTRANS STANDARD PLAN B11-82.
2. BARRIER SLAB REINFORCEMENT NOT SHOWN. FOR DETAILS, SEE SHEET RW-15.
3. TYPE 5 WALL REINFORCEMENT NOT SHOWN. FOR DETAILS, SEE SHEET RW-21.

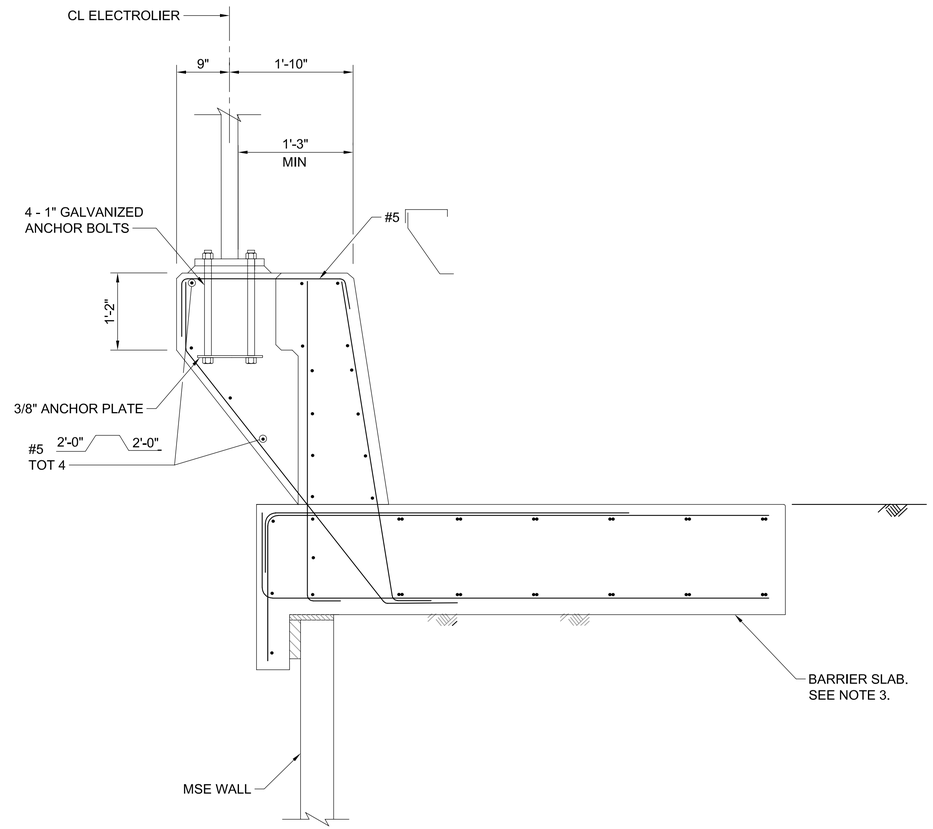

1RW-29 / RW-29 MSE WALL ELECTROLIER PEDESTAL TYPICAL SECTION

3/4"=1'-0"

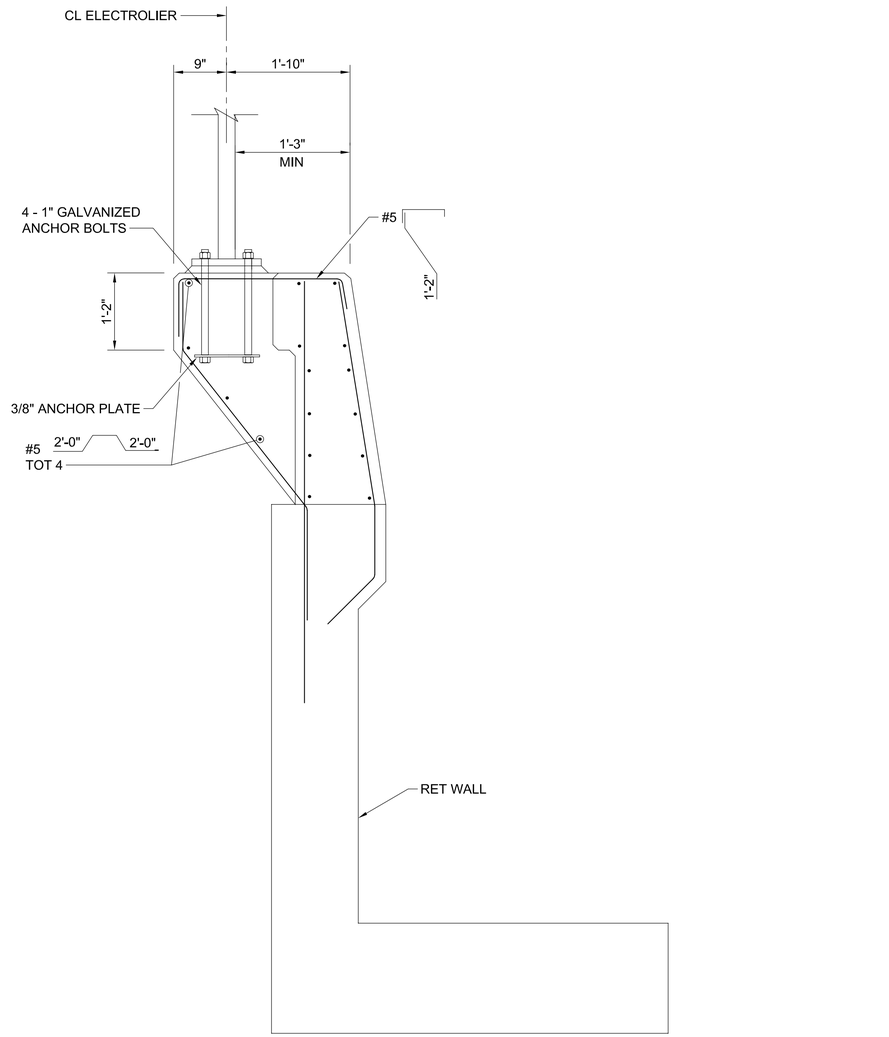

2RW-29 / RW-29 TYPE 5 WALL ELECTROLIER PEDESTAL TYPICAL SECTION

3/4"=1'-0"

SHEET ____ OF 400

NO.	DATE	DRAWN	REVISIONS -	CHK'D	APP'D
			NOT FOR CONSTRUCTION		

NO.	DATE	DRAWN	REVISIONS -	CHK'D	APP'D
			80% DESIGN		

Jacobs
2600 MICHELSON DRIVE, SUITE 500
IRVINE, CA 92612
P: (949) 224-7900
F: (949) 224-7501

SCALE:	NONE
DRAWN:	N. MORALES
CHECKED:	B. DENG
DESIGNED:	L. DIECKMANN
ENGINEER / ARCHITECT	B. DENG

TERMINAL ISLAND GRADE SEPARATION

LIGHTING DETAILS

THE PORT OF LOS ANGELES
ENGINEERING DIVISION
425 S. PALOS VERDES STREET SAN PEDRO CA 90731-3309

DRAWING NUMBER	SHEET NUMBER
1-3497	RW-29

C:\Users\kpope1\DC\ACCDocs\Jacobs\US CA_d3391901_POLA Terminal Island GS\Project Files\30 PROJECT DATA\PID\STRUCTURES\Drawings\1-3497 RW-29.dwg, 8/15/2025 2:35:39 PM
POLAPROT_04/2021_BWD

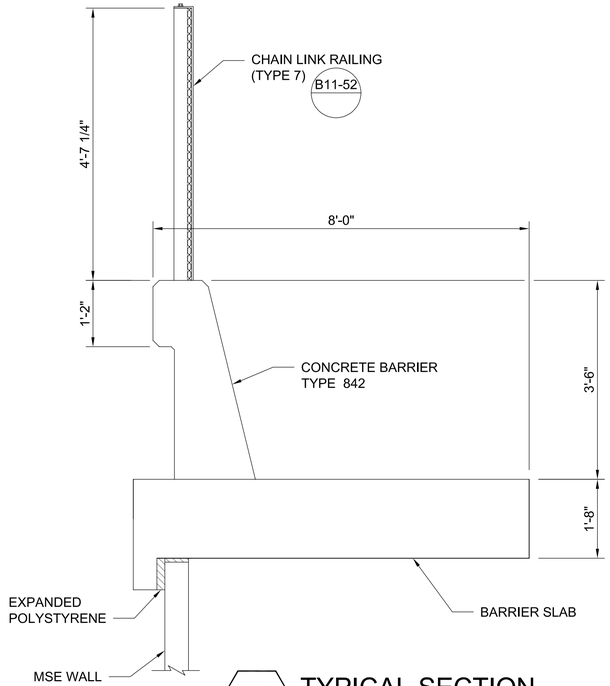

1RW-30 / RW-30 TYPICAL SECTION
SCALE: 3/4"=1'-0"

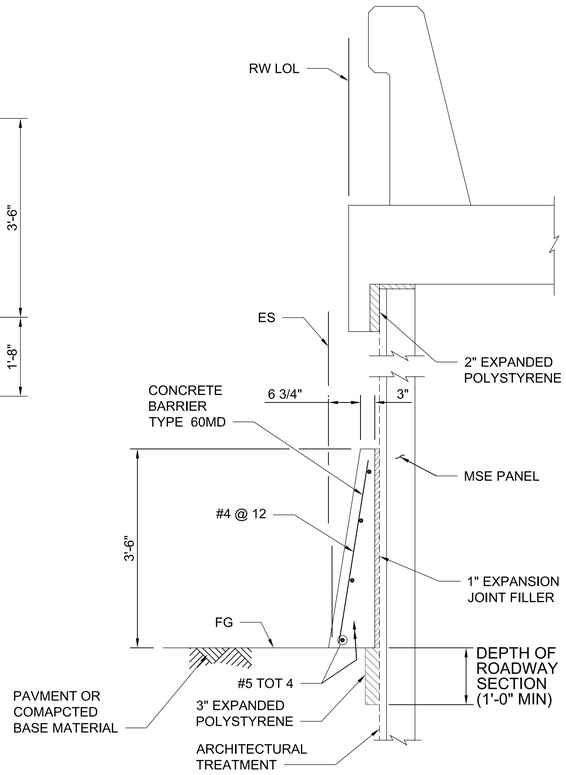

2RW-30 / RW-30 SECTION
SCALE: 3/4"=1'-0"

RW 723 STA 10+00.00 TO 14+18.79
RW 823 STA 10+00.00 TO 14+37.25

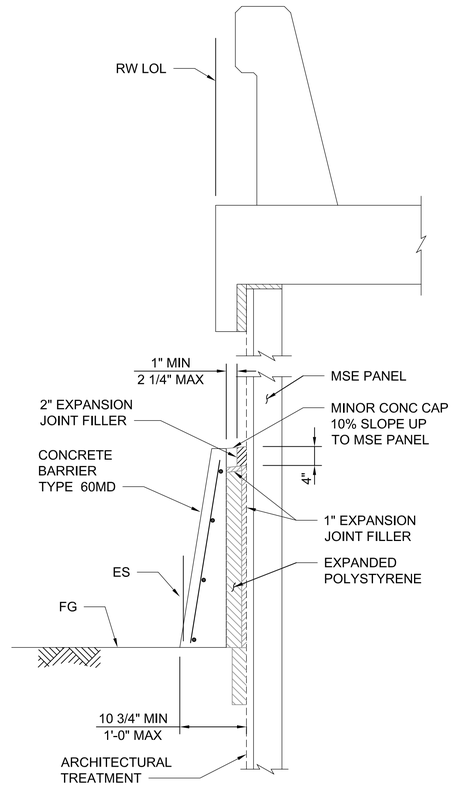

3RW-30 / RW-30 SECTION
SCALE: 3/4"=1'-0"

NOTE: FOR INFORMATION
NOT SHOWN SEE SECTION 2RW-30

RW 723 STA 14+18.79 TO 14+48.79
RW 823 STA 14+37.25 TO 14+67.25

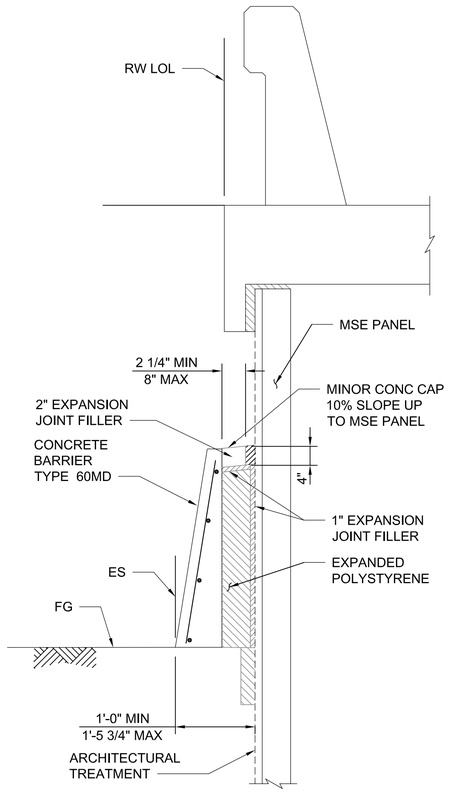

4RW-30 / RW-30 SECTION
SCALE: 3/4"=1'-0"

NOTE: FOR INFORMATION
NOT SHOWN SEE SECTION 2RW-30

RW 723 STA 14+48.79 TO 14+78.79
RW 823 STA 14+67.25 TO 14+97.25

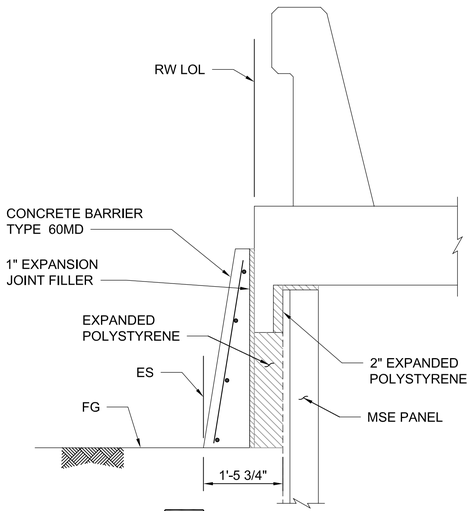

5RW-30 / RW-30 SECTION
SCALE: 3/4"=1'-0"

NOTE: FOR INFORMATION
NOT SHOWN SEE SECTION 2RW-30

RW 723 STA 14+78.79 TO STA 17+93.25
RW 823 STA 14+97.25 TO STA 17+93.25

NOTES

1. FOR LIMITS OF CHAIN LINK RAILING (TYPE 7), SEE SHEET RW-3.
2. FOR FENCE CONNECTION DETAILS TO BARRIER TYPE 842, SEE SHEET S-27.

SHEET ---- OF 400

NO.	DATE	DRAWN	REVISIONS -	CHK'D	APP'D	NO.	DATE	DRAWN	REVISIONS -	CHK'D	APP'D
			NOT FOR CONSTRUCTION						80% DESIGN		

Jacobs
2600 MICHELSON DRIVE, SUITE 500
IRVINE, CA 92612
T: (949) 224-7500
F: (949) 224-7501

SCALE: NONE
DRAWN: N. MORALES
CHECKED: B. DENG
DESIGNED: L. DIECKMANN
ENGINEER / ARCHITECT
B. DENG

TERMINAL ISLAND GRADE SEPARATION

FENCING DETAILS

THE PORT OF LOS ANGELES
ENGINEERING DIVISION
425 S. PALOS VERDES STREET SAN PEDRO CA 90731-3309

DRAWING NUMBER 1-3497
SHEET NUMBER RW-30

C:\Users\kpope1\DC\ACCDocs\Jacobs\US CA_d3391901_POLA Terminal Island GS\Project Files\30 PROJECT DATA\PID\STRUCTURE\Drawings\1-3497 RW-30.dwg, 8/15/2025 2:42:40 PM

BASIS OF BEARINGS AND COORDINATES:

COORDINATES ARE BASED ON THE 1983 CALIFORNIA COORDINATE SYSTEM (CCS83) ZONE 5 .

COORDINATES SHOWN ROUNDED OFF TO THE NEAREST TENTH ARE APPROXIMATE.

BASIS OF ELEVATIONS:

ELEVATIONS ARE BASED ON NATIONAL GEODETIC VERTICAL DATUM (NGVD 29).

NOTES:

THIS LOTB SHEET (BORING RECORD) WAS PREPARED IN ACCORDANCE WITH CALTRANS SOIL AND ROCK LOGGING, CLASSIFICATION AND PRESENTATION MANUAL (2022).

BOREHOLE LOCATION TABLE

H ID	N r	E	E ( )
B25-01	1729264	6482657	10.9
B25-02	1729218	6482699	11.1
B25-03	1729118	6482911	12.9
B25-04	1729056	6483275	14.4
B25-05	1729161	6483444	14.7
B25-06	1729328	6483509	15.3
B25-07	1729231	6483599	15.7
B25-08	1729485	6483664	13.6
B25-09	1729762	6483791	13.7
B25-10	1730029	6483915	13.5
CPT25-01	1728986	6483079	14.2
CPT25-02	1729231	6483599	15.8
CPT25-03	1729589	6483722	13.8
CPT25-04	1729881	6483871	14.1
CPT25-05	1730145	6483996	14.0

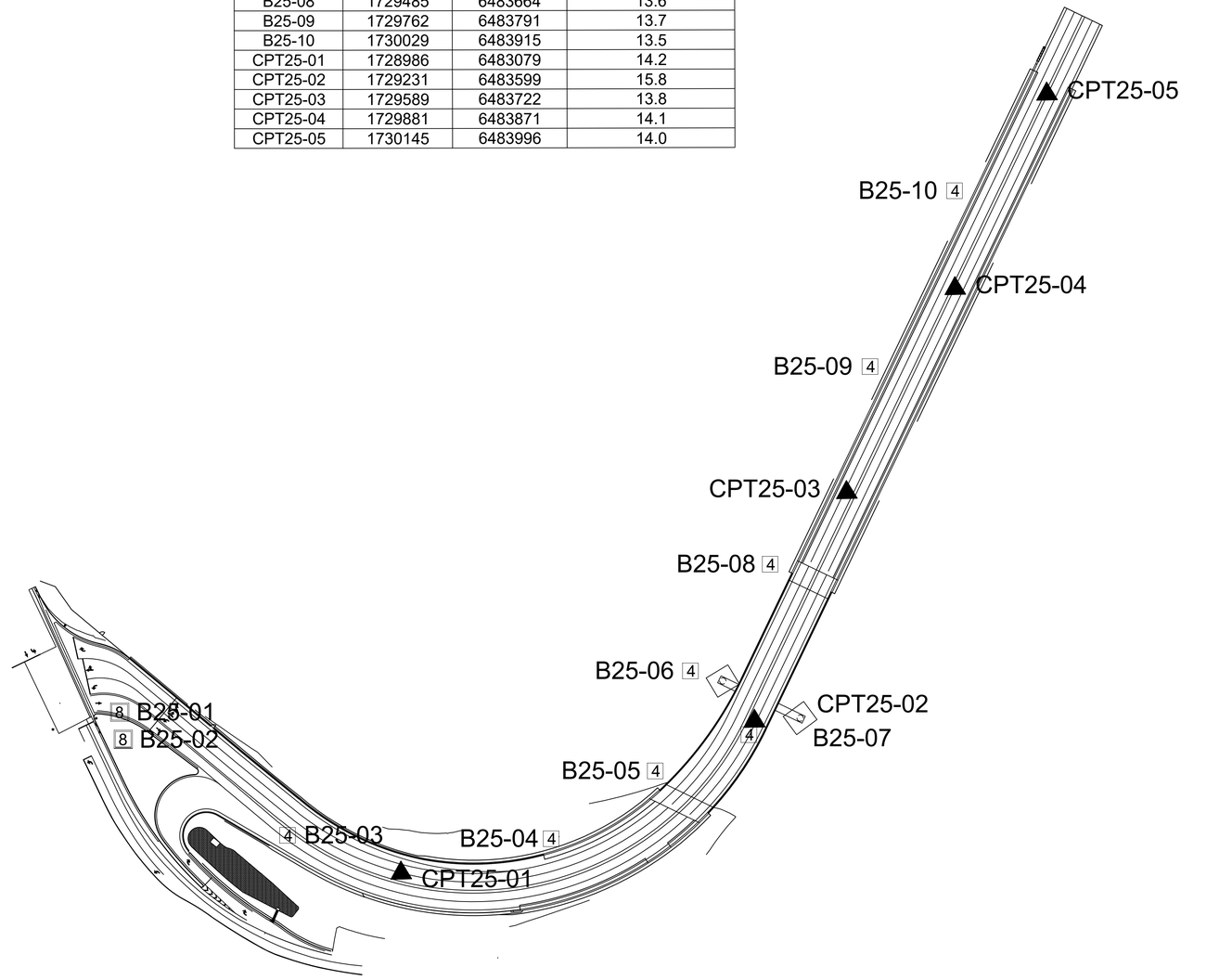

1RW-31
RW-31

PLAN

SCALE: 1" = 100'

N

100' 0'-0" 100' 200'

SCALE: 1" = 100'

SHEET ____ OF 400

NO.	DATE	DRAWN	REVISIONS -	CHK'D	APP'D
			NOT FOR CONSTRUCTION		

NO.	DATE	DRAWN	REVISIONS -	CHK'D	APP'D
			80% DESIGN		

Earth Mechanics, Inc.
Geotechnical and Earthquake Engineering

SCALE:	1" = 100'
DRAWN:	X T
CHECKED:	A dr K r
DESIGNED:	A dr K r

ENGINEER / ARCHITECT

TERMINAL ISLAND GRADE SEPARATION

LOG OF TEST BORINGS LAYOUT

THE PORT OF LOS ANGELES
ENGINEERING DIVISION
425 S. PALOS VERDES STREET SAN PEDRO CA 90731-3309

DRAWING NUMBER: 1-3497

SHEET NUMBER: RW-31

POLAPRD1_042023_BWD

N r	E	E ( )
1729118	6482911	12.9
1728986	6483079	14.2

NOTES:

THIS LOTB SHEET (BORING RECORD) WAS PREPARED IN ACCORDANCE WITH CALTRANS SOIL AND ROCK LOGGING, CLASSIFICATION AND PRESENTATION MANUAL (2022).

BASIS OF BEARINGS AND COORDINATES:

COORDINATES ARE BASED ON THE 1983 CALIFORNIA COORDINATE SYSTEM (CCS83) ZONE 5 .

COORDINATES SHOWN ROUNDED OFF TO THE NEAREST TENTH ARE APPROXIMATE.

BASIS OF ELEVATIONS:

ELEVATIONS ARE BASED ON NATIONAL GEODETIC VERTICAL DATUM (NGVD 29).

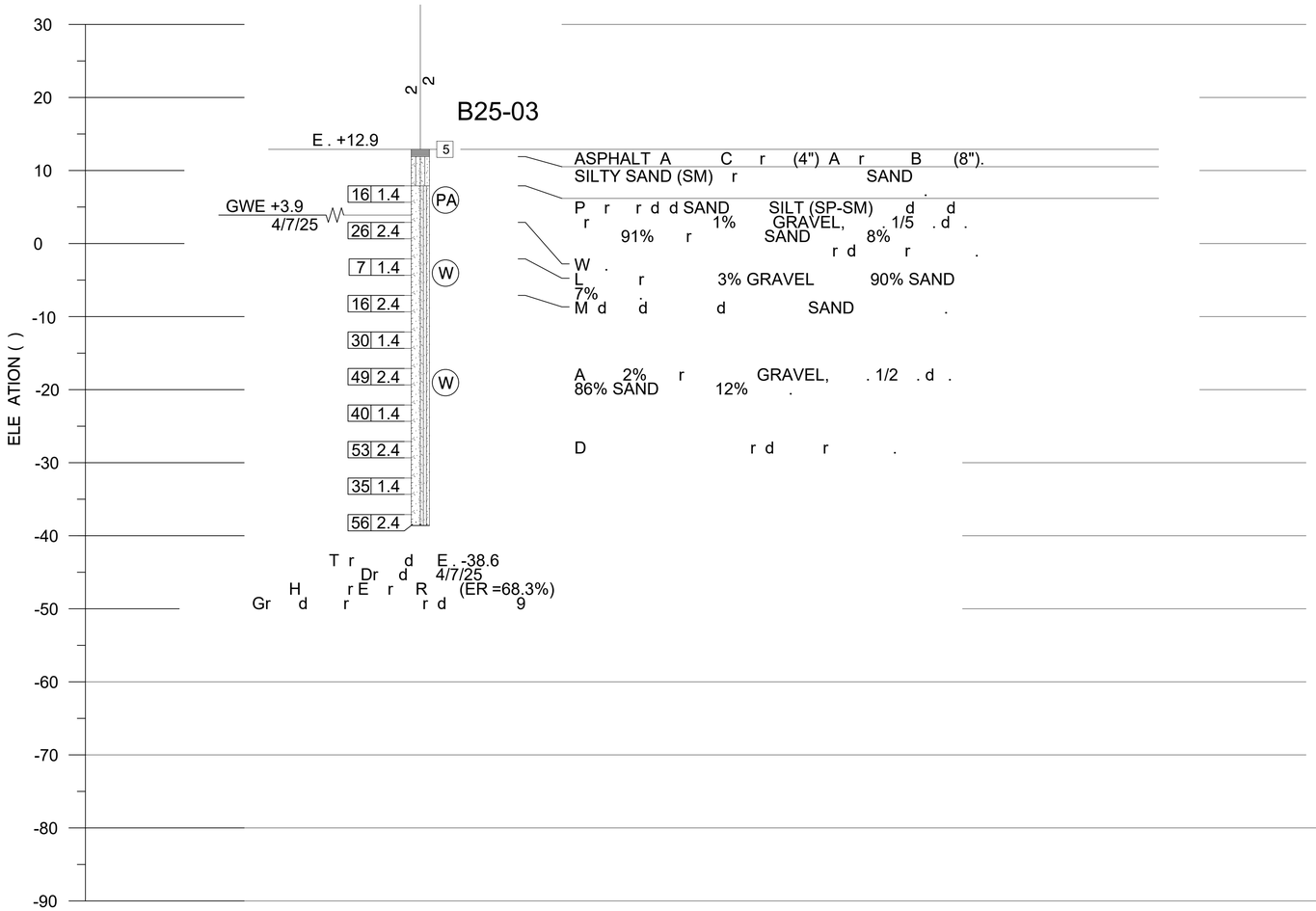

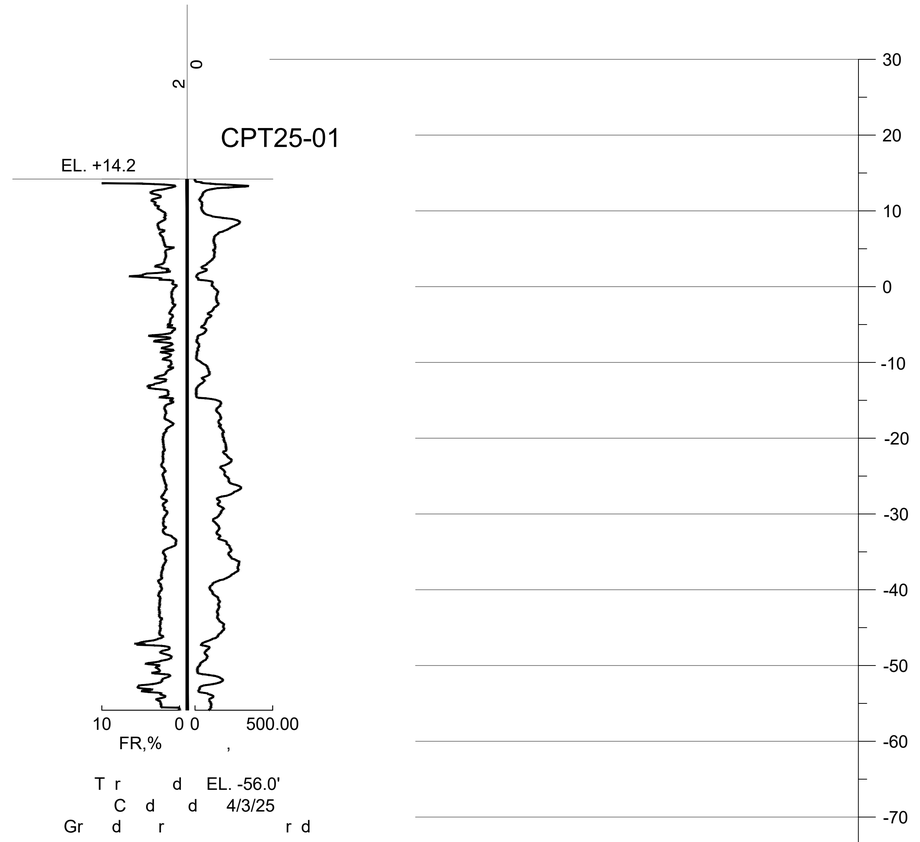

1RW-32
RW-32

LOTB

SCALE: 1" = 10'

SHEET ____ OF 400

NO.	DATE	DRAWN	REVISIONS -	CHK'D	APP'D
			NOT FOR CONSTRUCTION		

NO.	DATE	DRAWN	REVISIONS -	CHK'D	APP'D
			80% DESIGN		

Earth Mechanics, Inc.
Geotechnical and Earthquake Engineering

SCALE:	1" = 10'
DRAWN:	X T
CHECKED:	A dr K r
DESIGNED:	A dr K r

ENGINEER / ARCHITECT

TERMINAL ISLAND GRADE SEPARATION

LOG OF TEST BORINGS - RETAINING WALL (1 6)

THE PORT OF LOS ANGELES
ENGINEERING DIVISION
425 S. PALOS VERDES STREET SAN PEDRO CA 90731-3309

DRAWING NUMBER: 1-3497

SHEET NUMBER: RW-32

POLAPRDT_042023_BWD

N r	E	E ( )
1729056	6483275	14.4

NOTES:

THIS LOTB SHEET (BORING RECORD) WAS PREPARED IN ACCORDANCE WITH CALTRANS SOIL AND ROCK LOGGING, CLASSIFICATION AND PRESENTATION MANUAL (2022).

BASIS OF BEARINGS AND COORDINATES:

COORDINATES ARE BASED ON THE 1983 CALIFORNIA COORDINATE SYSTEM (CCS83) ZONE 5 .

COORDINATES SHOWN ROUNDED OFF TO THE NEAREST TENTH ARE APPROXIMATE.

BASIS OF ELEVATIONS:

ELEVATIONS ARE BASED ON NATIONAL GEODETIC VERTICAL DATUM (NGVD 29).

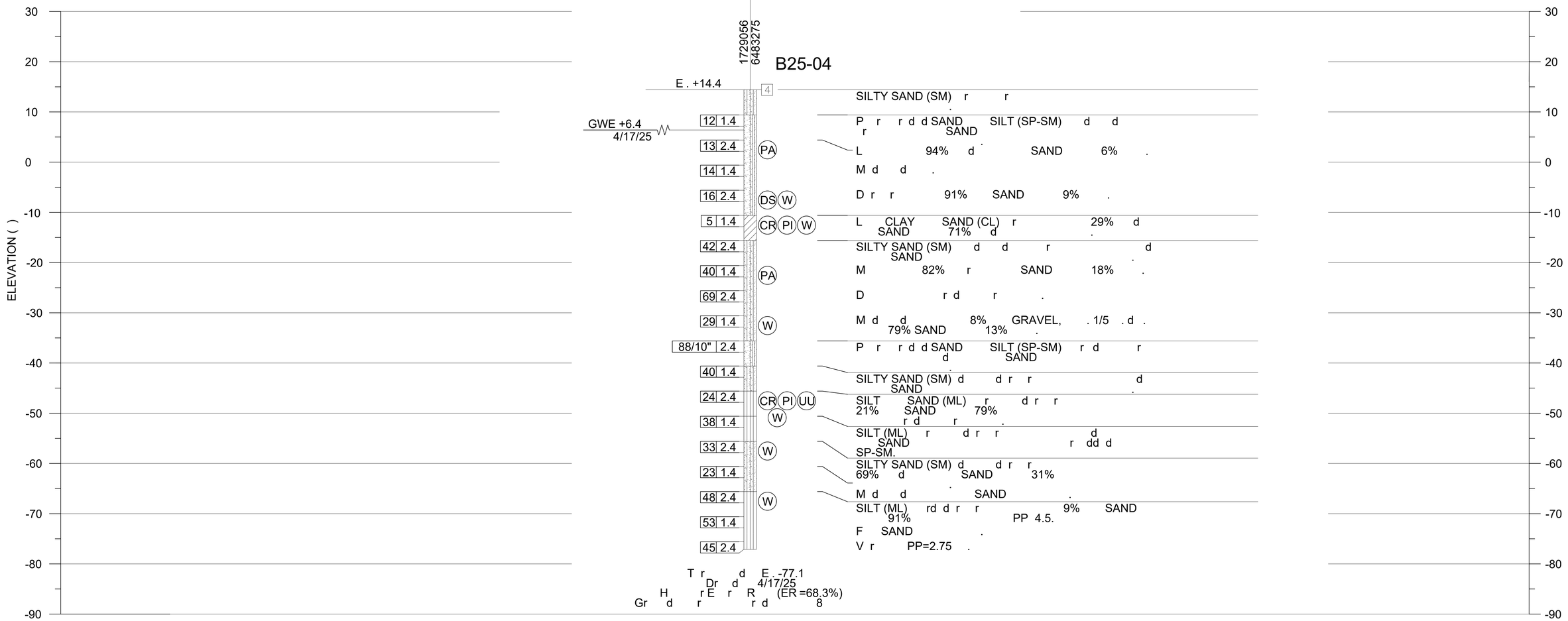

1RW-32 / RW-32

LOTB

SCALE: 1" = 10'

SHEET ____ OF 400

NO.	DATE	DRAWN	REVISIONS -	CHK'D	APP'D
			NOT FOR CONSTRUCTION		

NO.	DATE	DRAWN	REVISIONS -	CHK'D	APP'D
			80% DESIGN		

Earth Mechanics, Inc.
Geotechnical and Earthquake Engineering

SCALE:	1" = 10'
DRAWN:	X T
CHECKED:	A dr K r
DESIGNED:	A dr K r
ENGINEER / ARCHITECT	

TERMINAL ISLAND GRADE SEPARATION

LOG OF TEST BORINGS - RETAINING WALL (2 6)

THE PORT OF LOS ANGELES
ENGINEERING DIVISION
425 S. PALOS VERDES STREET SAN PEDRO CA 90731-3309

DRAWING NUMBER: 1-3497

SHEET NUMBER: RW-33

POLAPRO1_040223_BWD

N r	E	E ( )
1729161	6483444	14.7

NOTES:

THIS LOTB SHEET (BORING RECORD) WAS PREPARED IN ACCORDANCE WITH CALTRANS SOIL AND ROCK LOGGING, CLASSIFICATION AND PRESENTATION MANUAL (2022).

BASIS OF BEARINGS AND COORDINATES:

COORDINATES ARE BASED ON THE 1983 CALIFORNIA COORDINATE SYSTEM (CCS83) ZONE 5 .

COORDINATES SHOWN ROUNDED OFF TO THE NEAREST TENTH ARE APPROXIMATE.

BASIS OF ELEVATIONS:

ELEVATIONS ARE BASED ON NATIONAL GEODETIC VERTICAL DATUM (NGVD 29).

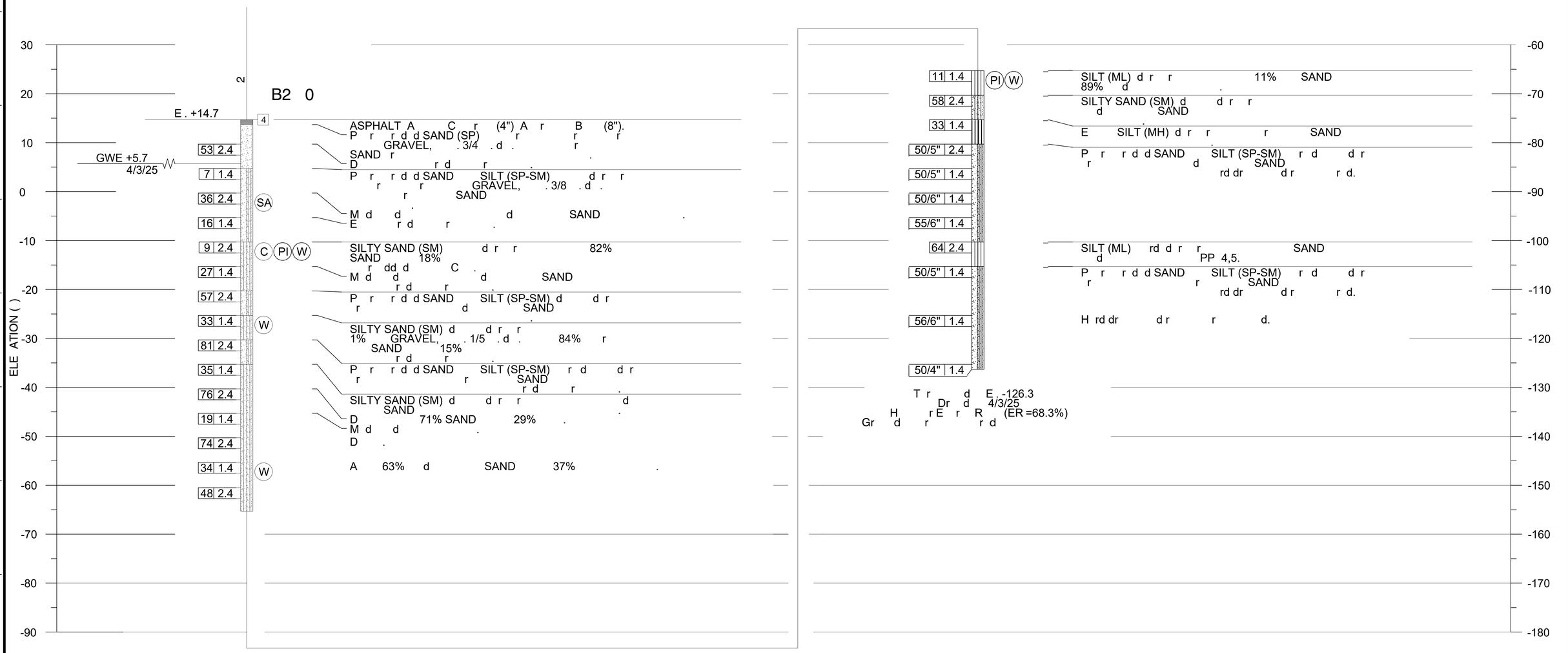

1RW-32
RW-32

LOTB
SCALE: 1" = 10'

SHEET ____ OF 400

NO.	DATE	DRAWN	REVISIONS -	CHK'D	APP'D
			NOT FOR CONSTRUCTION		

NO.	DATE	DRAWN	REVISIONS -	CHK'D	APP'D
			80% DESIGN		

Earth Mechanics, Inc.
Geotechnical and Earthquake Engineering

SCALE:	1" = 10'
DRAWN:	X T
CHECKED:	A dr K r
DESIGNED:	A dr K r

ENGINEER / ARCHITECT

TERMINAL ISLAND GRADE SEPARATION

LOG OF TEST BORINGS - RETAINING WALL (3 6)

THE PORT OF LOS ANGELES
ENGINEERING DIVISION
425 S. PALOS VERDES STREET SAN PEDRO CA 90731-3309

DRAWING NUMBER: 1-3497

SHEET NUMBER: RW-34

POLAPRDT_04/2023_BWD

N r	E	E ( )
1729589	6483723	13.8

NOTES:

THIS LOTB SHEET (BORING RECORD) WAS PREPARED IN ACCORDANCE WITH CALTRANS SOIL AND ROCK LOGGING, CLASSIFICATION AND PRESENTATION MANUAL (2022).

BASIS OF BEARINGS AND COORDINATES:

COORDINATES ARE BASED ON THE 1983 CALIFORNIA COORDINATE SYSTEM (CCS83) ZONE 5 .

COORDINATES SHOWN ROUNDED OFF TO THE NEAREST TENTH ARE APPROXIMATE.

BASIS OF ELEVATIONS:

ELEVATIONS ARE BASED ON NATIONAL GEODETIC VERTICAL DATUM (NGVD 29).

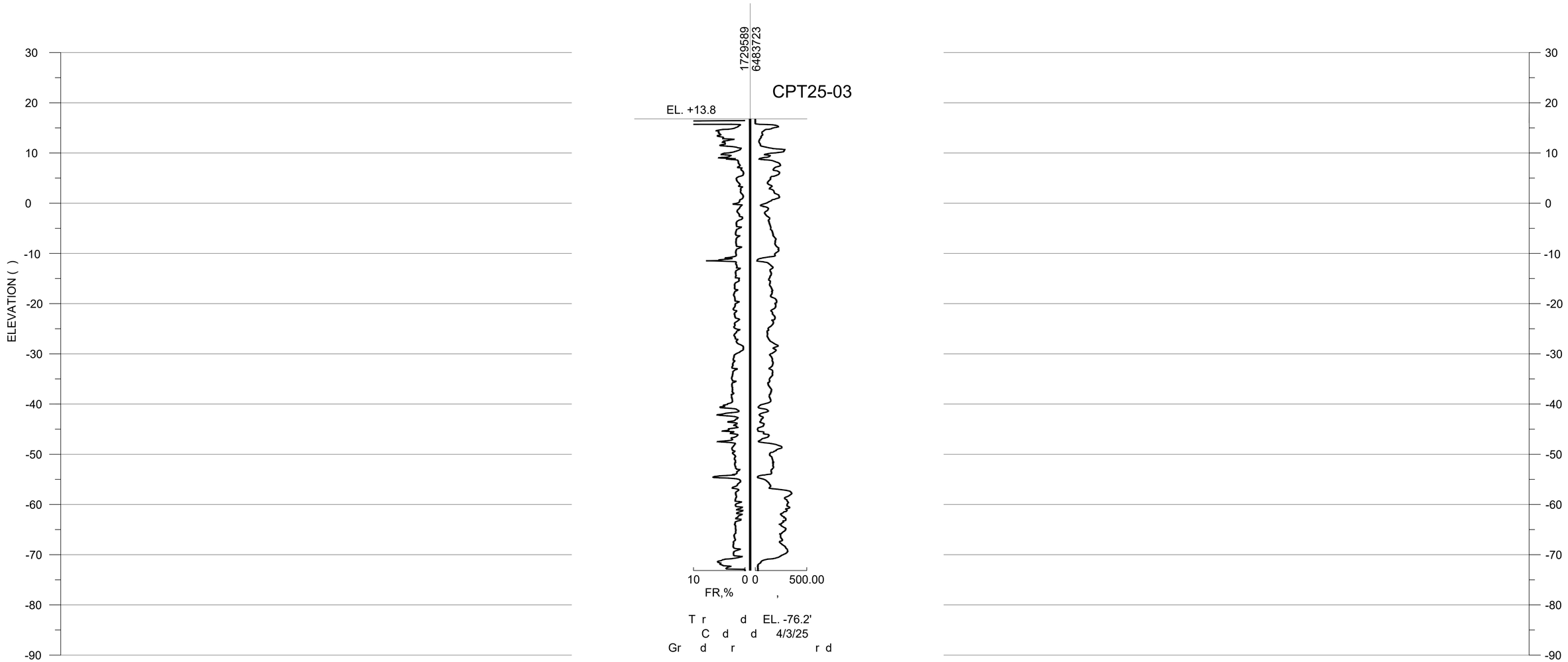

1RW-32
RW-32

LOTB

SCALE: 1" = 10'

SHEET ____ OF 400

NO.	DATE	DRAWN	REVISIONS -	CHK'D	APP'D
			NOT FOR CONSTRUCTION		

NO.	DATE	DRAWN	REVISIONS -	CHK'D	APP'D
			80% DESIGN		

Earth Mechanics, Inc.
Geotechnical and Earthquake Engineering

SCALE:	1" = 10'
DRAWN:	X T
CHECKED:	A dr K r
DESIGNED:	A dr K r

ENGINEER / ARCHITECT

TERMINAL ISLAND GRADE SEPARATION

LOG OF TEST BORINGS - RETAINING WALL (4 6)

THE PORT OF LOS ANGELES
ENGINEERING DIVISION
425 S. PALOS VERDES STREET SAN PEDRO CA 90731-3309

DRAWING NUMBER: 1-3497

SHEET NUMBER: RW-35

POLAPRDT_040223_BWD

N r	E	E ( )
1729762	6483791	13.7
1729881	6483871	14.1

BASIS OF BEARINGS AND COORDINATES:

COORDINATES ARE BASED ON THE 1983 CALIFORNIA COORDINATE SYSTEM (CCS83) ZONE 5 .

COORDINATES SHOWN ROUNDED OFF TO THE NEAREST TENTH ARE APPROXIMATE.

BASIS OF ELEVATIONS:

ELEVATIONS ARE BASED ON NATIONAL GEODETIC VERTICAL DATUM (NGVD 29).

NOTES:

THIS LOTB SHEET (BORING RECORD) WAS PREPARED IN ACCORDANCE WITH CALTRANS SOIL AND ROCK LOGGING, CLASSIFICATION AND PRESENTATION MANUAL (2022).

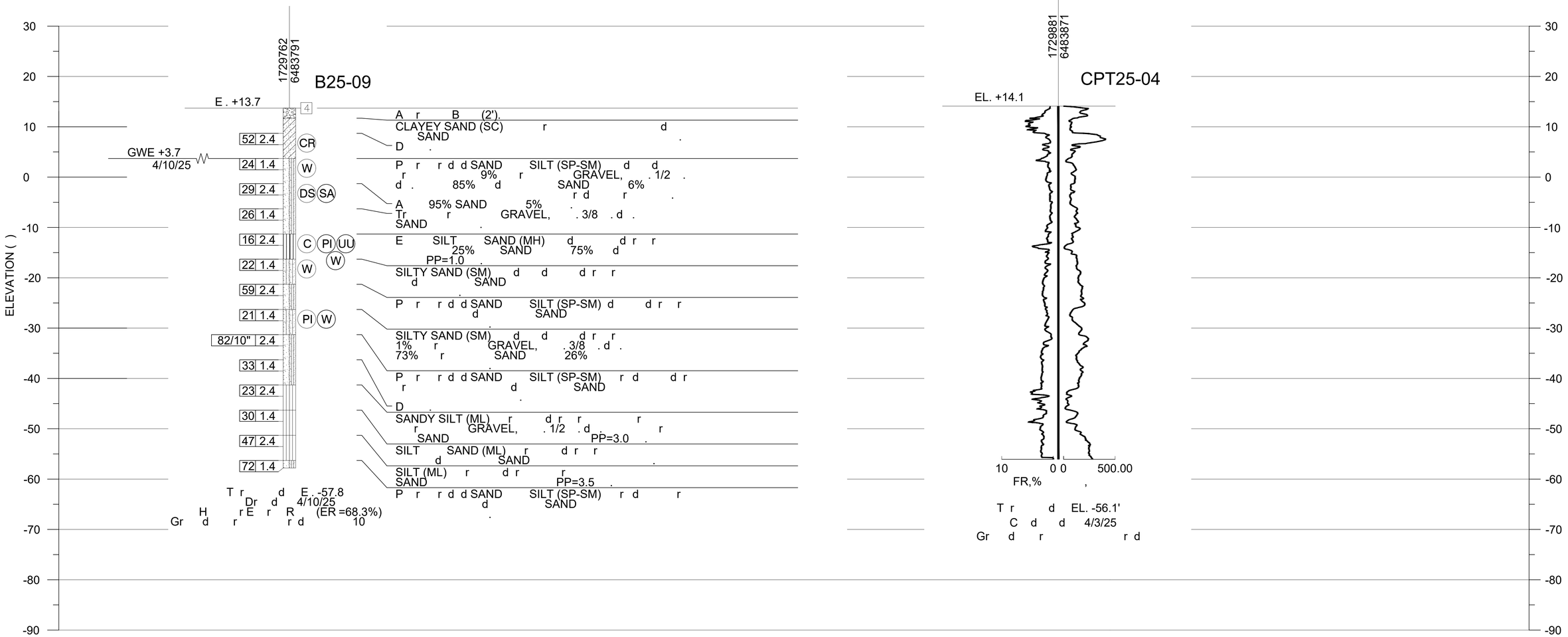

1RW-32
RW-32

LOTB
SCALE: 1" = 10'

SHEET ____ OF 400

NO.	DATE	DRAWN	REVISIONS -	CHK'D	APP'D
			NOT FOR CONSTRUCTION		

NO.	DATE	DRAWN	REVISIONS -	CHK'D	APP'D
			80% DESIGN		

Earth Mechanics, Inc.
Geotechnical and Earthquake Engineering

SCALE:	1" = 10'
DRAWN:	X T
CHECKED:	A dr K r
DESIGNED:	A dr K r
ENGINEER / ARCHITECT	

TERMINAL ISLAND GRADE SEPARATION

LOG OF TEST BORINGS - RETAINING WALL (5 6)

THE PORT OF LOS ANGELES
ENGINEERING DIVISION
425 S. PALOS VERDES STREET SAN PEDRO CA 90731-3309

DRAWING NUMBER 1-3497

SHEET NUMBER RW-36

POLAPRO1_040223_BWD

N r	E	E ( )
1730029	6483915	13.5
1730145	6483996	14.0

BASIS OF BEARINGS AND COORDINATES:

COORDINATES ARE BASED ON THE 1983 CALIFORNIA COORDINATE SYSTEM (CCS83) ZONE 5 .

COORDINATES SHOWN ROUNDED OFF TO THE NEAREST TENTH ARE APPROXIMATE.

BASIS OF ELEVATIONS:

ELEVATIONS ARE BASED ON NATIONAL GEODETIC VERTICAL DATUM (NGVD 29).

NOTES:

THIS LOTB SHEET (BORING RECORD) WAS PREPARED IN ACCORDANCE WITH CALTRANS SOIL AND ROCK LOGGING, CLASSIFICATION AND PRESENTATION MANUAL (2022).

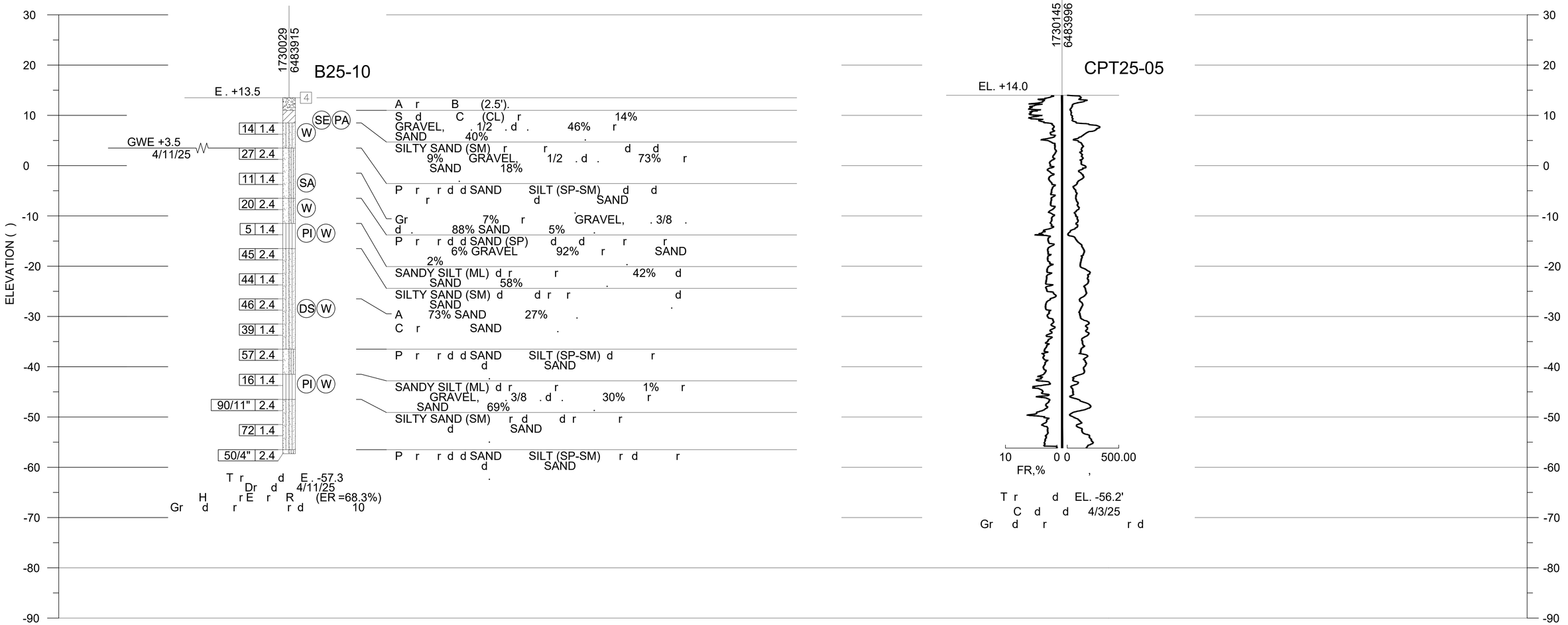

1RW-32
RW-32

LOTB
SCALE: 1" = 10'

SHEET ____ OF 400

NO.	DATE	DRAWN	REVISIONS -	CHK'D	APP'D
			NOT FOR CONSTRUCTION		

NO.	DATE	DRAWN	REVISIONS -	CHK'D	APP'D
			80% DESIGN		

Earth Mechanics, Inc.
Geotechnical and Earthquake Engineering

SCALE:	1" = 10'
DRAWN:	X T
CHECKED:	A dr K r
DESIGNED:	A dr K r
ENGINEER / ARCHITECT	

TERMINAL ISLAND GRADE SEPARATION

LOG OF TEST BORINGS - RETAINING WALL (6 6)

THE PORT OF LOS ANGELES
ENGINEERING DIVISION
425 S. PALOS VERDES STREET SAN PEDRO CA 90731-3309

DRAWING NUMBER: 1-3497

SHEET NUMBER: RW-37

POLAPRO1_042023_BWD

GENERAL TRAFFIC CONTROL NOTES

1. TRAFFIC CONTROL SHALL BE IN ACCORDANCE WITH THE LATEST EDITION OF THE WORK AREA TRAFFIC CONTROL HANDBOOK (WATCHBOOK).
2. MAINTAIN A MINIMUM OF ONE (1) LANE IN EACH DIRECTION.TRAFFIC CONTROL SHALL BE IN ACCORDANCE WITH THE LATEST EDITION OF THE CALIFORNIA MANUAL ON UNIFORM TRAFFIC CONTROL DEVICES (MUTCD).
3. TRAFFIC CONTROL PLANS SHALL BE SUBMITTED TEN (10) WORKING DAYS IN ADVANCE OF SCHEDULED WORK FOR REVIEW AND WRITTEN APPROVAL. TRAFFIC CONTROL PLANS SHALL BE SIGNED BE A REGISTERED CIVIL AND/OR TRAFFIC ENGINEER. NO FIELD WORK SHALL BEGIN UNTIL TRAFFIC CONTROL PLAN IS APPROVED BY ENGINEER.
4. DO NOT INTERRUPT LOCAL STREET TRAFFIC AT ANY TIME. COORDINATE WORK WITH ENGINEER. SEE COORDINATION SECTION OF SPECIFICATIONS.
5. SUBMIT A RAILROAD WORK PLAN TO ENGINEER FOR WRITTEN APPROVAL, PRIOR TO ANY WORK BEING PERFORMED WITHIN TWENTY-FIVE (25) FEET FROM THE CENTERLINE OF LIVE TRACKS. RELATED PERMITS SHALL BE OBTAINED PRIOR TO SUBMITTING THE WORK PLAN. SEE COORDINATION SECTION OF SPECIFICATIONS.
6. PROVIDE A PHL TRAINED FLAGPERSON WHEN WORKING WITHIN TWENTY-FIVE (25) FEET OF LIVE TRACKS.

W20-1	G20-2	C30 (CA)	W4-2(CA)	C20(CA)(RT)	R3-7	R3-4	R9-3	R49(CA)	R26A(CA)	SG61C(CA)
ROAD WORK AHEAD	END ROAD WORK	LANE CLOSED		RIGHT LANE CLOSED AHEAD	RIGHT LANE MUST TURN RIGHT			NO PED CROSSING / USE CROSSWALK	NO PARKING ANY TIME	ENTERING TSUNAMI HAZARD ZONE

LEGEND

- EXISTING STRIPING & MARKING TO REMAIN
- EXISTING STRIPING & MARKINGS TO BE REMOVED
- PROPOSED STRIPING & MARKINGS
- EXISTING SIGNS
- PROPOSED TEMPORARY SIGN
- SIGNS TO BE REMOVED
- SIGNALIZED INTERSECTION
- WORK AREA
- 20' TEMPORARY BARRIER SYSTEM (INTERCONNECT)
- TEMPORARY CRASH CUSHION (TL-3)
- PROPOSED TRAFFIC CONE
- PROPOSED 30" EPOXIED SURFACE MOUNT DELINEATOR WITH REFLECTIVE SHEETS
- R/C EXISTING RED CURB

STAGE CONSTRUCTION NOTES

1. INSTALL TEMP BARRIER SYSTEM
2. INSTALL TEMP CRASH CUSHION TL-3
3. INSTALL CHANNELIZER (SURFACE MOUNTED)
4. INSTALL TEMP SIGN
5. INSTALL TEMP CONES
6. INSTALL ARROW BOARD



SHEET ____ OF 400

NO.	DATE	DRAWN	REVISIONS -	CHK'D	APP'D
			NOT FOR CONSTRUCTION		

NO.	DATE	DRAWN	REVISIONS -	CHK'D	APP'D
			80% DESIGN		

Jacobs
2600 MICHELSON DRIVE, SUITE 500
IRVINE, CA 92612
T: (949) 224-7500
F: (949) 224-7501

SCALE:	1"=100'
DRAWN:	A. DEPRA
CHECKED:	A. BENCINCI
DESIGNED:	A. CABRERA VENTURA
	ENGINEER / ARCHITECT

TERMINAL ISLAND GRADE SEPARATION

TRAFFIC CONTROL PLAN - KEY MAP

THE PORT OF LOS ANGELES
ENGINEERING DIVISION
425 S. PALOS VERDES STREET SAN PEDRO CA 90731-3309

DRAWING NUMBER	SHEET NUMBER
1-3497	TC-00

POLAPR01_04.0223_BWD

W20-1	G20-2	R3-7	R3-4	R9-3	R49(CA)	R26A(CA)	SG61C(CA)
ROAD WORK AHEAD	END ROAD WORK	RIGHT LANE MUST TURN RIGHT			NO PED CROSSING / USE CROSSWALK	NO PARKING ANY TIME	ENTERING TSUNAMI HAZARD ZONE

GENERAL TRAFFIC CONTROL NOTES

1. TRAFFIC CONTROL SHALL BE IN ACCORDANCE WITH THE LATEST EDITION OF THE WORK AREA TRAFFIC CONTROL HANDBOOK (WATCHBOOK).
2. MAINTAIN A MINIMUM OF ONE (1) LANE IN EACH DIRECTION.TRAFFIC CONTROL SHALL BE IN ACCORDANCE WITH THE LATEST EDITION OF THE CALIFORNIA MANUAL ON UNIFORM TRAFFIC CONTROL DEVICES (MUTCD).
3. TRAFFIC CONTROL PLANS SHALL BE SUBMITTED TEN (10) WORKING DAYS IN ADVANCE OF SCHEDULED WORK FOR REVIEW AND WRITTEN APPROVAL. TRAFFIC CONTROL PLANS SHALL BE SIGNED BE A REGISTERED CIVIL AND/OR TRAFFIC ENGINEER. NO FIELD WORK SHALL BEGIN UNTIL TRAFFIC CONTROL PLAN IS APPROVED BY ENGINEER.
4. DO NOT INTERRUPT LOCAL STREET TRAFFIC AT ANY TIME. COORDINATE WORK WITH ENGINEER. SEE COORDINATION SECTION OF SPECIFICATIONS.
5. SUBMIT A RAILROAD WORK PLAN TO ENGINEER FOR WRITTEN APPROVAL, PRIOR TO ANY WORK BEING PERFORMED WITHIN TWENTY-FIVE (25) FEET FROM THE CENTERLINE OF LIVE TRACKS. RELATED PERMITS SHALL BE OBTAINED PRIOR TO SUBMITTING THE WORK PLAN. SEE COORDINATION SECTION OF SPECIFICATIONS.
6. PROVIDE A PHL TRAINED FLAGPERSON WHEN WORKING WITHIN TWENTY-FIVE (25) FEET OF LIVE TRACKS.

LEGEND

- EXISTING STRIPING & MARKING TO REMAIN
- EXISTING STRIPING & MARKINGS TO BE REMOVED
- PROPOSED STRIPING & MARKINGS
- EXISTING SIGNS
- PROPOSED TEMPORARY SIGN
- SIGNS TO BE REMOVED
- SIGNALIZED INTERSECTION
- WORK AREA
- 20' TEMPORARY BARRIER SYSTEM (INTERCONNECTED) (CALTRANS ST
- TEMPORARY CRASH CUSHION (TL-3)
- PROPOSED TRAFFIC CONE
- PROPOSED 30" EPOXIED SURFACE MOUNT DELINEATOR WITH REFLECTIVE SHEETS
- R/C EXISTING RED CURB

STAGE CONSTRUCTION NOTES

1. INSTALL TEMP BARRIER SYSTEM
2. INSTALL TEMP CRASH CUSHION TL-3
3. INSTALL CHANNELIZER (SURFACE MOUNTED)
4. INSTALL TEMP SIGN

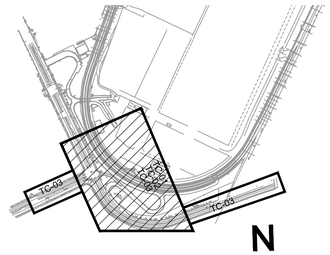

KEY MAP

N

1TC-01 / TC-01 PLAN
SCALE: 1" = 40'

40' 0'-0" 40' 80'
1" = 40'

SHEET ____ OF 400

NO.	DATE	DRAWN	REVISIONS -	CHK'D	APP'D
			NOT FOR CONSTRUCTION		

NO.	DATE	DRAWN	REVISIONS -	CHK'D	APP'D
			80% DESIGN		

Jacobs
2500 MICHELSON DRIVE, SUITE 600
IRVINE, CA 92612
T: (949) 224-7500
F: (949) 224-7501

SCALE: 1"=40'
DRAWN: A. DEPRA
CHECKED: A. BENCINCI
DESIGNED: A. CABRERA VENTURA
ENGINEER / ARCHITECT

TERMINAL ISLAND GRADE SEPARATION

TRAFFIC CONTROL PLAN - 1

THE PORT OF LOS ANGELES
ENGINEERING DIVISION
425 S. PALOS VERDES STREET SAN PEDRO CA 90731-3309

DRAWING NUMBER: 1-3497
SHEET NUMBER: TC-01

POLAFR01_04/2023_BWD

W20-1	G20-2	R3-7	R3-4	R9-3	R49(CA)	R26A(CA)	SG61C(CA)
ROAD WORK AHEAD	END ROAD WORK	RIGHT LANE MUST TURN RIGHT			NO PED CROSSING / USE CROSSWALK	NO PARKING ANY TIME	ENTERING TSUNAMI HAZARD ZONE

GENERAL TRAFFIC CONTROL NOTES

1. TRAFFIC CONTROL SHALL BE IN ACCORDANCE WITH THE LATEST EDITION OF THE WORK AREA TRAFFIC CONTROL HANDBOOK (WATCHBOOK).
2. MAINTAIN A MINIMUM OF ONE (1) LANE IN EACH DIRECTION.TRAFFIC CONTROL SHALL BE IN ACCORDANCE WITH THE LATEST EDITION OF THE CALIFORNIA MANUAL ON UNIFORM TRAFFIC CONTROL DEVICES (MUTCD).
3. TRAFFIC CONTROL PLANS SHALL BE SUBMITTED TEN (10) WORKING DAYS IN ADVANCE OF SCHEDULED WORK FOR REVIEW AND WRITTEN APPROVAL. TRAFFIC CONTROL PLANS SHALL BE SIGNED BE A REGISTERED CIVIL AND/OR TRAFFIC ENGINEER. NO FIELD WORK SHALL BEGIN UNTIL TRAFFIC CONTROL PLAN IS APPROVED BY ENGINEER.
4. DO NOT INTERRUPT LOCAL STREET TRAFFIC AT ANY TIME. COORDINATE WORK WITH ENGINEER. SEE COORDINATION SECTION OF SPECIFICATIONS.
5. SUBMIT A RAILROAD WORK PLAN TO ENGINEER FOR WRITTEN APPROVAL, PRIOR TO ANY WORK BEING PERFORMED WITHIN TWENTY-FIVE (25) FEET FROM THE CENTERLINE OF LIVE TRACKS. RELATED PERMITS SHALL BE OBTAINED PRIOR TO SUBMITTING THE WORK PLAN. SEE COORDINATION SECTION OF SPECIFICATIONS.
6. PROVIDE A PHL TRAINED FLAGPERSON WHEN WORKING WITHIN TWENTY-FIVE (25) FEET OF LIVE TRACKS.

LEGEND

- EXISTING STRIPING & MARKING TO REMAIN
- EXISTING STRIPING & MARKINGS TO BE REMOVED
- PROPOSED STRIPING & MARKINGS
- EXISTING SIGNS
- PROPOSED TEMPORARY SIGN
- SIGNS TO BE REMOVED
- (S) SIGNALIZED INTERSECTION
- WORK AREA
- 20' TEMPORARY BARRIER SYSTEM (INTERCONNECTED) (CALTRANS ST
- TEMPORARY CRASH CUSHION (TL-3)
- PROPOSED TRAFFIC CONE
- PROPOSED 30" EPOXIED SURFACE MOUNT DELINEATOR WITH REFLECTIVE SHEETS
- R/C EXISTING RED CURB

STAGE CONSTRUCTION NOTES

1. INSTALL TEMP BARRIER SYSTEM
2. INSTALL TEMP CRASH CUSHION TL-3
3. INSTALL CHANNELIZER (SURFACE MOUNTED)
4. INSTALL TEMP SIGN

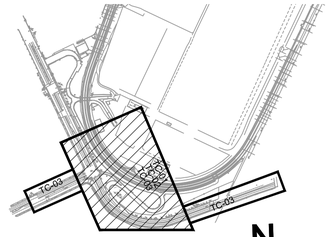

KEY MAP

N

1TC-02 / TC-02 PLAN
SCALE: 1" = 40'

40' 0'-0" 40' 80'
1" = 40'

SHEET ____ OF 400

NO.	DATE	DRAWN	REVISIONS -	CHK'D	APP'D
			NOT FOR CONSTRUCTION		

NO.	DATE	DRAWN	REVISIONS -	CHK'D	APP'D
			80% DESIGN		

Jacobs
2600 MICHELSON DRIVE, SUITE 500
IRVINE, CA 92612
T: (949) 224-7500
F: (949) 224-7501

SCALE: 1"=40'
DRAWN: A. DEPRA
CHECKED: A. BENCINCI
DESIGNED: A. CABRERA VENTURA
ENGINEER / ARCHITECT

TERMINAL ISLAND GRADE SEPARATION

TRAFFIC CONTROL PLAN - 2

THE PORT OF LOS ANGELES
ENGINEERING DIVISION
425 S. PALOS VERDES STREET SAN PEDRO CA 90731-3309

DRAWING NUMBER 1-3497
SHEET NUMBER TC-02

POLAPROT_04.0223_BWD

STAGE CONSTRUCTION NOTES

1. INSTALL TEMP BARRIER SYSTEM
2. INSTALL TEMP CRASH CUSHION TL-3
4. INSTALL TEMP SIGN
5. INSTALL TEMP CONES
6. INSTALL ARROW BOARD

ROAD WORK AHEAD	END ROAD WORK	LANE CLOSED		RIGHT LANE CLOSED AHEAD	RIGHT LANE MUST TURN RIGHT			NO PED CROSSING / USE CROSSWALK	NO PARKING ANY TIME	ENTERING TSUNAMI HAZARD ZONE
W20-1	G20-2	C30 (CA)	W4-2(CA)	C20(CA)(RT)	R3-7	R3-4	R9-3	R49(CA)	R26A(CA)	SG61C(CA)

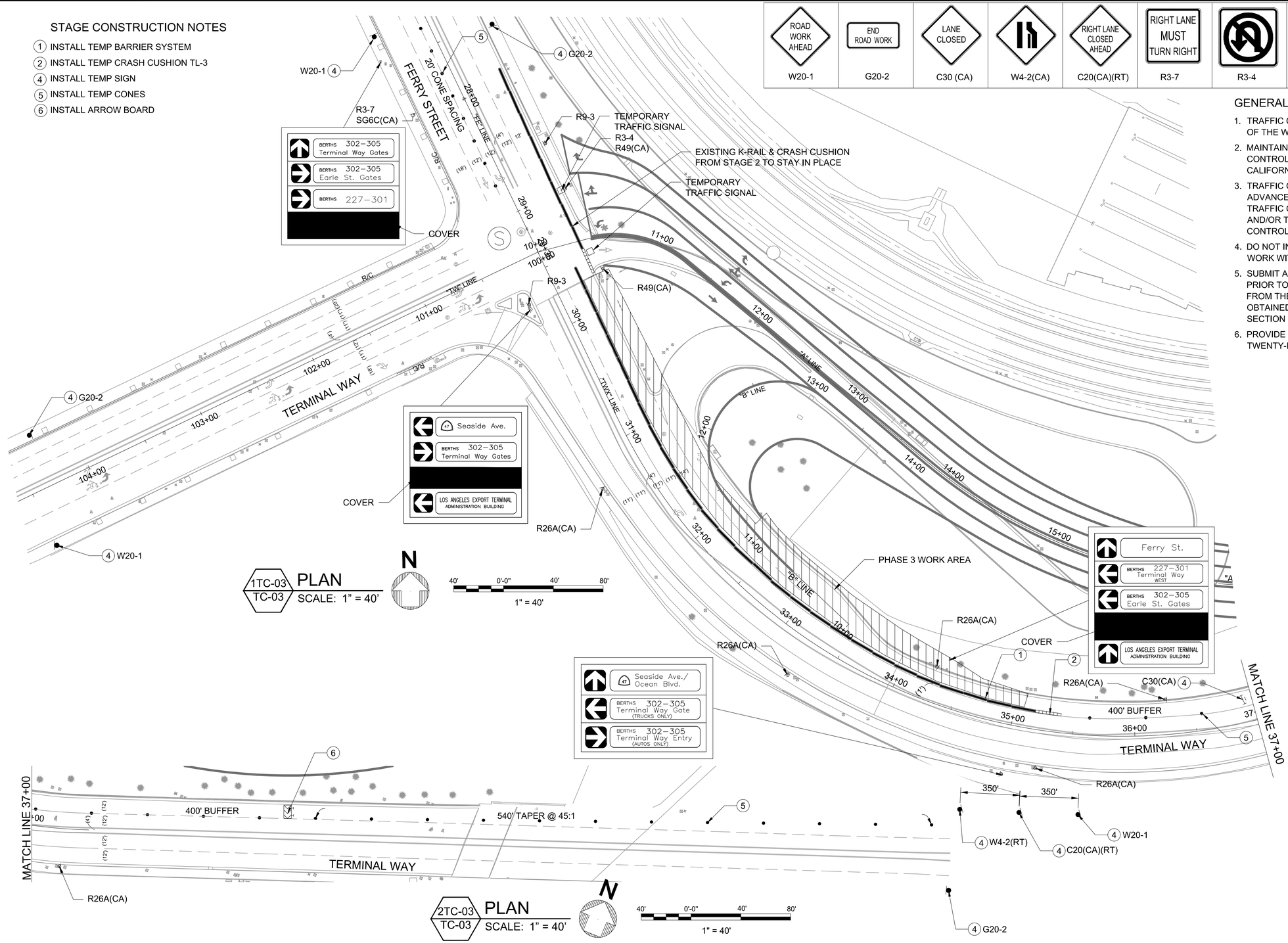

1TC-03 / TC-03 PLAN SCALE: 1" = 40'

2TC-03 / TC-03 PLAN SCALE: 1" = 40'

GENERAL TRAFFIC CONTROL NOTES

1. TRAFFIC CONTROL SHALL BE IN ACCORDANCE WITH THE LATEST EDITION OF THE WORK AREA TRAFFIC CONTROL HANDBOOK (WATCHBOOK).
2. MAINTAIN A MINIMUM OF ONE (1) LANE IN EACH DIRECTION.TRAFFIC CONTROL SHALL BE IN ACCORDANCE WITH THE LATEST EDITION OF THE CALIFORNIA MANUAL ON UNIFORM TRAFFIC CONTROL DEVICES (MUTCD).
3. TRAFFIC CONTROL PLANS SHALL BE SUBMITTED TEN (10) WORKING DAYS IN ADVANCE OF SCHEDULED WORK FOR REVIEW AND WRITTEN APPROVAL. TRAFFIC CONTROL PLANS SHALL BE SIGNED BE A REGISTERED CIVIL AND/OR TRAFFIC ENGINEER. NO FIELD WORK SHALL BEGIN UNTIL TRAFFIC CONTROL PLAN IS APPROVED BY ENGINEER.
4. DO NOT INTERRUPT LOCAL STREET TRAFFIC AT ANY TIME. COORDINATE WORK WITH ENGINEER. SEE COORDINATION SECTION OF SPECIFICATIONS.
5. SUBMIT A RAILROAD WORK PLAN TO ENGINEER FOR WRITTEN APPROVAL, PRIOR TO ANY WORK BEING PERFORMED WITHIN TWENTY-FIVE (25) FEET FROM THE CENTERLINE OF LIVE TRACKS. RELATED PERMITS SHALL BE OBTAINED PRIOR TO SUBMITTING THE WORK PLAN. SEE COORDINATION SECTION OF SPECIFICATIONS.
6. PROVIDE A PHL TRAINED FLAGPERSON WHEN WORKING WITHIN TWENTY-FIVE (25) FEET OF LIVE TRACKS.

LEGEND

- EXISTING STRIPING & MARKING TO REMAIN
- EXISTING STRIPING & MARKINGS TO BE REMOVED
- PROPOSED STRIPING & MARKINGS
- EXISTING SIGNS
- PROPOSED TEMPORARY SIGN
- SIGNS TO BE REMOVED
- SIGNALIZED INTERSECTION
- WORK AREA
- 20' TEMPORARY BARRIER SYSTEM (INTERCONNECTED)
- TEMPORARY CRASH CUSHION (TL-3)
- PROPOSED TRAFFIC CONE
- PROPOSED 30" EPOXIED SURFACE MOUNT DELINEATOR WITH REFLECTIVE SHEETS
- R/C EXISTING RED CURB

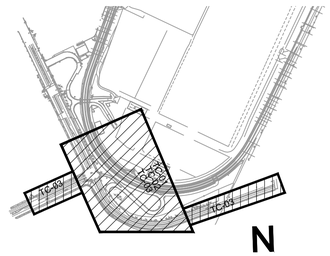

SHEET ____ OF 400

NO.	DATE	DRAWN	REVISIONS -	CHK'D	APP'D
			NOT FOR CONSTRUCTION		

NO.	DATE	DRAWN	REVISIONS -	CHK'D	APP'D
			80% DESIGN		

Jacobs
3600 WILSHIRE BLVD., SUITE 500
LOS ANGELES, CA 90010
T: (949) 224-7500
F: (949) 224-7501

SCALE: 1"=40'
DRAWN: A. DEPRA
CHECKED: A. BENCINCI
DESIGNED: A. CABRERA VENTURA
ENGINEER / ARCHITECT

TERMINAL ISLAND GRADE SEPARATION

TRAFFIC CONTROL PLAN - 3

THE PORT OF LOS ANGELES
ENGINEERING DIVISION
425 S. PALOS VERDES STREET SAN PEDRO CA 90731-3309

DRAWING NUMBER: 1-3497
SHEET NUMBER: TC-03

POLAPR01_040320_BWD